EDBCSXA064
13243780

Operating Instructions

ECS

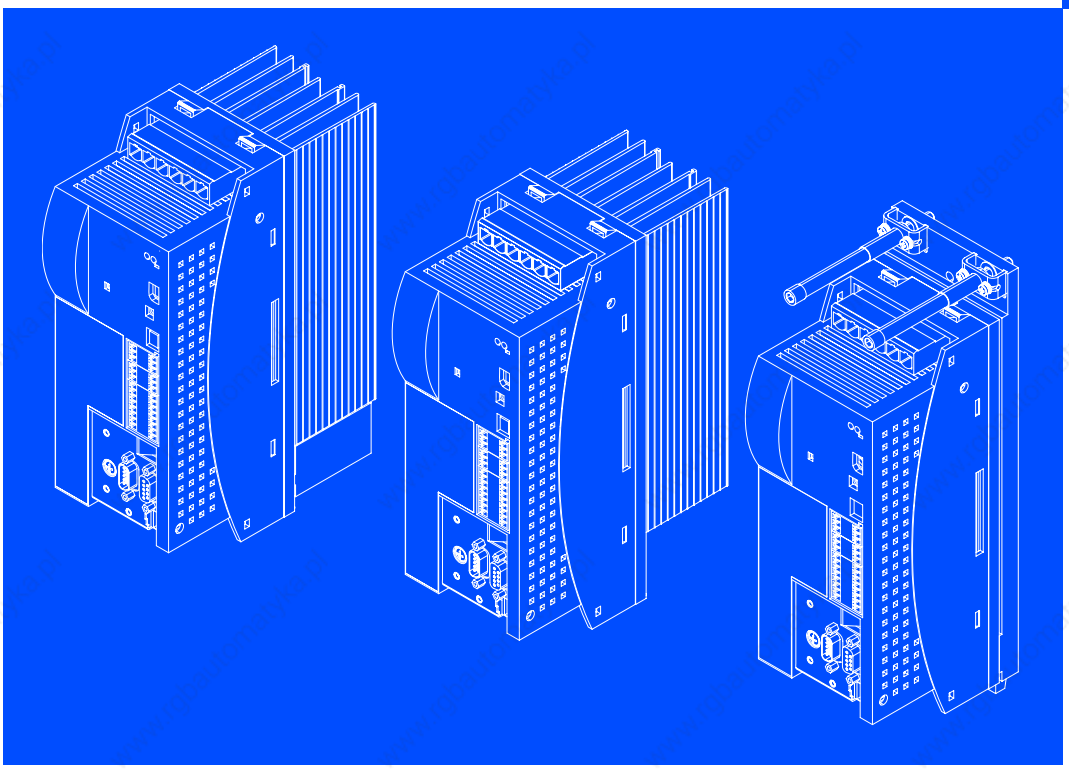

ECSEAxxx / ECSDAxxx / ECSCAxxx

Axis module – ”Application”

Lenze

Please read these instructions before you start working!
Follow the enclosed safety instructions.

These Instructions are valid for ECSxA... axis modules as of version:

	①									
ECS	x	A	xxx	x	4	x	xxx	XX	XX	XX

Device type

Design

E = standard panel-mounted unit, IP20
D = push-through technique (thermally separated)
C = cold-plate technique

Application

A = ”Application”

Peak current

004 = 4 A	032 = 32 A
008 = 8 A	048 = 48 A
016 = 16 A	064 = 64 A

Fieldbus interface

C = CAN system bus

Voltage class

4 = 400 V/500 V

Technical version

B = Standard
I = For IT systems

Variant

Hardware version

1A or higher

Version of operating software (B-SW)

8.0 or higher

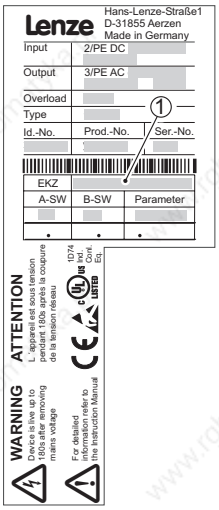

Tip!

Current documentation and software updates concerning Lenze products can be found on the Internet in the ”Services & Downloads” area under

http://www.Lenze.com

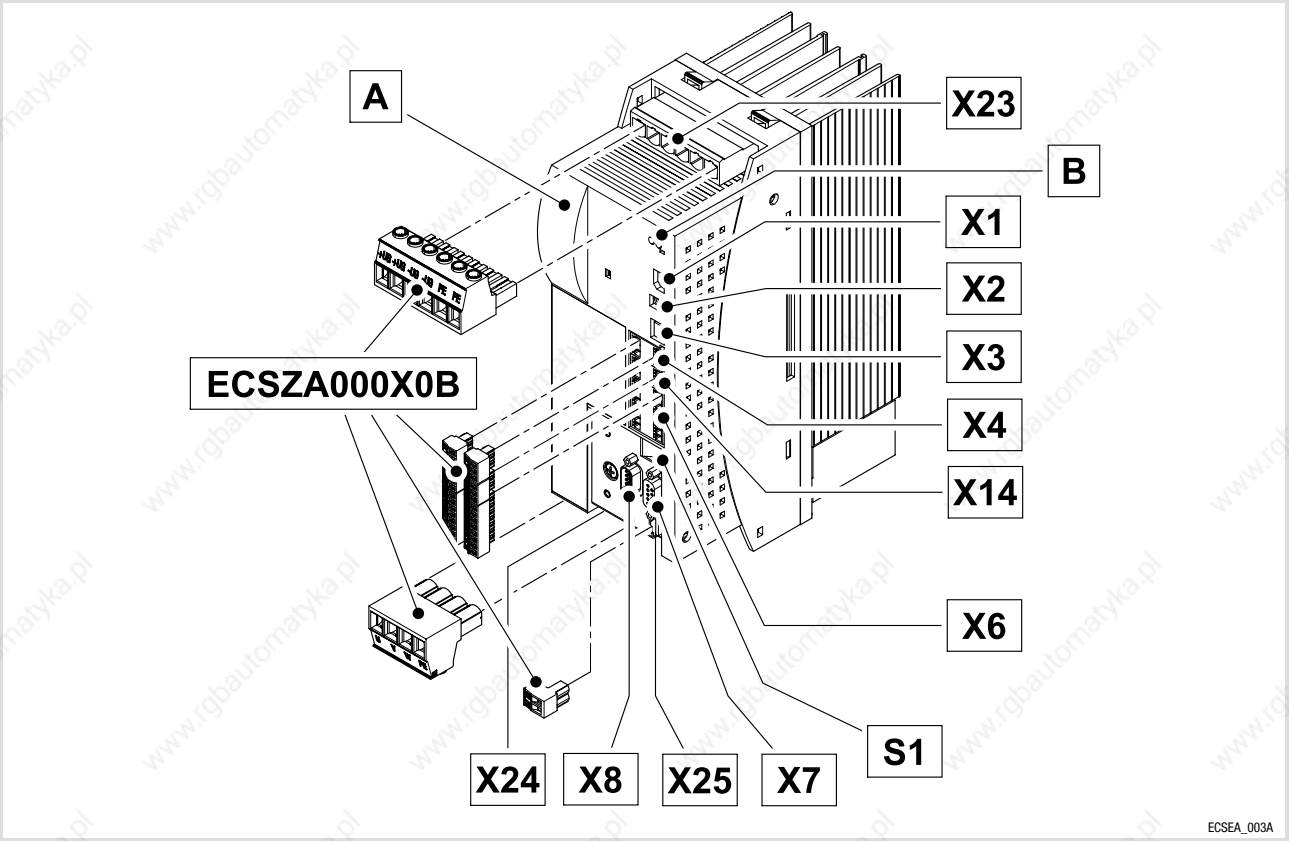
A
X23
B
X1
X2
X3
X4
X14
X6
S1
ECSZA000X0B
X24
X8
X25
X7
ECSEA_003A

Scope of supply

Position	Description	Quantity
A	ECS☐A... axis module	1
	Accessory kit with fixing material corresponding to the design (☐): ● ”E” - standard panel-mounted unit ● ”D” - push-through technique ● ”C” - cold-plate technique	1
	Mounting Instructions	1
	Drilling jig	1
	Functional earth conductor (only ECS**D**A...)	1

Note!

The **ECSZA000X0B** connector set must be ordered separately.

Connections and interfaces

Position	Description	Detailed information
X23	Connections ● DC-bus voltage ● PE	📖 56
B	LEDs: Status and error display	
x1	Automation interface (AIF) for ● operating module (keypad XT) ● Communication module	📖 78
X2	PE connection of AIF	
X3	Configuration of analog input	📖 68
X4	CAN connection ● System bus (CAN)	📖 79
X14	CAN-AUX connection ● System bus (CAN)	
X6	Connections ● Low-voltage supply ● Digital inputs and outputs ● Analog input ● ”Safe torque off” (formerly ”safe standstill”)	📖 64 📖 67 📖 68 📖 69
S1	DIP switch ● CAN/CANaux node address ● CAN baud rate	📖 161
X7	Resolver connection	📖 86
X8	Encoder connection ● Incremental encoder (TTL encoder) ● Sin/cos encoder	📖 87
X25	Connection of brake control	📖 61
X24	Motor connection	📖 60

Status displays

LED		Operating state	Check test
Red	Green		
Off	On	Controller enabled, no fault	
Off	Blinking	Controller inhibited (CINH), switch-on inhibit	Code C0183
Blinking	Off	Trouble/fault (TRIP) is active	Code C0168/1
Blinking	On	Warning/FAIL-QSP is active	Code C0168/1

1 Preface and general information

1.1 About use these Operating Instructions

These Operating Instructions will assist you in connecting and commissioning the ECSxA... axis modules.

They contain safety instructions which must be observed!

All persons working on and with the ECSxA... axis modules must have the Operating Instructions available and must observe the information and notes relevant for their work.

The Operating Instructions must always be in a complete and perfectly readable state.

1.1.1 Conventions used in this Manual

This Manual uses the following conventions to distinguish between different types of information:

Information type	Print (in the descriptive text)	Example
System block name	**bold**	The SB **DIGITAL_IO**...
System block variable identifier	*italics*	The input *DIGIN_bIn1_b*...

Further information ...

about the conventions used for the Lenze variable identifiers, system blocks, function blocks, and functions can be found in the appendix of the DDS online documentation ”Introduction to IEC 61131-3 programming”.

The compliance with these conventions ensures uniform and universal labelling and makes reading PLC programs easier.

1.1.2 Terminology used

Term	In the following text used for
Power supply module	ECSxE...power supply module
ECSxE...	Any power supply module of the ECS series
Capacitor module	ECSxK...capacitor module
ECSxK...	Any capacitor module of the ECS series
Axis module Controller	ECSxA... axis module
ECSxS... ECSxP... ECSxM... ECSxA ...	Any axis module of the ECS series: ● ECSxS... ”Speed and Torque” application ● ECSxP... ”Posi and Shaft” application ● ECSxM... ”Motion” application ● ECSxA... - ”Application”
Drive system	Drive systems with: ● ECSxS... / ECSxP... / ECSxM... / ECSxA... axis modules ● ECSxE... power supply modules ● ECSxK... capacitor modules ● Other Lenze drive components
24 V supply Low-voltage supply	Voltage supply ● of the control card, voltage range 20 ... 30 V DC (±0 V) ● of the ”safe torque off”(formerly ”safe standstill”), voltage range 18 ... 30 V DC (±0 V) ● of the motor holding brake, voltage range 23 ... 30 V DC (±0 V)
AIF	**A**utomation **I**nter**F**ace
Cxxxx/y	Subcode y of code Cxxxx (e. g. C0470/3 = subcode 3 of code C0470)
Xk/y	Terminal y on plug connector Xk (e. g. X6/B+ = terminal B+ on plug connector X6)
DDS	Drive PLC Developer Studio
FB	Function block
GDC	Global Drive Control (parameter setting program from Lenze)
SB	System block
System bus (CAN)	Lenze standard bus system based on *CANopen* for ● communication with a higher-level master system or further controllers ● parameter setting and diagnostics.

1.1.3 Structure of the system block descriptions

All system block descriptions contained in this Manual have the same structure:

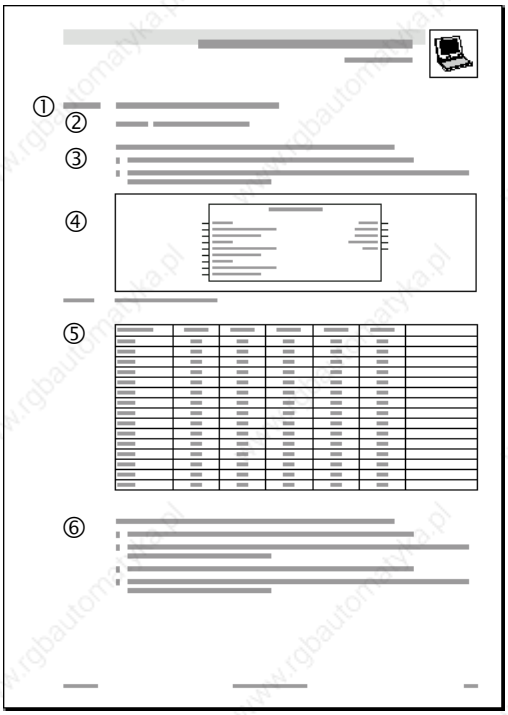

①	Headline with SB identifier
②	SB function and node number
③	Brief description of the SB and its most important features
④	Graph including all corresponding system variables ● Input variables ● Output variables
⑤	Table giving information about input and output variables: ● Identifier ● Data type ● Signal type ● Address ● Display code ● Display format ● Information
⑥	● Detailed functional description of the SB ● Code description

1.2 Features of the ECSxA axis module

► Safety function ”safe torque off” (formerly ”safe standstill”)

► Double CAN ON BOARD:
– CAN bus interface X4 ”CAN” (PDO1, sync-based)
– CAN bus interface X14 ”CAN-AUX”

► Supported feedback systems:
– Resolver with and without position storage
– Encoder (incremental encoder (TTL encoder), sin/cos encoder)

► Commissioning and parameter setting with the Lenze parameter setting and operating program ”Global Drive Control” (GDC)

1.3 Scope of supply

The scope of supply of the ECSxA... axis module includes:

- Standard device
- Accessory kit with fixings according to the design:
  – ”E” - panel-mounted device
  – ”D” - push-through technique
  – ”C” - cold-plate technique
- Mounting Instructions
- Drilling jig
- Functional earth conductor (only ECS**D**A...)

Accessories

The appendix includes information on the following accessories: (📖 428).

- Connector sets for
  – power supply modules: ECSZE000X0B
  – capacitor modules: ECSZK000X0B
  – axis modules: ECSZA000X0B
- ECSZS000X0B001 shield mounting kit (EMC accessories)
- Communication modules for the automation interface (AIF)
- ECSxE...power supply module
- ECSxK... capacitor module
- Brake resistors
- Mains fuses
- Mains chokes
- RFI filters
- Motors

1.4 Legal regulations

Identification	**Nameplate**	**CE identification**	**Manufacturer**
	Lenze controllers are unambiguously designated by the contents of the nameplate.	Conforms to the EC Low-Voltage Directive	Lenze Drive Systems GmbH PO box 10 13 52 D-31763 Hameln
Application as directed	**ECSxA... axis modules** ● must only be operated under the conditions prescribed in these instructions. ● are components – for open and closed loop control of variable speed drives with PM synchronous motors and asynchronous motors. – for installation in a machine. – for assembly with other components to form a machine. ● are electrical equipment for the installation in control cabinets or similar closed operating areas. ● comply with the protective requirements of the EC Low-Voltage Directive. ● are not machines for the purpose of the EC Machinery Directive. ● are not to be used as domestic appliances, but for industrial purposes only. **Drive systems with ECSxA... axis modules** ● comply with the EC Directive "Electromagnetic compatibility" if they are installed according to the guidelines of CE-typical drive systems. ● can be used – at public and non-public mains. – in industrial premises. ● The user is responsible for the compliance of his application with the EC directives. **Any other use shall be deemed inappropriate!**		
Liability	● The information, data and notes in these instructions met the state of the art at the time of printing. Claims on modifications referring to axis modules and components which have already been supplied cannot be derived from the information, illustrations and descriptions given in these instructions. ● The specifications, processes and circuitry described in these instructions are for guidance only and must be adapted to your own specific application. Lenze does not take responsibility for the suitability of the process and circuit proposals. ● Lenze does not accept any liability for damages and failures caused by: – Disregarding the Operating Instructions – Unauthorised modifications to the axis module – Operating errors – Improper working on and with the axis module		
Warranty	● Terms of warranty: See terms of sales and delivery of Lenze Drive Systems GmbH. ● Warranty claims must be made to Lenze immediately after detecting the deficiency or fault. ● The warranty is void in all cases where liability claims cannot be made.		

1.5 System block introduction

Lenze follows the principle of describing controller functions with the aid of function blocks (FBs). This principle can also be found in the IEC 61131-3 standard.

- Functions which can be used as software functions in projects are stored in function libraries as **function blocks** or **functions**.
- In addition, quasi-hardware functions are available as **system blocks** (SBs).

1.5.1 System blocks – principle

- System blocks partially activate real hardware.
- SBs are assigned/identified by node numbers. (📖 19)
- Access to the inputs/outputs of the SBs is effected via:
  – System variables (📖 20)
  – Absolute memory addresses (📖 21)
- Inputs/outputs are always classified from the program's point of view. (📖 21)
- Required SBs must be explicitly linked to the project via the control configuration of the DDS. (📖 23)

The system-block principle can be explained by means of a PLC system in a rack:

- The rack contains the CPU, digital I/Os, analog I/Os, counter card, positioning card, etc. as additional cards:

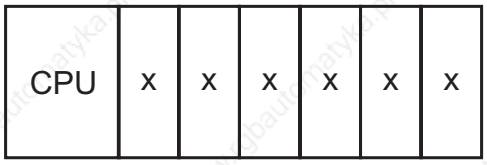

x = Additional cards

- The CPU can directly access the additional cards and process the resulting information.
- Additional cards have fixed addresses for access.

Tip!

In case of the ECSxA... axis modules, the system blocks correspond to these attachment cards!

System blocks therefore are specific (hardware) function blocks which are firmly integrated into the runtime system of the ECSxA... axis module.

1.5.2 Node numbers

The system blocks feature the following node numbers:

Node number	System block	Notes
1	DIGITAL_IO	Digital inputs/outputs
11	ANALOG1_IO	Analog input 1
21	DFIN_IO_DigitalFrequency	Digital frequency input
22	DFOUT_IO_DigitalFrequency	Digital frequency output
31	CAN1_IO	System bus (CAN)
32	CAN2_IO	
33	CAN3_IO	
34	CANaux1_IO	System bus (CAN-AUX)
35	CANaux2_IO	
36	CANaux3_IO	
41	AIF1_IO_AutomationInterface	Automation interface (AIF)
42	AIF2_IO_AutomationInterface	
43	AIF3_IO_AutomationInterface	
60	OSC_Oscilloscope	Oscilloscope function
101	CAN_Management	System bus (CAN) management
102	CAN_Synchronization	System bus (CAN) synchronisation
111	CANaux_Management	System bus (CAN-AUX) management
121	DCTRL_DriveControl	Device control
131	MCTRL_MotorControl	Motor control
141	FCODE_FreeCodes	Free codes
151	SYSTEM_FLAGS	System flags
161	AIF_IO_Management	Automation interface management
171	VAR_PERSISTENT	Persistent variables

The node number is part of the absolute SB address. (📖 21)

1.5.3 Access via system variables

If you have integrated a system block into the system configuration of the DDS, you can use its system variables within your project.

You can call up the input assistance in the editors of the DDS via **<F2>**, among other things listing all the system variables that are provided:

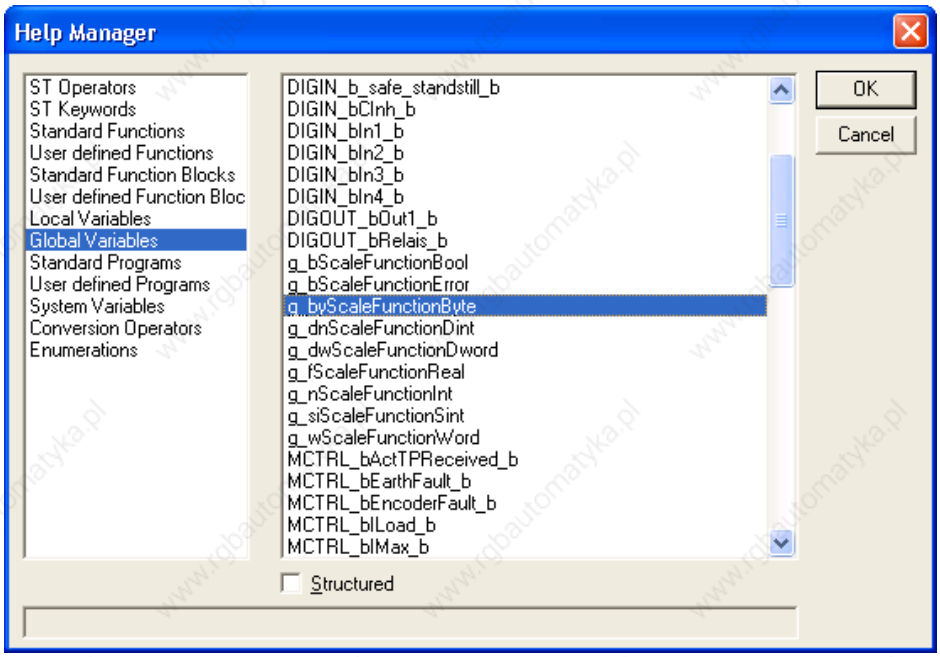

In this Manual, the system variables can be retrieved in the system variable table of the corresponding system block.

Example: Table with the inputs of the SB **Inputs_Digital** of the ECSxA... axis module

Variable	Data type	Signal type	Address	Display code	Display format	Notes
DIGIN_bCInh_b	BOOL	binary	%IX1.0.0	–	–	Controller inhibit – takes direct effect on the device control DCTRL.
DIGIN_bIn1_b			%IX1.0.1	C0443	bin	
DIGIN_bIn2_b			%IX1.0.2			
DIGIN_bIn3_b			%IX1.0.3			
DIGIN_bIn4_b			%IX1.0.4			
DIGIN_b_safe_standstill_b			%IX1.0.5			”Safe torque off” (former ”safe standstill”)

1.5.4 Access via absolute addresses

You can also access the inputs and outputs of the system blocks via absolute addresses according to standard IEC 61131-3:

For inputs:	For outputs:	
%IXa.b.c	%QXa.b.c	a = node number b = word address c = bit address

In this Manual, the absolute addresses can be retrieved in the system variable table of the corresponding system block.

Example: Table with the inputs of the SB **Inputs_Digital** of the ECSxA... axis module

Variable	Data type	Signal type	Address	Display code	Display format	Notes
DIGIN_bCInh_b	BOOL	binary	**%IX1.0.0**	–	–	Controller inhibit – takes direct effect on the device control DCTRL.
DIGIN_bIn1_b			**%IX1.0.1**	C0443	bin	
DIGIN_bIn2_b			**%IX1.0.2**			
DIGIN_bIn3_b			**%IX1.0.3**			
DIGIN_bIn4_b			**%IX1.0.4**			
DIGIN_b_safe_standstill_b			**%IX1.0.5**			”Safe torque off” (former ”safe standstill”)

1.5.5 Definition of the inputs/outputs

For connecting the application program with the hardware, system blocks are connected with program organisation units (POUs):

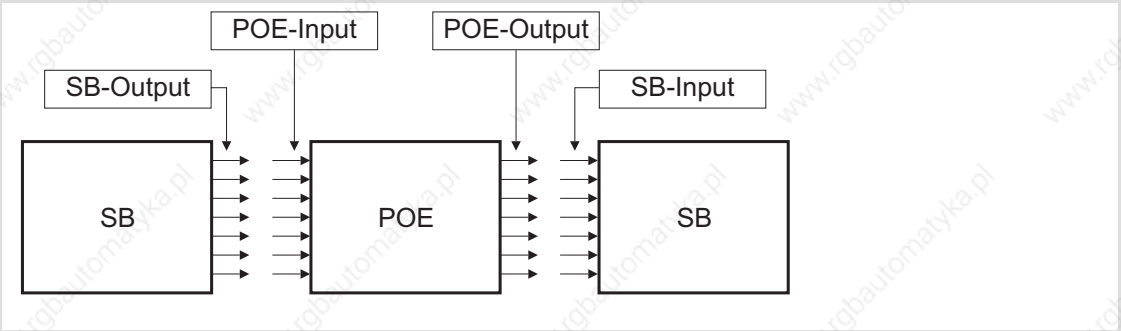

Fig. 1-1 Plan: Connecting system blocks to a program organisation unit (POU)

Note!

Inputs and outputs are always classified from the program’s point of view.

- ► Logical SB inputs are always hardware-side outputs of the ECSxA axis... module
- ► Logical SB outputs are always hardware-side inputs of the ECSxA axis... module

Example:

Use of the system blocks **Inputs_Digital** and **Outputs_Digital**

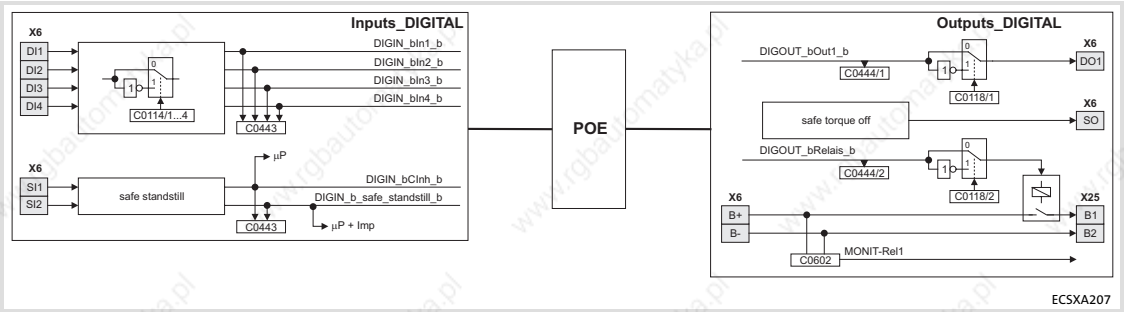

Fig. 1-2 Plan: connecting the system blocks ”Inputs_Digital” and ”Outputs_Digital”

If you want to use digital input 1 and digital output 1, carry out the following steps:

1. Explicitly integrate the SBs **Inputs_Digital** and **Outputs_Digital** into the DDS control configuration. (📖 23)
2. For access to digital input 1:
   – Assign the system variable *DIGIN_bIn1_b* to a POU variable.
3. For access to digital output 1:
   – Assign the system variable *DIGOUT_bOut1_b* to a POU variable.

Note!

According to the IEC 61131-3 standard the system variables *DIGIN_bIn1_b* and *DIGOUT_bOut1_b* may generally only be used once.

The use of one system variable in several POUs must be carried out via a copy (as global variable).

1.5.6 Integrating system blocks into the DDS

The system blocks required have to be integrated explicitly into the project in the DDS via the control configuration.

- ► The control configuration is placed as an object in the **Resources** tab in the *Object organiser*.
- ► The control configuration lists all inputs and outputs including the identifiers of the corresponding system variable, the absolute address and the data type of the system variable for every linked SB.

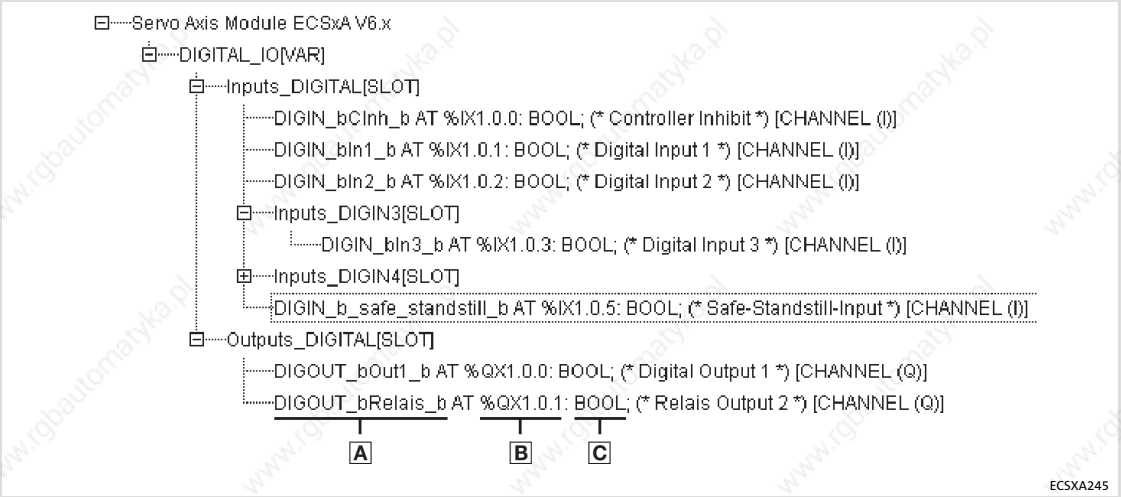

Fig. 1-3 Example: Control configuration including the SBs ”Inputs_DIGITAL” and ”Outputs_DIGITAL”

A Identifier of the system variable
B Absolute address
C Data type of the system variable

Tip!

The control configuration can be accessed using the right mouse key. A context menu helps you to add and delete SBs.

1.5.7 Signal types and scaling

A signal type can be assigned to most inputs and outputs of the Lenze function blocks/system blocks. The following signal types are distinguished:

- ► digital and analog signals
- ► position and speed signals

The identifier of the corresponding input/output variable has an ending (starting with an underscore). It indicates the signal type.

Signal		Ending	Memory	Scaling (external size ≡ internal size)
Type	Symbol			
Analog	H/L	_a (analog)	16 Bit1	100 % ≡ 16384
Digital	Disp	_b (binary)	1 bit	0 ≡ FALSE; 1 ≡ TRUE
Angular difference or speed (rot.)	Δ	_v (velocity)	16 Bit1	15000 rpm ≡ 16384
		● Angular difference/speed ref. to 1 ms ● Normalisation example: $Speed\ (on\ motor\ side) = 15000\ [rpm] = \frac{15000}{60\ [s]}$ $1\ motor\ revolution = 65536\ [inc]$ $Variable\ value\ (...\_v) = \frac{15000}{60000\ [ms]} \cdot 65536\ [inc] = 16384 \left[\frac{inc}{ms}\right]$		
Angle or position	▲	_p (position)	32 Bit	1 motor revolution ≡ 65536
		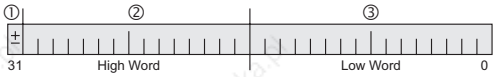 ① Direction (0 ≡ clockwise rotation; 1 ≡ counter-clockwise rotation) ② No. of motor revolutions (0 ... 32767) ③ Angle or position (0 ... 65535)		

Due to their scaling, analog signals have an asymmetrical resolution range (-200 % ... +199.99 %):

External:	-200 %	-100 %	0 %	+100 %	+199.99 %
Internal:	-32768	-16384	0	+16384	+32767

2 Safety instructions

2.1 General safety and application notes for Lenze controllers

(in accordance with Low-Voltage Directive 2006/95/EC)

For your personal safety

Depending on their degree of protection, some parts of the Lenze controllers (frequency inverters, servo inverters, DC speed controllers) and their accessory components can be live, moving and rotating during operation. Surfaces can be hot.

Non-authorised removal of the required cover, inappropriate use, incorrect installation or operation, creates the risk of severe injury to persons or damage to material assets.

For more information, please see the documentation.

High amounts of energy are produced in the controller. Therefore it is required to wear personal protective equipment (body protection, headgear, eye protection, ear protection, hand guard).

All operations concerning transport, installation, and commissioning as well as maintenance must be carried out by qualified, skilled personnel (IEC 364 or CENELEC HD 384 or DIN VDE 0100 and IEC report 664 or DIN VDE 0110 and national regulations for the prevention of accidents must be observed).

According to this basic safety information, qualified, skilled personnel are persons who are familiar with the assembly, installation, commissioning, and operation of the product and who have the qualifications necessary for their occupation.

Application as directed

Controllers are components which are designed for installation in electrical systems or machines. They are not to be used as domestic appliances, but only for industrial purposes according to EN 61000-3-2.

When controllers are installed into machines, commissioning (i.e. starting of the operation as directed) is prohibited until it is proven that the machine complies with the regulations of the EC Directive 98/37/EC (Machinery Directive); EN 60204 must be observed.

Commissioning (i.e. starting of the operation as directed) is only allowed when there is compliance with the EMC Directive (2004/108/EC).

The controllers meet the requirements of the Low-Voltage Directive 2006/95/EC. The harmonised standard EN 61800-5-1 applies to the controllers.

The technical data and supply conditions can be obtained from the nameplate and the documentation. They must be strictly observed.

Warning: Controllers are products which can be installed in drive systems of category C2 according to EN 61800-3. These products can cause radio interferences in residential areas. In this case, special measures can be necessary.

Transport, storage

Please observe the notes on transport, storage, and appropriate handling.

Observe the climatic conditions according to the technical data.

Installation

The controllers must be installed and cooled according to the instructions given in the corresponding documentation.

Ensure proper handling and avoid excessive mechanical stress. Do not bend any components and do not change any insulation distances during transport or handling. Do not touch any electronic components and contacts.

Controllers contain electrostatic sensitive devices which can easily be damaged by inappropriate handling. Do not damage or destroy any electrical components since this might endanger your health!

Electrical connection

When working on live controllers, observe the applicable national regulations for the prevention of accidents (e.g. VBG 4).

The electrical installation must be carried out according to the appropriate regulations (e.g. cable cross-sections, fuses, PE connection). Additional information can be obtained from the documentation.

This documentation contains information on installation in compliance with EMC (shielding, earthing, filters, and cables). These notes must also be observed for CE-marked controllers. The manufacturer of the system is responsible for compliance with the limit values demanded by EMC legislation. The controllers must be installed in housings (e.g. control cabinets) to meet the limit values for radio interferences valid at the site of installation. The housings must enable an EMC-compliant installation. Observe in particular that e.g. the control cabinet doors have a circumferential metal connection to the housing. Reduce housing openings and cutouts to a minimum.

Lenze controllers can cause a direct current in the protective conductor. If a residual current device (RCD) is used as a protective means in case of direct or indirect contact, only a residual current device (RCD) of type B may be used on the current supply side of the controller. Otherwise, another protective measure such as separation from the environment through double or reinforced insulation or disconnection from the mains by means of a transformer must be applied.

Operation

If necessary, systems including controllers must be equipped with additional monitoring and protection devices according to the valid safety regulations (e.g. law on technical equipment, regulations for the prevention of accidents). The controllers can be adapted to your application. Please observe the corresponding information given in the documentation.

After the controller has been disconnected from the supply voltage, all live components and power connections must not be touched immediately because capacitors can still be charged. Please observe the corresponding stickers on the controller.

All protection covers and doors must be shut during operation.

Notes for UL-approved systems with integrated controllers: UL warnings are notes that only apply to UL systems. The documentation contains special UL notes.

Safety functions

Special controller variants support safety functions (e.g. ”safe torque off”, formerly ”safe standstill”) according to the requirements of Appendix I No. 1.2.7 of the EC Directive ”Machinery” 98/37/EC, EN 954-1 Category 3 and EN 1037. Strictly observe the notes on the safety functions given in the documentation for the respective variants.

Maintenance and servicing

The controllers do not require any maintenance if the prescribed operating conditions are observed.

If the ambient air is polluted, the cooling surfaces of the controller may become dirty or the air vents may be obstructed. Therefore, clean the cooling surfaces and air vents periodically under these operating conditions. Do not use sharp or pointed tools for this purpose!

Disposal

Recycle metal and plastic materials. Ensure professional disposal of assembled PCBs.

The product-specific safety and application notes given in these instructions must be observed!

2.2 Residual hazards

Protection of persons

- ► Before working on the axis module, check that no voltage is applied to the power terminals, because
  - – the power terminals +UG, -UG, U, V and W remain live for at least 3 minutes after mains switch-off.
  - – the power terminals +UG, -UG, U, V and W remain live when the motor is stopped.
- ► The heatsink has an operating temperature of > 70 °C:
  - – Direct skin contact with the heatsink results in burns.
- ► The discharge current to PE is > 3.5 mA AC or. > 10 mA DC.
  - – EN 61800-5-1 requires a fixed installation.
  - – The PE connection must comply with EN 61800-5-1.
  - – Comply with the further requirements of EN 61800-5-1 for high discharge currents!

Device protection

- ► All pluggable connection terminals must only be connected or disconnected when no voltage is applied!
- ► The power terminals +UG, -UG, U, V, W and PE are not protected against polarity reversal.
  - – When wiring, observe the polarity of the power terminals!
- ► Power must not be converted until all devices of the power system are ready for operation. Otherwise, the input current limitation may be destroyed.

Frequent mains switching (e.g. inching mode via mains contactor) can overload and destroy the input current limitation of the axis module, if

- ► the axis module is supplied via the ECSxE supply module and the input current limitation is activated depending on the DC-bus voltage (C0175 = 1 or 2).
- ► the axis module is not supplied via a supply module delivered by Lenze.
- ► the low-voltage supply (24 V) is switched off.

For this reason allow a break of at least three minutes between two starting operations!

Use the safety function ”Safe torque off” (STO) for frequent disconnections for safety reasons.

Motor protection

- ► Only use motors with a minimum insulation resistance of û = 1.5 kV, min. du/dt = 5 kV/µs.
  – Lenze motors meet these requirements.
- ► When using motors with an unknown insulation resistance, please contact your motor supplier.
- ► Some settings of the axis module lead to an overheating of the connected motor, e.g. longer operation of self-ventilated motors with low speeds.
- ► Use PTC thermistors or thermostats with PTC characteristic for motor temperature monitoring.

2.3 Safety instructions for the installation according to U_L or U_R

Warnings!

General markings:

- ► Use 60/75 °C or 75 °C copper wire only.
- ► Maximum ambient temperature 55 °C, with reduced output current.

Markings provided for the supply units:

- ► Suitable for use on a circuit capable of delivering not more than 5000 rms symmetrical amperes, 480 V max, when protected by K5 or H Fuses (400/480 V devices).
- ► Alternate - Circuit breakers (either inverse-time, instantaneous trip types or combination motor controller type E) may be used in lieu of above fuses when it is shown that the let-through energy (i^2t) and peak let-through current (I_p) of the inverse-time current-limiting circuit breaker will be less than that of the non-semiconductor type K5 fuses with which the drive has been tested.
- ► Alternate - An inverse-time circuit breaker may be used, sized upon the input rating of the drive, multiplied by 300 %.

Markings provided for the inverter units:

- ► The inverter units shall be used with supply units which are provided with overvoltage devices or systems in accordance with UL840 2nd ed., Table 5.1.
- ► The devices are provided with integral overload and integral thermal protection for the motor.
- ► The devices are not provided with overspeed protection.

Terminal tightening torque of lb-in (Nm)

Terminal	lb-in	Nm
X 21, X 22, X 23, X 24	10.6 ... 13.3	1.2 ... 1.5
X4, X6, X14	1.95 ... 2.2	0.22 ... 0.25
X 25	4.4 ... 7.1	0.5 ... 0.8

Wiring diagram AWG

Terminal	AWG
X 21, X 22, X 23, X 24	12 ... 8
X4, X6, X14	28 ... 16
X 25	24 ... 12

2.4 Definition of notes used

The following pictographs and signal words are used in this documentation to indicate dangers and important information:

Safety instructions

Structure of safety instructions:

Danger!
(characterises the type and severity of danger)
Note
(describes the danger and gives information about how to prevent dangerous situations)

Pictograph and signal word	Meaning
Danger!	**Danger of personal injury through dangerous electrical voltage.** Reference to an imminent danger that may result in death or serious personal injury if the corresponding measures are not taken.
Danger!	**Danger of personal injury through a general source of danger.** Reference to an imminent danger that may result in death or serious personal injury if the corresponding measures are not taken.
Stop!	**Danger of property damage.** Reference to a possible danger that may result in property damage if the corresponding measures are not taken.

Application notes

Pictograph and signal word	Meaning
Note!	Important note to ensure troublefree operation
Tip!	Useful tip for simple handling
	Reference to another documentation

Special safety instructions and application notes for UL and UR

Pictograph and signal word	Meaning
Warnings!	**Safety or application note for the operation of a UL-approved device in UL-approved systems.** Possibly the drive system is not operated in compliance with UL if the corresponding measures are not taken.
Warnings!	**Safety or application note for the operation of a UR-approved device in UL-approved systems.** Possibly the drive system is not operated in compliance with UL if the corresponding measures are not taken.

3 Technical data

3.1 General data and operating conditions

Standards and operating conditions			
Conformity		CE	Low-Voltage Directive (73/23/EEC)
Approvals		UL 508C	Power conversion equipment Underwriter Laboratories (File No. E132659) for USA and Canada
Max. permissible motor cable length	shielded	50 m	For rated mains voltage and switching frequency of 8 kHz
Packaging (DIN 4180)		Delivery packing	
Installation		● Installation in IP20 control cabinet ● For the "safe torque off" function (formerly "safe standstill"): mounting in IP54 control cabinet	
Mounting position		Vertically suspended	
Free space	above	≥ 65 mm	
	below	≥ 65 mm With ECSZS000X0B shield mounting kit: > 195 mm	
	to the sides	Side-by-side mounting without any clearance	

Environmental conditions			
Climate		3k3 in accordance with IEC/EN 60721-3-3 Condensation, splash water and ice formation not permissible.	
	Storage	IEC/EN 60721-3-1	1K3 (-25 ... + 55 °C)
	Transport	IEC/EN 60721-3-2	2K3 (-25 ... +70 °C)
	Operation	IEC/EN 60721-3-3	3K3 (0 ... + 55 °C) ● Atmospheric pressure: 86 ... 106 kPa ● Above +40 °C: reduce the rated output current by 2 %/°C.
Site altitude			0 ... 4000 m amsl ● Reduce rated output current by 5 %/1000 m above 1000 m amsl. ● Over 2000 m amsl: use is only permitted in environments with overvoltage category II
Pollution		VDE 0110 part 2 pollution degree 2	
Vibration resistance		Accelerational stability up to 0.7 g (Germanischer Lloyd, general conditions)	

General electrical data			
EMC	Compliance with EN 61800-3		
Noise emission	Compliance with limit value class A to EN 55011 (achieved with application-typical collective filter)		
Noise immunity	Requirements to EN 61800-3		
	Requirements	**Standard**	**Severity**
	ESD [1]	EN 61000-4-2	3, i. e. ● 8 kV with air discharge ● 6 kV with contact discharge
	High frequency in cables	EN 61000-4-6	10 V; 0.15 ... 80 MHz
	RF interference (enclosure)	EN 61000-4-3	3, i. e. 10 V/m; 80 ... 1000 MHz
	Burst	EN 61000-4-4	3/4, i. e. 2 kV/5 kHz
	Surge (on mains cable)	EN 61000-4-5	3, i. e. 1.2/50 µs ● 1 kV phase-phase ● 2 kV phase PE
Insulation resistance	Overvoltage category III to VDE 0110		
Discharge current to PE (to EN 61800-5-1)	> 3.5 mA AC during operation		
Enclosure	IP20 for ● standard mounting (built-in unit) ● Mounting in cold plate technique ● mounting with thermal separation (push-through technique), IP54 on the heatsink side		
Protective measure against	● Short circuit in power terminals – Motor terminal has a limited protection against short circuit (after short circuit detection, the error message must be reset.) ● Short circuit in auxiliary circuits – Digital outputs: protected against short circuit – Bus and encoder systems: limited protection against short circuit (if necessary, monitoring functions can be switched off, in this case, error messages must be reset:) ● Short to earth (protected against short to earth during operation, limited protection against short to earth on mains power-up) ● Overvoltage ● Motor stalling ● Motor overtemperature (input for KTY, I^2 x t monitoring)		
Protective insulation of control circuits	**Protective isolation of mains** Double/reinforced insulation to EN 61800-5-1		

[1] Noise immunity in the above-mentioned severities must be guaranteed through the control cabinet. The user must check the compliance with the severities!

3.2 Rated data

Rated data		Type	Axis module					
			ECSx□004		ECSx□008		ECSx□016	
Output power 400 V mains		S_r [kVA]	1.3		2.6		5.3	
Data for operation with upstream supply module on mains voltage		U_{mains} [V]	400	480	400	480	400	480
DC-bus voltage		U_{DC} [V]	15...770					
DC-bus current		I_{DC} [A]	2.5	2.0	4.9	3.9	9.8	7.8
Rated output current at 4 kHz (leads to a heatsink temperature of 70 °C at an ambient temperature of 20 °C)		I_r [A]	2.0	1.6	4.0	3.2	8.0	6.4
Rated output current at 8 kHz (leads to a heatsink temperature of 70 °C at an ambient temperature of 20 °C) [1]		I_r [A]	1.4	1.1	2.7	2.2	5.3	4.2
Max. output current (acceleration current)		I_{max} [A]	4.0		8.0		16.0	
Continuous current at standstill (holding current at 90 °C, 4 kHz)		$I_{0,eff\ 4\ kHz}$ [A]	2.0	1.6	4.0	3.2	8.0	6.4
Short-time standstill current (holding current at 90 °C, 4 kHz) [2]		$I_{0,eff\ 4\ kHz}$ [A]	2.3		4.6		9.1	
Short-time standstill current (holding current at 70 °C, 4 kHz) [2]		$I_{0,eff\ 4\ kHz}$ [A]	3.0		6.0		12.0	
Short-time standstill current (holding current at 70 °C, 8 kHz) [2]		$I_{0,eff\ 8\ kHz}$ [A]	1.5		3.0		6.0	
Power loss (operation with rated current at 4 kHz / 8 kHz)	Interior	P_{loss} [W]	13.3		17.3		20.7	
	Heatsink		14.0		29.0		64.0	
Max. output frequency		f_{out} [Hz]	600					
Weight		m [kg]	approx. 2.4					

1) If the heatsink temperature reaches 70 °C, the switching frequency automatically changes to 4 kHz.

2) The indicated temperature is the measured heatsink temperature (C0061).

□ Application software: S = Speed & Torque P = Posi & Shaft
M = Motion A = Application

Rated data		Type	Axis module					
			ECSx□032		ECSx□048		ECSx□064	
Output power 400 V mains		S_r [kVA]	8.3		11.2		13.2	
Data for operation with upstream supply module on mains voltage		U_{mains} [V]	400	480	400	480	400	480
DC-bus voltage		U_{DC} [V]	15...770					
DC-bus current		I_{DC} [A]	15.6	12.5	20.9	16.8	24.5	19.6
Rated output current at 4 kHz (leads to a heatsink temperature of 70 °C at an ambient temperature of 20 °C)		I_r [A]	12.7	10.2	17.0	13.6	20.0	16.0
Rated output current at 8 kHz (leads to a heatsink temperature of 70 °C at an ambient temperature of 20 °C) [1]		I_r [A]	8.5	6.8	11.3	9.0	13.3	10.6
Max. output current (acceleration current)		I_{max} [A]	32.0		48.0		64.0	
Continuous current at standstill [2] (holding current at 90 °C, 4 kHz)		$I_{0,eff\ 4\ kHz}$ [A]	16.0	12.8	23.0	18.4	27.0	21.6
Short-time standstill current (holding current at 90 °C, 4 kHz) [2]		$I_{0,eff\ 4\ kHz}$ [A]	18.1		27.2		36.3	
Short-time standstill current (holding current at 70 °C, 4 kHz) [2]		$I_{0,eff\ 4\ kHz}$ [A]	24.0		36.0		48.0	
Short-time standstill current (holding current at 70 °C, 8 kHz) [2]		$I_{0,eff\ 8\ kHz}$ [A]	12.1		18.1		24.2	
Power loss (operation with rated current at 4 kHz / 8 kHz)	Interior	P_{loss} [W]	27.5		34.5		41.0	
	Heatsink		117.0		132.0		158.0	
Max. output frequency		f_{out} [Hz]	600					
Weight		m [kg]	approx. 2.4		approx. 3.3			

1) If the heatsink temperature reaches 70 °C, the switching frequency automatically changes to 4 kHz.

2) The indicated temperature is the measured heatsink temperature (C0061).

□ Application software: S = Speed & Torque P = Posi & Shaft
M = Motion A = Application

3.3 Current characteristics

3.3.1 Increased continuous current depending on the control factor

In the lower speed range – the motor does not need the full motor voltage – particularly the more powerful ECS axis modules can be permanently operated with increased output current (cp. continuous current $I_{0,eff}$ 📖 34).

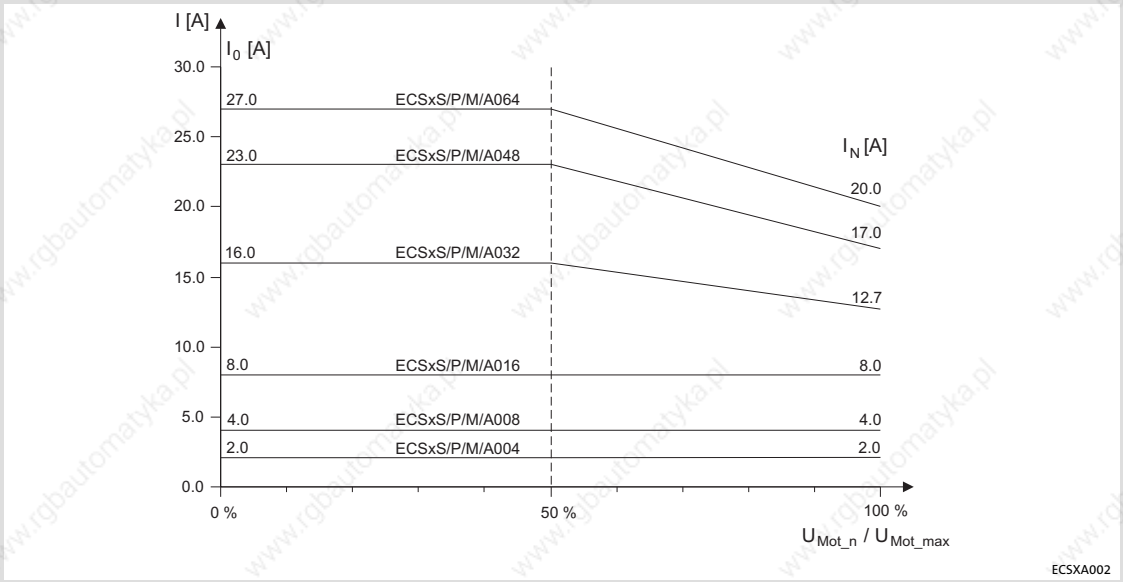

Fig. 3-1 Continuous device current, depending on the output voltage for $U_{mains} \leq 400$ V at 4 kHz

I_r	Rated output current of the axis module
U_{Mot_n}	Actual controller output voltage
U_{Mot_max}	0.9 x current mains voltage

The permissible continuous current depends on the control factor of the power output stages, approximately on the ratio of the motor voltage output in the operating point (U_{Mot_n}) to the maximum possible output voltage (U_{Mot_max}). Due to voltage drops across the components involved at rated load and a control margin, U_{Mot_max} can be estimated with 90 % of the mains voltage.

The following table shows the connections between mains voltage, DC-bus voltage and motor voltage:

Mains voltage [U_{mains}]	DC-bus voltage [$U_{DC} = U_{mains} \times 1.35$]	Output voltage (motor voltage) nominally achievable for 100 % modulation [$U_{mot} = 0.66 \times U_{DC}$]
3 x 230 V AC	310 V DC	3 x 205 V AC
3 x 380 V AC	510 V DC	3 x 340 V AC
3 x 400 V AC	540 V DC	3 x 360 V AC
3 x 415 V AC	560 V DC	3 x 370 V AC
3 x 460 V AC	620 V DC	3 x 415 V AC
3 x 480 V AC	650 V DC	3 x 435 V AC
3 x 528 V AC	712 V DC	3 x 475 V AC

For steady-state operation in generator mode with increased DC-bus voltage or supply from a closed-loop DC-voltage source, interpolate accordingly between the values given in the table.

The increased rated currents are valid for the entire voltage range specified at switching frequencies of 4 kHz and 8 kHz.

Note!

If in this connection a heatsink temperature of > 70 °C is reached, the drive switches to a switching frequency of 4 kHz, independently of the selected switching frequency.

Tip!

The operating threshold of the I x t monitoring is automatically derived from the variable continuous currents.

Example:

The ECS axis module suitable for operation in conjunction with a Lenze motor of type MCS 14L32 is to be determined.

► Rated motor data
– Rated motor torque (M_{mot}) = 17.2 Nm
– Rated motor speed (n_{mot}) = 3225 rpm
– Motor voltage at 3250 rpm (U_{mot_n3250}) = 275 V
– Rated motor current (I_{mot}) = 15 A
– Max. motor current (I_{mot_max}) = 92 A

► Application data:
– Max. torque (M_{max}) = 35 Nm
– Max. operating speed (n_{max}) = 2500 rpm
– An effective process power (P_{eff}) of 4.5 kW arises on the basis of the Mn diagram.
– The drive rating results in an effective motor current (I_{Mot_eff}) of 14.8 A.

A first estimation based on the rated current of the ECS axis module would probably lead to selecting the ECSxA048 module with a rated current of 17.0 A.

However, if we take into account the increased continuous current for smaller control factors, the more cost-effective ECSxA032 axis module with a rated current of 12.7 A can be used here.

► When the MCS 14L32 is operated with 2500 rpm, the real motor voltage is (U_{Mot_n2500}):

$$U_{Mot\_n2500} = U_{Mot\_n3250} \cdot \frac{n_{max}}{n_{Mot}} \quad \Rightarrow \quad 275\ V \cdot \frac{2500\ rpm}{3250\ rpm} = 212\ V$$

► This leads to the following max. control factor (α_{max}) of the axis module:

$$\alpha_{max} = \frac{U_{Mot\_n2500}}{U_{max}} \quad \Rightarrow \quad \frac{212\ V}{360\ V} = 0.59 = 59\ \%$$

Using the current characteristic of Fig. 3-1 (📖 36), a continuous current of 15.5 A can be determined for the ECSxA032 axis module when the control factor (α_{max}) is 59 %.

► **Result:**
Under the conditions mentioned above the MCS 14L32 Lenze motor can be operated continuously on the ECSxA032 axis module.

3.3.2 Device protection by current derating

The maximum output current is limited. With output frequencies < 5 Hz the limitation depends on the heatsink temperature.

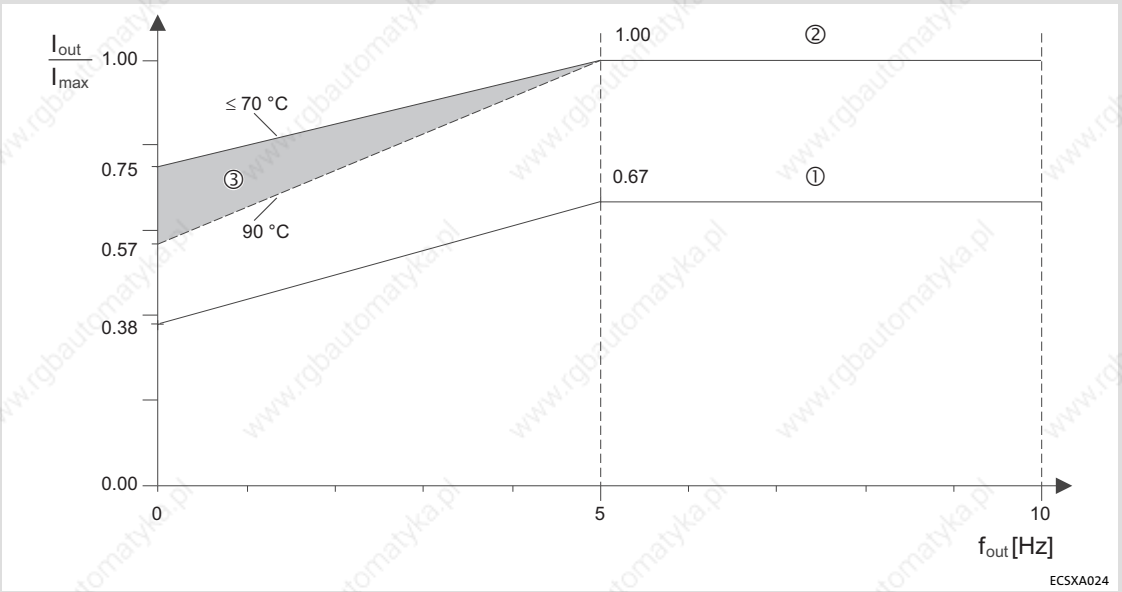

Fig. 3-2 Current derating characteristics

① Operation with switching frequency = 8 kHz (C0018 = 1).
- If the current exceeds the characteristic ①, the switching frequency is automatically changed to 4 kHz (e.g. for higher torque in acceleration processes).

② Operation with switching frequency = 4 kHz (C0018 = 0).
- The current limitation follows the characteristic ②.
- With output frequencies < 5 Hz and heatsink temperatures between 70 and 90 °C the current limit is steplessly adjusted in the range ③.

Type	I_{max} [A]				
	Switching frequency 8 kHz ①		Switching frequency 4 kHz ②		
	f_{out} > 5 Hz	f_{out} → 0 Hz	f_{out} > 5 Hz	f_{out} → 0 Hz ≤ 70 °C	f_{out} → 0 Hz 90 °C
ECSxA004	2.7	1.5	4.0	3.0	2.3
ECSxA008	5.3	3.0	8.0	6.0	4.6
ECSxA016	10.7	6.0	16.0	12.0	9.1
ECSxA032	21.3	12.1	32.0	24.0	18.1
ECSxA048	32.0	18.1	48.0	36.3	27.2
ECSxA064	42.7	24.2	64.0	48.0	36.3

4 Mechanical installation

4.1 Important notes

- ► Axis modules of the ECS series provide IP20 enclosure and can therefore only be used for installation in control cabinets.
- ► If the cooling air contains air pollutants (dust, fluff, grease, aggressive gases):
  - – Take suitable preventive measures , e.g. separate air duct, installation of filters, regular cleaning.
- ► Possible mounting positions:
  - – Vertical at the mounting plate
  - – DC bus connections (X23) at the top
  - – Motor connection (X24) at the bottom
- ► Maintain the specified clearances (above and below) to other installations!
  - – If the ECSZS000X0B shield mounting kit is used, an additional clearance is required.
  - – Ensure unimpeded ventilation of cooling air and outlet of exhaust air.
  - – Several modules of the ECS series can be installed in the control cabinet next to each other without any clearance.
- ► The mounting plate of the control cabinet
  - – must be electrically conductive.
  - – must not be varnished.
- ► In case of continuous vibrations or shocks use shock absorbers.

4.2 Mounting with fixing rails (standard installation)

4.2.1 Dimensions

Note!
Mounting with ECSZS000X0B shield mounting kit:
► Mounting clearance below the module > 195 mm

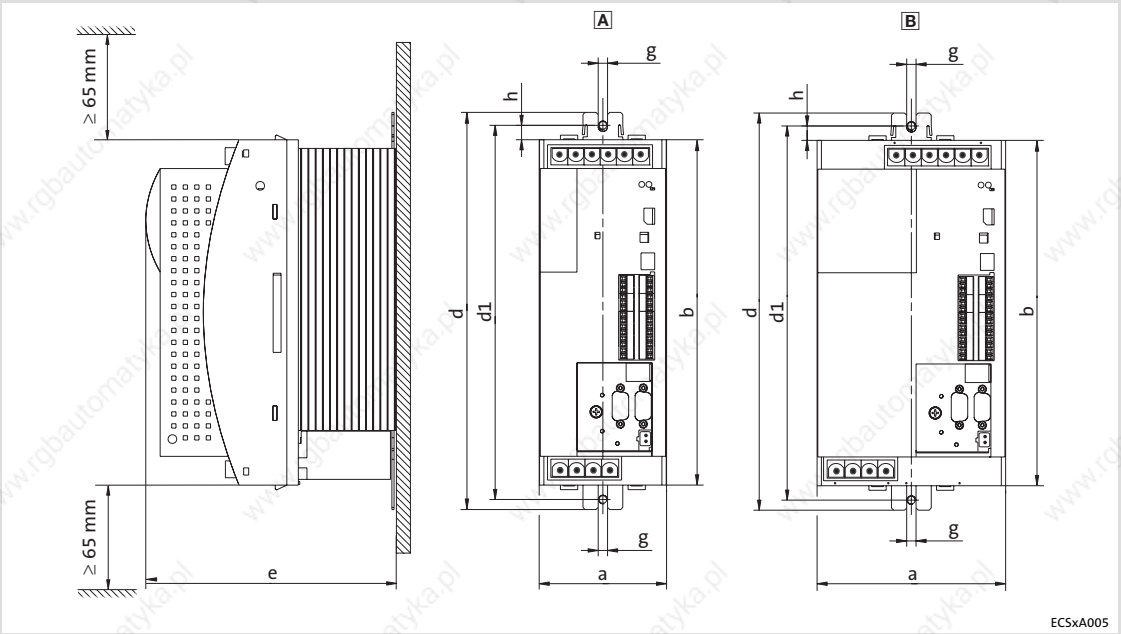

Fig. 4-1 Dimensions for "panel-mounted" design

Axis module		Dimensions [mm]						
Type	Size	a	b	d	d1	e	h	g
ECSEA004	A	88.5	240	276	260	176 212 [1]	10	6.5 (M6)
ECSEA008								
ECSEA016								
ECSEA032								
ECSEA048	B	131						
ECSEA064								

[1] max. 212 mm, depending on the plugged-on communication module

4.2.2 Mounting steps

How to install the axis module:

1. Prepare the fixing holes on the mounting surface.
   – Use the drilling jig for this purpose.
2. Take the fixing rails from the accessory kit in the cardboard box.
3. Push the rails into the slots of the heatsink:
   – From above: Push in the long side.
   – From below: Push in the short side.
4. Attach the axis module to the mounting surface.

4.3 Mounting with thermal separation (push-through technique)

For the push-through technique the rear panel of the control cabinet must be a steel plate with a thickness of at least 2 mm.

The edges of the mounting cutout and the fixing holes for the clamps must be slightly curved inwards (towards the axis module).

Cooling

With the separated heatsink the heat generation in the control cabinet can be reduced.

- ► Distribution of the power loss:
  - – approx. 65 % via separated cooler
  - – approx. 35 % in the inside of the axis module
- ► Protection class of the separated cooler: IP54
  - – The sealing surface at the heatsink of the axis module must rest completely against the mounting plate.
  - – Use a liquid thread sealant to bond the screws of the clamps.
- ► For sufficient cooling of the drive system:
  - – Air flow behind the rear panel of the control cabinet must be ≥ 3 m/s (e.g. by means of a collective fan).
- ► With sufficient cooling, the rated data of the axis modules remain valid.

4.3.1 Dimensions

Note!
Mounting with ECSZS000X0B shield mounting kit:
► Mounting clearance below the module > 195 mm

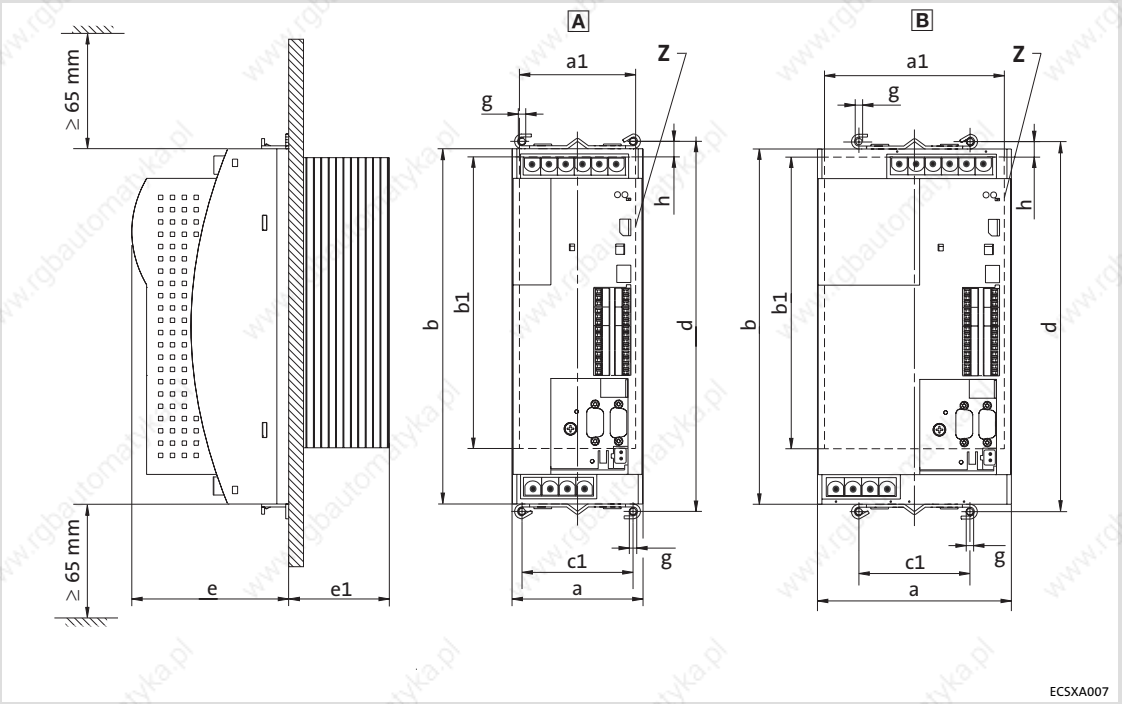

Fig. 4-2 Dimensions for "push-through design"
Z Mounting cutout (a1 x b1), 📖 45

Axis module		Dimensions [mm]									
Type	Size	a	a1	b	b1	c1	d	e	e1	g	h
ECSDA004	A	88.5	78.5	240	197	75	250	109 145 1)	67	M5	10.5
ECSDA008											
ECSDA016											
ECSDA032											
ECSDA048	B	131	121.5								
ECSDA064											

1) max. 145 mm, depending on the plugged-on communication module

Dimensions of mounting cutout

Note!

Installation with shield mounting ECSZS000X0B:

► Clearance below the mounting cutout > 220 mm

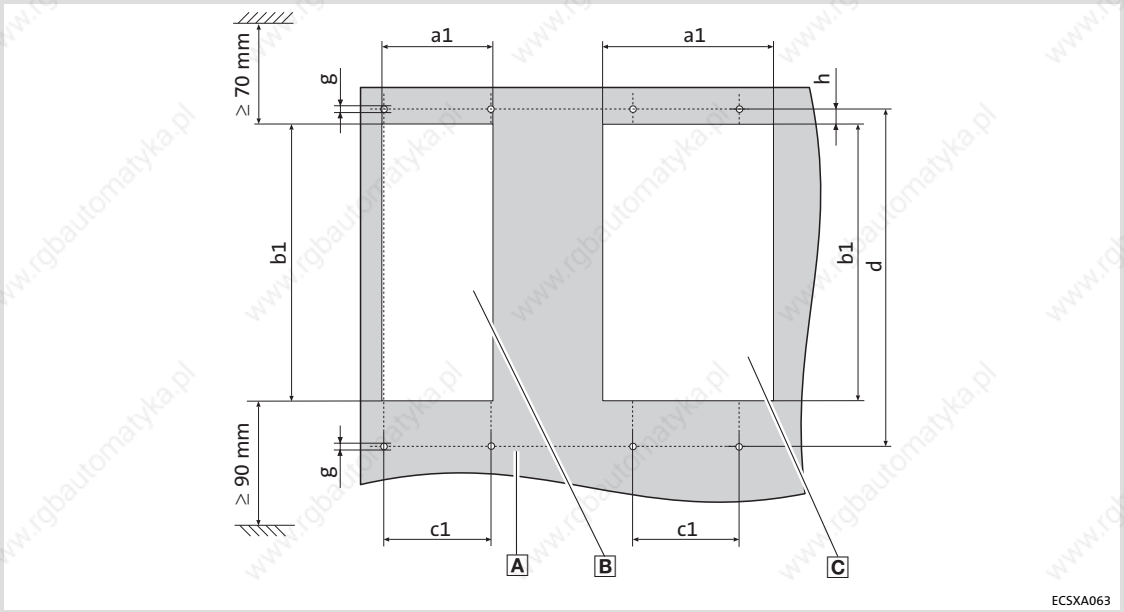

Fig. 4-3 Dimensions of mounting cutout

A Mounting surface
B Mounting cutout for size A
C Mounting cutout for size B

Axis module		Dimensions [mm]					
Type	Size	a1	b1	c1	d	g	h
ECSDA004	A	78.5	197	75	250	M5	10.5
ECSDA008							
ECSDA016							
ECSDA032							
ECSDA048	B	121.5					
ECSDA064							

4.3.2 Mounting steps

How to mount the axis module:

1. Prepare the fixing holes for the wire clamps on the mounting area.
   – For this purpose, apply a drilling jig.
2. Prepare mounting cutout.
   – The edges of the mounting cutout and the fixing holes for the wire clamps have to be slightly arched inwardly (to the axis module).
3. Brush the threads of the screws for the wire clamps with liquid thread seal.
4. Fix the wire clamps together with the functional earth conductor supplied (Fig. 4-4).
   – The functional earth conductor is part of the scope of supply of the ECS**D**A...axis modules.
5. Push the axis module into the mounting cutout.
6. Engage axis module in the wire clamp at the top and the bottom.
7. Connect the functional earth conductor to the axis module (Fig. 4-4).

Note!

Fixing the functional earth conductor to the ECS**D**A... axis module is required for a better electromagnetic compatibility (EMC).

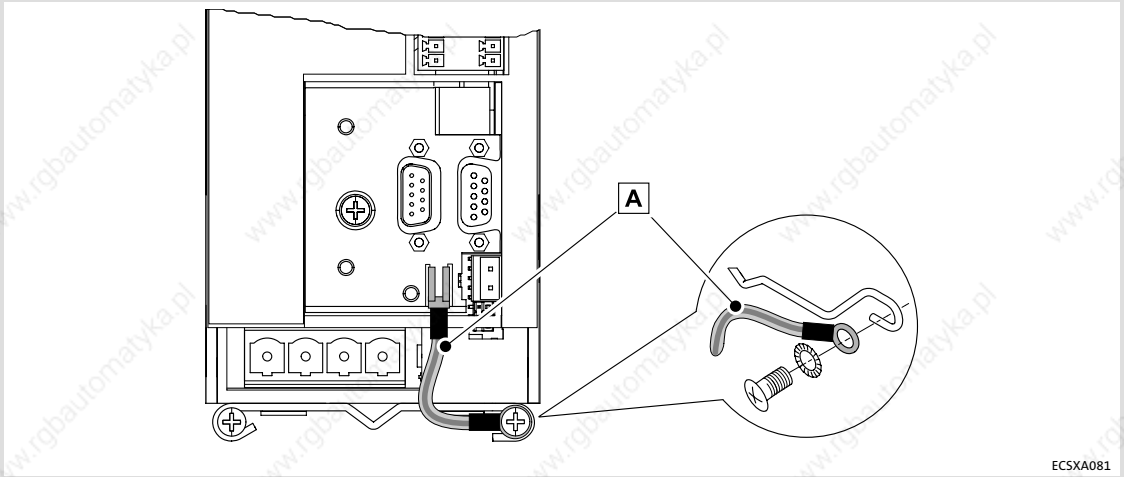

Fig. 4-4 Functional earth conductor at the axis module ECSDA...

A Functional earth conductor

4.4 Mounting in cold-plate design

The axis modules ECSC... are intended for mounting in cold-plate design (e.g. on collective coolers).

Requirements for collective coolers

The following requirements must be met to ensure a safe operation of the axis modules:

► Good thermal contact with the cooler
- – The contact surface between collective cooler and axis module must be at least as large as the cooling plate of the axis module.
- – Smooth contact surface, max. deviation 0.05 mm.
- – Connect the collective cooler with all specified screwed connections to the axis module.

► Maintain the thermal resistance R_{th} according to the table.
- – The values apply for operating the axis modules under rated conditions.

Axis module	Power to be dissipated	Heatsink - environment
Type	Ploss [W]	R_{th} [k/W]
ECSCA004	14.0	0.31
ECSCA008	29.0	
ECSCA016	64.0	
ECSCA032	117.0	0.13
ECSCA048	132.0	
ECSCA064	158.0	0.11

► Ambient conditions:
- – Furthermore the rated data regarding the ambient temperature and the derating factors at increased temperature apply to the axis modules (📖 32 et seqq.).
- – Temperature of the cooling plate (”Cold Plate”): max. +85 °C

4.4.1 Dimensions

Note!
Mounting with ECSZS000X0B shield mounting kit:
► Mounting clearance below the module > 195 mm

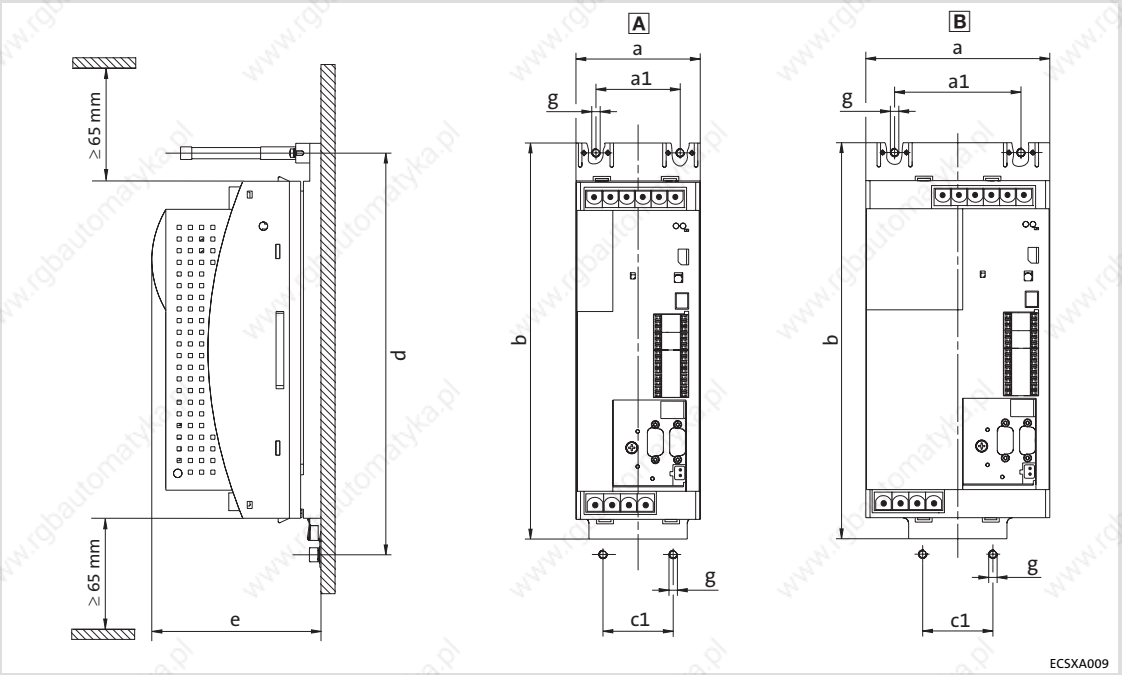

Fig. 4-5 Dimensions for "cold-plate design"

Axis module		Dimensions [mm]						
Type	Size	a	a1	b	c1	d	e	g
ECSCA004	A	88.5	60	282	50	286	121 157 1)	M6
ECSCA008								
ECSCA016								
ECSCA032								
ECSCA048	B	131	90					
ECSCA064								

1) max. 157 mm, depending on the plugged-on communication module

4.4.2 Mounting steps

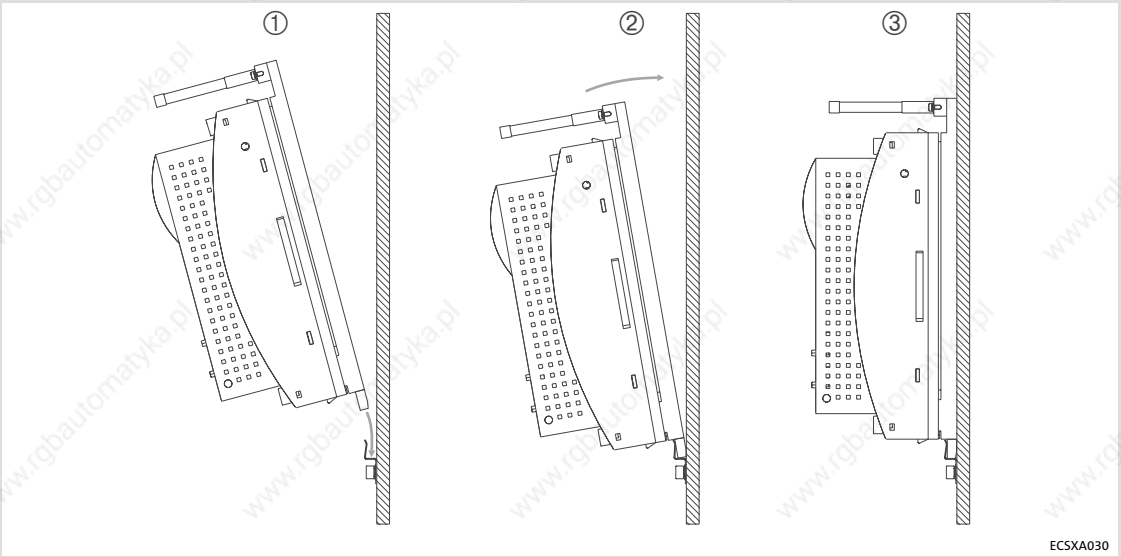

Fig. 4-6 Mounting for "cold-plate design"

Proceed as follows to mount the axis module:

1. Prepare the fixing holes on the mounting plate.
   – Use a drilling jig for this purpose.
2. Clean and degrease the contact area of collective cooler and heatsink of the axis module (e.g. with methylated spirit).
3. Screw the support onto the collective cooler.
4. Insert the axis module from above ① into the support ② and fasten the two stud bolts with 3.5 ... 4.5 Nm ③.

Note!

Penetration depth of the screws into the collective cooler: approx. 15 mm!

Tip!

The heat transfer resistance is reduced if - following step 2. -

► a thin layer of heat conducting paste is applied to the contact surface or

► heat conducting foil is used.

5 Electrical installation

5.1 Electrical isolation

The integrated electrical isolation between the power section and the control section is a protective separation (reinforced insulation) acc. to EN 61800-5-1.

To maintain this protective separation, it must be ensured that the external 24 V supply and all components connected to this supply also have a protective separation (SELV/PELV) acc. to EN 61800-5-1.

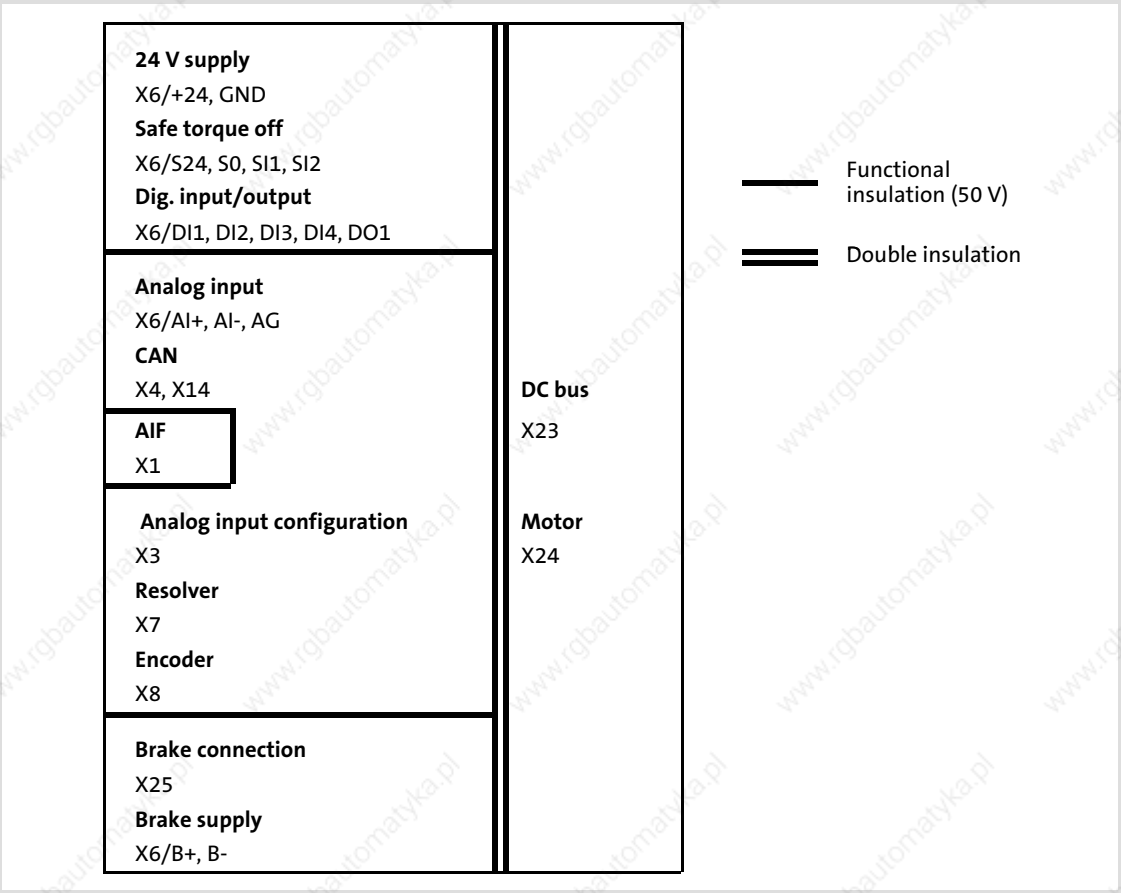

Fig. 5-1 Electrical isolation

5.2 Installation according to EMC (installation of a CE-typical drive system)

General information

- ► The electromagnetic compatibility of a machine depends on the type of installation and care taken. Especially consider the following:
  - – Assembly
  - – Filters
  - – Shielding
  - – Earthing
- ► For diverging installations, the evaluation of the conformity to the EMC Directive requires a check of the machine or system regarding the EMC limit values. This for instance applies to:
  - – Use of unshielded cables
  - – Use of collective interference filters instead of the assigned RFI filters
  - – Operation without RFI filters
- ► The compliance of the machine application with the EMC Directive is in the responsibility of the user.
  - – If you observe the following measures, you can assume that the machine will operate without any EMC problems caused by the drive system, and that compliance with the EMC Directive and the EMC law is achieved.
  - – If devices which do not comply with the CE requirements concerning noise immunity EN 61000-6-2 are operated close to the axis modules, these devices may be electromagnetically affected by the axis modules.

Assembly

- ► Connect the power supply modules, capacitor modules (optional), axis modules, RFI filters, and mains chokes to the earthed mounting plate with a surface as large as possible.
  - – Mounting plates with conductive surfaces (zinc-coated or stainless steel) allow permanent contact.
  - – Painted plates are not suitable for an EMC-compliant installation.
- ► If you use the ECSxK... capacitor module:
  - – Install the capacitor module between the power supply module and the axis module(s).
  - – If the total cable length in the DC-bus connection is > 5 m, install the capacitor module as close as possible to the axis module with the greatest power.
- ► Use of several mounting plates:
  - – Connect as much surface of the mounting plates as possible (e.g. with copper bands).
- ► Ensure the separation of motor cable and signal or mains cables.
- ► Avoid a common terminal/power strip for the mains input and motor output.
- ► Lay the cables as close as possible to the reference potential. Freely suspended cables act like aerials.

Filters

Only use RFI filters and mains chokes which are assigned to the power supply modules:

- ► RFI filters reduce impermissible high-frequency interferences to a permissible value.
- ► Mains chokes reduce low-frequency interferences which depend on the motor cables and their lengths.

Shielding

- ► Connect the motor cable shield to the axis module
  - – with the ECSZS000X0B shield mounting kit.
  - – to the mounting plate below the axis module with a large surface.
  - – Recommendation: For the shield connection, use ground clamps on bare metal mounting surfaces.
- ► If contactors, motor-protecting switches or terminals are located in the motor cable:
  - – Connect the shields of the connected cables and connect the shields to the mounting plate, too, with a surface as large as possible.
- ► Connect the shield in the motor terminal box or on the motor housing to PE:
  - – Metal glands at the motor terminal box ensure a large-surface connection of the shield and the motor housing.
- ► Shield the control cables:
  - – Connect both shield ends of the digital control cables.
  - – Connect one shield end of the analog control cables.
  - – Always connect the shields to the shield connection at the axis module over the shortest possible distance.
- ► Using the axis modules in residential areas:
  - – Additionally dampen the shield in order to limit the interfering radiation: ≥10 dB . This can be implemented by using standard, closed, metallic, and earthed control cabinets or boxes.

Earthing

- ► Earth all metallically conductive components (e. g. power supply module, capacitor module, axis module, RFI filter, motor filter, mains choke) using suitable cables connected to a central point (PE bar).
- ► Maintain the minimum cross-sections prescribed in the safety regulations:
  - – For the EMC, not the cable cross-section is important, but the cable surface and the contact surface which should be as large as possible.

5.3 Power terminals

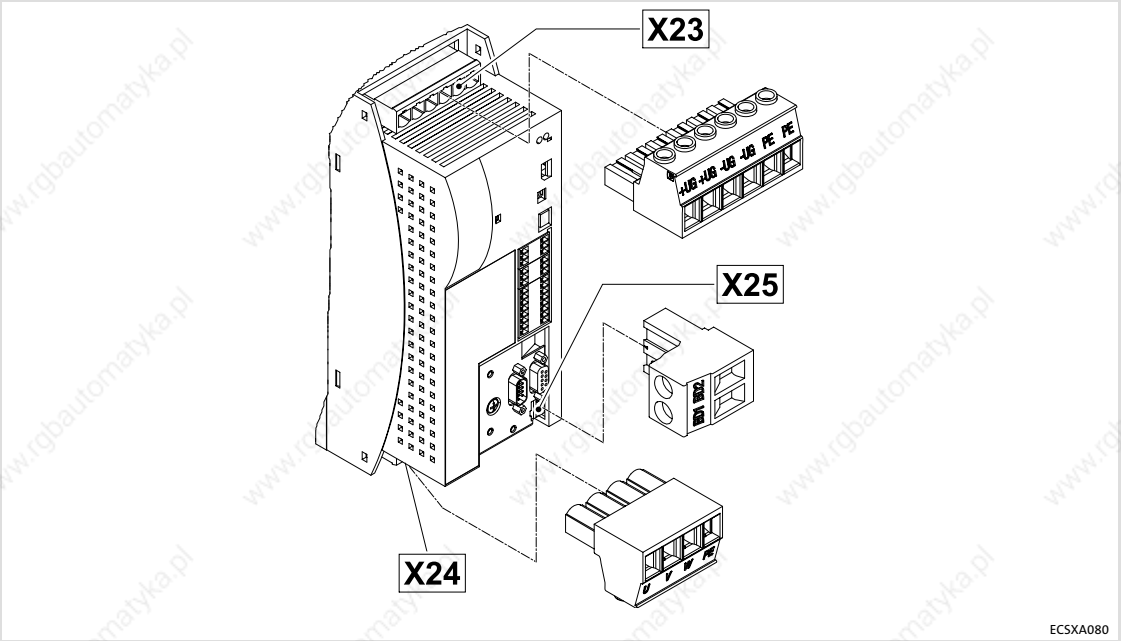

Fig. 5-2 Plug connectors for power terminals

Danger!

Dangerous voltage

The leakage current to earth (PE) is > 3.5 mA AC or > 10 mA DC.

Possible consequences:

► Death or severe injuries when the device is touched in the event of a fault.

Protective measures:

► Implement the actions required in the EN 61800-5-1. Especially:
– Fixed installation
– PE connection must conform to standards (PE conductor diameter ≥ 10 mm^2 or PE conductor must be connected twice)

Stop!

No device protection in the event of too high mains voltages

The mains input is not fused internally.

Possible consequences:

► Destruction of the device if the mains voltage is too high.

Protective measures:

► Observe the max. permissible mains voltage.

► Fuse the device correctly on the supply side against mains fluctuations and voltage peaks.

- All power connections are plug connections and coded. The ECSZA000X0B plug connector set must be ordered separately.
- Installation of the cables to EN 60204-1.
- The cables used must comply with the approvals required at the site of use (e.g. VDE, UL, etc.).

Note!

ECSDA... axis modules:

For a better electromagnetic compatibility (EMC), connect the functional earth conductor to the ECS**D**A... axis module (📖 46).

This is not required for the ECS**E**A... (standard installation) and ECS**C**A... (cold plate) axis modules!

Assignment of the plug connectors

Plug connector/terminal	Function	Electrical data
X23	**DC-bus voltage connection**	
X23/+UG	Positive DC-bus voltage	Dependent on application and type 0 ... 770 V 2 ... 24.5 A (📖 34)
X23/+UG		
X23/-UG	Negative DC-bus voltage	
X23/-UG		
X23/PE	Earth connection	
X23/PE		
X24	**Motor connection**	
X24/U	Motor phase U	Dependent on application and type 0 ... 480 V 1.6 ... 20 A (📖 34)
X24/V	Motor phase V	
X24/W	Motor phase W	
X24/PE	Earth connection	
X25	**Motor holding brake connection**	
X25/BD1	Brake connection +	23 ... 30 V DC, max. 1.5 A
X25/BD2	Brake connection -	

Cable cross-sections and screw-tightening torques

Cable type	Wire end ferrule	Possible cable cross-sections	Tightening torque	Stripping length
Plug connectors X23 and X24				
rigid	–	0.2 ... 10 mm² (AWG 24 ... 8)	1.2 ... 1.5 Nm (10.6 ... 13.3 lb-in)	5 mm
flexible	without wire end ferrule	0.2 ... 10 mm² (AWG 24 ... 8)		
	with wire end ferrule	0.25 ... 6 mm² (AWG 22 ... 10)		
	with TWIN wire end ferrule	0.25 ... 4 mm² (AWG 22 ... 12)		
Plug connector X25				
flexible screw connection	with insulated wire end ferrule	0.25 ... 2.5 mm² (AWG 22 ... 12)	0.5 ... 0.8 Nm (4.4 ... 7.1 lb-in)	5 mm
	without wire end ferrule	0.2 ... 2.5 mm² (AWG 24 ... 12)		
flexible spring connection	with insulated wire end ferrule	0.25 ... 2.5 mm² (AWG 22 ... 12)	---	10 mm
	without wire end ferrule	0.2 ... 2.5 mm² (AWG 24 ... 12)		

Shielded cables

The following factors decisively determine the effect of the shielded cables:

- ► Good shield connection
  - – Ensure a contact surface as large as possible
- ► Low shield resistance
  - – Only use shields with tin-plated or nickel-plated copper braids (shields with steel braids cannot be used).
- ► High overlap rate of the braid
  - – At least 70 ... 80 % with 90° overlap angle

The ECSZS000X0B shield mounting kit includes a wire clamp and shield sheet.

5.3.1 Connection to the DC bus (+U_G, -U_G)

Stop!

No device protection for DC bus voltage surges

In passive axis modules (without 24 V-supply), the charging circuit can be overloaded through DC bus voltage surges.

Possible consequences:

► Destruction of the device

Protective measures:

► All axis modules in the DC-bus connection should be basically supplied with a control voltage of 24 V.

► If the total cable length is > 20 m, install an axis module or a capacitor module directly at the power supply module.

► Design the ±U_G cables twisted and as short as possible. Ensure short-circuit-proof routing!

► Cable length (module ↔ module) > 30 cm: install shielded ±U_G cables.

Cable cross-sections

Cable length [1]	Wire end ferrule	Cable cross-section	Tightening torque	Stripping length
Up to 20 m	Without wire end ferrule	6 mm² (AWG 10)	1.2 ... 1.5 Nm (10.6 ... 13.3 lb-in)	5 mm
	With wire end ferrule			
> 20 m	Without wire end ferrule	10 mm² (AWG 8)		
	With wire end ferrule **Use pin-end connectors for wiring!**			

[1] Respective cable length from module to module

Fuses

► When using ECSxE power supply modules which are fused on the supply side the DC-bus supply need not be fused.

► When ECS axis modules are supplied by devices of the **82xx** or **93xx** series which can supply a **continuous current > 40 A**, use the following fuses between the supplying device and the ECS devices:

Fuse		Support
Value [A]	Lenze type	Lenze type
50	EFSGR0500ANIN	EFH20007

Warnings!

► Use UL-approved cables, fuses and fuse holders only.

► UL fuse:
– Voltage 500 ... 600 V
– Tripping characteristic ”H”, ”K5” or ”CC”

Replacing defective fuses

Danger!

Hazardous electrical voltage

Components can carry hazardous voltages until up to 3 minutes after power-off.

Possible consequences:

► Death or severe injuries when touching the device.

Protective measures:

► Replace fuses in the deenergised state only.
– Set controller inhibit (CINH) for all axis modules in DC-bus operation and disconnect all power supply modules from the mains.

5.3.2 Connection plans

Observe...
the notes in the detailed documentation of the power supply module.

Minimum wiring for internal brake resistor

The ECS**E**E... and ECS**D**E... power supply modules are provided with an integrated brake resistor. For using the internal brake resistor, carry out the following wiring:

- ► Jumper between X22/BR0 and X22/+UG (internal brake resistor connected with brake transistor)
- ► Jumper between X6/T1 and X6/T2 (temperature monitoring of non-installed external brake resistor deactivated)

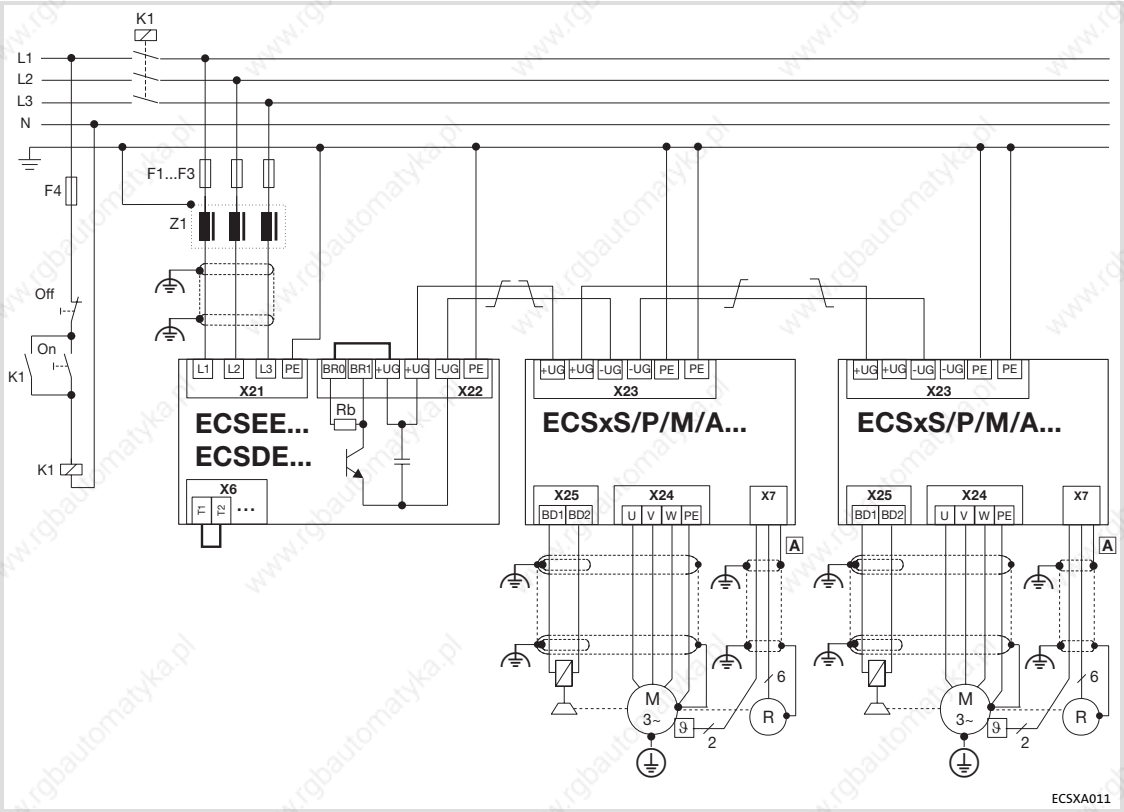

Fig. 5-3 Interconnected power system with internal brake resistor

⏚	HF-shield termination by large-surface connection to functional earth (see Mounting Instructions for ECSZS000X0B shield mounting kit)
∫	Twisted cables
K1	Mains contactor
F1 ... F4	Fuse
Z1	Mains choke / mains filter, optional
Rb	Brake resistor
A	System cable – feedback

Minimum wiring with external brake resistor

Due to its design, the ECS**C**E... power supply module is not equipped with an integrated brake resistor. Therefore, install an ERBM..., ERBS... or ERBD... brake resistor:

► Connect the brake resistor to X22/BR1 and X22/+UG.

► Connect a temperature sensor (NC contact) to X6/T1 and X6/T2.

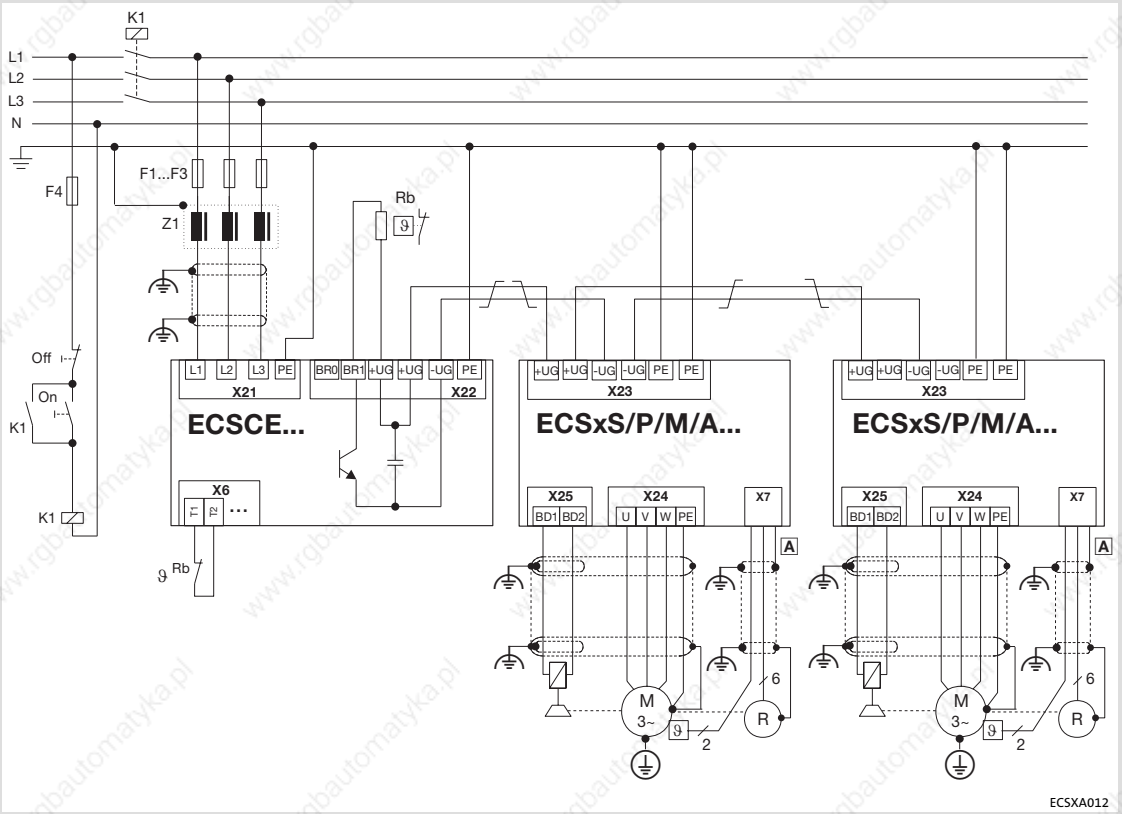

Fig. 5-4 Interconnected power system with external brake resistor

⏚	HF-shield termination by large-surface connection to functional earth (see Mounting Instructions for ECSZS000X0B shield mounting kit)
∫	Twisted cables
K1	Mains contactor
F1 ... F4	Fuse
Z1	Mains choke / mains filter, optional
Rb	Brake resistor
A	System cable – feedback

5.3.3 Motor connection

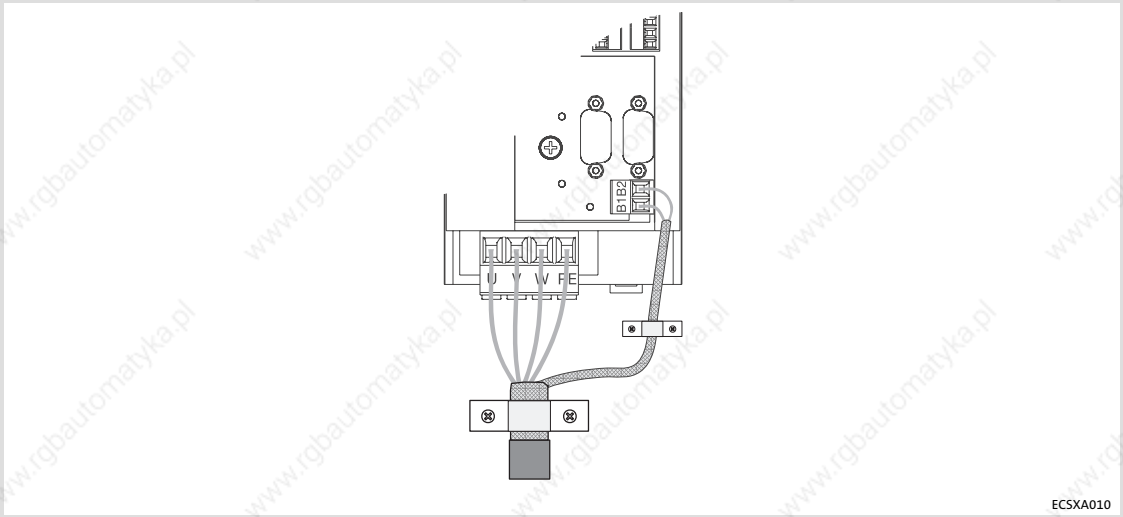

Fig. 5-5 Motor and motor holding brake connection

Motor cables

- Use low-capacitance motor cables. Capacitance per unit length:
  – Core/core: max. 75 pF/m
  – Core/shield: max. 150 pF/m
- Length: max. 50 m, shielded
- The cross-section of the motor cables are selected according to the motor standstill current (I_0) when using synchronous motors or according to the rated motor current (I_N) for asynchronous motors.
- Length of the unshielded ends: 40 ... 100 mm (depending on the cable cross-section)
- Lenze system cables meet these requirements.
- Use the ECSZS000X0B shield mounting kit for EMC-compliant wiring.

Further information ....
with regard to the EMC-compliant wiring can be found in the Mounting Instructions of the ECSZS000X0B shield mounting kit.

5.3.4 Motor holding brake connection

The motor holding brake

- ► is connected to X25/BD1 and X25/BD2
- ► and is supplied with low voltage via the terminals X6/B+ and X6/B-:
  +23 ... +30 V DC, max.1.5 A

Stop!

- ► Protect X6/B+ with an F 1.6 A fuse.
- ► If no appropriate voltage (incorrect height, incorrect polarity) is applied to the brake, it engages and can be overheated and damaged by the motor that keeps rotating.

5.3.4.1 Spark suppressor

A spark suppressor is integrated into the axis module for the motor holding brake.

5.3.4.2 Brake monitoring

The connection of the motor holding brake can be monitored for voltage failure and cable breakage if monitoring is activated under C0602.

Motor holding brake open (inactive):

The connection of the motor holding brake is monitored with regard to voltage failure and cable breakage:

- ► Threshold value for cable breakage: 140 mA ±10 %
- ► Threshold value for voltage failure: +4 V ±10 %

Motor holding brake closed (active):

The connection of the motor holding brake is monitored with regard to cable breakage if the threshold value of the voltage supply X6/B+ and X6/B- exceeds 4 V.

5.3.4.3 Requirements on the brake cables

- ► Use Lenze system cable with integrated brake cable.
  – The shielding of the brake cable must be separated.
- ► Length: max. 50 m
- ► If a separately installed brake cable is required, lay it in a shielded manner.

Note!

By the current monitoring, an ohmic voltage loss of 1.5 V along the motor cable is produced. The voltage loss can be compensated by a higher voltage at the cable entry.

The following applies to Lenze system cables:

$$U_K\,[V] = U_B\,[V] + 0.08\left[\frac{V}{m \cdot A}\right] \cdot L_L\,[m] \cdot I_B\,[A] + 1.5\,[V]$$

U_K Voltage for compensating the voltage loss at 6X/B+ and X6/B- [V]

U_B Rated operating voltage of the brake [V]

L_L Cable length [m]

I_B Brake current [A]

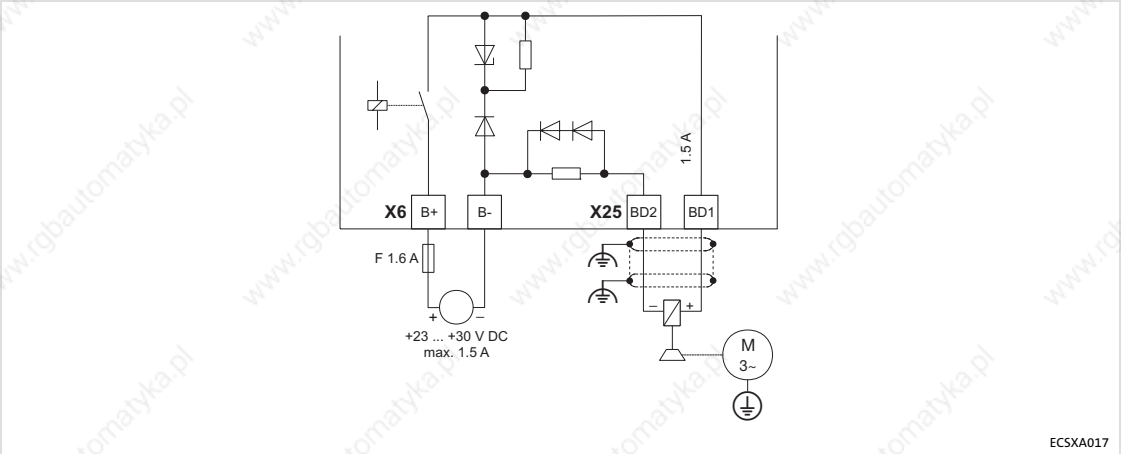

Fig. 5-6 Connection of the motor holding brake to X25

⏚ HF-shield termination by large surface connection to functional earth (see Mounting Instructions of the ECSZS000X0B shield mounting kit)

5.3.5 Connection of an ECSxK... capacitor module (optional)

Observe...
the notes in the detailed documentation of the capacitor module.

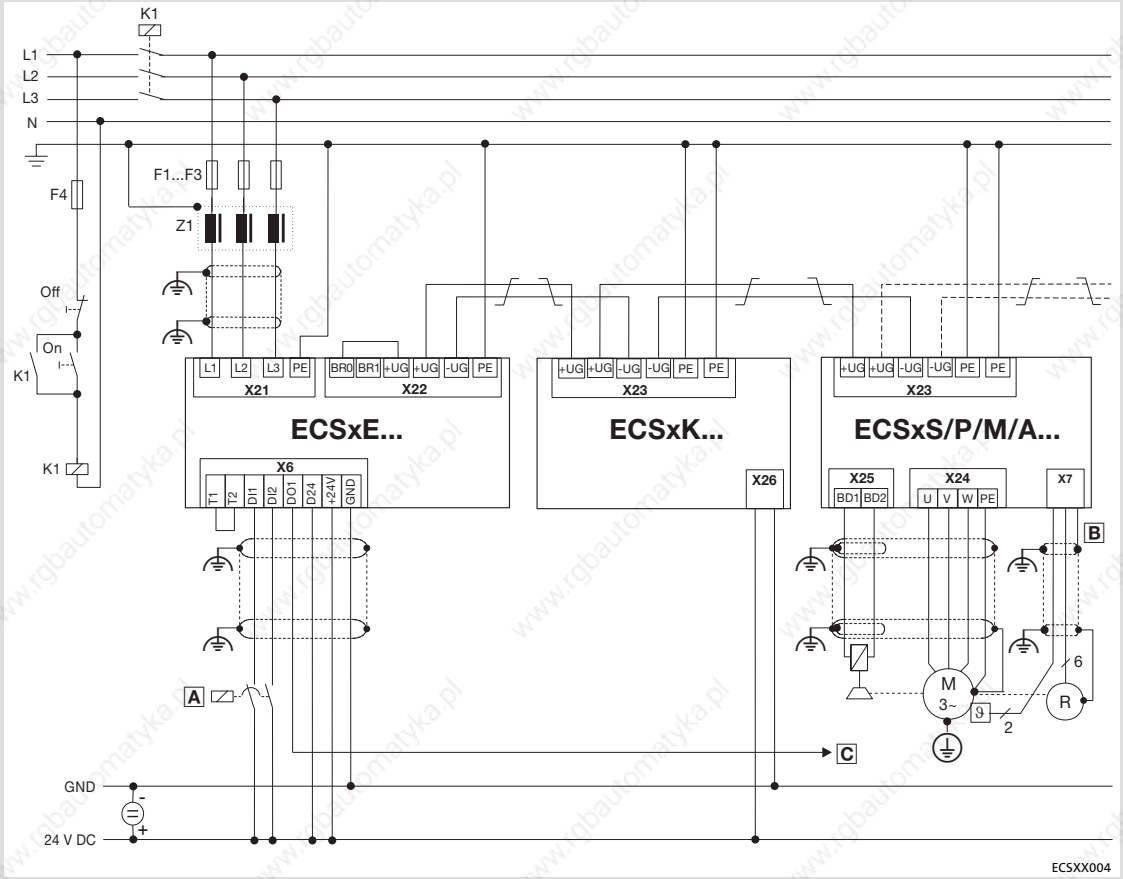

Fig. 5-7 Wiring of capacitor module ECSxK...

⏚	HF-shield termination by large-surface connection to functional earth (see Mounting Instructions for ECSZS000X0B shield mounting kit)
∫	Twisted cables
K1	Mains contactor
F1 ... F4	Fuse
Z1	Mains choke / mains filter, optional
A	Contactor relay
B	System cable – feedback
C	Terminal X6/SI1 of the connected axis modules (controller enable/inhibit)

5.4 Control terminals

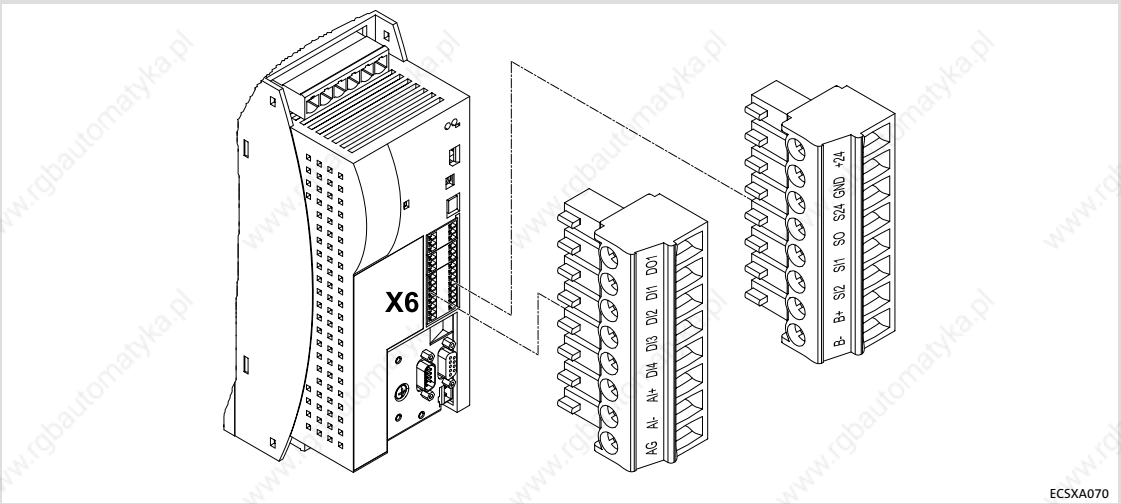

Fig. 5-8 Plug connectors for control terminals (X6)

For the supply of the control electronics an external 24 V DC voltage at terminals X6/+24 and X6/GND is required.

Stop!

- ► The control cables must always be shielded to prevent interference injections.
- ► The voltage difference between X6/AG, X6/GND and PE of the axis module may maximally amount to 50 V.
- ► The voltage difference can be limited by:
  – overvoltage-limiting components or
  – direct connection of X6/AG and X6/GND to PE.
- ► The wiring has to ensure that for X6/DO1 = 0 (LOW level) the connected axis modules do not draw energy from the DC bus. Otherwise, the power supply module may be damaged.

Shield connection of control cables and signal cables

The plate on the front of the device serves as the mounting place (two threaded holes M4) for the shield connection of the signal cables. The screws used may extend into the inside of the device by up to 10 mm. For optimum contact of the shield connection, use the wire clamps from the ECSZS000X0B shield mounting kit.

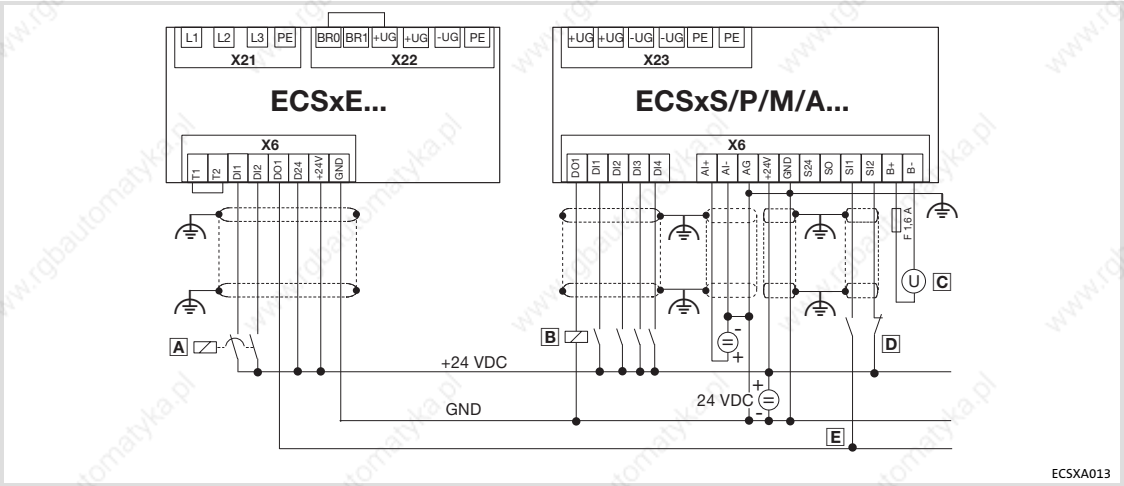

Fig. 5-9 Interconnection: Control signals with internal brake resistor

⏚	HF-shield termination by large-surface connection to functional earth (see Mounting Instructions for ECSZS000X0B shield mounting kit)
A / B	Contactor relay
C	Voltage supply for motor holding brake 23 ... 30 V DC, max. 1.5 A
D	Safe torque off (formerly ”safe standstill”)
E	Controller enable/inhibit

Switch-on sequence of the auxiliary relay

The auxiliary relay A (see Fig. 5-9) must only switch digital input X6/DI2 of the power supply module.

The switch-on sequence is as follows:

1. The higher-level control system or the operator switches digital input X6/DI1 of the power supply module to HIGH.
   – The DC bus is charged.
2. Digital output X6/DO1 of the axis module switches digital input X6/DI2 of the power supply module via relay A.
   – In the ECS axis modules, X6/DO1 is set to ”Ready” in the Lenze setting. ”Ready” is only set when the minimum DC-bus voltage is reached.
3. If X6/DI1 = HIGH and X6/DI2 = HIGH at the power supply module, X6/DO1 is switched.
   – X6/DO1 of the power supply module switches the controller enable of the axis modules.

The above switch-on sequence must be observed to ensure that the axes will only be enabled after the DC bus has been charged. Otherwise, the switch-on circuit in the power supply module can be overloaded.

Assignment of the plug connectors

Plug connector X6		
Terminal	**Function**	**Electrical data**
X6/+24	Low-voltage supply of the control electronics	20 ... 30 V DC, 0. A (max. 1 A) for starting current of 24 V: max. 2 A for 50 ms
X6/GND	Reference potential of low-voltage supply	
X6/DO1	Digital output 1	24 V DC, 0.7 A (max. 1.4 A) short-circuit-proof
X6/DI1	Digital input 1	LOW: -3 ... +5 V; -3 ... +1.5 mA HIGH: +15 ... +30 V; +2 ... +15 mA Input current at 24 V DC: 8 mA per input
X6/DI2	Digital input 2	
X6/DI3	Digital input 3	
X6/DI4	Digital input 4	
X6/AI+	Analog input +	Adjustable with jumper strip X3: -10 ... +10 V, max. 2 mA -20 ... +20 mA Resolution: 11 bits + sign
X6/AI-	Analog input -	
X6/AG	Reference potential of analog input (internal ground)	
X6/B+	Brake supply +	23 ... 30 V DC max. 1.5 A **Set brake voltage so that the permissible voltage at the brake is not under-run or exceeded – otherwise malfunction or destruction!**
X6/B-	Brake supply -	
X6/S24	Connection of ”safe torque off” (formerly ”safe standstill”)	📖 69
X6/SO		
X6/SI1		
X6/SI2		

Cable cross-sections and screw-tightening torques

Cable type	Wire end ferrule	Cable cross-section	Tightening torque	Stripping length
flexible	Without wire end ferrule	0.08 ... 1.5 mm² (AWG 28 ... 16)	0.22 ... 0.25 Nm (1.95 ... 2.2 lb-in)	5 mm
	With insulated wire end ferrule	0.25 ... 0.5 mm² (AWG 22 ... 20)		

We recommend to use control cables with a cable cross-section of 0.25 mm².

5.4.1 Digital inputs and outputs

Stop!

If an inductive load is connected to X6/DO1, a spark suppressor with a limiting function to max. 50 V ± 0 % must be provided.

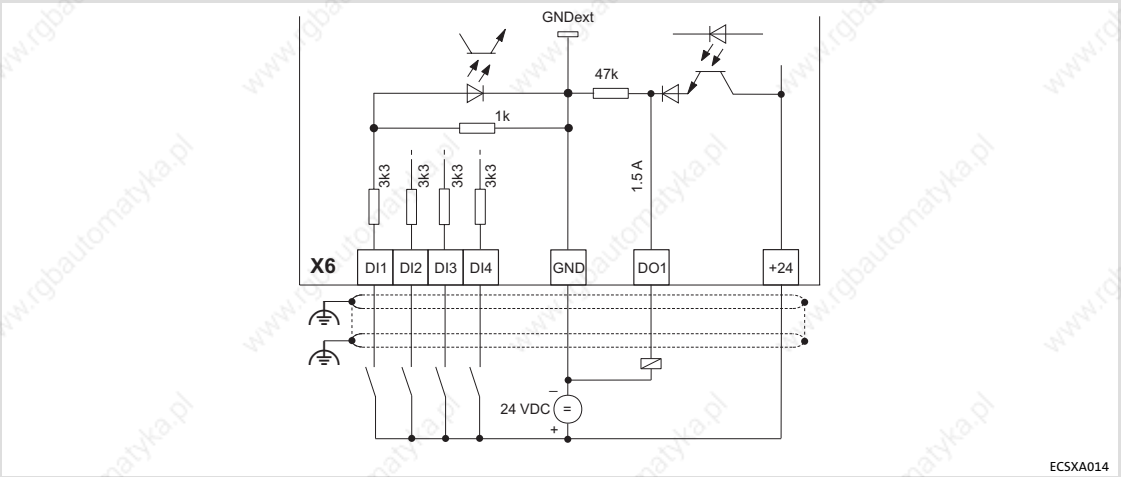

Fig. 5-10 Digital inputs and outputs at X6

- The digital inputs X6/DI1 ... DI4 are freely assignable.
- The polarity of the digital inputs X6/DI1 ... DI4 is set under C0114/x.
- The polarity of the digital output (X6/DO1) is set under C0118/1.

5.4.2 Analog input

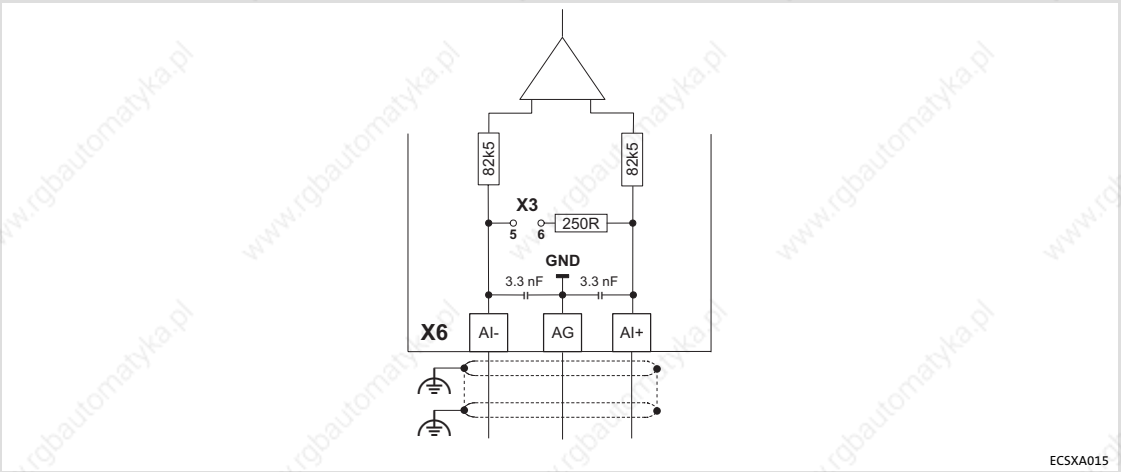

Fig. 5-11 Analog input at X6

⏚ HF-shield termination by large-surface connection to functional earth (see Mounting Instructions for ECSZS000X0B shield mounting kit)

Analog input configuration

► Set via C0034 whether the input is to be used for a master voltage or a master current.

► Set jumper bar X3 according to setting in C0034:

Stop!
Do not plug the jumper on 3-4! The axis module cannot be initialised like this.

Jumper bar X3	Setting	Measuring range
5 6 3 4 1 2	5-6 open Jumper on 1-2: Parking position	**C0034 = 0** ● Level: -10 ... +10 V ● Resolution: 5 mV (11 Bit + sign) ● Scaling: ±10 V ≡±16384 ≡±100%
5 6 3 4 1 2	5-6 closed	**C0034 = 1** ● Level: +4 ... +20 mA ● Resolution: 20 µA (10 bits without sign) ● Scaling: +4 mA ≡ 0 ≡ 0 % +20 mA ≡ 16384 ≡ 100 %
		C0034 = 2 ● Level: -20 ... +20 mA ● Resolution: 20 µA (10 bits + sign) ● Scaling: ±20 mA ≡±16384 ≡±100%

5.4.3 Safe torque off

The axis modules support the safety function ”safe torque off” (formerly ”safe standstill”), ”protection against unexpected start-up”, according to the requirements of control category 3 of EN ISO 13849. For this purpose, the axis modules are equipped with two independent safety routes. Control category 3 is reached when the output signal at X6/SO is checked as well.

5.4.3.1 Important notes

Installation/commissioning

- ► The ”safe torque off” function must only be installed and commissioned by qualified personnel.
- ► All control components (switches, relays, PLC, ...) and the control cabinet must meet the requirements of EN ISO 13849. These include for instance:
  – Switches, relays in enclosure IP54.
  – Control cabinet in enclosure IP54.
  – All other requirements can be found in EN ISO 13849.
- ► Wiring with insulated wire end ferrules is essential.
- ► All safety-relevant cables (e.g. control cable for the safety relay, feedback contact) outside the control cabinet must be protected, e.g. in the cable duct. It must be ensured that short circuits between the individual cables cannot occur. For further measures, see EN ISO 13849.
- ► If force effects from outside (e.g. sagging of hanging loads) are to be expected when the ”safe torque off” function is active, additional measures have to be taken (e.g. mechanical brakes).

Danger!

When using the ”safe torque off” function, additional measures are required for ”emergency stops”!

There is neither an electrical isolation between motor and axis module not a ”service” or ”repair switch”.

Possible consequences:

► Death or severe injuries

► The machine/drive may be destroyed or damaged

Protective measures:

► An ”emergency stop” requires the electrical isolation of the motor cable, e.g. by means of a central mains contactor with emergency stop wiring.

During operation

- ► After installation, the operator must check the ”safe torque off” function.
- ► The function check must be repeated at regular intervals, but no later than after one year.

5.4.3.2 Implementation

In the axis module, the ”safe torque off” connection is implemented with optocouplers. The optocouplers isolate the following areas electrically from each other:

- The digital inputs and outputs:
  – input X6/SI1 (controller enable/inhibit)
  – input X6/SI2 (pulse enable/inhibit)
  – brake output X6/B+, B-
  – output X6/SO (”safe torque off” active/inactive)
- The circuit for the internal control
- The final power stage

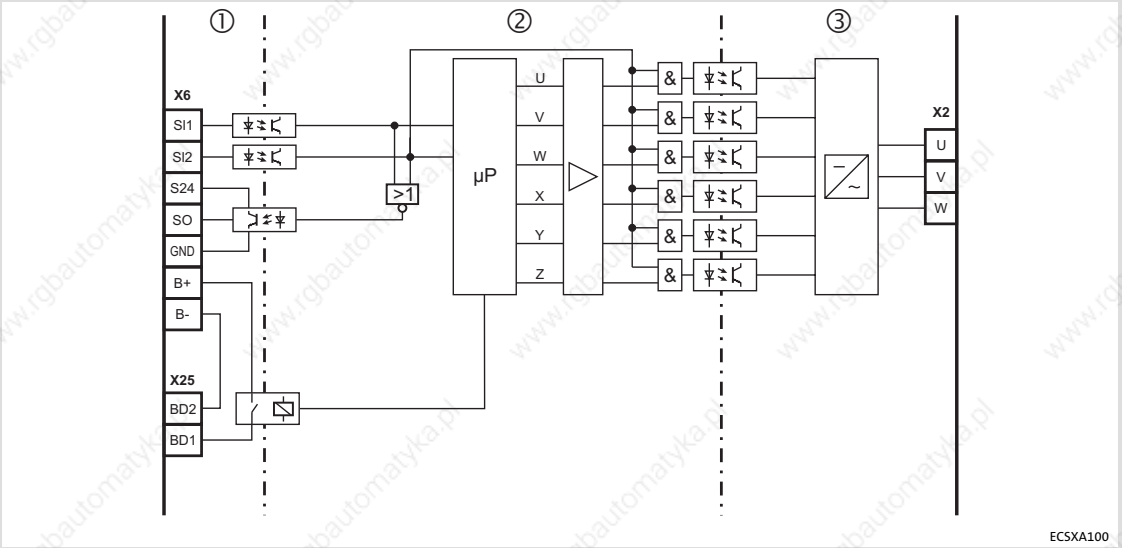

Fig. 5-12 Implementation of the ”safe torque off” function

Area 1:	Inputs and outputs
Area 2:	Circuit for the internal control
Area 3:	Power output stage

Stop!

Use insulated wire end ferrules when wiring the ”safe torque off” circuits to X6.

5.4.3.3 Functional description

The ”safe torque off” state can be initiated any time via the input terminals X6/SI1 (controller enable/inhibit) and X6/SI2 (pulse enable/inhibit). For this purpose a LOW level has to be applied at both terminals:

- X6/SI1 = LOW (controller inhibited):
  The inverter is inhibited via the microcontroller system.
- X6/SI2 = LOW (pulses inhibited):
  The supply voltage for the optocouplers of the power section driver is switched off, i. e. the inverter can no longer be enabled and controlled via the microcontroller system.
  The input signal at X6/SI2 to the hardware is additionally directed to the microcontroller system and is evaluated for the state control there. For the external further processing a HIGH level is output for the state ”safe torque off active” at the digital output X6/SO.

The control of the inverter thus is prevented by two different methods that are independent of each other. Therefore an unexpected start-up by the motor is avoided.

5.4.3.4 Technical data

Terminal assignment

Plug connector X6				
Terminal	**Function**	**Level**		**Electrical data**
X6/S24	Low-voltage supply			18 ... 30 V DC 0.7 A
X6/SO	”Safe torque off” feedback output	LOW	During operation	24 V DC 0.7 A (max. 1.4 A) Short-circuit-proof
		HIGH	”Safe torque off” active	
X6/SI1	Input 1 (controller enable/inhibit)	LOW	Controller inhibited	LOW level: -3 ... +5 V -3 ... +1.5 mA HIGH level: +15 ... +30 V +2 ... +15 mA Input current at 24 V DC: 8 mA per input
		HIGH	Controller enabled	
X6/SI2	Input 2 (pulse enable/inhibit)	LOW	Pulses for power section are inhibited	
		HIGH	Pulses for power section are enabled	

Cable cross-sections and screw-tightening torques

Cable type	Wire end ferrule	Cable cross-section	Tightening torque	Stripping length
flexible screw connection	with insulated wire end ferrule	0.25 ... 1.5 mm² (AWG 22 ... 16)	0.22 ... 0.25 Nm (1.95 ... 2.2 lb-in)	5 mm
	without wire end ferrule	0.14 ... 1.5 mm² (AWG 28 ... 16)		
flexible spring connection	with insulated wire end ferrule	0.25 ... 1.5 mm² (AWG 22 ... 16)	---	9 mm
	without wire end ferrule	0.14 ... 1.5 mm² (AWG 28 ... 16)		

5.4.3.5 Minimum wiring

In order to reach control category 3, the signal at X6/SO must be verified additionally. This requires external wiring. The external wiring must be adapted to the existing safety concepts and checked for correct operation.

Tip!

Please see page 77 for a wiring example with an electronic safety control unit for category 3.

”Safe torque off” with multiple-contact switches

The example circuit shows the minimum external wiring of the axis module with multiple-contact switches for a motor with brake.

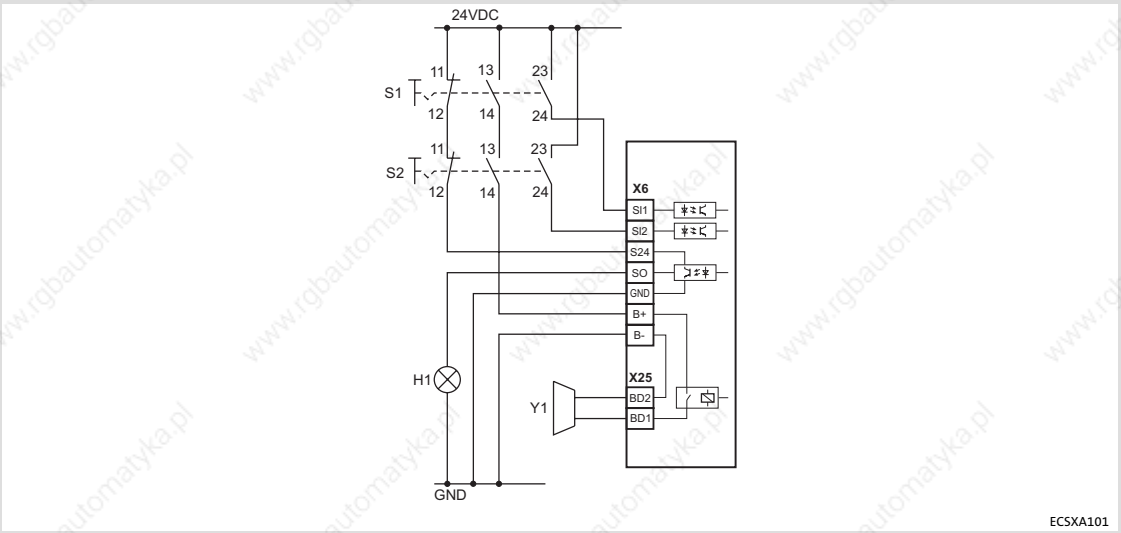

Fig. 5-13 Minimum external wiring with multiple-contact switches

Stop!

Observe the reaction of the drive when you activate controller enable and/or pulse enable (X6/SI1 or SI2 = HIGH level):

- ► The motor brake is applied immediately. This can lead to high wear on the motor holding brake (see data sheet for the brake).
- ► If the brake monitoring is active (C0602 = 0), TRIP ”Rel1” is set. Before recommissioning, the TRIP must be reset.

Preconditions for external wiring with multiple-contact switches:

- ► Switches S1 and S2 must have at least three contacts:
  - – At least one NC contact and two NO contacts. All contacts must be electrically independent and positively driven.
  - – The contacts must not be bridged.
- ► Switches S1 and S2 must be separated mechanically to avoid simultaneous switching after activation.
- ► The NO contacts of S1 and S2 must only close when the NC contacts are open. NO and NC contacts must not be activated at the same time.
- ► S1 and S2 must be designed for 24 V DC voltage. If a higher voltage occurs in the electrical environment, the switches must have an insulation voltage. The insulation voltage must at least be as high as the highest voltage that can occur in case of an error.
- ► Ensure that two channels are available for control category 3:
  - – Every time the controller is switched off (even in case of a single-channel switch-off) via the contacts 13/14 of switches S1 and S2, the brake supply is interrupted and the brake is applied. In addition, the internal brake relay must be switched off by the application.
  - – The voltage supply for the output (X6/S24) via the NC contacts 11/12 of switches S1 and S2 is only switched through in case of a two-channel controller switch-off. This ensures that the output X6/SO will not be at HIGH level if a short-circuit occurs in the internal transistor while the drive is not switched off via both channels.
- ► The switching contacts must resist the maximum current of the 24 V DC voltage supply.
- ► All control components (switches, relays, PLC, ...) and the control cabinet must meet the requirements of EN ISO 13849. These include for instance:
  - – Switches, relays in enclosure IP54.
  - – Control cabinet in enclosure IP54.
  - – All other requirements can be found in EN ISO 13849.
- ► Wiring with wire end ferrules is essential.
- ► All safety-relevant cables (e.g. control cable for the safety relay, feedback contact) outside the control cabinet must be protected, e.g. in the cable duct. It must be ensured that short circuits between the individual cables cannot occur! For further measures, see EN ISO 13849.

”Safe torque off” with safety PLC

The version ”safe torque off” with safety PLC must ensure the function of the multiple-contact switches. The following conditions must be met:

- ► The NO contacts only close when the NC contacts are open.
- ► The voltage supply for the brake must be switched off safely in the event of LOW level at X6/SI1 and/or LOW level at X6/SI2.
- ► The voltage supply for the output X6/SO must be switched off safely in the event of HIGH level at X6/SI1 and/or HIGH level at X6/SI2.
- ► Safe processing of the output signal at X6/SO for higher level safety concepts.
- ► The PLC must be programmed such that
  - – the input and output states of the output X6/SO are checked for plausibility according to the following truth table.
  - – the entire system will immediately change to a safe state when the plausibility check results in an impermissible state.

States of the ”safe torque off” function at the axis module

Level at input terminal		Resulting level at output terminal	Impermissible level at output terminal
X6/SI1	X6/SI2	X6/SO	X6/SO
LOW	LOW	HIGH	LOW
LOW	HIGH	LOW	HIGH
HIGH	LOW	LOW	
HIGH	HIGH	LOW	

- ► All control components (switches, relays, PLC, ...) and the control cabinet must meet the requirements of EN ISO 13849. These include for instance:
  - – Switches, relays in enclosure IP54.
  - – Control cabinet in enclosure IP54.
  - – All other requirements can be found in EN ISO 13849.
- ► Wiring with wire end ferrules is essential.
- ► All safety-relevant cables (e.g. control cable for the safety relay, feedback contact) outside the control cabinet must be protected, e.g. in the cable duct. It must be ensured that short circuits between the individual cables cannot occur! For further measures, see EN ISO 13849.

5.4.3.6 Function check

- ► After installation the operator must check the ”safe torque off” function.
- ► The function check must be repeated at regular intervals, after one year at the latest.

Stop!
If the function check leads to impermissible states at the terminals, commissioning cannot take place!

Test specifications

- ► Check the circuitry with regard to correct function.
- ► Check directly at the terminals whether the ”safe torque off” function operates faultlessly in the axis module:

States of the ”safe torque off” function on the axis module

Level at input terminal		Resulting level at output terminal	Impermissible level at output terminal
X6/SI1	X6/SI2	X6/SO	X6/SO
LOW	LOW	HIGH	LOW
LOW	HIGH	LOW	HIGH
HIGH	LOW	LOW	
HIGH	HIGH	LOW	

5.4.3.7 Example: Wiring with electronic safety control unit for category 3

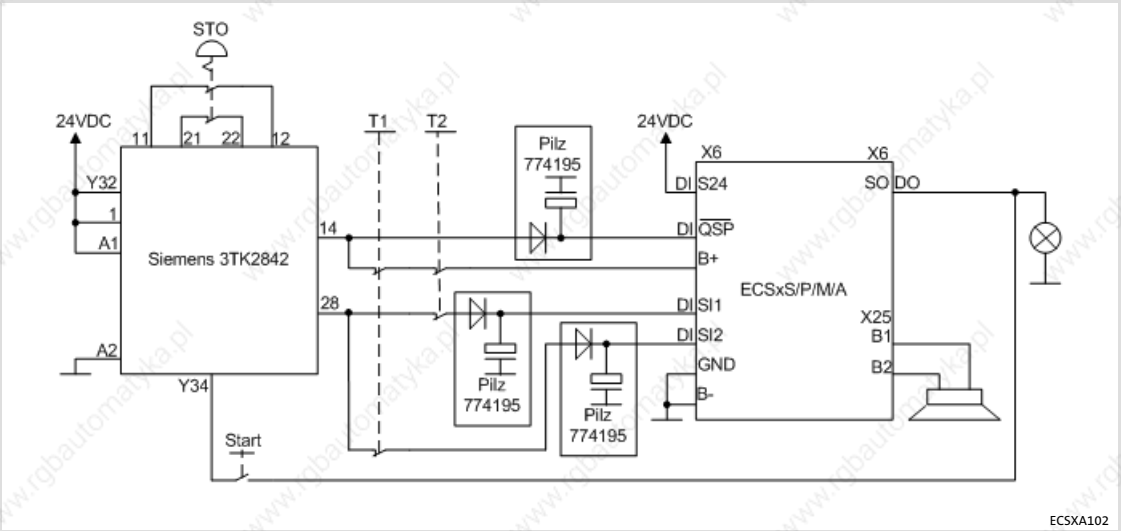

Fig. 5-14 Example: Wiring with "Siemens 3TK2842"safety control unit

T1 Test key 1
T2 Test key 2

- The motor is shutdown in accordance with stop category 1 of EN 60204 when the safety function is requested.
- The delay time of the safety control unit and the quick stop deceleration time have to be coordinated with the brake closing time.
- The diode-capacitor combination prevents the test pulses of the safety control unit from disturbing the smooth running of the motor, as otherwise a short-time inhibit of the controller cannot be ruled out. It can be procured from the company Pilz (Pilz order number: 774195) as a complete terminal.

Manual test of the disconnecting paths

- The disconnecting paths have to be checked individually in succession.
- If the test keys (T1, T2) are pressed, the motor has to be torqueless immediately and the brake has to engage.
- When the safety control unit is switched off, or if both test keys are pressed at the same time, the feedback "STO" has to signalise. This feedback is not reliable and only serves as an information for the operator that a switch-on is possible now.
- If the actual state deviates from the facts described here, switch off the drive immediately. Eliminate the fault before the restart is carried out.

5.5 Automation interface (AIF)

The keypad XT or a communication module can be attached to or removed from the automation interface (X1). This is also possible during operation.

- ► The keypad XT serves to enter and visualise parameters and codes.
- ► The communication modules serve to network the power supply modules and axis modules of the ECS servo system with the host system (PLC or PC).

The following combinations are possible:

Operating/communication module	Type/order number	Can be used together with	
		ECSxE	ECSxS/P/M/A
Keypad XT	EMZ9371BC	✓	✓
Diagnosis terminal (keypad XT with hand-held)	E82ZBBXC	✓	✓
LECOM-A (RS232)	EMF2102IB-V004	✓	✓
LECOM-B (RS485)	EMF2102IB-V002	✓	✓
LECOM-A/B (RS232/485)	EMF2102IB-V001	✓	✓
LECOM-LI (optical fibre)	EMF2102IB-V003	✓	✓
LON	EMF2141IB	–	✓
INTERBUS	EMF2113IB	–	✓
PROFIBUS-DP	EMF2133IB	–	✓
CANopen/DeviceNet	EMF2175IB	–	✓

Further information ....

on wiring and application of communication modules can be found in the corresponding Mounting Instructions and Communication Manuals.

5.6 Wiring of the system bus (CAN)

Note!

System bus (CAN)

In case of the **ECSxA...** axis module the communication can take place with a master system or further controllers via both CAN bus interfaces (X4 or X14).

MotionBus (CAN)

The term ”MotionBus (CAN)” expresses the functionality of the CAN bus interface X4 for the **ECSxS/P/M...** axis modules. In these devices the communication with a master system or further controllers is exclusively carried out via X4. The parameter setting and the diagnostics is exclusively executed via the interface X14.

Basic wiring of the CAN buses

The two following schematic diagrams show drive systems with different master value concepts:

- ► In Fig. 5-15 a higher-level control takes over the function of the master, e. g. ETC.
- ► In Fig. 5-16 the function of the master is enabled by a controller that is assigned to the master.

In both representations the master value transmission is effected via the MotionBus (CAN).

The system bus (CAN) serves to diagnose and/or parameterise the drives.

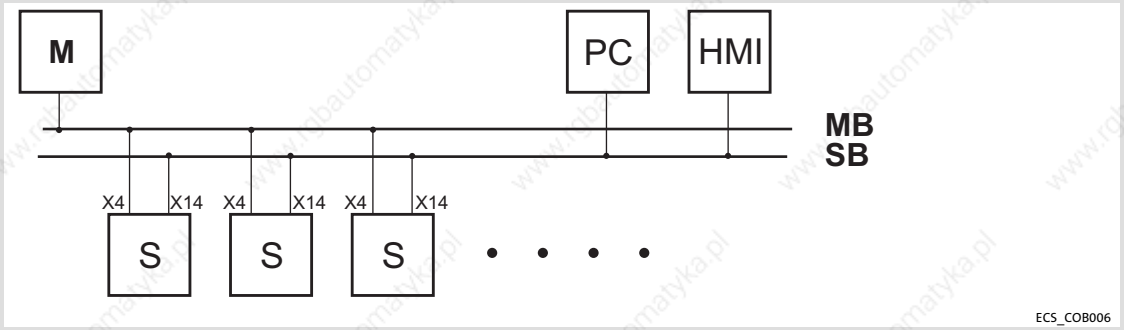

Fig. 5-15 MotionBus (CAN) with higher-level control

MB	MotionBus (CAN), connection to plug connector X4
SB	System bus (CAN), connection to plug connector X14
M	Master
E	Slave
PC	PC
HMI	HMI / operating unit

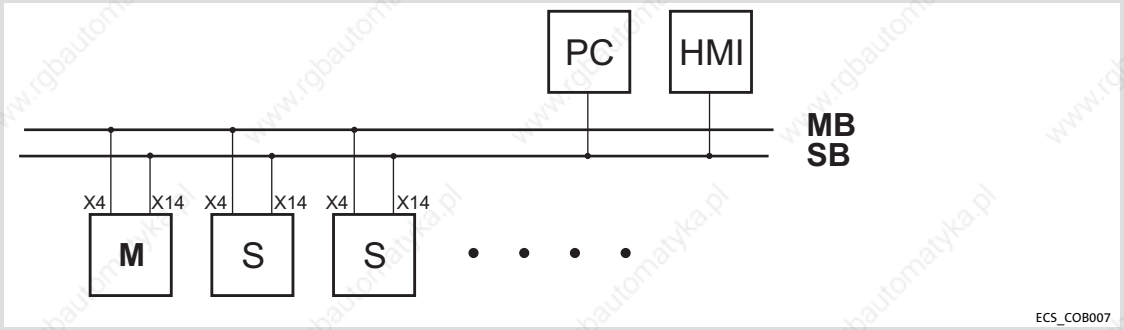

Fig. 5-16 MotionBus (CAN) with controller as master

MB	MotionBus (CAN), connection to plug connector X4
SB	System bus (CAN), connection to plug connector X14
M	Master
E	Slave
PC	PC
HMI	HMI / operating unit

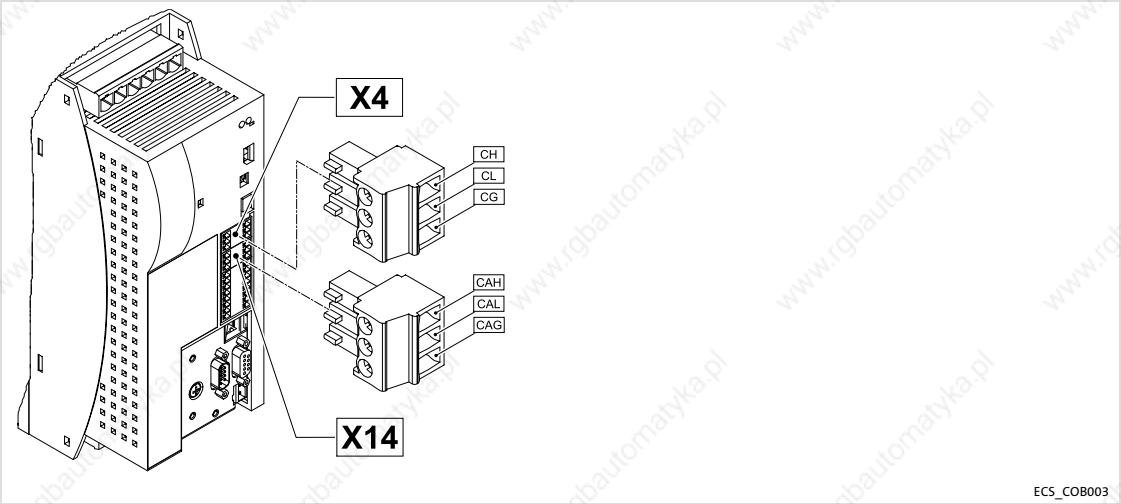

Fig. 5-17 Bus connections on the controller

Assignment of the plug connectors

X4 (CAN)	X14 (CAN-AUX)	Description
CH	CAH	CAN-HIGH
CL	CAL	CAN-LOW
CG	CAG	Reference potential

Specification of the transmission cable

For the use of the transmission cable, follow our recommendations:

Specification of the transmission cable		
Total length	≤ 300 m	≤ 1000 m
Cable type	LIYCY 2 x 2 x 0.5 mm2 (paired with shielding)	CYPIMF 2 x 2 x 0.5 mm^2 (paired with shielding)
Cable resistance	≤ 80 Ω/km	≤ 80 Ω/km
Capacitance per unit length	≤ 130 nF/km	≤ 60 nF/km

System bus (CAN) wiring

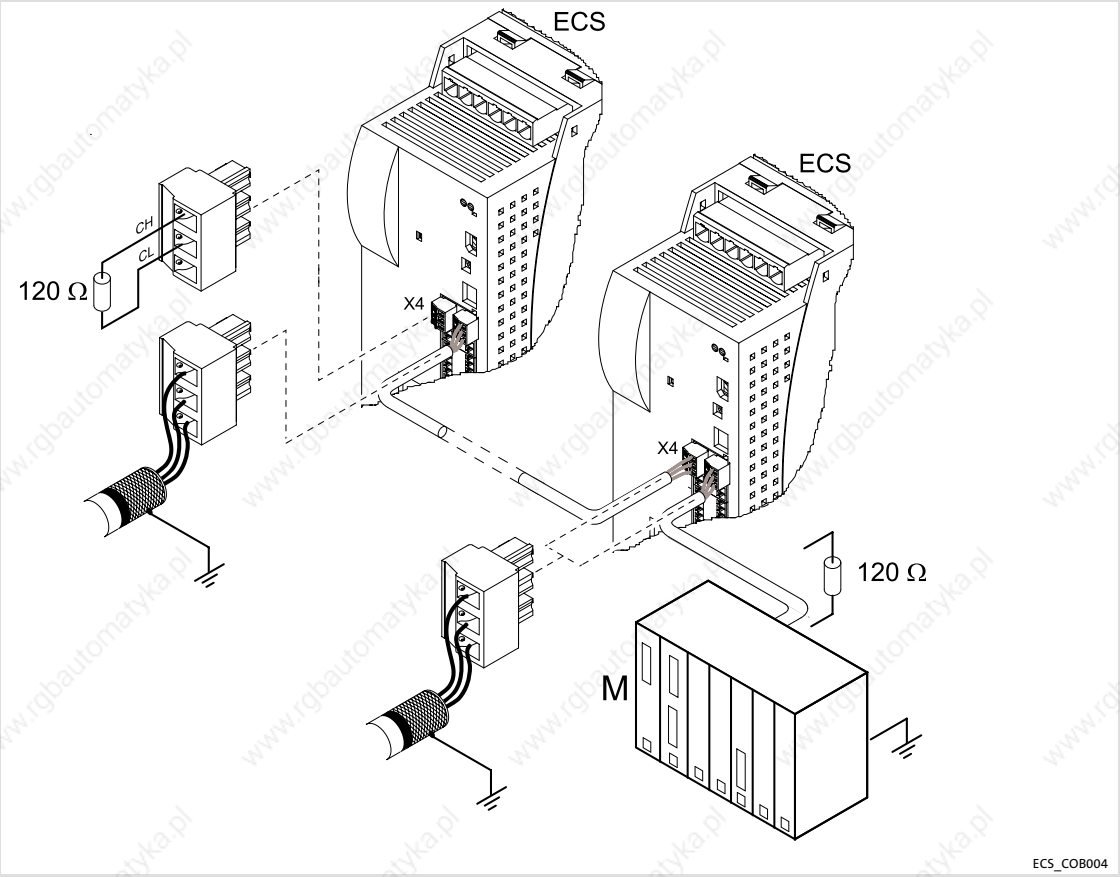

Fig. 5-18 Example: System bus (CAN) wiring via interface X4

ECS ECS axis module
M Master control, e.g. ETC

Note!

Connect one bus terminating resistor (120 Ω) each to the first and last node of the system bus (CAN).

Bus cable length

Note!
Be absolutely sure to observe the permissible cable lengths.

1. Check the compliance with the total cable length in Tab. 5-1.

The total cable length is defined by the baud rate.

Baud rate [kBit/s]	**Max. bus length** [m]
50	1500
125	630
250	290
500	120
1000	25

Tab. 5-1 Total cable length

2. Check the compliance with the segment cable length in Tab. 5-2.

The segment cable length is defined by the cable cross-section used and by the number of nodes. Without using a repeater, the segment cable length equals the total cable length.

Nodes	**Cable cross-section**			
	0.25 mm²	**0.5 mm²**	**0.75 mm²**	**1.0 mm²**
2	240 m	430 m	650 m	940 m
5	230 m	420 m	640 m	920 m
10	230 m	410 m	620 m	900 m
20	210 m	390 m	580 m	850 m
32	200 m	360 m	550 m	800 m
63	170 m	310 m	470 m	690 m

Tab. 5-2 Segment cable length

3. Compare the two values to each other.

If the value determined from Tab. 5-2 is smaller than the total cable length from Tab. 5-1 that is to be realised, the use of repeaters is required. Repeaters divide the total cable length into segments.

Example: Selection help

Specifications	
● Cable cross-section:	0.5 mm² (according to cable specifications 📖 81)
● Number of nodes:	63
● Repeater:	Lenze-repeater, type 2176 (cable reduction: 30 m)

For the max. number of nodes (63), the following cable lengths / number of repeaters from the specifications must be observed:

Baud rate [kbit/s]	**50**	**120**	**250**	**500**	**1000**
Max. cable length [m]	1500	630	290	120	25
Segment cable length [m]	310	310	290	120	25
Number of repeaters	5	2	-	-	-

Check repeater application

Specifications	
● Baud rate:	125 kbit/s
● Cable cross-section:	0.5 mm^2
● Number of nodes:	28
● Cable length:	450 m

Test steps	Cable length	See
1. Total cable length at 125 kbit/s:	630 m	Tab. 5-1
2. Segment cable length for 28 nodes and a cable cross-section of 0.5 mm^2:	360 m	Tab. 5-2
3. Comparison: The value in point 2 is smaller than the cable length of 450 m to be implemented.		

Conclusion

- Without the use of repeaters, the cable length of 450 m that is to be implemented is not possible.
- After 360 m (point 2), a repeater has to be used.

Result

- The Lenze repeater, type 2176 (cable reduction: 30 m) is used
- Calculation of the max. cable length:
  First segment: 360
  Second segment: 360 m (according to Tab. 5-1) *minus* 30 m (cable reduction if a repeater is used)

→ Max. cable length to be implemented with a repeater: 690 m.
→ Therefore, the specified cable length can be implemented.

Note!

The use of further repeaters is recommended as

► a service interface
Advantage: Trouble-free connection during bus operation is possible.

► Calibration interface
Advantage: The calibration/programming unit remains electrically isolated.

5.7 Wiring of the feedback system

Different feedback systems can be connected to the axis module:

- ► Resolver to X7 (📖 86)
- ► Encoder to X8 (📖 87)
  - – Incremental encoder with TTL level
  - – Sin/cos encoder with rated voltage (5 ... 8 V)
  - – Sin/cos absolute value encoder (single-turn/multi-turn) with serial communication (Hiperface® interface)

Note!

If a ”safe isolation” acc. to EN 61140 between the encoder cable and motor cable (e.g. by using separating webs or separated draglines) is **not ensured** on the entire cable length cable due to an installation on the system side, the encoder cable must be provided with an insulation resistance of 300 V. Lenze encoder cables meet this requirement.

► We recommend to use Lenze encoder cables for wiring.

► In case of self-prepared cables
- – only use cables with shielded cores twisted in pairs.
- – observe the notes on wiring/preparation on the following pages.

5.7.1 Resolver connection

Note!
Before using a resolver from another manufacturer, please consult Lenze.

Connect a resolver via the 9-pole Sub-D socket X7.

Features

- Resolver: U = 10 V, f = 4 kHz
- Resolver and resolver supply cable are monitored for open circuit (fault message ”Sd2”).

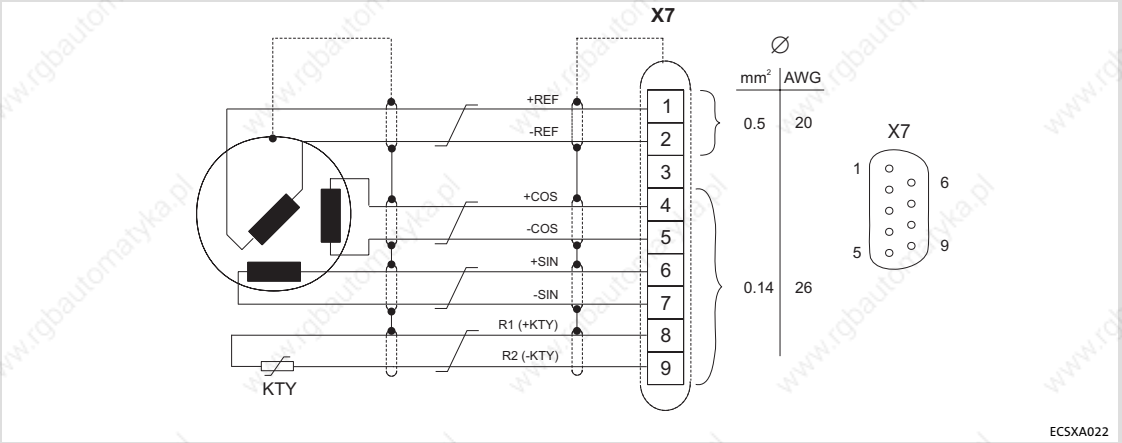

Fig. 5-19 Resolver connection

Assignment of socket connector X7: Sub-D 9-pole									
Pin	1	2	3	4	5	6	7	8	9
Signal	+Ref	-Ref	GND	+COS	-COS	+SIN	-SIN	R1 (+KTY)	R2 (-KTY)
	0.5 mm² (AWG 20)		–	0.14 mm² (AWG 26)					

5.7.2 Encoder connection

Danger!

For operating systems up to and including version 7.0:

Uncontrolled movements of the drive possible when absolute value encoders are used!

If an **absolute value encoder** is disconnected from the axis module during operation, a OH3-TRIP (fault no. ”0053”) occurs. If the **absolute value encoder** now is connected to X8 again and a TRIP-RESET is carried out, the drive may start up in an uncontrolled manner with a high speed and a high torque. An SD8-TRIP (fault no. ”0088”) will not occur, as would be expected.

Possible consequences:

► Death or severest injuries

► Destruction or damage of the machine/drive

Protective measures:

► If a TRIP occurs during commissioning when an **absolute value encoder** is used, check the history buffer C0168. If an SD8-TRIP (fault no. ”0088”) is at the second or third place, it is absolutely necessary to switch off and on again the supply of the control electronics (24 V supply).

Via the 9-pole Sub-D-plug X8, you can connect the following encoders:

► Incremental encoder
- – with two 5 V complementary signals (TTL encoders) that are electrically shifted by 90°.
- – Optionally, the zero track can be connected.

► Sin/cos encoder
- – with rated voltage (5 ... 8 V).
- – with serial communication (single-turn or multi-turn; the initialisation time of the axis module is extended to approx. 2 s).

The controller supplies the encoder with voltage.

Use C0421 to set the supply voltage V_{CC} (5 ... 8 V) to compensate, if required, the voltage loss [ΔU] on the encoder cable:

$$\Delta U \cong 2 \cdot L_L\,[m] \cdot R/m\,[\Omega/m] \cdot I_G\,[A]$$

ΔU	Voltage loss on the encoder cable [V]
L_L	Cable length [m]
R/m	Resistance per meter of cable length [Ω/m]
I_G	Encoder current [A]

Stop!

Observe the permissible connection voltage of the encoder used. If the values in C0421 are set too high, the encoder can be destroyed!

Incremental encoder (TTL encoder)

Features	
Input/output frequency:	0 ... 200 kHz
Current consumption:	6 mA per channel
Current on output V_{CC} (X8/pin 4):	Max. 200 mA

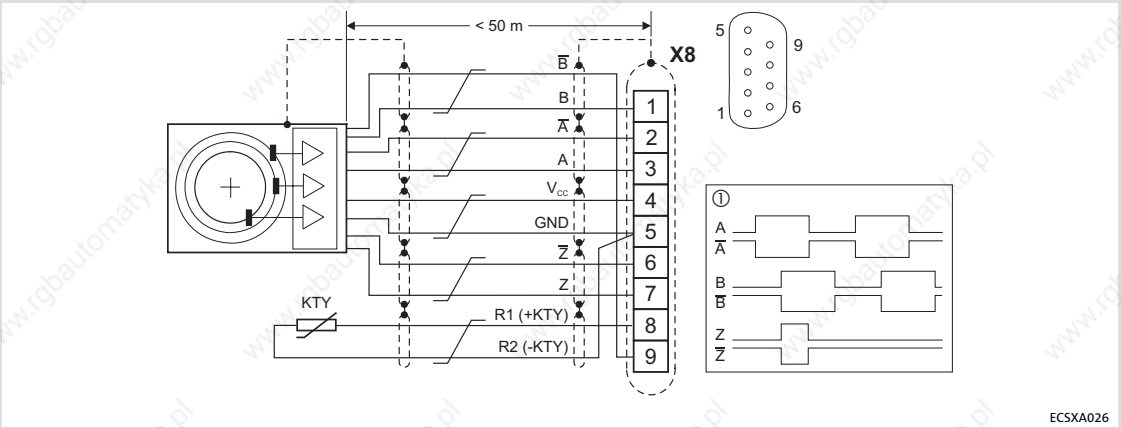

Fig. 5-20 Connection of incremental encoder with TTL level

① Signals in case of clockwise rotation
Cores twisted in pairs

Assignment of plug connector X8: Sub-D 9-pole									
Pin	1	2	3	4	5	6	7	8	9
Signal	B	$\overline{A}$	A	V_{CC}	GND (R1/+KTY)	$\overline{Z}$	Z	R2 (-KTY)	$\overline{B}$
	0.14 mm² (AWG 26)			1 mm² (AWG 18)		0.14 mm² (AWG 26)			

SinCos encoder

Features	
Input/output frequency:	0 ... 200 kHz
Internal resistance (R_i):	221 Ω
Offset voltage for signals SIN, COS, Z:	2.5 V

- ► The differential voltage between signal track and reference track must not exceed 1 V ± 10 %.
- ► The connection is open-circuit monitored (fault message ”Sd8”)
- ► For encoders with tracks sine, $\overline{\text{sine}}$ and cosine, $\overline{\text{cosine}}$:
  – Assign RefSIN with $\overline{\text{sine}}$.
  – Assign RefCOS with $\overline{\text{cosine}}$.

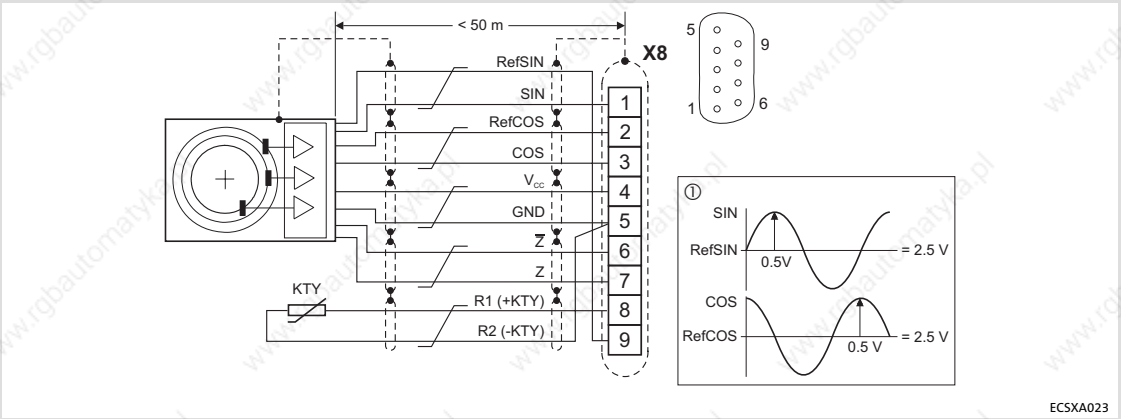

Fig. 5-21 Sin/cos encoder connection

① Signals in case of clockwise rotation
Cores twisted in pairs

Assignment of plug connector X8: Sub-D 9-pole									
Pin	1	2	3	4	5	6	7	8	9
Signal	SIN	RefCOS ($\overline{\text{cos}}$)	COS	V_{CC}	GND (R2/-KTY)	$\overline{Z}$ or -RS458	Z or +RS485	R1 (+KTY)	RefSIN ($\overline{\text{sin}}$)
	0.14 mm² (AWG 26)			1 mm² (AWG 18)		0.14 mm² (AWG 26)			

5.7.3 Digital frequency input/output (encoder simulation)

The digital frequency coupling of ECSxS/P/A axis modules basically is effected as a master-slave connection via the interface X8. This interface can either be used as a digital frequency input or as a digital frequency output (e. g. for encoder simulation) (configuration via C0491).

Features

X8 as digital frequency input	X8 as digital frequency output
● Input frequency: 0 ... 200 kHz ● Current consumption: max. 6 mA per channel ● Two-track with inverse 5 V signals and zero track ● Possible input signals: – incremental encoder with two 5 V complementary signals (TTL encoders) offset by 90° ● The function of the inputs signals can be set via C0427.	● Output frequency: 0 ... 200 kHz ● Permissible current loading: max. 20 mA per channel ● Two-track with inverse 5 V signals (RS422) ● The function of the output signals can be set via C0540.

Wiring

► 1 slave on the master:
Wire master and slave to each other directly via interface X8.

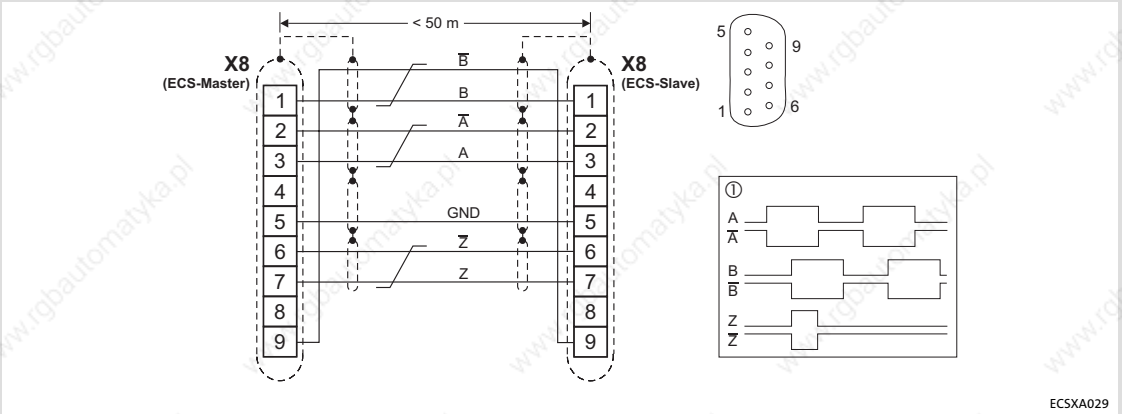

Fig. 5-22 Connection of the master frequency input/output X8 (master ↔ slave)

① Signals for clockwise rotation
Cores twisted in pairs

Assignment of plug connector X8: Sub-D 9-pole									
Pin	1	2	3	4	5	6	7	8	9
Input signal	B	$\overline{A}$	A	–	GND	$\overline{Z}$	Z	–	$\overline{B}$
Output signal	B	$\overline{A}$	A	–	GND	$\overline{Z}$	Z	–	$\overline{B}$
	0.14 mm² (AWG 26)			1 mm² (AWG 18)		0.14 mm² (AWG 26)			

► 2 to 3 slaves connected to the master:

Use the **EMF2132IB** digital frequency distributor to wire the ECS axis modules with master digital frequency cable **EYD0017AxxxxW01W01** and slave digital frequency cable **EYD0017AxxxxW01S01**.

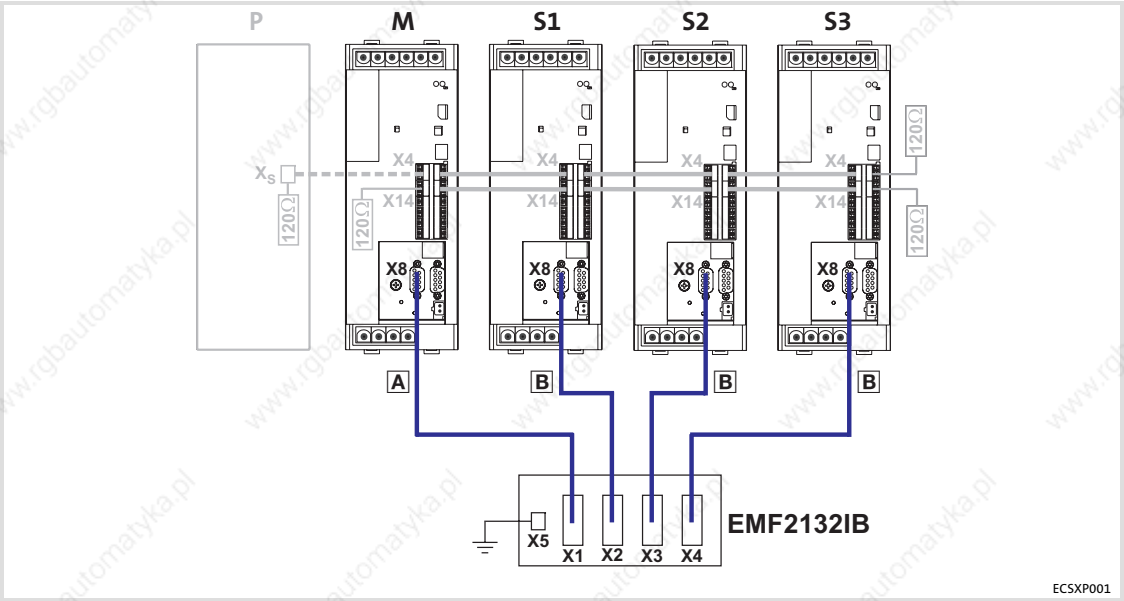

Fig. 5-23 ECS axis modules in the CAN network with EMF2132IB digital frequency distributor

p	Drive PLC or customer PLC for controlling the drive system (optional)
M	Master value of the master (ECSxS/P/A axis module)
S1...3	Slave 1, slave 2, slave 3 (ECSxS/P/A axis module)
A	EYD0017AxxxxW01W01 digital frequency cable of master
B	EYD0017AxxxxW01S01 digital frequency cable of slave

Tip!

”xxxx” in the type designation of the digital frequency cables serves as a wildcard for the specification of the cable length in decimetres.

Example: EYD0017A**0015**W01W01 → cable length = 15 dm

6 Commissioning

6.1 Before you start

Note!

- The use of a Lenze motor is assumed in this description of the commissioning steps. For details on the operation with other motors see 📖 122.
- The description is based on operation with the Lenze programs ”Drive PLC Developer Studio” (DDS) and ”Global Drive Control” (GDC). The parameters are displayed in online mode, i.e. GDC can directly access the codes of the axis module.

Prior to initial switch-on of the drive system, check the wiring for completeness, short-circuit, and earth fault:

- Power connection:
  – Polarity of the DC-bus voltage supply via terminals +UG, -UG
- Motor connection:
  – In-phase connection to the motor (direction of rotation)
- Wiring of “safe torque off” (formerly ”safe standstill”)
- Feedback system
- Control terminals:
  – Wiring adjusted to the signal assignment of the control terminals.

6.2 Commissioning steps (overview)

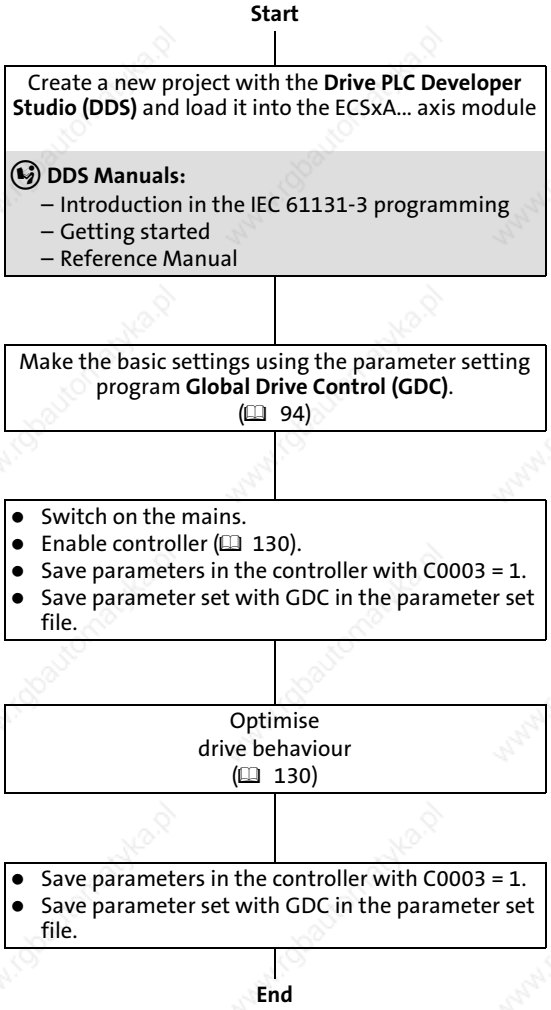

6.3 Carrying out basic settings with GDC

Note!
Follow the commissioning steps in the given order!

	Setting	Short description	Detailed information
Requirements		● Mains is switched off. (Green LED is dark, red LED is blinking) ● Controller inhibit is active. – Press the <F9> key in GDC. – X6/SI1 **or**X6/SI2 must be open (LOW). ● DDS project has been created and loaded into the ECSxA axis module. See DDS Manuals: – Introduction in the IEC 61131-3 programming – Getting started – Reference Manual	
1.	Switch on low-voltage supply.		
2.	Connect PC/laptop (with installed GDC parameter setting program) to controller.	Connection to X14 (system bus (CAN)) using EMF2177IB PC system bus adapter.	📖 138
3.	Start GDC and select the device to be set.	**Selecting a device:** Change to the online mode via the GDC tool bar with the <F4> key and select "Searching for drives" using the <F2> key. ⇨ Drive is identified and the parameter menu is opened.	GDC online help
4.	Set communication parameters according the interface used.	Comm. parameters - AIF interface X1	📖 145
		Comm. parameters - CAN bus interface X4	📖 159
		Comm. parameters - CAN bus interface X14	
5.	Set mains data.	Select the **Code list** in the GDC parameter menu and set the following codes: ● C0173 (voltage thresholds) ● C0175 (function of the charge relay) – For operation with power supply module ECSxE set C0175 = 3.	📖 96
6.	Enter motor data.	Lenze motors: Use the GDC motor assistant.	📖 98
		Motors from other manufacturers: Select **Motor/feedback system → Motor setting** in the GDC parameter menu and set the codes.	📖 122
7.	Configure holding brake.	● Not required if a holding brake is not available; *otherwise* ● set C0472/10 (speed threshold) > 0 (e. g. 1 %) for closing the holding brake.	📖 100
8.	Set feedback system.	● Lenze motors with resolvers do not require any further settings. ● Select **Motor/feedback systems → Feedback system** to set third-party resolvers and encoders in the GDC parameter menu.	📖 101
9.	Enter machine parameter.	In GDC, the codes for machine parameters such as maximum speed and ramp times can be found in the parameter menu under **Short setup → Motor setting**.	📖 119

	Setting	Short description	Detailed information
10.	Set the polarity of the digital inputs and outputs.	Select **Terminal I/O → Digital inputs/outputs** in the GDC parameter menu to set the polarity: ● C0114/x (polarity of dig. inputs X6/DI1 ... DI4) ● C0118/1 (polarity of dig. output X6/DO1)	📖 118
11.	Switch on the mains.	● Green LED is blinking and red LED is off: – Controller is ready for operation. ● Green LED is off and red LED is blinking: – An error has occurred. Eliminate the error before you continue commissioning.	

The basic settings are now completed. Continue with:

► Enable controller (📖 130).

► Save parameters in the controller with C0003 = 1.

► Save parameter set with GDC in the parameter set file.

6.4 Setting of mains data

In GDC, you can find the parameters and codes to be set in the parameter menu under **Code list**:

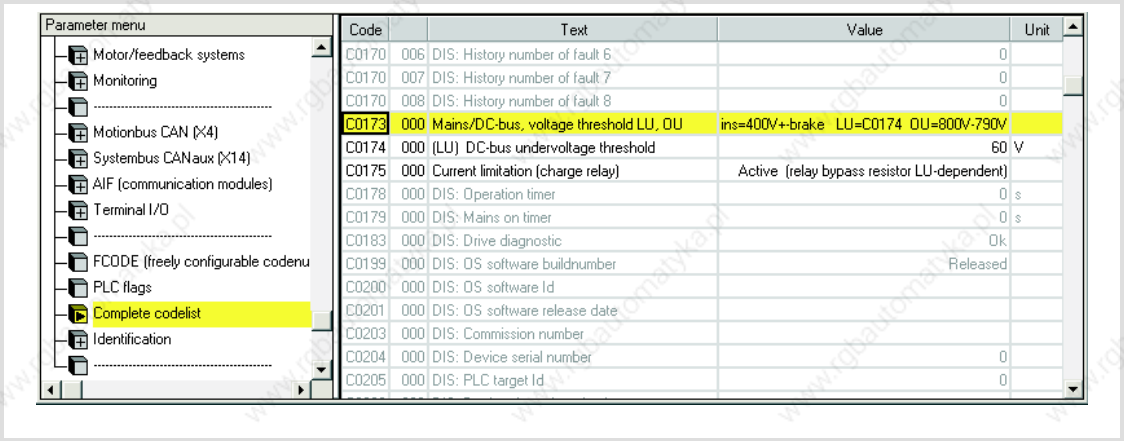

Fig. 6-1 GDC view: Network data in the code list

6.4.1 Selecting the function of the charging current limitation

The ECS axis modules are provided with a charging current limitation by means of charge resistors and charge relays. In the Lenze setting the charging current limitation is activated (C0175 = 1).

At mains connection the charge relay remains open for a while so that the charging current of the DC bus is limited by the charging resistors. When a certain voltage level has been reached, the charging resistors are short circuited by switching on (closing) the charge relay contacts.

Stop!

- ► If the DC-bus voltage is generated with an **ECSxE** power supply module, the DC bus is charged in a controlled way. Therefore, set **C0175 = 3** for the axis module (charging current limitation inactive, charging resistor short-circuited).

  If the Lenze setting has been loaded via C0002, C0175 = 3 must be set again.
- ► Cyclic switching of the mains voltage at the power supply module can overload and destroy the charging current limitation of the axis module if activated (C0175 = 1 or C0175 = 2).

  For this reason, allow a break of at least three minutes between two starting operations in case of cyclic mains switching over a longer period of time!

Code		Possible settings			IMPORTANT	
No.	Designation	Lenze/ {Appl.}	Selection			
C0175	UG-Relais Fkt	1			Charge relay behaviour with undervoltage (LU) in the DC bus.	📖 96
			1	Standard	Relay switches as a function of LU.	
			2	One Time	Relay switches when LU is exceeded for the first time and remains on.	
			3	Fixed On	Charging current limitation is inactive. ● Relay is always switched on and the charging resistors of the axis module are thus permanently jumpered. ● Setting for operation with ECSxE power supply module.	

6.4.2 Setting the voltage thresholds

Note!
All drive components in DC-bus connections must have the same thresholds!

Selection	Mains voltage	Brake unit	LU message (Undervoltage)		OU message (Overvoltage)	
C0173	Power supply module [V AC]		Setting [V DC]	Resetting [V DC]	Setting [V DC]	Resetting [V DC]
0	230	yes/no	130	275	400	390
1	400	yes/no	285	430	800	790
2	400 ... 460	yes/no	328	473	800	790
3	480	no	342	487	800	785
4	480	yes	342	487	800	785
10	230	yes/no	C0174	C0174 + 5 V	400	390
11	400 (Lenze setting)	yes/no	C0174	C0174 + 5 V	800	790
12	400 ... 460	yes/no	C0174	C0174 + 5 V	800	790
13	480	no	C0174	C0174 + 5 V	800	785
14	480	yes	C0174	C0174 + 5 V	800	785

Code		Possible settings			IMPORTANT	
No.	Designation	Lenze/ {Appl.}	Selection			
C0174	UG min	60			Undervoltage threshold of DC bus (LU)	📖 96
			15	{1 V} 342		

6.5 Entry of motor data for Lenze motors

Note!

- ► The following only describes the parameter setting for Lenze motors! (If you use a motor from another manufacturer, see 📖 122.)
- ► If the Lenze setting has been loaded via C0002, the motor data must be entered once again.
- ► In "GDC Easy", the "Input assistant for motor data" is not available. In this case, please contact your Lenze representative for the stator resistance and leakage inductance data.

Parameter setting with the "Input assistant for motor data" of the GDC

1. Go to the GDC menu bar and select the **Tool→ Motor data** menu item or click the button with the voltage divider symbol in the tool bar (rightmost in Fig. 6-2):

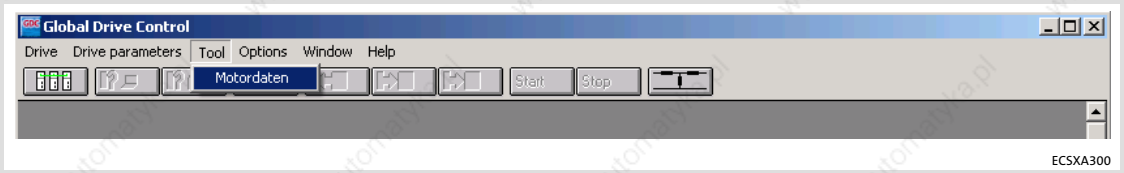

Fig. 6-2 GDC view: menu bar and tool bar

– The "Input assistant for motor data" opens:

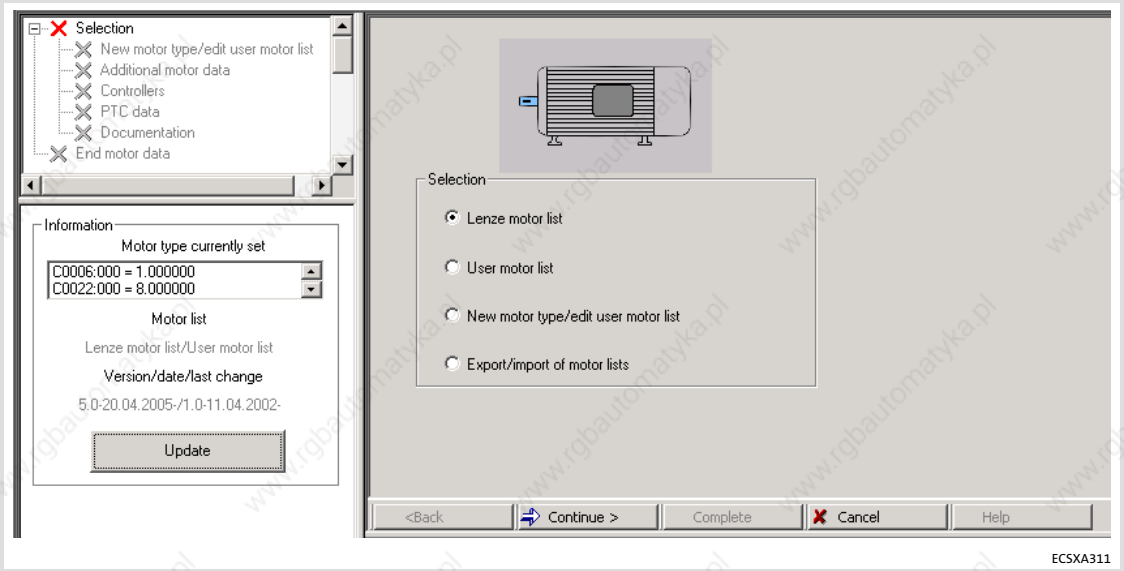

Fig. 6-3 GDC view: Selection of motor list

2. Select the ”Lenze motor list” and click the [Continue] button.

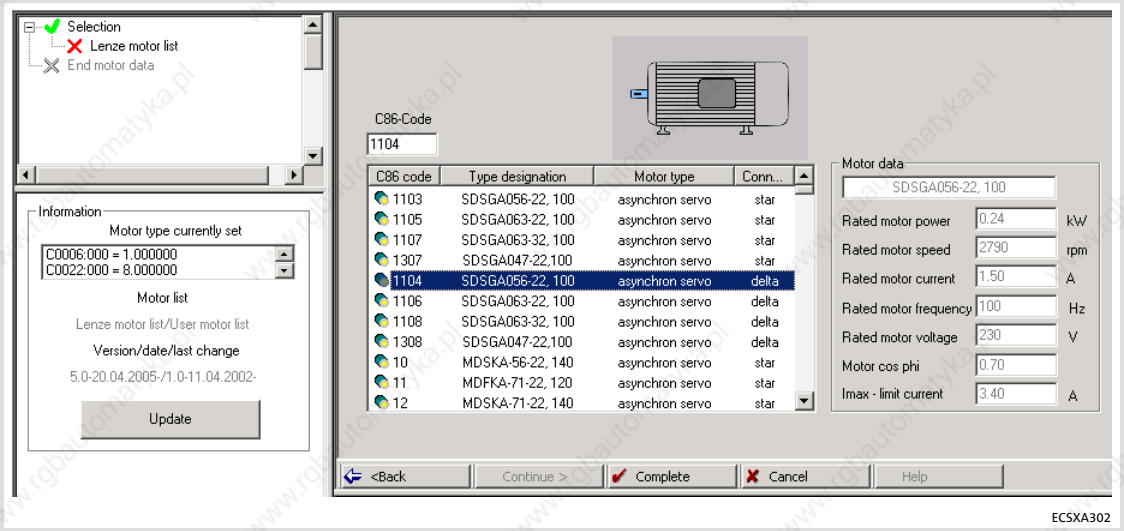

Fig. 6-4 GDC view: Motor selection

3. Select the connected motor from the list (see motor nameplate).
   – The corresponding motor data is displayed on the right in the ”Motor data” fields.
4. Click the [Complete] button.
   – The data is transferred to the controller. This process can take a few seconds and is confirmed by a message after being completed.

6.6 Holding brake configuration

Tip!
If you use a motor without a holding brake, you can skip this chapter.

In GDC, you can find the parameters and codes to be set in the parameter menu under **Complete code list**.

Code	Name	Description
C0472/10	FCODE analog [%]	Speed threshold from which the drive is allowed to output the signal ”Close brake”. ● This code refers to the maximum speed set in C0011. **Note:** Enter a value > 0 so that the brake can be opened.
C0472/11	FCODE analog [%]	Value/direction of the torque against the holding brake.

6.7 Setting of the feedback system for position and speed control

The following feedback systems can be selected for position and speed control:

- ► Resolver (📖 101)
- ► TTL incremental encoder/sin/cos encoder without serial communication (📖 104)
  – as position and speed encoder (📖 104)
  – as position encoder and resolver as speed encoder (📖 107)
- ► Absolute value encoder (Hiperface®, single-turn/multi-turn)
  – as position and speed encoder (📖 110)
  – as position encoder and resolver as speed encoder (📖 114)

The GDC contains the parameters or codes to be set in the parameter menu under **Motor/Feedb. → Feedback**:

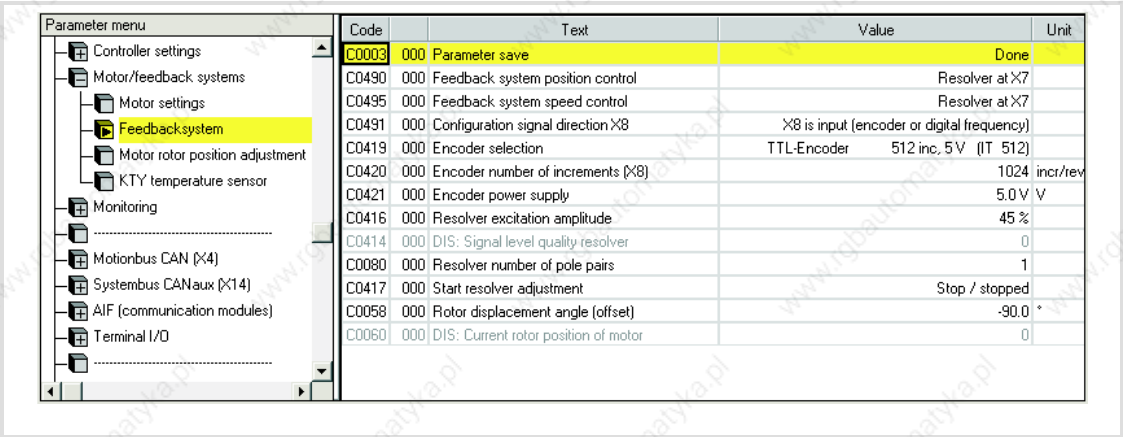

Fig. 6-5 GDC view: Commissioning of the feedback system

Note!
If the Lenze setting has been loaded via C0002, the feedback system must be reset.

6.7.1 Resolver as position and speed encoder

If a resolver is connected to X7 and used as a position and speed encoder, no settings are necessary.

Lenze setting:

- ► Resolver as position encoder: C0490 = 0
- ► Resolver as speed encoder: C0495 = 0

Codes for feedback system selection

Code		Possible settings			IMPORTANT	
No.	Designation	Lenze/ {Appl.}	Selection			
[C0490]	Feedback pos	0			Selection of feedback system for positioning control	📖 101
			0	Resolver at X7	Standard setting	
			1	TTL encoder at X8	● Sets C0495 to the same value if C0495 > 0. ● Sets C0419 = 0 (”Common”) if a different encoder type as under C0419 is set here.	
			2	SinCos encoder at X8		
			3	Absolute value encoder (single-turn) at X8		
			4	Absolute encoder (multi-turn) at X8		
[C0495]	Feedback n	0			Selection of feedback system for speed control	📖 101
			0	Resolver at X7	Standard setting	
			1	TTL encoder at X8	● Sets C0490 to the same value if C0490 > 0. ● Sets C0419 = 0 (”Common”) if a different encoder type as under C0419 is set here.	
			2	SinCos encoder at X8		
			3	Absolute value encoder (single-turn) at X8		
			4	Absolute encoder (multi-turn) at X8		

Codes for optimising the operation and display

Code		Possible settings				IMPORTANT	
No.	Designation	Lenze/ {Appl.}	Selection				
C0058	Rotor diff	-90.0				Rotor displacement angle for synchronous motors (C0095)	📖 127
			-180.0	{0.1 °}	179.9		
C0060	Rotor pos					Current rotor position; value is derived from position encoder. Therefore, it is only valid as rotor position if the position encoder settings under C0490 are identical with the settings of the speed encoder on the motor shaft under C0495. Only display	📖 124
			0	{1 inc}	2047	1 rev = 2048 inc	
[C0080]	Res pole no.	1				Number of pole pairs of resolver	
			1	{1}	10		
C0414	DIS: ResQual.					Resolver modulation Quality of the resolver excitation amplitude set under C0416 (recommendation: 0.5 ... 1.2; ideal 1.0)	📖 101
			0.00	{0,01}	1.60		

Code		Possible settings			IMPORTANT	
No.	Designation	Lenze/ {Appl.}	Selection			
[C0416]	Resolver adj.	5			Resolver excitation amplitude	📖 101
			0	100 %		
			1	80 %		
			2	68 %		
			3	58 %		
			4	50 %		
			5	45 %		
			6	40 %		
			7	37 %		
[C0417]	Resolver cor.	0			Resolver adjustment	📖 136
			0	Ready		
			1	Start adjustment		
			2	Loading default values		

6.7.2 TTL/sin/cos encoder without serial communication

If a TTL incremental encoder or a sin/cos encoder without serial communication is connected to X8 and used for position and speed control, the following setting sequence must be observed:

1. Select encoder for position and speed control.
   – Incremental encoder (TTL encoder): C0490 and C0495 = 1
   – Sin/cos encoder without serial communication: C0490 and C0495 = 2
   If X8 has been selected as output by changing C0491, X8 will be automatically reset to input through the encoder selection.

Note!
When encoders are used for position and speed control, the same feedback system will automatically be set for both control modes under C0490 and C0495. Separate feedback systems can only be selected in connection with a resolver.

2. Select encoder used.
   – Incremental encoder (TTL encoder): C0419 = 110 ... 113
   – Sin/cos encoder without serial communication: C0419 = 210 ... 213
   – Encoder used is not in the list: C0419 = 1 (”Common”)
3. When setting C0419 = 1 (”Common”) configure encoder data.

Note!
When setting **C0419 = 11x or 21x** do **not** configure encoder data.
The encoder data (C0420, C0421, C0427) is set automatically in accordance with the selection.

   – C0420 (number of increments of the encoder)
   – C0421 (encoder voltage)
   – C0427 (signal type of the encoder)
4. Save settings with C0003 = 1.

Codes for feedback system selection

Code		Possible settings			IMPORTANT	
No.	Designation	Lenze/ {Appl.}	Selection			
[C0490]	Feedback pos	0			Selection of feedback system for positioning control	📖 101
			0	Resolver at X7	Standard setting	
			1	TTL encoder at X8	● Sets C0495 to the same value if C0495 > 0. ● Sets C0419 = 0 (”Common”) if a different encoder type as under C0419 is set here.	
			2	SinCos encoder at X8		
			3	Absolute value encoder (single-turn) at X8		
			4	Absolute encoder (multi-turn) at X8		
[C0495]	Feedback n	0			Selection of feedback system for speed control	📖 101
			0	Resolver at X7	Standard setting	
			1	TTL encoder at X8	● Sets C0490 to the same value if C0490 > 0. ● Sets C0419 = 0 (”Common”) if a different encoder type as under C0419 is set here.	
			2	SinCos encoder at X8		
			3	Absolute value encoder (single-turn) at X8		
			4	Absolute encoder (multi-turn) at X8		

Codes for optimising the operation and display

Code		Possible settings		IMPORTANT	
No.	Designation	Lenze/ {Appl.}	Selection		
[C0419]	Enc. Setup	110		Encoder selection ● Selection of encoder type indicated on the nameplate of the Lenze motor. ● The encoder data (C0420, C0421, C0427) is set automatically in accordance with the selection.	📖 309 📖 104 📖 110
			0 Common		
			110 IT512-5V	Incremental encoder with TTL level	
			111 IT1024-5V		
			112 IT2048-5V		
			113 IT4096-5V		
			210 IS512-5V	SinCos encoder	
			211 IS1024-5V		
			212 IS2048-5V		
			213 IS4096-5V		
			307 AS64-8V	SinCos absolute value encoder with Hiperface® interface (single-turn) Selections 307, 308, 309 are only possible with operating system 7.0 or higher.	
			308 AS128-8V		
			309 AS256-8V		
			310 AS512-8V		
			311 AS1024-8V		
			407 AM64-8V	SinCos absolute value encoder with Hiperface® interface (multi-turn) Selections 407, 408, 409 are only possible with operating system 7.0 or higher.	
			408 AM128-8V		
			409 AM256-8V		
			410 AM512-8V		
			411 AM1024-8V		
[C0420]	Encoder const.	512		Number of increments of the encoder	📖 309 📖 104 📖 110
			1 {1 inc/rev} 8192	Sets C0419 = 0 (”common”) if the value is altered.	
[C0421]	Encoder volt	0		Encoder voltage	📖 309 📖 104 📖 110
			0 5.0 V	Sets C0419 = 0 (”common”) if the value is altered.	
			1 5.6 V		
			2 6.3 V		
			3 6.9 V		
			4 7.5 V		
			5 8.1 V		
[C0427]	Enc. signal	0		Function of the master frequency input signals on X8 (DFIN)	📖 309 📖 104 📖 110
			0 2-phase		
			1 A: speed B: direction		
			2 A or B: speed or direction		
[C0491]	X8 in/out	0		Function of X8	📖 309 📖 104 📖 110
			0 X8 is input		
			1 X8 is output		

6.7.3 TTL/sin/cos encoder as position encoder and resolver as speed encoder

A TTL incremental encoder connected to X8 or a sin/cos encoder without serial communication can be configured as a position encoder with a resolver connected to X7 being used as a speed encoder.

Observe the following setting sequence:

1. Select TTL/sin/cos encoder as position encoder.
   – Incremental encoder (TTL encoder): C0490 = 1
   – Sin/cos encoder without serial communication: C0490 = 2
   If X8 has been selected as output by changing C0491, X8 will be automatically reset to input through the encoder selection.
2. Select resolver as speed encoder.
   – C0495 = 0
3. Select encoder used.
   – Incremental encoder (TTL encoder): C0419 = 110 ... 113
   – Sin/cos encoder without serial communication: C0419 = 210 ... 213
   – Encoder used is not in the list: C0419 = 1 (”Common”)
4. When setting C0419 = 1 (”Common”) configure encoder data.

Note!
When setting **C0419 = 11x or 21x** do **not** configure encoder data.
The encoder data (C0420, C0421, C0427) is set automatically in accordance with the selection.

   – C0420 (number of increments of the encoder)
   – C0421 (encoder voltage)
   – C0427 (signal type of the encoder)
5. Save settings with C0003 = 1.

Codes for feedback system selection

Code		Possible settings			IMPORTANT	
No.	Designation	Lenze/ {Appl.}	Selection			
[C0490]	Feedback pos	0			Selection of feedback system for positioning control	📖 101
			0	Resolver at X7	Standard setting	
			1	TTL encoder at X8	• Sets C0495 to the same value if C0495 > 0. • Sets C0419 = 0 (”Common”) if a different encoder type as under C0419 is set here.	
			2	SinCos encoder at X8		
			3	Absolute value encoder (single-turn) at X8		
			4	Absolute encoder (multi-turn) at X8		
[C0495]	Feedback n	0			Selection of feedback system for speed control	📖 101
			0	Resolver at X7	Standard setting	
			1	TTL encoder at X8	• Sets C0490 to the same value if C0490 > 0. • Sets C0419 = 0 (”Common”) if a different encoder type as under C0419 is set here.	
			2	SinCos encoder at X8		
			3	Absolute value encoder (single-turn) at X8		
			4	Absolute encoder (multi-turn) at X8		

Codes for optimising the operation and display

Code		Possible settings				IMPORTANT	
No.	Designation	Lenze/ {Appl.}	Selection				
C0058	Rotor diff	-90.0				Rotor displacement angle for synchronous motors (C0095)	📖 127
			-180.0	{0.1 °}	179.9		
C0060	Rotor pos					Current rotor position; value is derived from position encoder. Therefore, it is only valid as rotor position if the position encoder settings under C0490 are identical with the settings of the speed encoder on the motor shaft under C0495. Only display	📖 124
			0	{1 inc}	2047	1 rev = 2048 inc	
[C0080]	Res pole no.	1				Number of pole pairs of resolver	
			1	{1}	10		
C0414	DIS: ResQual.					Resolver modulation Quality of the resolver excitation amplitude set under C0416 (recommendation: 0.5 ... 1.2; ideal 1.0)	📖 101
			0.00	{0,01}	1.60		

Code		Possible settings			IMPORTANT	
No.	Designation	Lenze/ {Appl.}	Selection			
[C0416]	Resolver adj.	5			Resolver excitation amplitude	📖 101
			0	100 %		
			1	80 %		
			2	68 %		
			3	58 %		
			4	50 %		
			5	45 %		
			6	40 %		
			7	37 %		
[C0417]	Resolver cor.	0			Resolver adjustment	📖 136
			0	Ready		
			1	Start adjustment		
			2	Loading default values		
[C0419]	Enc. Setup	110			Encoder selection ● Selection of encoder type indicated on the nameplate of the Lenze motor. ● The encoder data (C0420, C0421, C0427) is set automatically in accordance with the selection.	📖 309 📖 104 📖 110
			0	Common		
			110	IT512-5V	Incremental encoder with TTL level	
			111	IT1024-5V		
			112	IT2048-5V		
			113	IT4096-5V		
			210	IS512-5V	SinCos encoder	
			211	IS1024-5V		
			212	IS2048-5V		
			213	IS4096-5V		
			307	AS64-8V	SinCos absolute value encoder with Hiperface® interface (single-turn) Selections 307, 308, 309 are only possible with operating system 7.0 or higher.	
			308	AS128-8V		
			309	AS256-8V		
			310	AS512-8V		
			311	AS1024-8V		
			407	AM64-8V	SinCos absolute value encoder with Hiperface® interface (multi-turn) Selections 407, 408, 409 are only possible with operating system 7.0 or higher.	
			408	AM128-8V		
			409	AM256-8V		
			410	AM512-8V		
			411	AM1024-8V		
[C0420]	Encoder const.	512			Number of increments of the encoder	📖 309 📖 104 📖 110
			1	{1 inc/rev} 8192	Sets C0419 = 0 (”common”) if the value is altered.	

Code		Possible settings			IMPORTANT	
No.	Designation	Lenze/ {Appl.}	Selection			
[C0421]	Encoder volt	0			Encoder voltage	📖 309
			0	5.0 V	Sets C0419 = 0 (”common”) if the value is altered.	📖 104
			1	5.6 V		📖 110
			2	6.3 V		
			3	6.9 V		
			4	7.5 V		
			5	8.1 V		
[C0427]	Enc. signal	0			Function of the master frequency input signals on X8 (DFIN)	📖 309
			0	2-phase		📖 104
			1	A: speed B: direction		📖 110
			2	A or B: speed or direction		
[C0491]	X8 in/out	0			Function of X8	📖 309
			0	X8 is input		📖 104
			1	X8 is output		📖 110

6.7.4 Absolute value encoder as position and speed encoder

Danger!

For operating systems up to and including version 7.0:

Uncontrolled movements of the drive possible when absolute value encoders are used!

If an **absolute value encoder** is disconnected from the axis module during operation, a OH3-TRIP (fault no. ”0053”) occurs. If the **absolute value encoder** now is connected to X8 again and a TRIP-RESET is carried out, the drive may start up in an uncontrolled manner with a high speed and a high torque. An SD8-TRIP (fault no. ”0088”) will not occur, as would be expected.

Possible consequences:

► Death or severest injuries

► Destruction or damage of the machine/drive

Protective measures:

► If a TRIP occurs during commissioning when an **absolute value encoder** is used, check the history buffer C0168. If an SD8-TRIP (fault no. ”0088”) is at the second or third place, it is absolutely necessary to switch off and on again the supply of the control electronics (24 V supply).

If an absolute value encoder with Hiperface® interface is connected to X8 and used as position and speed encoder, the following setting sequence must be observed:

1. Select absolute value encoder as position and speed encoder.
   – Single-turn encoder: C0490 and C0495 = 3
   – Multi-turn encoder: C0490 and C0495 = 4
   If X8 has been selected as output by changing C0491, X8 will be automatically reset to input through the encoder selection.

Note!

When encoders are used for position and speed control, the same feedback system will automatically be set for both control modes. Separate feedback systems can only be selected in connection with a resolver (see code table, C0490 and C0495).

2. Select an absolute value encoder.
   – Single-turn encoder: C0419 = 307 ... 311
   – Multi-turn encoder: C0419 = 407 ... 411
   The encoder data (C0420, C0421, C0427) is set automatically in accordance with the selection.

Danger!

When absolute value encoders are used, uncontrolled movements of the drive are possible!

With **operating systems up to and including version 6.7**, the drive may start up in an uncontrolled manner with a high speed and a high torque after mains connection and controller enable.

Possible consequences:

► Death or severe injuries

► The machine/drive may be destroyed or damaged

Protective measures:

► Do not parameterise codes C0420, C0421 and C0427!

3. Save settings with C0003 = 1.

Note!

When configuring the absolute value encoder, an ”SD7” system error is activated. The error can only be reset by means of mains switching.

Codes for feedback system selection

Code		Possible settings		IMPORTANT	
No.	Designation	Lenze/ {Appl.}	Selection		
[C0490]	Feedback pos	0		Selection of feedback system for positioning control	📖 101
			0 Resolver at X7	Standard setting	
			1 TTL encoder at X8	• Sets C0495 to the same value if C0495 > 0. • Sets C0419 = 0 (”Common”) if a different encoder type as under C0419 is set here.	
			2 SinCos encoder at X8		
			3 Absolute value encoder (single-turn) at X8		
			4 Absolute encoder (multi-turn) at X8		
[C0495]	Feedback n	0		Selection of feedback system for speed control	📖 101
			0 Resolver at X7	Standard setting	
			1 TTL encoder at X8	• Sets C0490 to the same value if C0490 > 0. • Sets C0419 = 0 (”Common”) if a different encoder type as under C0419 is set here.	
			2 SinCos encoder at X8		
			3 Absolute value encoder (single-turn) at X8		
			4 Absolute encoder (multi-turn) at X8		

Codes for optimising the operation and display

Code		Possible settings		IMPORTANT	
No.	Designation	Lenze/ {Appl.}	Selection		
[C0419]	Enc. Setup	110		Encoder selection • Selection of encoder type indicated on the nameplate of the Lenze motor. • The encoder data (C0420, C0421, C0427) is set automatically in accordance with the selection.	📖 309 📖 104 📖 110
			0 Common		
			110 IT512-5V	Incremental encoder with TTL level	
			111 IT1024-5V		
			112 IT2048-5V		
			113 IT4096-5V		
			210 IS512-5V	SinCos encoder	
			211 IS1024-5V		
			212 IS2048-5V		
			213 IS4096-5V		
			307 AS64-8V	SinCos absolute value encoder with Hiperface® interface (single-turn) Selections 307, 308, 309 are only possible with operating system 7.0 or higher.	
			308 AS128-8V		
			309 AS256-8V		
			310 AS512-8V		
			311 AS1024-8V		
			407 AM64-8V	SinCos absolute value encoder with Hiperface® interface (multi-turn) Selections 407, 408, 409 are only possible with operating system 7.0 or higher.	
			408 AM128-8V		
			409 AM256-8V		
			410 AM512-8V		
			411 AM1024-8V		

Code		Possible settings			IMPORTANT	
No.	Designation	Lenze/ {Appl.}	Selection			
[C0420]	Encoder const.	512			Number of increments of the encoder	📖 309 📖 104 📖 110
			1	{1 inc/rev} 8192	Sets C0419 = 0 (”common”) if the value is altered.	
[C0421]	Encoder volt	0			Encoder voltage	📖 309 📖 104 📖 110
			0	5.0 V	Sets C0419 = 0 (”common”) if the value is altered.	
			1	5.6 V		
			2	6.3 V		
			3	6.9 V		
			4	7.5 V		
			5	8.1 V		
[C0427]	Enc. signal	0			Function of the master frequency input signals on X8 (DFIN)	📖 309 📖 104 📖 110
			0	2-phase		
			1	A: speed B: direction		
			2	A or B: speed or direction		
[C0491]	X8 in/out	0			Function of X8	📖 309 📖 104 📖 110
			0	X8 is input		
			1	X8 is output		

6.7.5 Absolute value encoder as position encoder and resolver as speed encoder

Danger!

For operating systems up to and including version 7.0:

Uncontrolled movements of the drive possible when absolute value encoders are used!

If an **absolute value encoder** is disconnected from the axis module during operation, a OH3-TRIP (fault no. ”0053”) occurs. If the **absolute value encoder** now is connected to X8 again and a TRIP-RESET is carried out, the drive may start up in an uncontrolled manner with a high speed and a high torque. An SD8-TRIP (fault no. ”0088”) will not occur, as would be expected.

Possible consequences:

► Death or severest injuries

► Destruction or damage of the machine/drive

Protective measures:

► If a TRIP occurs during commissioning when an **absolute value encoder** is used, check the history buffer C0168. If an SD8-TRIP (fault no. ”0088”) is at the second or third place, it is absolutely necessary to switch off and on again the supply of the control electronics (24 V supply).

An absolute value encoder Hiperface® interface connected to X8 can be configured as a position encoder with a resolver connected to X7 being used as a speed encoder.

Observe the following setting sequence:

1. Select absolute value encoder as position encoder.
   – Single-turn encoder: C0490 = 3
   – Multi-turn encoder: C0490 = 4
2. Select resolver as speed encoder.
   – C0495 = 0
3. Select an absolute value encoder.
   – Single-turn encoder: C0419 = 307 ... 311
   – Multi-turn encoder: C0419 = 407 ... 411
   The encoder data (C0420, C0421, C0427) is set automatically in accordance with the selection.

Danger!

When absolute value encoders are used, uncontrolled movements of the drive are possible!

With **operating systems up to and including version 6.7**, the drive may start up in an uncontrolled manner with a high speed and a high torque after mains connection and controller enable.

Possible consequences:

► Death or severe injuries

► The machine/drive may be destroyed or damaged

Protective measures:

► Do not parameterise codes C0420, C0421 and C0427!

4. Save settings with C0003 = 1.

Codes for feedback system selection

Code		Possible settings			IMPORTANT	
No.	Designation	Lenze/ {Appl.}	Selection			
[C0490]	Feedback pos	0			Selection of feedback system for positioning control	📖 101
			0	Resolver at X7	Standard setting	
			1	TTL encoder at X8	● Sets C0495 to the same value if C0495 > 0. ● Sets C0419 = 0 (”Common”) if a different encoder type as under C0419 is set here.	
			2	SinCos encoder at X8		
			3	Absolute value encoder (single-turn) at X8		
			4	Absolute encoder (multi-turn) at X8		
[C0495]	Feedback n	0			Selection of feedback system for speed control	📖 101
			0	Resolver at X7	Standard setting	
			1	TTL encoder at X8	● Sets C0490 to the same value if C0490 > 0. ● Sets C0419 = 0 (”Common”) if a different encoder type as under C0419 is set here.	
			2	SinCos encoder at X8		
			3	Absolute value encoder (single-turn) at X8		
			4	Absolute encoder (multi-turn) at X8		

Codes for optimising the operation and display

Code		Possible settings				IMPORTANT	
No.	Designation	Lenze/ {Appl.}	Selection				
C0058	Rotor diff	-90.0				Rotor displacement angle for synchronous motors (C0095)	📖 127
			-180.0	{0.1 °}	179.9		
C0060	Rotor pos					Current rotor position; value is derived from position encoder. Therefore, it is only valid as rotor position if the position encoder settings under C0490 are identical with the settings of the speed encoder on the motor shaft under C0495. Only display	📖 124
			0	{1 inc}	2047	1 rev = 2048 inc	
[C0080]	Res pole no.	1				Number of pole pairs of resolver	
			1	{1}	10		
C0414	DIS: ResQual.					Resolver modulation Quality of the resolver excitation amplitude set under C0416 (recommendation: 0.5 ... 1.2; ideal 1.0)	📖 101
			0.00	{0,01}	1.60		
[C0416]	Resolver adj.	5				Resolver excitation amplitude	📖 101
			0	100 %			
			1	80 %			
			2	68 %			
			3	58 %			
			4	50 %			
			5	45 %			
			6	40 %			
			7	37 %			
[C0417]	Resolver cor.	0				Resolver adjustment	📖 136
			0	Ready			
			1	Start adjustment			
			2	Loading default values			

Code		Possible settings			IMPORTANT	
No.	Designation	Lenze/ {Appl.}	Selection			
[C0419]	Enc. Setup	110			Encoder selection ● Selection of encoder type indicated on the nameplate of the Lenze motor. ● The encoder data (C0420, C0421, C0427) is set automatically in accordance with the selection.	📖 309 📖 104 📖 110
			0	Common		
			110	IT512-5V	Incremental encoder with TTL level	
			111	IT1024-5V		
			112	IT2048-5V		
			113	IT4096-5V		
			210	IS512-5V	SinCos encoder	
			211	IS1024-5V		
			212	IS2048-5V		
			213	IS4096-5V		
			307	AS64-8V	SinCos absolute value encoder with Hiperface® interface (single-turn) Selections 307, 308, 309 are only possible with operating system 7.0 or higher.	
			308	AS128-8V		
			309	AS256-8V		
			310	AS512-8V		
			311	AS1024-8V		
			407	AM64-8V	SinCos absolute value encoder with Hiperface® interface (multi-turn) Selections 407, 408, 409 are only possible with operating system 7.0 or higher.	
			408	AM128-8V		
			409	AM256-8V		
			410	AM512-8V		
			411	AM1024-8V		
[C0420]	Encoder const.	512			Number of increments of the encoder	📖 309 📖 104 📖 110
			1	{1 inc/rev} 8192	Sets C0419 = 0 (”common”) if the value is altered.	
[C0421]	Encoder volt	0			Encoder voltage	📖 309 📖 104 📖 110
			0	5.0 V	Sets C0419 = 0 (”common”) if the value is altered.	
			1	5.6 V		
			2	6.3 V		
			3	6.9 V		
			4	7.5 V		
			5	8.1 V		
[C0427]	Enc. signal	0			Function of the master frequency input signals on X8 (DFIN)	📖 309 📖 104 📖 110
			0	2-phase		
			1	A: speed B: direction		
			2	A or B: speed or direction		
[C0491]	X8 in/out	0			Function of X8	📖 309 📖 104 📖 110
			0	X8 is input		
			1	X8 is output		

6.8 Setting the polarity of digital inputs and outputs

The polarity can be set for each digital input and output. This determines whether the input or output is HIGH active or LOW active.

The following are available:

- ► 4 digital inputs (X6/DI1 ... DI4)
- ► 1 digital output (X6/DO1)
- ► 1 relay output (X25/BD1, BD2)

The GDC contains codes for setting the polarity of digital inputs and outputs in the parameter menu under **Terminal I/O**:

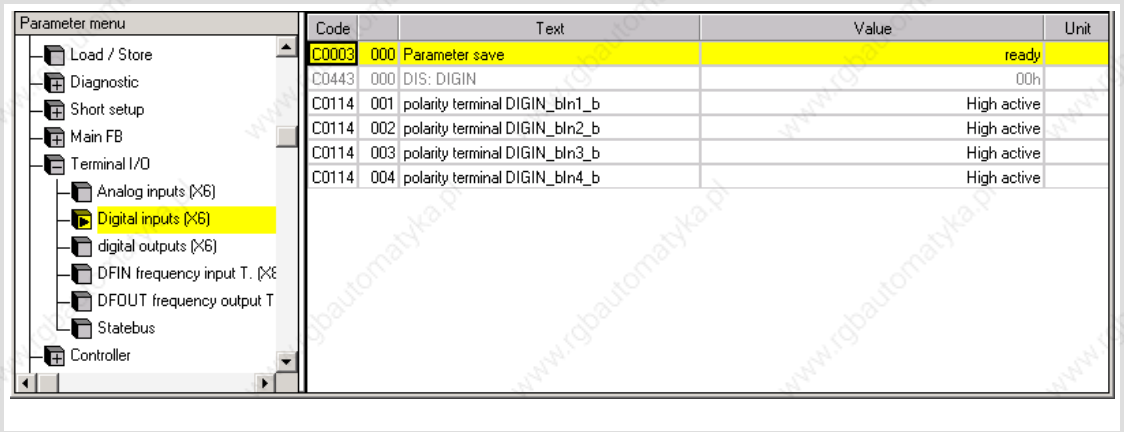

Fig. 6-6 GDC view: Setting of the polarity of digital inputs and outputs

Code		Possible settings			IMPORTANT	
No.	Designation	Lenze/ {Appl.}	Selection			
C0114					Polarity of the digital inputs	📖 118
1	DIGIN pol	0		HIGH level active	X6/DI1 (DIGIN_bIn1_b)	
2	DIGIN pol	0		HIGH level active	X6/DI2 (DIGIN_bIn2_b)	
3	DIGIN pol	0		HIGH level active	X6/DI3 (DIGIN_bIn3_b)	
4	DIGIN pol	0		HIGH level active	X6/DI4 (DIGIN_bIn4_b)	
			0	HIGH level active		
			1	LOW level active		
C0118					Polarity of the digital outputs	📖 323 📖 118
1	DIGOUT pol	0		HIGH level active	X6/DO1 (DIGOUT_bOut1_b)	
2	DIGOUT pol	0		HIGH level active	X25 (DIGOUT_bRelais_b, brake connection)	
			0	HIGH level active		
			1	LOW level active		

6.9 Entry of machine parameters

In GDC the codes for machine parameters such as maximum speed and ramp times can be found in the parameter menu under:

► **Short setup**

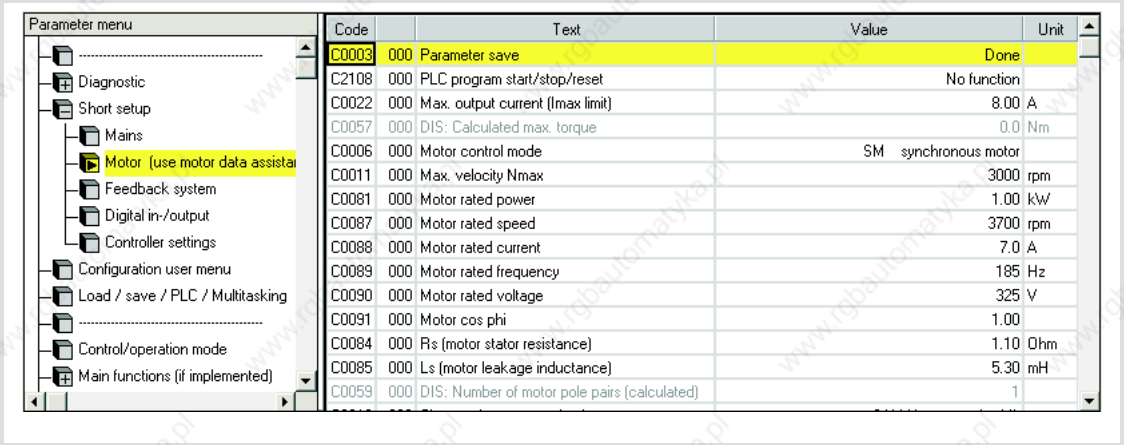

Fig. 6-7 GDC view: Machine parameters

6.10 Controller enable

- ► The controller is only enabled if enable is given by all relevant signal sources (AND operation).
- ► If the controller is not enabled (inhibited), the responsible signal source is indicated under C0183 (drive diagnostics) in the parameter menu under **Diagnostics → Current status**:

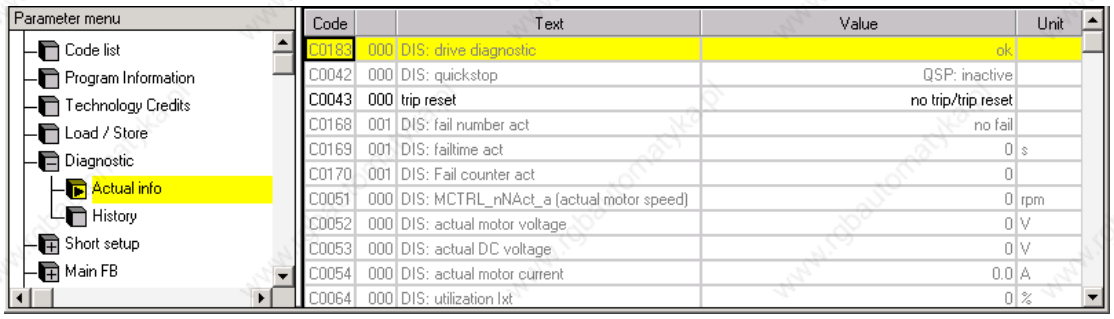

Fig. 6-8 GDC view: Diagnostic of the current operation

The following table shows the signal sources for controller enable:

Source for controller inhibit	Controller inhibit	Controller enable	Note
Terminal X6/SI1	0 ... +4 V (LOW level)	+13 ... +30 V (HIGH level)	For controller enable, X6/SI1 has to be = HIGH **and** X6/SI2 = HIGH.
Terminal X6/SI2	0 ... +4 V (LOW level)	+13 ... +30 V (HIGH level)	
C0040	C0040 = 0	C0040 = 1	
Operating module/keypad	STOP key	RUN key	Inhibiting with STOP key is only possible if the STOP key is assigned with "CINH" via C0469.
Fault	• In case of TRIP • In case of message	• No TRIP/message active • TRIP reset	For check see 📖 213.
Control word - system bus (CAN), C0135	C0135/bit 9 = 1	C0135/bit 9 = 0	GDC function keys: • <F8> key (controller enable/start) • <F9> key (controller inhibit/stop)
Fieldbus module	See Operating Instructions of the corresponding fieldbus module.		

Note!

All signal sources act like a series connection of switches which are independent of each other.

6.11 Loading the Lenze setting

Note!

After loading the Lenze setting, all parameters are set to basic setting defined by Lenze. Settings that have been adjusted before get lost during this process!

In GDC, you can find the parameters and codes to be set in the parameter menu under **Load / Save / PLC / Multitasking**:

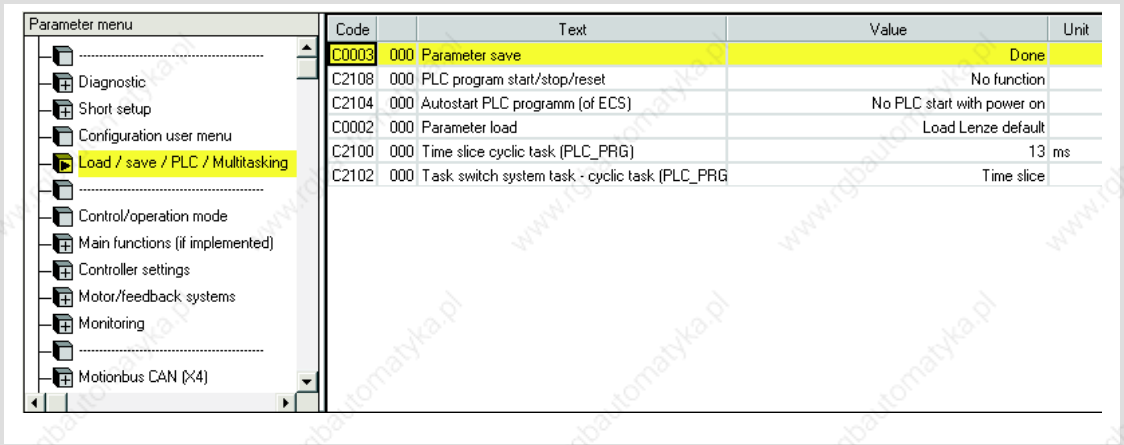

Fig. 6-9 GDC view: Load / Save / PLC / Multitasking

Setting sequence

1. Stop the PLC program: C2108 = 2
2. Load the Lenze setting: C0002 = 0
3. Continue with 3.1 **or** 3.2.

   3.1 (The 24 V-supply voltage can be switched.):

   A Switch off and on again the 24 V-supply voltage.

   B Plug the XT keypad onto the AIF interface (X1).

   3.2 (The 24 V-supply voltage cannot be switched.):

   A Plug the XT keypad onto the AIF interface (X1).

   B Reset the PLC: C2108 = 3

4. Select the communication parameters for the interfaces.
   – Automation interface X1, see 📖 145
   – CAN bus interface X4/X14, see 📖 159
5. Continue with the basic settings starting from point 5 of the table on 📖 94 .
6. Automatic start of the PLC program after mains connection: C2104 = 1
7. Start PLC program: C2108 = 1
8. Save parameter set: C0003 = 1

6.12 Operation with servo motors from other manufacturers

6.12.1 Entering motor data manually

If you operate servo motors of other manufacturers on the controller, you have to enter the motor data manually. The GDC includes the corresponding codes in the parameter menu under **Motor/Feedb. → Motor adjustment**.

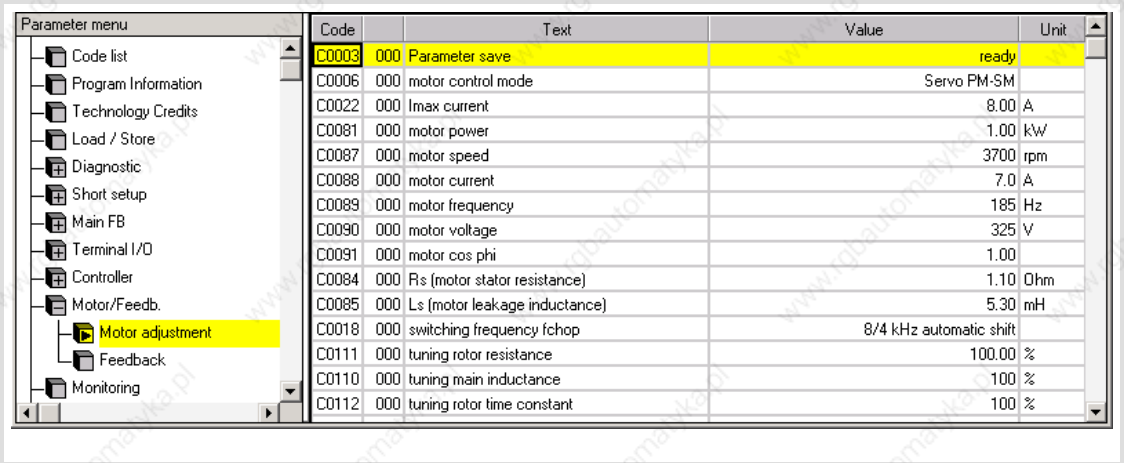

Fig. 6-10 GDC view: Manual setting of the motor data

Code		Possible settings			IMPORTANT	
No.	Designation	Lenze/ {Appl.}	Selection			
[C0006]	Op mode	1			Operating mode of the motor control	
			1	Servo PM-SM	Servo control of synchronous motors	
			2	Servo ASM	Servo control of asynchronous motors	
C0018	fchop	2			Switching frequency	
			1	4 kHz sin	4 kHz permanent PWM frequency	
			2	8/4 kHz sin	8 kHz PWM frequency with automatic derating to 4 kHz at high load	
C0022	Imax current	→			I_{max} limit	
			0	{0.01 A}	→ Device-dependent list Max. current can be gathered from the technical data.	
C0058	Rotor diff	-90.0			Rotor displacement angle for synchronous motors (C0095)	📖 127
			-180.0	{0.1 °} 179.9		
[C0080]	Res pole no.	1			Number of pole pairs of resolver	
			1	{1} 10		
[C0081]	Mot power	3.20			Rated motor power according to nameplate	
			0.01	{0.01 kW} 500.00		

Code		Possible settings					IMPORTANT	
No.	Designation	Lenze/ {Appl.}	Selection					
[C0084]	Mot Rs	1.10					Stator resistance of the motor The upper limit is device-dependent.	
			0.00	{0.01 Ω}	95.44		ECSxS/P/M/A004	
					47.72		ECSxS/P/M/A008	
					23.86		ECSxS/P/M/A016	
					11.93		ECSxS/P/M/A032	
					7.95		ECSxS/P/M/A048	
					5.96		ECSxS/P/M/A064	
[C0085]	Mot Ls	5.30					Leakage inductance of the motor	
			0.00	{0.01 mH}	200.00			
[C0087]	Mot speed	3700					Rated motor speed	
			300	{1 rpm}	16000			
[C0088]	Mot current	7.0					Rated motor current	
			0.5	{0.1 A}	500.0			
[C0089]	Mot frequency	185					Rated motor frequency	
			10	{1 Hz}	1000			
[C0090]	Mot voltage	325					Rated motor voltage	
			50	{1 V}	500			
[C0091]	Mot cos phi	1.0					cos φ of the asynchronous motor	
			0.50	{0.01}	1.00			
[C0095]	Rotor pos adj	0					Activation of rotor position adjustment of a synchronous motor C0058 shows the rotor displacement angle.	📖 127
			0	Inactive				
			1	Active				
C0110	Service Code						Fine adjustment - mutual inductance	
			50	{1 %}	200			
C0111	Service Code						Fine adjustment - rotor resistance	
			50,00	{1 %}	199,99			
C0112	Service Code						Fine adjustment - rotor time constant	
			50	{1 %}	200			
C0113	Service Code						Fine adjustment - magnetising current (I_{sd})	
			50	{1 %}	200			
C0128	Tau motor	5.0					Thermal time constant of the motor	📖 201
			0.5	{0.1 min}	25.0		For calculating the I^2 x t disconnection	
[C0418]	Test Cur.Ctrl	0					Controller adjustment:	📖 125
			0	Deactivated			Deactivate test mode	
			1	Activated			Activate test mode	

6.12.2 Checking the direction of rotation of the motor feedback system

In GDC, you can find the parameters and codes to be set in the parameter menu under **Motor/Feedback → Feedback**.

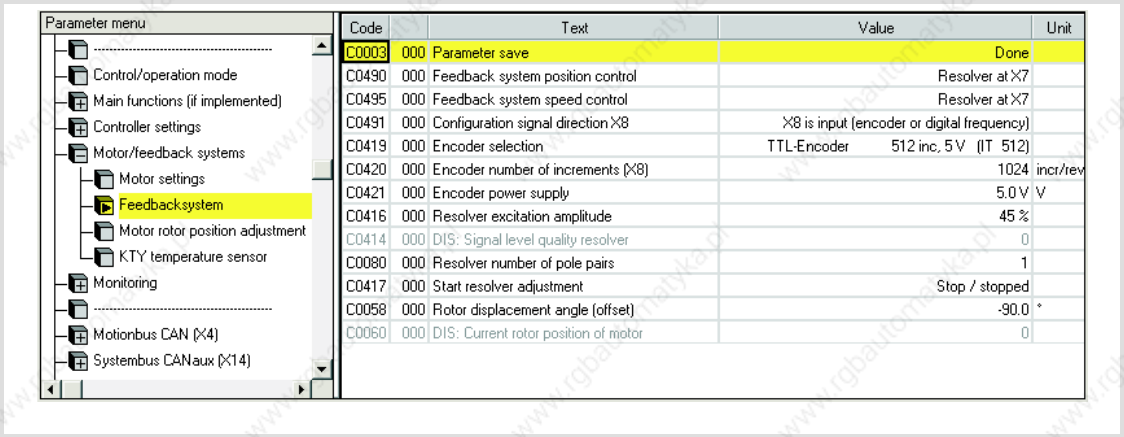

Fig. 6-11 GDC view: Feedback system

C0060 indicates the rotor position within one revolution as a numerical value between 0 and 2047. The indicated rotor position is derived from the selected position encoder (C0490).

Evaluation:

If the motor controller (resolver) is set as position encoder (C0490) and the rotor rotates in CW direction (view on the front of the motor shaft), the numerical value must rise. If the values are falling, reverse the Sin+ and Sin- connections.

Code		Possible settings			IMPORTANT	
No.	Designation	Lenze/ {Appl.}	Selection			
C0060	Rotor pos				Current rotor position; value is derived from position encoder. Therefore, it is only valid as rotor position if the position encoder settings under C0490 are identical with the settings of the speed encoder on the motor shaft under C0495. Only display	📖 124
			0	{1 inc} 2047	1 rev = 2048 inc	

6.12.3 Adjusting current controller

For an optimum machine operation, the current controller settings must be adapted to the electrical motor data.

The parameters of the current controller depend on the electrical motor data. They do not depend on mechanical data as with the speed and position control circuit. This is why the default current controller settings of the ”GDC motor data input assistant” can usually be used. A current controller adjustment is only required for third-party motors and for Lenze motors only in special cases.

Note!
If possible, adjust the current controller with the maximum current (C0022) provided for operation.

Leakage inductance and stator resistance of the motor are known:

The gain of the current controller V_p and the integral-action time of the current controller T_n can be calculated by approximation:

Current controller gain (V_p)	Integral-action time of the current controller (T_n)
$V_p = \frac{L1_S}{250\ \mu s}$	$T_n = \frac{L1_S}{R1_S}$

$L1_S$ Motor leakage inductance
$R1_S$ Motor stator resistance

Note!
Depending on the leakage inductance of the motor, the calculated values can be outside the adjustable range. In this case
► set a lower gain and a higher integral-action time;
► adjust the current controller metrologically (📖 126).

For applications with high current controller dynamics the pilot control of the current controller outputs can be activated with C0074 (C0074 = 1). For this, it is vital to enter the correct values for the stator resistance (C0084) and leakage inductance (C0085).These can be obtained from the data sheet of the motor used!

Leakage inductance and stator resistance of the motor are not known:

The current controller can be optimised metrologically with a current probe and an oscilloscope. For this, a test mode is available in which the current C0022 x √2 flows in phase U after controller enable.

Stop!

Avoid damage to the motor and machine

- ► During the current controller adjustment, the motor must be freely rotatable.
- ► The test current must not exceed the maximum permissible motor current.
- ► Always adjust the current controller at a switching frequency of 8 kHz.

Observe the current step in phase U to adjust the current controller.

Setting sequence

1. Select 8 kHz as switching frequency (C0018 = 2).
2. Select the test current under C0022:
   – Start with a low current value, e.g. half the rated motor current.
3. Activate the test mode with C0418 = 1.
4. Enable the controller. (📖 120)
   – Adjust the synchronous motor.
   – The asynchronous motor remains at standstill.
5. Enable and inhibit the controller several times in a row changing the current controller gain (C0075) and the current controller adjustment time (C0076) such that the current characteristic is free of harmonics.
6. After the adjustment has been completed, deactivate the test mode with C0418 = 0.
7. If required, change the switching frequency under C0018.

6.12.4 Effecting rotor position adjustment

Note!

Resolver / absolute value encoder with Hiperface® interface

- ► If the rotor zero phase is not known, the rotor position only has to be adjusted once during commissioning.
- ► For multi-turn absolute value encoders, the traversing range must be within the display range of the encoder (0 ... 4095 revolutions) if the traversing range is limited.

TTL incremental encoder / sin/cos encoder with zero track

- ► If these encoder types are used for the operation of synchronous motors, the rotor position must be adjusted every time the low-voltage supply is switched on.

The rotor position must be adjusted if:

- ► A servo motor from another manufacturer is operated on the controller.
- ► Another encoder has been mounted subsequently.
- ► A defective encoder has been replaced.

The rotor position can only be adjusted if:

- ► The resolver is polarised correctly.
- ► The current controller has been adjusted.

The GDC contains the parameters or codes to be set on the parameter menu under **Motor/Feedb. → Rotor position adjustment**:

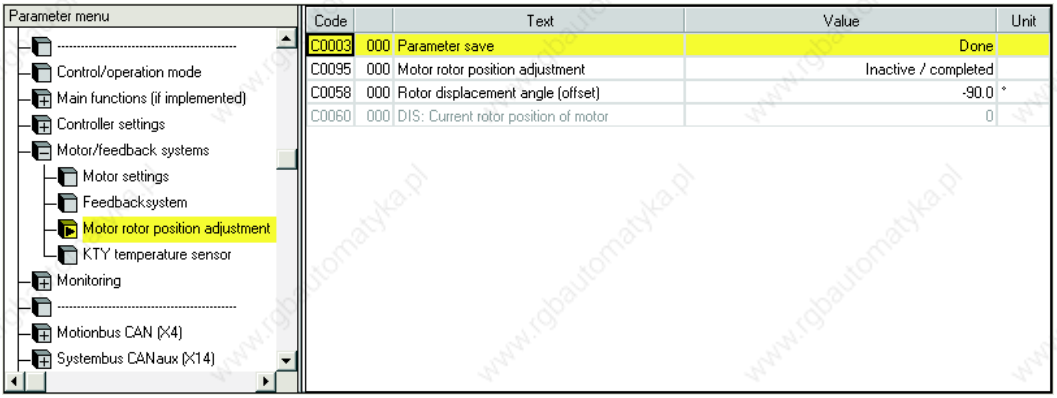

Fig. 6-12 GDC view: Commissioning of the feedback system

Setting sequence

1. Inhibit controller. (📖 120)
   – Press <F9> key in GDC.
   – Green LED is blinking, red LED is off
2. Unload motor mechanically.
   – Disconnect motor from gearbox or machine.
   – Where required, remove toothed lock washers, gear wheels, etc. from the motor

shaft.
– Where required, support holding torques held by a mounted motor brake by means of retainers.

3. Deactivate ”Safe torque off” (📖 69) so that the motor can be energised during rotor position adjustment.
   – X6/SI1 = HIGH
   – X6/SI2 = HIGH
4. Open holding brake (if available).
5. Activate rotor position adjustment with C0095 = 1.
6. Enable controller. (📖 120)
   – Press <F8> key in GDC.
   The rotor position adjustment program of the controller is started:
   – The rotor rotates half a revolution in 16 steps (for resolver with 1 pole pair: 180° electrically ≙ 180° mechanically).
   – After one revolution, C0095 is reset to ”0”.
   – The rotor zero phase is stored under C0058. (For absolute value encoders (Hiperface®, single-turn/multi-turn) at X8, C0058 is always ”0”.)

Danger!

Uncontrolled drive movements after an Sd7 fault with absolute value encoders

If absolute value encoders are used and the rotor position adjustment is completed with the fault message ”Sd7” (📖 222), the rotor position could not be assigned to the feedback system. In this case, the drive may carry out uncontrolled movements after controller enable.

Possible consequences:

► Death or severe injuries

► The machine/drive may be destroyed or damaged

Protective measures:

► Repeat rotor position adjustment (starting with step 1).

► Check wiring and interference immunity of the encoder at X8.

7. Inhibit controller. (📖 120)
   – Press <F9> key in GDC.
   – Green LED is blinking, red LED is off
8. Save the data determined by the controller with C0003 = 1.

Tip!

The values for C0058 and C0095 are only displayed in GDC if you place the bar cursor on them and read back the code using function key <F6>.

Code		Possible settings				IMPORTANT	
No.	Designation	Lenze/ {Appl.}	Selection				
C0058	Rotor diff	-90.0				Rotor displacement angle for synchronous motors (C0095)	📖 127
			-180.0	{0.1 °}	179.9		
[C0095]	Rotor pos adj	0				Activation of rotor position adjustment of a synchronous motor C0058 shows the rotor displacement angle.	📖 127
			0	Inactive			
			1	Active			

6.13 Optimising the drive behaviour after start

For applications with high current controller dynamics, the pilot control for the current controller can be adjusted under C0074:

Code		Possible settings		IMPORTANT	
No.	Designation	Lenze/ {Appl.}	Selection		
C0074	Dynamics	0		Pilot control of the current controller for higher dynamics	📖 125
			0 Normal		
			1 Enhanced		

6.13.1 Speed controller adjustment

- ► The speed controller can only be set correctly when the system constellation has been completed.
- ► Please note that the input and output variables of the speed controller are scaled:
  - – Input: scaling to n_{max} (C0011)
  - – Output: scaling to I_{max} (C0022)
- ► Hence, C0011 and C0022 have a direct impact on the proportional gain of the speed controller (C0070).
- ► The speed controller can only be optimally adjusted if
  - – the current controller is set correctly.
  - – the time constant for the actual speed value filter is not set too high (C0497).
  - – the axis module is appropriately connected to PE so that no noisy speed and current signals occur.
  - – there are as few as possible elastic or loose connections between drive and load.
- ► The speed controller is designed as an ideal PID controller.

In GDC, you can find the codes for adjusting the speed controller in the parameter menu under **Controller settings → Speed/position**.

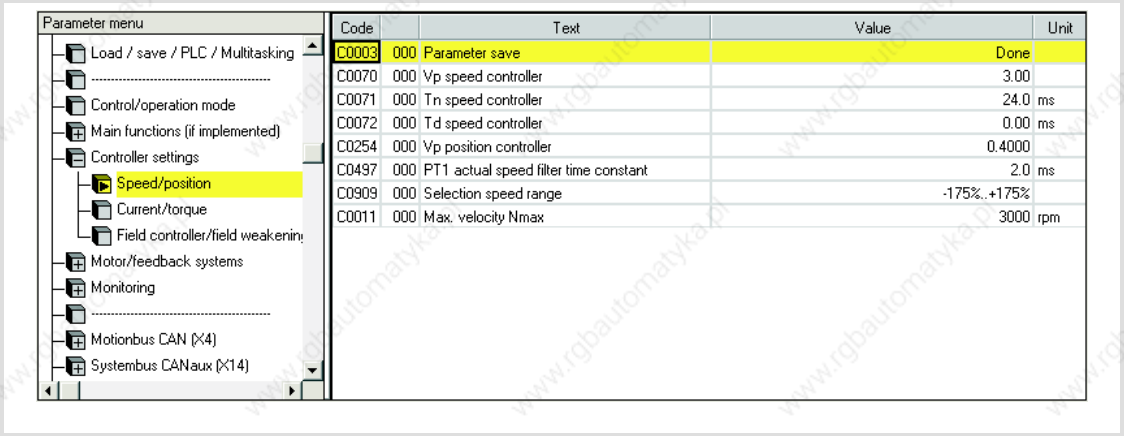

Parameter setting

► Via C0070 you set the proportional gain (V_{pn}):
– Enter approx. 50 % of the speed setpoint (100 % = 16384 = n_{max}).
– Increase C0070 until the drive becomes instable (pay attention to engine noises).
– Reduce C0070, until the drive runs stable again.
– Reduce C0070 to approx. half the value.

Code		Possible settings				IMPORTANT	
No.	Designation	Lenze/ {Appl.}	Selection				
C0070	Vp speedCTRL	3.0				Proportional gain of speed controller (V_{pn})	📖 130
			0.00	{0.01}	127.99		

► The reset time (T_{nn}) is set via C0071:
– Reduce C0071 until the drive becomes instable (pay attention to engine noises).
– Increase C0071, until the drive runs stable again.
– Increase C0071 to approx. the double value.

Code		Possible settings				IMPORTANT	
No.	Designation	Lenze/ {Appl.}	Selection				
C0071	Tn speedCTRL	24.0				Reset time - speed controller (T_{nn})	📖 130
			1.0	{0.5 ms}	6000.0		

► The derivative gain (T_{dn}) is set via C0072:
– Increase C0072 during operation until an optimal control mode is reached.

Code		Possible settings				IMPORTANT	
No.	Designation	Lenze/ {Appl.}	Selection				
C0072	Td speedCTRL	0.0				Derivative gain of speed controller (T_{dn})	📖 130
			0.0	{0.1 ms}	32.0		

► The proportional gain (V_{pn}) can be altered by the PLC program via *MCTRL_nNAdapt_a*):
– V_{pn} = *MCTRL_nNAdapt_a* [%] × C0070
– Default: *MCTRL_nNAdapt_a* = 100 % ⇨ V_{pn} = 100 % × C0070 = C0070

Signal edge

If the drive operates with the maximum torque, the speed controller operates within the limitation.

► The drive cannot follow the speed setpoint.

► *MCTRL_bMMax_b*is set to TRUE.

Setting integral action component

For selecting defined starting values for the torque, the integral component of the speed controller can be set externally (e.g. when using the brake control).

- *MCTRL_bILoad_b* = TRUE
  - The speed controller accepts the value defined at *MCTRL_nISet_a* to its integral action component.
  - The value at *MCTRL_nISet_a* acts as a torque setpoint for the motor control.
- *MCTRL_bILoad_b* = FALSE
  - The function is switched off.

6.13.2 Adjustment of field controller and field weakening controller

Stop!

► Field weakening operation is only possible with asynchronous motors.

► The field weakening reduces the available torque.

To optimise the machine operation during field weakening, you can set the field controller and the field weakening controller accordingly.

► Field weakening occurs if the maximum output voltage of the controller is reached with rising speed and cannot be increased further.

► The maximum possible output voltage depends on
– the DC-bus voltage (mains voltage).
– the voltage reduction through the controller.
– the voltage drop at the mains choke.

► Practical values for the voltage drop under the influence of mains choke and inverter are between 6 ... 10 %.

$$\text{Max. output voltage [V]} = \text{mains voltage [V]} - \text{voltage drop [\%]}$$

In GDC, you can find the codes for adjusting the field controller/field weakening controller in the parameter menu under **Controller settings → Field controller/field weakening controller**:

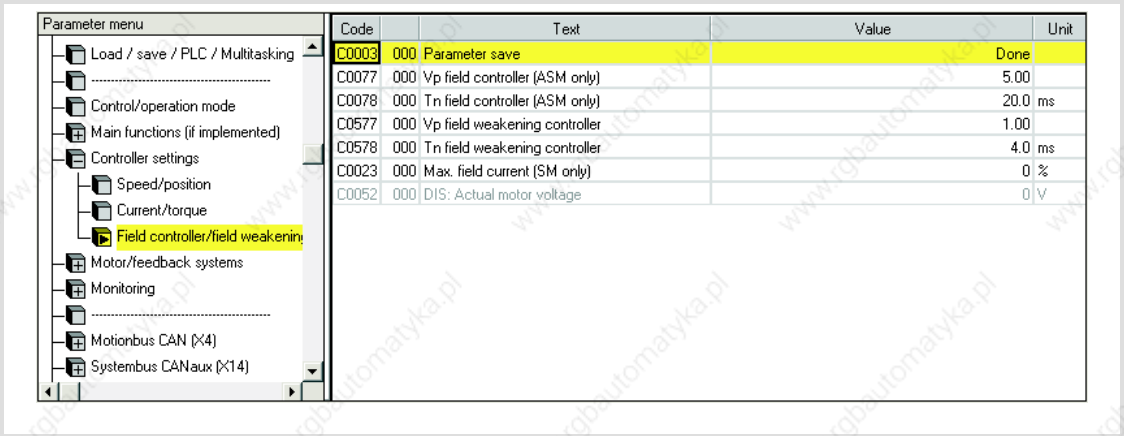

Fig. 6-13 GDC view: Field controller / field weakening controller adjustment

6.13.2.1 Adjusting the field controller

The field controller settings depend on the motor data.

Setting sequence

1. Stop the PLC program: C2108 = 2
   – As of operating system version 7.0 (see nameplate), this is no longer necessary, because C0006 (see 2.) can also be written when the PLC program is running!
2. Set motor control for asynchronous motors: C0006 = 2
   – The motor nameplate data must be entered correctly!
3. Read rotor time constant T_r (C0083).
4. Read magnetising current I_d (C0092).
5. Calculate field controller gain V_{pF} and enter in C0077.

$$V_{pF} = \frac{T_r\,(C0083) \cdot I_d\,(C0092)}{875\ \mu s \cdot I_{max}}$$

I_{max} Maximum current of axis module

6. Enter rotor time constant T_r as field controller integral-action time T_{nF} in C0078.

6.13.2.2 Field weakening controller adjustment

- ► The field weakening controller determines the speed performance of the asynchronous motor in the field weakening range.
- ► The field weakening controller can only be set correctly when the system constellation has been completed and is under load.

Note!

An excessive value of I_{max} (C0022) can cause a malfunction of the drive in the field weakening range of the asynchronous motor. For this reason, the current is limited in terms of speed in the field weakening range. The limitation has a 1/n characteristic and is derived from the motor parameters.

The limitation can be adjusted with the stator leakage inductance (C0085):

- ► Low values cause a limitation at higher speeds.
- ► Higher values cause a limitation at lower speeds.

Setting sequence:

1. Set gain V_p: C0577 = 0.01 ... 0.99
   – V_p must not be ”0”!
2. Set integral-action time T_n: C0578 = 1 ... 40 ms
3. Select a speed setpoint so that the motor is operated in the field weakening range.
4. Observe the speed curve
   – If the speed takes an irregular course, the field weakening controller must be readjusted.
   – The field weakening controller must be provided with a distinct integral action.

6.13.3 Resolver adjustment

For resolver adjustment, mainly component tolerances of the resolver evaluation are compensated in the device. A resolver error characteristic is not included.

The resolver adjustment

- ► is required if the speed characteristic is unstable.
- ► is carried out by C0417 = 1 while the motor is idling.
- ► is started after controller enable has been effected. It stops automatically after 16 shaft revolutions by selecting a setpoint or by manual rotation in the inhibited state (X6/SI1 or X6/SI2 = LOW).

If it is not possible to adjust the resolver (due to a fault or a defective cable), the original adjustment values can be restored with C0417 = 2.

The GDC contains the parameters or codes to be set in the parameter menu under **Motor/Feedb. → Feedback**:

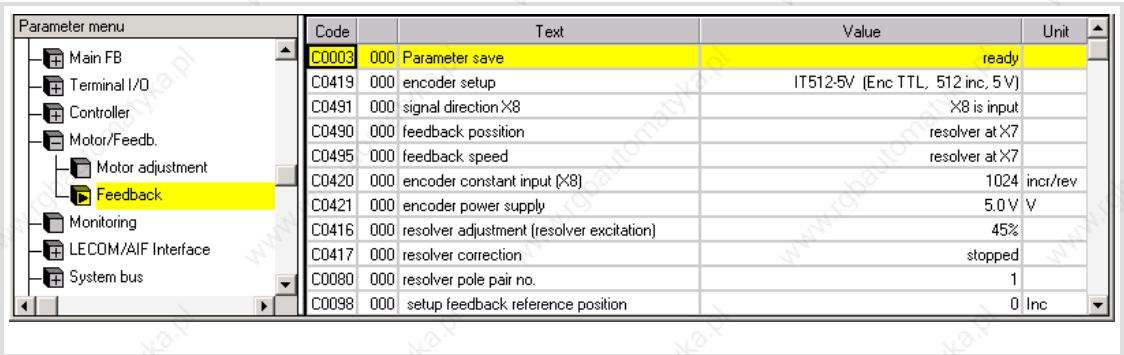

Fig. 6-14 GDC view: Commissioning of the feedback system

7 Parameter setting

7.1 General information

- Controllers and power supply modules can be adapted to your application by setting the parameters. A detailed description of the functions can be found in the chapter ”Commissioning” (📖 92).
- The parameters for the functions are stored in numbered codes:
  - The codes are marked in the text with a ”C”.
  - The code list in the appendix (📖 359) provides a quick overview of all codes. The codes are sorted in numerical ascending order, thus serving as a ”reference book”.

Parameter setting with keypad XT or PC/laptop

Detailed information on parameter setting with the keypad XT can be found in the following chapters.

Detailed information ...

on parameter setting with a PC/laptop can be found in the documentation on the parameter setting and operating program ”Global Drive Control” (GDC).

In addition to parameter setting, the keypad XT or the PC/laptop can be used to:

- Control the controller (e. g. inhibiting or enabling)
- Select the setpoints
- Display operating data
- Transfer of parameter sets to other controllers (only with PC/laptop).

Parameter setting with a bus system

Detailed information ...

on parameter setting with a bus system can be found in the documentation on the communication module to be used (📖 429).

7.2 Parameter setting with ”Global Drive Control” (GDC)

With the ”Global Drive Control” (GDC) parameterisation and operating program, Lenze provides a plain, concise and compatible tool for the configuration of your application-specific drive task with the PC or laptop:

- ► The GDC input assistant offers a comfortable motor selection.
- ► The menu structure supports the commissioning process by its clear structuring.

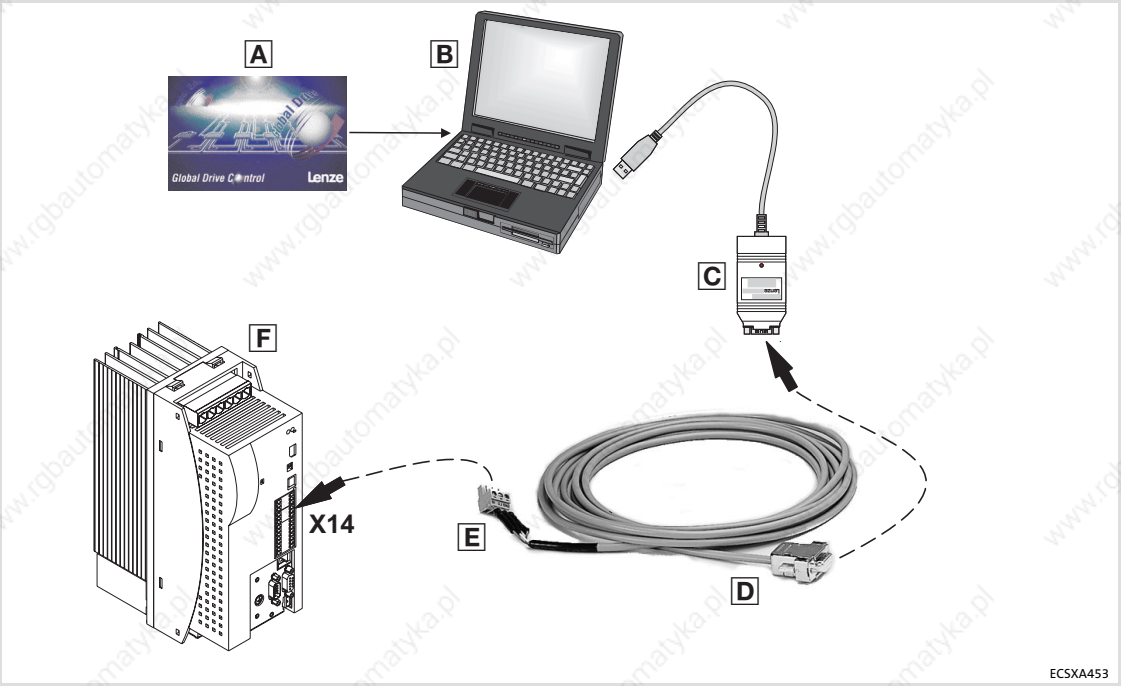

Fig. 7-1 Using the GDC

- A Lenze parameter program ”Global Drive Control” (GDC)
- B PC or laptop
- C PC system bus adapter (EMF2173IB/EMF2177IB) with connecting cable
- D Sub-D plug with 3-pole cable
- E 3-pole plug (CAG – CAL – CAH) from ECSZA000X0B connector set
- F ECSxS/P/M/A axis module

More detailed information ...

is given in the documentation on the parameter setting and operating program **Global Drive Control (GDC)**.

7.3 Parameter setting with the XT EMZ9371BC keypad

The keypad is available as accessories.
A complete description is given in the documentation on the keypad.

7.3.1 Connecting the keypad

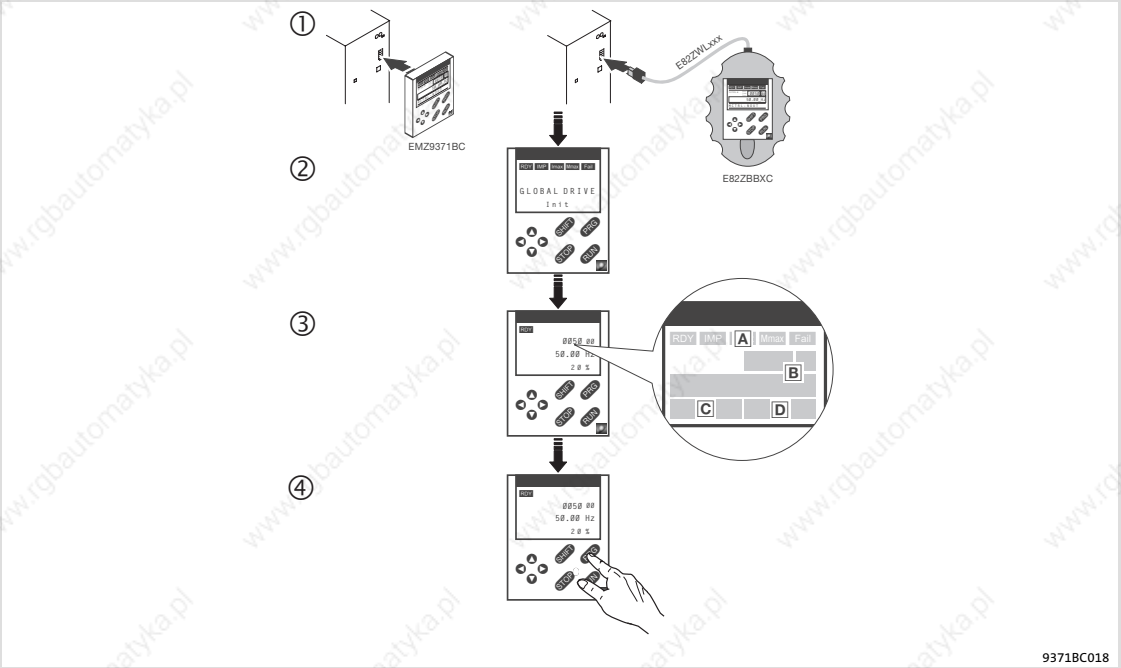

① Connect the keypad to the AIF interface (X1) of the axis module/power supply module.
It is possible to connect/disconnect the keypad during operation.
② As soon as the keypad is supplied with voltage, it carries out a short self-test.
③ The operation level indicates when the keypad is ready for operation:
A Current status of the axis module/power supply module
B Code number, subcode number, and current value
C Active fault message or additional status message
D Current value in % of the status display defined under C0004
④ PRG must be pressed to leave the operation level.

7.3.2 Description of the display elements

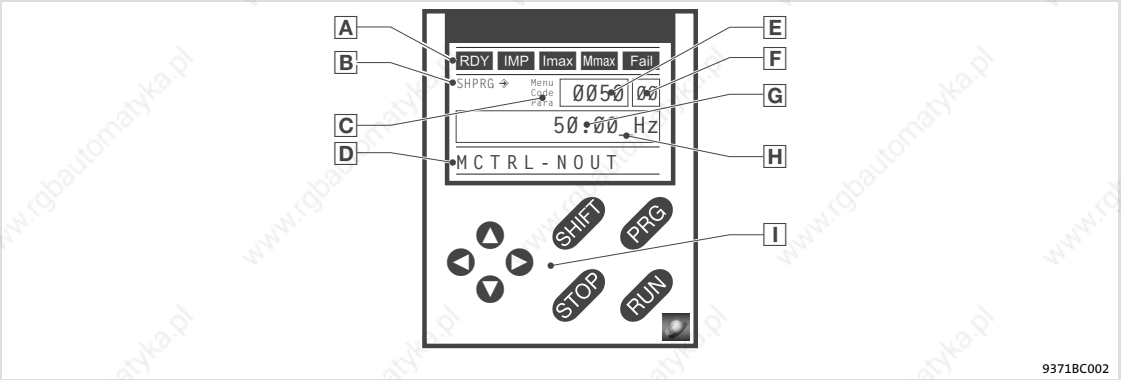

Fig. 7-2 Keypad front view

A	**Status displays**		
	Display	**Meaning**	**Explanation**
	RDY	Ready for operation	
	IMP	Pulse inhibit active	Power outputs inhibited
	Imax	Adjusted current limitation is exceeded in motor mode or generator mode	
	Mmax	Speed controller 1 within its limitation	• Drive is torque-controlled • Only active for operation with Lenze devices of the 9300 series!
	Fail	Active fault	
B	**Parameter acceptance**		
	Display	**Meaning**	**Explanation**
	→	Parameter is accepted immediately	The device immediately operates with the new parameter value.
	SHPRG →	The parameter must be confirmed with SHIFT PRG	The device operates with the new parameter value after being confirmed.
	SHPRG	When the controller is inhibited, the parameter must be confirmed with SHIFT PRG	The device operates with the new parameter value after the controller has been released again.
	None	Display parameters	Cannot be changed.
C	**Active level**		
	Display	**Meaning**	**Explanation**
	Menu	Active menu level	• Selection of main menu and submenus • No menu for ECSxE power supply module
	Code	Active code level	Selection of codes and subcodes
	Para	Active parameter level	Change of parameters in the codes or subcodes
	None	Active operating level	Display of operating parameters
D	**Short text**		
	Display	**Meaning**	**Explanation**
	Alphanumerical	Contents of the menus, meaning of the codes and parameters	
		Display of C0004 in % and the active fault in the operating level	

E	**Number**		
	Active level	**Meaning**	**Explanation**
	Menu level	Menu number	• Display is only active when operating Lenze devices of the 8200 vector or 8200 motec series. • No menu for ECSxE power supply module
	Code level	Four-digit code number	
F	**Number**		
	Active level	**Meaning**	**Explanation**
	Menu level	Submenu number	• Display is only active when operating Lenze devices of the 8200 vector or 8200 motec series. • No menu for ECSxE power supply module
	Code level	Two-digit subcode number	
G	**Parameter value**		
	Parameter value with unit		
H	**Cursor**		
	The figure over the cursor can be changed directly in the parameter level.		
I	**Function keys**		
	For description see the following table.		

7.3.3 Description of the function keys

Note!

Key combinations with SHIFT:

Press SHIFT and keep it pressed, then press second key in addition.

Key	Function			
	Menu level [1]	**Code level**	**Parameter level**	**Operating level**
PRG		Change to parameter level	Change to operating level	Change to code level
SHIFT PRG	Load predefined configurations in the menu "Short setup" [2]		Accept parameters when SHPRG ⇒ or SHPRG is displayed	
▲ ▼	Change between menu items	Change code number	Change figure over cursor	
SHIFT ▲ SHIFT ▼	Quick change between menu items	Quick change of code number	Quick change of figure over cursor	
▶ ◀	Change between main menu, submenus and code level		Cursor to the right Cursor to the left	
RUN	Cancel function of STOP key, the LED in the key goes out.			
STOP	Inhibit the controller, LED in the key lights up.			
	Reset fault (TRIP reset): 1. Remove cause of malfunction 2. Press STOP 3. Press RUN			

1) No menu for ECSxE power supply module
2) Only active when operating Lenze devices of the 8200 vector or 8200 motec series.

7.3.4 Changing and saving parameters

All parameters for the axis module/power supply module parameterisation or monitoring are stored in codes. The codes are numbered and marked with a ”C” in the documentation. Some codes store the parameters in numbered ”subcodes” to provide a clear structure for parameter setting (e.g. C0517 user menu).

Stop!

Your settings have an effect on the current parameters in the main memory. You must store your settings as a parameter set to prevent that they will get lost when switching the mains!

Step			Keys	Action
1.	Select menu		▲ ▼ ▶ ◀	Select the desired menu with arrow keys.
2.	Change to code level		▶	Display of first code in the menu
3.	Select code or subcode		▼ ▲	Display of the current parameter value
4.	Change to parameter level		PRG	
5.	If SHPRG is displayed, inhibit controller		STOP	The drive is coasting.
6.	Change parameter			
		A	▶ ◀	Move cursor under the digit to be changed
		B	▼ ▲	Change digit
			SHIFT ▼ SHIFT ▲	Change digit quickly
7.	Accept changed parameter			
	Display SHPRG or SHPRG →		SHIFT PRG	Confirm change to accept parameter Display ”OK”
	Display →		-	The parameter was accepted immediately.
8.	If necessary, enable controller		RUN	The drive should be running again.
9.	Change to code level			
		A	PRG	Display of operating level
		B	PRG	Display of the code with changed parameters
10.	Change further parameters			Restart the ”loop” at step 1. or step 3.
11.	Save changed parameters			
		A	▲ ▼ ▶ ◀	Select Code C0003 ”PAR SAVE” in the menu ”Load/Store”
		B	PRG	Change to parameter level Display ”0” and ”Ready”
	Select parameter set in which the parameters are to be saved permanently	C	▶	Save as parameter set 1: ⇨ set ”1” ”Save PS1”
		D	SHIFT PRG	When ”OK” is displayed, the settings are permanently saved.
12.	Change to code level			
		A	PRG	Display of operating level
		B	PRG	Display C0003 ”PAR SAVE”

7.3.5 Menu structure

For easy operation, the codes are clearly arranged in function-related menus:

Main menu	Submenu	Description
Display	**Display**	
User menu		**Codes defined under C0517**
Code list		**All available codes**
User code list		**List of application-specific codes**
Load / Store		**Parameter set management** Parameter set transfer, restore delivery state
Multitasking		
Diagnostic		**Diagnostics**
	Actual info	Display codes for drive monitoring
	History	Fault analysis with history buffer
SystemBlocks		**Configuration of the main function blocks**
	MCTRL	Motor control
	DCTRL	Internal control
Terminal I/O		**Assigning inputs and outputs to internal signals**
	AIN1	Analog input 1
	DIGIN	Digital inputs
	DIGOUT	Digital outputs
	DFIN	Digital frequency input
	DFOUT	Digital frequency output
Controller		**Configuration of internal control parameters**
	Speed	Speed controller
	Current	Current controller or torque controller
	Phase	Phase controller
	Field	Field controller
	Field weak	Field weakening controller
Motor/Feedb.		**Motor data input, configuration of speed feedback**
	Motor adj	Motor data
	Feedback	Configuration of feedback systems
Monitoring		**Configuration of monitoring functions**
LECOM/AIF		**Configuration of operation with communication modules**
	LECOM A/B	Serial interface
	AIF interface	Process data
	Status word	Display of status words

Main menu	Submenu	Description
Display	**Display**	
System bus [1]		**System bus/MotionBus (CAN) configuration**
	Management	CAN communication parameters
	CAN-IN1	CAN object 1
	CAN-OUT1	
	CAN-IN2	CAN object 2
	CAN-OUT2	
	CAN-IN3	CAN object 3
	CAN-OUT3	
	Status word	Display of status words
	Sync.manag.	
	Diagnostics	CAN diagnostics
FCODE		**Configuration of free codes**
Identify		**Identification**
	Drive	Software version of basic device
	Op Keypad	Software version of XT keypad

[1] For **ECSxS/P/M...** modules, the MotionBus (CAN) configuration is made on the ”System bus” menu level!

8 AIF interface (X1) configuration

With a corresponding fieldbus module (e.g. 2175) the AIF interface X1 of the ECSxA... axis module can be used as an additional system bus interface.

Note!

If the fieldbus module plugged on the AIF interface X1 and the integrated system bus interface are connected to the **same** system bus network, ensure that **different** CAN addresses and **different** identifiers are set for the interfaces!

Tip!

Changes of the CAN baud rate, the CAN addresses and the identifiers for PDOs are only accepted after a reset node.

A reset node can be executed by

► New mains connection

► Reset-node command by NMT command.

► Reset-node command via the SB **AIF_IO_Management** (📖 231)

8.1 CAN baud rate

In order that communication can be established via the system bus, all nodes must use the same baud rate for the data transmission.

► The baud rate is configured via code C2351:

Code		Possible settings		IMPORTANT
No.	Name	Lenze/ appl.	Selection	
C2351	XCAN baud rate	0		Baud rate XCAN ● Modifications are only valid after reset node!
			0 500 kbit/s	
			1 250 kbit/sec	
			2 125 kbit/s	
			3 50 kbit/s	
			4 1000 kbit/s	

8.2 CAN boot up (AIF)

If the system bus initialisation and the related state change from *Pre-Operational* to *Operational*is not executed by a higher-level master system, a controller can be intended for a ”quasi” master to execute this task.

► The configuration is done via code C2352:

Code		Possible settings			IMPORTANT
No.	Name	Lenze/ appl.	Selection		
C2352	XCAN mst	0			Establish XCAN master operation.
			0	Slave	
			1	Master	

Delay time for system bus initialisation (boot up)

Some nodes (e.g. HMIs) need a certain starting time after mains power-up until they can be put into the *Operational* state by the master via NMT commands.

In order to ensure that the node with the largest starting time is ready to receive NMT commands, you can set a delay time. After this time has expired, the NMT commands can only be sent after mains power-up.

► This delay time is configured via code C2356/1:

Code		Possible settings				IMPORTANT
No.	Name	Lenze/ appl.	Selection			
C2356						Time settings for XCAN
1	XCAN times	0	0	{1 ms}	65000	XCAN boot-up time: Delay time after mains connection for initialisation through the master.
2	XCAN times	0				XCAN1...3_OUT cycle times: Factor to task time for process data object transmission. 0 = event-controlled transmission
3	XCAN times	0				
4	XCAN times	0				
5	XCAN times	0				XCAN delay time: When the Operational NMT status is reached (after Pre-operational), the ”CANdelay” delay time is started. After the delay time, the PDOs XCAN2_OUT and XCAN3_OUT are sent for the first time.

8.3 Node address (Node ID)

Assign each node within the system bus network to a node address – also called *node ID* – for a clear identification in the range 1 to 63.

► A node address may not be assigned more than once within a network.

► The node address for the AIF interface X1 of the ECSxA axis module is configured via code C2350:

Code		Possible settings			IMPORTANT
No.	Name	Lenze/ appl.	Selection		
C2350	XCAN address	1			XCAN node address **XCAN = system bus (CAN) at AIF**
			1	{1} 63	

Assignment of the node address for the data exchange between Lenze devices

If Lenze devices are assigned with node addresses in a complete ascending order, the identifiers of the event-controlled data objects (XCAN2_IO/XCAN3_IO) are factory-set so that the devices are able to communicate with each other:

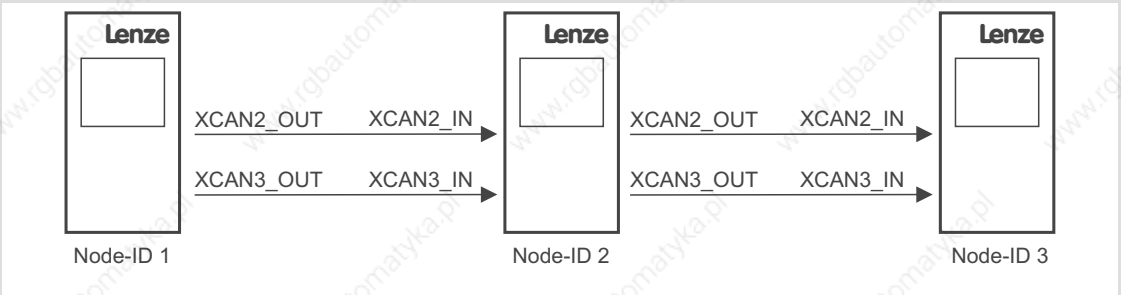

Fig. 8-1 Data exchange between Lenze devices

8.4 Identifiers of the process data objects

The identifiers for the process data objects XCAN1_IO ... XCAN3_IO consist of the basic identifiers and the node address set in C2350:

Identifier = basic identifier + node address

Object		Basic identifier	
		dec	hex
PDO1 (Process data channel 1)	XCAN1_IO (cyclic process data)		
	XCAN1_IN	512	200
	XCAN1_OUT	384	180
PDO2 (Process data channel 2)	XCAN2_IO (event/time-controlled process data)		
	XCAN2_IN	640	280
	XCAN2_OUT	641	281
PDO3 (Process data channel 3)	XCAN3_IO (event/time-controlled process data)		
	XCAN3_IN	768	300
	XCAN3_OUT	769	301

8.4.1 Individual identifier assignment

In case of larger system bus networks with many nodes it may be sensible to set individual identifiers for the process data objects XCAN1_IO ... XCAN3_IO via C2353/C2354 which are independent of the node address set in C2350:

1. Set C2353/x to ”1”.
   – (x = Subcode of the corresponding process data object):

Code		Possible settings			IMPORTANT
No.	Name	Lenze/ appl.	Selection		
C2353					Source for system bus node addresses of XCAN_IN/XCAN_OUT
1	XCAN addr sel	0		CAN node address (C2350)	XCAN1_IN/XCAN1_OUT address
2	XCAN addr sel	0		CAN node address (C2350)	XCAN2_IN/XCAN2_OUT address
3	XCAN addr sel	0		CAN node address (C2350)	XCAN3_IN/XCAN3_OUT address
			0	C2350 (auto)	Automatically determined by C2350
			1	C2354 (man.)	Determined by C2354

2. Set in C2354/x the value which results in the desired identifier when added to ”384”.
   – (x = Subcode of the corresponding process data object):

Code		Possible settings				IMPORTANT
No.	Name	Lenze/ appl.	Selection			
C2354						XCAN: altern. node addresses for XCAN_IN/XCAN_OUT
1	XCAN addr.	129	1	{1}	512	XCAN1_IN address 2
2	XCAN addr.	1				XCAN1_OUT address 2
3	XCAN addr.	257				XCAN2_IN address 2
4	XCAN addr.	258				XCAN2_OUT address 2
5	XCAN addr.	385				XCAN3_IN address 2
6	XCAN addr.	386				XCAN3_OUT address 2

► Ensure that the identifier of the telegram to be sent must correspond to the identifier of the process data object to be addressed.

► In case the addresses are assigned individually, the identifier for the process data objects is made up as follows:

Identifier = 384 + value of C0354/x

► Thus, identifiers can be assigned for the process data objects within the range 385 ... 896.

8.4.2 Display of the identifier set

The identifier which is set for the process data objects can be displayed via C2355.

► C2355 is a display code. Settings via C2355 are not possible.

Code		Possible settings				IMPORTANT
No.	Name	Lenze/ appl.	Selection			
C2355						Identifier for XCAN_IN/XCAN_OUT Read only
1	XCAN Id		1	{1}	2047	Identifier XCAN1_IN
2	XCAN Id					Identifier XCAN1_OUT
3	XCAN Id					Identifier XCAN2_IN
4	XCAN Id					Identifier XCAN2_OUT
5	XCAN Id					Identifier XCAN3_IN
6	XCAN Id					Identifier XCAN3_OUT

8.5 Cycle time (XCAN1_OUT ... XCAN3_OUT)

The transfer of the output data of XCAN1_OUT ... XCAN3_OUT can be event or time-controlled.

► The transmission mode can be configured via code C2356/x:

Code		Possible settings				IMPORTANT
No.	Name	Lenze/ appl.	Selection			
C2356						Time settings for XCAN
1	XCAN times	0	0	{1 ms}	65000	XCAN boot-up time: Delay time after mains connection for initialisation through the master.
2	XCAN times	0				XCAN1...3_OUT cycle times: Factor to task time for process data object transmission. 0 = event-controlled transmission
3	XCAN times	0				
4	XCAN times	0				
5	XCAN times	0				XCAN delay time: When the Operational NMT status is reached (after Pre-operational), the "CANdelay" delay time is started. After the delay time, the PDOs XCAN2_OUT and XCAN3_OUT are sent for the first time.

Event-controlled transmission

C2356/x = 0

► The output data is always transferred when one value in the eight bytes of user data has changed (Lenze default setting).

Time-controlled transmission

C2356/x = 1 ... 65000

► The output data is transferred with the cycle time set in C2356/x (referred to the task cycle time).

Example:

► The CAN object is used in a 10 ms task.

► Factor set via C0356/2 = 5

⇨The CAN object is sent in every fifth task cycle, hence every 50 ms (10 ms x 5).

Code for activating the transmission of event-controlled PDOs

Code		Possible settings			IMPORTANT
No.	Name	Lenze/ appl.	Selection		
C2364		0			Event-controlled PDO transmission
			0	Send PDOs when changing to Operational mode	
			1	Do not send PDOs	

Code for enabling the second parameter channel and the PDO channels

Code		Possible settings			IMPORTANT
No.	Name	Lenze/ appl.	Selection		
C2365					Enabling the second parameter channel and the PDO channels
1		0	0 {1} 3		Enabling the second parameter channel
2		1			Enabling the first parameter channel
3		1			Enabling the second process data channel
4		1			Enabling the third process data channel
			0	Deactivated	
			1	Activated	
			2	Reception activated	
			3	Transmission activated	

8.6 Synchronisation

8.6.1 XCAN sync response

The response to the receipt of a sync telegram can be configured via C2375:

Code		Possible settings			IMPORTANT
No.	Name	Lenze/ appl.	Selection		
C2375					TX mode for XCANx_OUT
1	XCAN Tx mode	0		Response to sync	XCAN1_OUT
2	XCAN Tx mode	0		Response to sync	XCAN2_OUT
3	XCAN Tx mode	0		Response to sync	XCAN3_OUT
			0	Response to sync	
			1	No response to sync	
			2	Event	
			3	Event, cycle C2356 superimposed	

8.6.2 XCAN sync identifier

The transmission or receipt identifiers of the the sync telegram can be configured via C2367/C2368:

Code		Possible settings				IMPORTANT
No.	Name	Lenze/ appl.	Selection			
C2367	Sync Rx Id	128				XCAN receive identifier of the sync telegram
			1	{1}	2047	
C2368	Sync Tx Id	128				XCAN send identifier of the sync telegram
			1	{1}	2047	

8.6.3 XCAN Sync Tx transmission cycle

The cycle time required for transmitting a sync telegram with the identifier set in C2368 can be configured via C2356/5:

Code		Possible settings				IMPORTANT
No.	Name	Lenze/ appl.	Selection			
C2356						Time settings for XCAN
1	XCAN times	0	0	{1 ms}	65000	XCAN boot-up time: Delay time after mains connection for initialisation through the master.
2	XCAN times	0				XCAN1...3_OUT cycle times: Factor to task time for process data object transmission. 0 = event-controlled transmission
3	XCAN times	0				
4	XCAN times	0				
5	XCAN times	0				XCAN delay time: When the Operational NMT status is reached (after Pre-operational), the "CANdelay" delay time is started. After the delay time, the PDOs XCAN2_OUT and XCAN3_OUT are sent for the first time.

8.7 Reset node

Changes of the CAN baud rate, the node addresses and the identifiers are only accepted after a node has been reset.

A reset node can be executed by

- ► New mains connection
- ► Reset-node command via the bus system (by the network management (NMT))

8.8 Monitoring

8.8.1 Time monitoring for XCAN1_IN ... XCAN3_IN

For the inputs of the process data objects XCAN1_IN ... XCAN3_IN a time monitoring can be configured via C2357:

Code		Possible settings				IMPORTANT
No.	Name	Lenze/ appl.	Selection			
C2357						Monitoring time for XCAN process data input objects
1	CE monit time	3000	1	{1 ms}	65000	XCAN1_IN monitoring time
2	CE monit time	3000				XCAN2_IN monitoring time
3	CE monit time	3000				XCAN3_IN monitoring time
4	CE monit time	3000				Bus off
5	CE monit time	3000				AIF monitoring time (can only be set if C2357/6 = 0)
6	CE monit time	0				Sync monitoring time (can only be set if C2357/5 = 0)

The response, if no telegram has been received within the defined monitoring time, can be configured via the code C2382/x:

Code		Possible settings			IMPORTANT
No.	Name	Lenze/ appl.	Selection		
C2382					Configuration of monitoring XCAN (no telegrams received)
1	XCAN Conf. CE	0		Off	XCAN1_IN
2	XCAN Conf. CE	0		Off	XCAN2_IN
3	XCAN Conf. CE	0		Off	XCAN3_IN
4	XCAN Conf. CE	0		Off	Bus off
5	XCAN Conf. CE	0		Off	Life guarding event
6	XCAN Conf. CE	0		Off	Response to sync reception
			0	Off	
			1	Controller inhibit (CINH)	
			2	Quick stop (QSP)	

8.8.2 Bus off

If the ECSxA... axis module has been decoupled from the system bus due to too many faulty received telegrams, the signal "BusOffState" (CE14) is set.

The response to this can be configured via C2382/4

Code		Possible settings			IMPORTANT
No.	Name	Lenze/ appl.	Selection		
C2382					Configuration of monitoring XCAN (no telegrams received)
1	XCAN Conf. CE	0		Off	XCAN1_IN
2	XCAN Conf. CE	0		Off	XCAN2_IN
3	XCAN Conf. CE	0		Off	XCAN3_IN
4	XCAN Conf. CE	0		Off	Bus off
5	XCAN Conf. CE	0		Off	Life guarding event
6	XCAN Conf. CE	0		Off	Response to sync reception
			0	Off	
			1	Controller inhibit (CINH)	
			2	Quick stop (QSP)	

Tip!

Possible causes of faulty received telegrams may be:

- ► Missing bus termination
- ► Insufficient shielding
- ► Potential differences in the grounding of the control electronics
- ► Bus load is too high. See chapter 9.13.3, "Bus load by the ECSxA.. axis module" (📖 180).

Codes for heartbeat

Code		Possible settings				IMPORTANT
No.	Name	Lenze/ appl.	Selection			
C2369		0				Consumer heartbeat COB-ID
			0	{1}	255	
C2370						
1		0	0	{1 ms}	65535	Consumer heartbeat time
2		0	0	{1 ms}	65535	Producer heartbeat time

Codes for emergency

Code		Possible settings				IMPORTANT
No.	Name	Lenze/ appl.	Selection			
C2371		128				Emergency objectCOB-ID
			0	{1}	2047	
C2372		0				Emergency objectCOB-ID
			0	{1}	65535	Inhibit time emergency

Code extension for setting a monitoring response

Code		Possible settings			IMPORTANT
No.	Name	Lenze/ appl.	Selection		
C2382					Configuration of XCAN monitoring (no telegrams received)
5	XCAN Conf. CE	0		Off	Life guarding event
6	XCAN Conf. CE	0		Off	Response to sync reception
			0	Off	
			1	Controller inhibit (CINH)	
			2	Quick stop (QSP)	

8.9 Diagnostics

The following codes can be used for diagnostic purposes:

code	Information displayed	Description
C2121	Operating status of system bus (AIF interface X1)	Chapter 8.9.1 📖 157

► Settings via these codes are not possible.

8.9.1 Operating status of CAN interface

The operating status of the automation interface can be displayed via C2121:

Code		Possible settings			IMPORTANT
No.	Name	Lenze/ appl.	Selection		
C2121	AIF:State				AIF-CAN: Status ● For detailed information: see description of the corresponding fieldbus module. Read only
			1	{1} 255	Binary interpretation reflects bit states
			Bit 0	XCAN1_IN monitoring time	
			Bit1	XCAN2_IN monitoring time	
			Bit2	XCAN3_IN monitoring time	
			Bit3	XCAN bus off	
			Bit4	XCAN operational	
			Bit5	XCAN pre-operational	
			Bit6	XCAN warning	
			Bit 7	Internally assigned	

C2121	Operating state	Description
Bit4 = 1	Operational	The system bus is fully operational. The ECSxA... axis module can transmit and receive parameter and process data.
Bit5 = 1	Pre-operational	The ECSxA... axis module can transmit and receive parameter data. Process data, however, are ignored. The *Pre-Operational* status can be changed to *Operational* status by: ● CAN master ● Reset node – Via C0358 if the ECSxA... axis module has been configured as "quasi master". 📖 167 – via the binary input signal "Reset node" at the SB **CAN_Management** 📖 253 ● the "Pre-operational to Operational" NMT
Bit6 = 1	Warning	The ECSxA... axis module has received faulty telegrams and participates only passively in the system bus, i.e. the axis module no longer transmits any data. Possible causes: ● Missing bus termination ● Insufficient shielding ● Potential differences in the grounding of the control electronics ● Excessive bus load ● The ECSxA... axis module is not connected to the system bus.
Bit3 = 1	Bus off	The ECSxA... axis module has been decoupled from the system bus due to too many faulty telegrams received. ● The response to this status can be configured via C2382/4. 📖 155

9 System bus (CAN / CAN-AUX) configuration

The codes for the system bus (CAN / CAN-AUX) configuration can be found in the GDC parameter menu under **System bus**. They are divided into separate code ranges:

Interface		Code range
X4	System bus (CAN)	C03xx
X14	System bus (CAN-AUX)	C24xx

9.1 Setting the CAN node address and baud rate

System bus (CAN) interface X4

The CAN node address and baud rate for the **system bus (CAN)** can be set via DIP switch (S1) or under C0350/C0351.

- ► If one of the (address) switches 2 ... 7 of the DIP switch is switched on (ON) and the low-voltage supply is connected, the setting of the DIP switch is evaluated and entered into C0350 (CAN node address) and C0351 (baud rate).
- ► If (address) switches 2 ... 7 are switched off (OFF), the switch position is not evaluated. In this case, the CAN node address and the baud rate are taken from C0350 and C0351.

System bus (CAN-AUX) interface X14

The CAN node address and baud rate for the system bus (CAN-AUX) can only be set under C2450/C2451.

If DIP switch 1 is switched on, the setting of DIP switches 2..7 will be evaluated when the low-voltage supply is switched on and entered under C2450 (CAN node address). The switch position for the baud rate is not taken over under CAN-AUX C2451 (CAN baud rate).

9.2 Addressing of parameter and process data objects

The CAN bus system is based on a message-oriented data exchange between a transmitter and many receivers. Thus, all nodes can transmit and receive messages at the same time.

The identifier in the CAN telegram – also called *COB-ID (Communication Object Identifier)* controls which node is to receive a transmitted message. With the exception of the network management (NMT) and the sync telegram (Sync) the identifier contains the node address of the drive besides the basic identifier:

Identifier (COB-ID) = basic identifier + adjustable node address (node ID)

The basic identifier is preset with the following values:

Object			Direction		Basic identifier	
			to the ECS module	from the ECS module	dec	hex
NMT					0	0
Sync					128	80
PDO1 (Process data channel 1)	RPDO1	XCAN1_IN CAN1_IN CANaux1_IN	X		512	200
	TPDO1	XCAN1_OUT CAN1_OUT CANaux1_OUT		X	384	180
PDO2 (Process data channel 2)	RPDO2	XCAN2_IN CAN2_IN CANaux2_IN	X		640	280
	TPDO2	XCAN2_OUT CAN2_OUT CANaux2_OUT		X	641	281
PDO3 (Process data channel 3)	RPDO3	XCAN3_IN CAN3_IN CANaux3_IN	X		768	300
	TPDO3	XCAN3_OUT CAN3_OUT CANaux3_OUT		X	769	301
SDO1 (Parameter data channel 1)			X		1536	600
				X	1408	580
SDO2 (Parameter data channel 2)			X		1600	640
				X	1472	5C0
Node guarding			X		1792	700

Assignment of the node address for the data exchange between Lenze devices

If Lenze devices are assigned with node addresses in a complete ascending order, the identifiers of the event-controlled data objects (CAN2_IO/CAN3_IO) are factory-set so that the devices are able to communicate with each other.

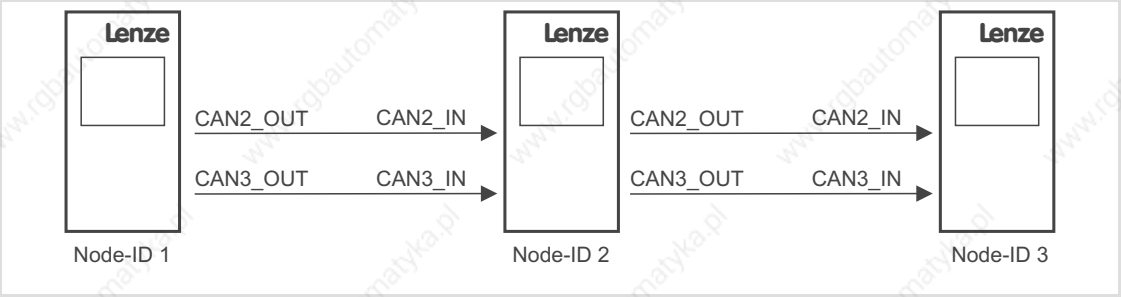

Fig. 9-1 Data exchange between Lenze devices

Assign each node within the system bus network to a node address – also called *node ID* – for a clear identification in the range 1 to 63.

► A node address may not be assigned more than once within a network.

9.2.1 Settings via DIP switch

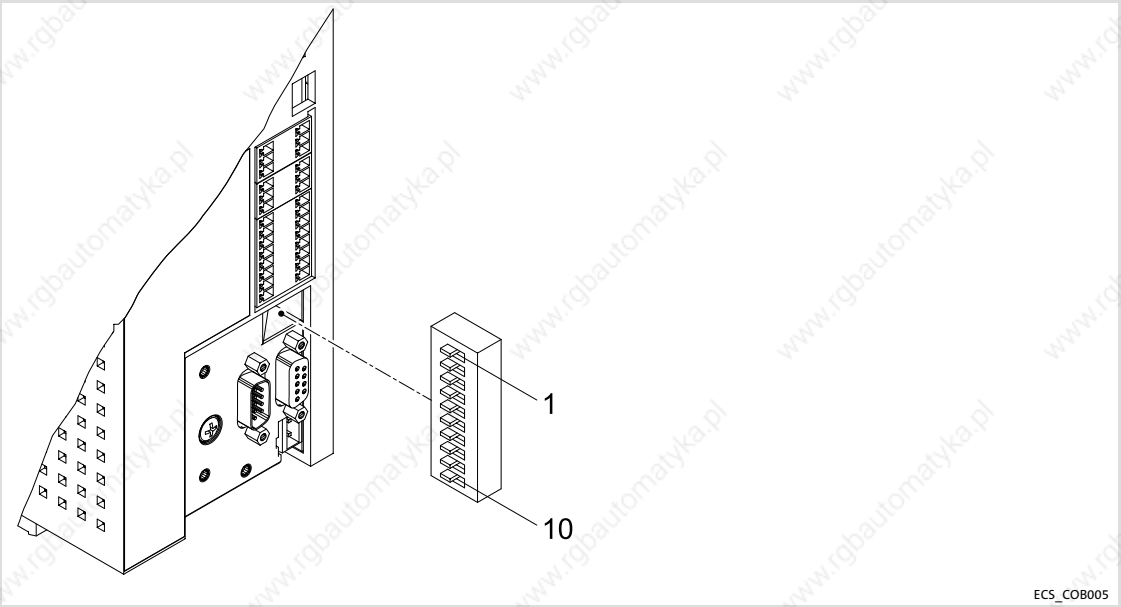

Fig. 9-2 DIP switch for node address and baud rate (all switches: OFF)

Note!

► If all DIP switches for the node address (S2 ... S7) are in ”OFF” position, the settings under code C0350 (node address) and C0351 (baud rate) apply.

► If only one DIP switch for the node address (S2 ... S7) is in ”ON” position, the settings of DIP switches S2 ... S10 apply.

► The baud rate must be set identically for all CAN nodes.

Node address setting

The node address is set with the switches 2 ... 7 of the DIP switch. The switches are assigned to certain valencies. The sum of the valencies make the node address to be set (see example).

Switch		Valency	Example	
			Switching status	Node address
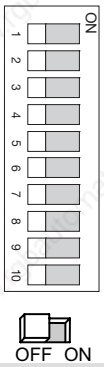	S1	**OFF:** Node address setting is only valid for CAN (C0350 is overwritten if one of switches S2 ... S7 is in ON position) **ON:** Node address setting is valid for CAN and CANaux (C0350 and C2450 are overwritten if one of switches S2 ... S7 is in ON position)		32 + 16 + 8 = 56
	S2	32	**ON**	
	S3	16	**ON**	
	S4	8	**ON**	
	S5	4	OFF	
	S6	2	OFF	
	S7	1	OFF	

Baud rate setting

Note!

The baud rate must be set identically for all CAN nodes.

Switch		Baud rate [kbit/s]				
		1000	500	250	125	50
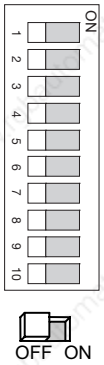	8	**ON**	OFF	OFF	OFF	OFF
	9	OFF	OFF	OFF	**ON**	**ON**
	10	OFF	OFF	**ON**	OFF	**ON**

9.2.2 Settings via codes

Note!

- ► If all DIP switches for the node address (S2 ... S7) are in ”OFF” position, the settings under code C0350 (node address) and C0351 (baud rate) apply.
- ► If only one DIP switch for the node address (S2 ... S7) is in ”ON” position, the settings of DIP switches S2 ... S10 apply.
- ► The baud rate must be set identically for all CAN nodes.

Code		Possible settings		IMPORTANT	
No.	Designation	Lenze/ {Appl.}	Selection		
C0350	CAN address	32		Node address for CAN bus interface X4 ● This code is not active if one of the switches 2 ... 7 of the DIP switch is set to "ON". (📖 161) ● After the setting, a reset node is required.	📖 161 📖 426
			1 {1} 63		
C0351	CAN baud rate	0		Baud rate for CAN bus interface X4 ● The baud rate must be set identically for all CAN nodes. ● This code is not active if one of the switches 2 ... 7 of the DIP switch is set to "ON". ● After the setting, a reset node is required.	📖 161
			0 500 kbit/s		
			1 250 kbit/s		
			2 125 kbit/s		
			3 50 kbit/s		
			4 1000 kbit/s		
C2450	CANa address	1		Node address for CAN bus interface X14 (CAN-AUX)	📖 161 📖 426
			1 {1} 63	This code is inactive if one of DIP switches 2 ... 7 and switch 1 are set to "ON".	
C2451	CANa baud rate	0		Baud rate for CAN bus interface X14 (CAN-AUX)	📖 161
			0 500 kBit/s		
			1 250 kBit/s		
			2 125 kBit/s		
			3 50 kBit/s		
			4 1000 kBit/s		

Save changes with C0003 = 1.

The settings are only accepted after carrying out one of the following actions:

► Switching on the low-voltage supply

► Reset node via the bus system (by the network management (NMT))

► Reset node with C0358/2458 = 1 via the XT keypad (📖 255)

Note!

If reset node is executed via GDC, communication will be interrupted. You therefore have to log in again manually or find the devices connected to the bus once again.

9.3 Individual addressing

Under C0353/C2453 you can determine whether the identifier (COB-ID) is defined with a basic identifier (📖 426) and the node address under C0350/C2453 or individually by means of an ”ID offset”.

The ”ID offset” can be selected under C0354/C2454. For all process data input and output objects, the identifier is calculated as follows:

Identifier (COB-ID) = 384 + ID offset (C0354 or C2454)

Note!
The identifier of the telegram to be sent must correspond to the identifier of the process data input object to be addressed.

Code		Possible settings			IMPORTANT
No.	Designation	Lenze/ {Appl.}	Selection		
C0353					Source for node address of CAN_IN/CAN_OUT (CAN bus interface X4)
1	CAN addr sel	0		CAN node address (C0350)	Address CAN1_IN/OUT
2	CAN addr sel	0		CAN node address (C0350)	Address CAN2_IN/OUT
3	CAN addr sel	0		CAN node address (C0350)	Address CAN3_IN/OUT
			0	C0350 (auto)	Automatically determined by C0350.
			1	C0354 (man.)	Determined by C0354.
C0354					Alternative node addresses for CAN_IN/CAN_OUT (CAN bus interface X4)
1	CAN addr.	129	1	{1} 512	Address 2 CAN1_IN
2	CAN addr.	1			Address 2 CAN1_OUT
3	CAN addr.	257			Address 2 CAN2_IN
4	CAN addr.	258			Address 2 CAN2_OUT
5	CAN addr.	385			Address 2 CAN3_IN
6	CAN addr.	386			Address 2 CAN3_OUT
C2453					Source for system bus node addresses of CANaux_IN/CANaux_OUT (CAN bus interface X14)
1	CANa addr sel	0		CAN node address (C2450)	Address CANaux1_IN/OUT
2	CANa addr sel	0		CAN node address (C2450)	Address CANaux2_IN/OUT
3	CANa addr sel	0		CAN node address (C2450)	Address CANaux3_IN/OUT
			0	C2450 (auto)	Automatically determined by C2450
			1	C2454 (man.)	Determined by C2454

Code		Possible settings				IMPORTANT
No.	Designation	Lenze/ {Appl.}	Selection			
C2454						Alternative node addresses for CANaux_IN/CANaux_OUT (CAN bus interface X14)
1	CANa addr.	129	1	{1}	512	CANaux1_IN address 2
2	CANa addr.	1				CANaux1_OUT address 2
3	CANa addr.	257				CANaux2_IN address 2
4	CANa addr.	258				CANaux2_OUT address 2
5	CANa addr.	385				CANaux3_IN address 2
6	CANa addr.	386				CANaux3_OUT address 2

Save changes with C0003 = 1.

The settings are only accepted after carrying out one of the following actions:

- ► Switching on the low-voltage supply
- ► Reset node via the bus system (by the network management (NMT))
- ► Reset node with C0358/2458 = 1 via the XT keypad (📖 255)

Note!

If reset node is executed via GDC, communication will be interrupted. You therefore have to log in again manually or find the devices connected to the bus once again.

9.4 Display of the resulting identifiers

C0355/C2455 is the display code for the resulting identifiers:

- ► General addressing (📖 426):
  Identifier (COB-ID) = basic identifier + adjustable node address (Node ID)
- ► Individual addressing (📖 164):
  Identifier (COB-ID) = 384 + ID offset (C0354 or C2454)

Code		Possible settings				IMPORTANT	
No.	Designation	Lenze/ {Appl.}	Selection				
C0355						Identifier for CAN_IN/CAN_OUT (CAN bus interface X4) Read only	📖 426
1	CAN Id		1	{1}	2047	Identifier CAN1_IN	
2	CAN Id					Identifier CAN1_OUT	
3	CAN Id					Identifier CAN2_IN	
4	CAN Id					Identifier CAN2_OUT	
5	CAN Id					Identifier CAN3_IN	
6	CAN Id					Identifier CAN3_OUT	
C2455						Identifier for CANaux_IN/CANaux_OUT (CAN bus interface X14) Read only	📖 426
1	CANa Id		1	{1}	2047	Identifier CANaux1_IN	
2	CANa Id					Identifier CANaux1_OUT	
3	CANa Id					Identifier CANaux2_IN	
4	CANa Id					Identifier CANaux2_OUT	
5	CANa Id					Identifier CANaux3_IN	
6	CANa Id					Identifier CANaux3_OUT	

9.5 Determining the boot-up master for the drive system

Unless the bus initialisation and the corresponding status change from ”Pre-operational” to ”Operational” is carried out by a higher-level host system, the controller can be defined as master to carry out this task.

The master functionality is only required for the initialisation phase of the drive system. Under C0356/C2456, you can set a boot-up time for the master for the initialisation phase (📖 168).

The NMT telegram *start_remote_node* (broadcast telegram) serves to set **all** nodes to the ”Operational” NMT status by the master. A data exchange via the process data objects is only possible in this status.

Use C0352/C2452 for configuration.

Code		Possible settings			IMPORTANT	
No.	Designation	Lenze/ {Appl.}	Selection			
C0352	CAN mst	0			Master/slave configuration for CAN bus interface X4	📖 167
			0	Slave	CAN boot-up is not active	
			1	Master	CAN boot up is active	
			2	Master with node guarding		
			3	Slave and heartbeat producer		
			4	Slave with node guarding		
C2452	CANa mst	0			Configuration of master/slave for CAN bus interface X14 (CAN-AUX)	📖 167
			0	Slave		
			1	Master		

Save changes with C0003 = 1.

The settings are only accepted after carrying out one of the following actions:

- ► Switching on the low-voltage supply
- ► Reset node via the bus system (by the network management (NMT))
- ► Reset node with C0358/2458 = 1 via the XT keypad (📖 255)

Note!

If reset node is executed via GDC, communication will be interrupted. You therefore have to log in again manually or find the devices connected to the bus once again.

9.6 Setting the boot-up time/cycle time

Boot-up time

Code	Meaning
C0356/1 C2456/1	● Delay time (in ms) after mains connection for the initialisation by the master. – Only valid if C0352/C2452 = 1 (master). – Normally the Lenze setting (3000 ms) is sufficient. ● In a CAN network without a higher-level host, one node (master) must initialise the CAN network. The master activates the entire network once at a specific instant and thus starts the process data transfer. – Status changes from ”pre-operational” to operational”.

Cycle time for process output data

Code	Meaning
C0356/2 C2456/2	Cycle time (in ms) for CAN2_OUT/CANaux2_OUT in cyclic operation (without sync) ● Setting ”0” = event-controlled data transmission (The output data will only be sent if a value changes in the output object.
C0356/3 C2456/3	Cycle time (in ms) for CAN3_OUT/CANaux3_OUT in cyclic operation (without sync) ● Setting ”0” = event-controlled data transmission (The output data will only be sent if a value changes in the output object.

Activation delay for process output data

Code	Meaning
C0356/4 C2456/4	Delay time (in ms) for process data transmission via CAN2_OUT/CANaux2_OUT or CAN3_OUT/CANaux3_OUT ● When the ”Operational” NMT status is reached (after ”Pre-operational”), the delay time is started. After the delay time, the PDOs CAN2_OUT/CANaux2_OUT and CAN3_OUT/CANaux3_OUT are sent for the first time.

9.7 Node guarding

With cyclic node monitoring (Node Guarding), the CAN master regularly queries the states of the slaves being monitored.

- ► The master starts the node guarding by sending the node guarding telegram.
- ► If the slave does not receive a node guarding telegram within the monitoring time (Node Life Time), the ”Life Guarding Event” is activated (fault message ”Err NodeGuard”).

Settings

In order that the power supply module takes over the function of the ”Node Guarding Slave”, make the following settings:

1. Set C0352 = 2.
   (The power supply module is configured as ”Node Guarding Slave”.)
2. Set the time interval of the status enquiry by the master (Node Guard Time) via C0382.
3. Set the factor for the monitoring time (Node Life Time Factor) via C0383.

$$\text{Node Life Time} = \text{Node Guard Time (C0382)} \cdot \text{Node Life Time Factor (C0383)}$$

4. Set the response to a ”Life Guarding Event” via C0384.

Code		Possible settings			IMPORTANT	
No.	Designation	Lenze/ {Appl.}	Selection			
C0352	CAN mst	0			Master/slave configuration for CAN bus interface X4	📖 167
			0	Slave	CAN boot-up is not active	
			1	Master	CAN boot up is active	
			2	Master with node guarding		
			3	Slave and heartbeat producer		
			4	Slave with node guarding		
C0382	GuardTime	0			Node Guarding (slave): NodeGuardTime ● Time interval of the status inquiry of the master. ● Only relevant if C0352 = 4.	
			0	{1 ms} 65535		
C0383	LifeTimeFact	0			Node Guarding (slave): NodeLifeTime factor ● Factor for the monitoring time of NodeLifeTime ● NodeLifeTime = C0383 x C0382 (NodeGuardTime) ● Only relevant if C0352 = 4.	
			0	{1} 255		

Code		Possible settings		IMPORTANT
No.	Designation	Lenze/ {Appl.}	Selection	
C0384	Err NodeGuard	3		Node Guarding (slave) ● Response for the occurrence of a NodeGuard-Event ● Only relevant for setting C0352 = 4.
			0 TRIP	
			1 Message	
			2 Warning	
			3 Off	
			4 FAIL-QSP	

9.8 CANSync (CAN bus synchronisation)

Tip!

The SB **CAN_Synchronization** is used to synchronise the internal time base of the ECS axis module with the arrival of the sync telegram.

In this way, the internal computing processes (e.g. control processes) of the ECS axis module can be synchronised with the computing processes of other bus nodes which can also process the sync telegram.

For detailed information about the SB **CAN_Synchronization**, please see page (📖 257) in this documentation.

9.8.1 CAN sync response

The response to the reception of a sync telegram can be configured under C0366/C02466:

Code		Possible settings			IMPORTANT	
No.	Designation	Lenze/ {Appl.}	Selection			
C0366	Sync Response	1			CAN sync response for CAN bus interface X4	📖 260
			0	No response		
			1	Response		
C2466	Sync Response	1			CAN-AUX sync response for CAN bus interface X14	
			0	No response		
			1	Response		

9.8.2 CAN sync identifiers

The transmit and receive identifiers of the sync telegram can be configured under C0367/C2467 and C0368/C2468:

Code		Possible settings				IMPORTANT	
No.	Designation	Lenze/ {Appl.}	Selection				
C0367	Sync Rx ID	128				CAN sync receipt ID for CAN bus interface X4	📖 259
			1	{1}	256		
C0368	Sync Tx ID	128				Sync transmission ID for CAN bus interface X4	📖 412 📖 171
			1	{1}	256		
C2467	Sync Rx ID	128				CAN-AUX sync receipt ID for CAN bus interface X14	📖 259
			1	{1}	256		
C2468	Sync Tx ID	128				CAN-AUX Sync-transmission ID for CAN bus interface X14	📖 412 📖 260
			1	{1}	256		

9.8.3 CAN sync Tx transmission cycle

The cycle time for sending a sync telegram with the identifier set under C0368/C2468 can be configured under C0369/C2469:

Code		Possible settings				IMPORTANT	
No.	Designation	Lenze/ {Appl.}	Selection				
C0369	SyNc Tx time	0				CAN sync transmission cycle for CAN bus interface X4 A sync telegram with the identifier of C0368 is sent with the cycle time set. **ECSxP:** The setting is effected automatically depending on C4062!	📖 258
			0	{1 ms}	65000	0 = switched off	
C2469	Sync Tx time	0				CAN-AUX sync transmission cycle for CAN bus interface X14 A sync telegram with the identifier of C2468 is sent with the set cycle time.	📖 257
			0	{1 ms}	65000	0 = switched off	

9.9 Reset node

The following changes will only be valid after a reset node:

- Changes of the CAN node addresses and baud rates (📖 161)
- Changes of the addresses of process data objects (COB-IDs)
  – General addressing (📖 426)
  – Individual addressing (📖 164)
- Change of the master/slave boot up configuration (📖 167)

Reset node can be activated by:

- switching on the low-voltage supply
- the bus system (via the network management (NMT))
- C0358/C2458 = 1 using the XTkeypad
- *CAN_bResetNode_b* or *CANaux_bResetNode_b* = TRUE

Note!
If reset node is executed via GDC, communication will be interrupted. You therefore have to log in again manually or find the devices connected to the bus once again.

Code		Possible settings			IMPORTANT	
No.	Designation	Lenze/ {Appl.}	Selection			
C0358	Reset node	0			Execute reset node (CAN bus interface X4)	📖 255
			0	No function		
			1	CAN reset		
C2458	Reset node	0			Resetting a node (CAN bus interface X14)	📖 255
			0	No function		
			1	CAN-AUX reset		

9.10 System bus management

The SB **CAN_Management/CANaux_Managementis used to**

- activate a node reset.
- process ”Communication Error” and ”Bus Off State” in the PLC program.
- influence the transmission time of CAN2_OUT/CANaux2_OUT and CAN3_OUT/CANaux3_OUT.

Tip!

Detailed information on the SB **CAN_Management** can be found in chapter 13.6 (📖 253).

Detailed information on the SB **CANaux_Management** can be found in chapter 13.11 (📖 279).

9.11 Mapping of indices to codes

The operating system from V6.0 of the ECSxA axis module contains a special CanDSx driver which can be activated by means of the functions of the function library **LenzeCanDSxDrv.lib**.

By means of this driver, indices of the ECSxA... axis modules and other Lenze PLCs can be assigned to another code than the one that is assigned automatically.

Note!

- Each Lenze code is firmly assigned to an index via the following formula:
  – Index = $5FFF_{hex}$ - code
  – Index = 24575_{dec} - code
- The function of the CanDSx driver is restricted to the system bus (CAN).

Functional principle using the following example

Problem

Users have equipped the ECSxA... axis module with a function which can be parameterised via the user code C3200/5. The code C3200 is automatically assigned to the index 21375_{dec}.

$$Index = 24575_{dec} - code = 24575_{dec} - 3200 = 21375_{dec}$$

Due to the communication profile used, however, this function should be parameterised via the index 4101_{dec}/subindex 2.

Solution

By means of the functions of the function library **LenzeCanDSxDrv.lib** the index 4101_{dec}/subindex 2 in the ECSxA... axis module is simply redirected to code C3200/5 so that the communication profile can be used as usual.

Functional principle

The operating system (from V6.0) of the ECSxA... axis module contains a ”mapping table”. According to this table up to 256 indices within the ECSxA... can be ”mapped” to other codes than the ones that are automatically assigned.

If a CAN telegram arrives and the index is within the valid range, it is checked if this index is listed in the mapping table.

- ► If the index is listed in the mapping table, the codes which are reassigned to this index in the mapping table are accessed. ①
- ► If the index is **not** listed in the mapping table, the automatically assigned code which results from the formula mentioned above is accessed. ②

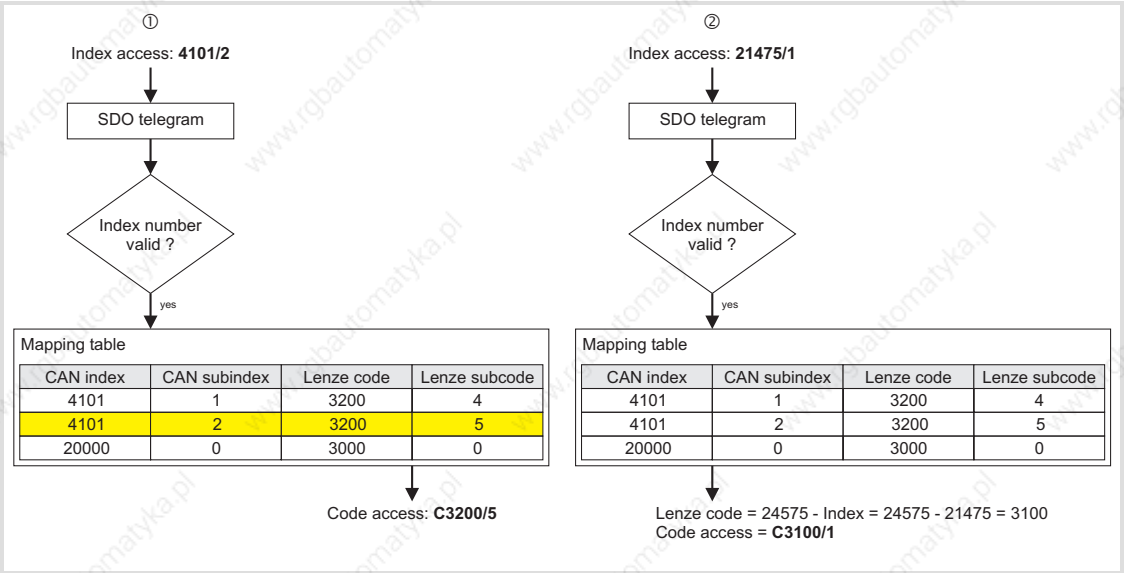

Fig. 9-3 Redirection process of indices to codes

9.12 Remote parameterisation (gateway function)

From operating system V6.x the ECSxA axis module supports the remote parameterisation of other system bus nodes. All write/read accesses to parameters will not be listed in the ECSxA... axis module anymore but redirected to the node selected for remote maintenance.

- ► The redirection takes place via the parameter data channel SDO1 of the selected node.
- ► The node to which the write/read accesses are to be redirected, is determined via C0370 by setting here the node address of the corresponding node.
- ► A time-out during remote parameterisation activates the system error message ”CE5”. The corresponding response can be configured under C0603 (📖 192).

Code		Possible settings			IMPORTANT
No.	Designation	Lenze/ {Appl.}	Selection		
[C0370]	SDO Gateway	0			Gateway address Activating remote parameter setting ● When selecting a setting ≠0, all code read/write accesses will be redirected to the system bus device with the corresponding CAN node address. ● The respective code is accessed via parameter data channel 1 of the target device.
			0	{1} 63	0 = remote parameterisation deactivated

9.13 Diagnostics codes

By means of the following diagnostic codes you can trace the process via the MotionBus (CAN) and the system bus (CAN):

- ► C0359/C2459: Bus state
- ► C0360/C2460: Telegram counter
- ► C0361/C2461: Bus load

9.13.1 Bus status (C0359/C2459)

C0359/C2459 indicates the current operating status of the MotionBus/system bus (CAN).

Value of C0359/C2459	Operating status	Description
0	Operational	The bus system is fully operative.
1	Pre-operational	Only parameters (codes) can be transferred via the bus system. Data exchange from controller to controller is not possible. A status change to ”Operational” is possible via a special signal on the MotionBus/system bus (CAN). A status change from ”Pre-operational” to ”Operational” is possible through: ● The master functionality of a higher-level host ● If a master has been selected under C0352/C2452, the operating status will be changed automatically for the entire drive system after the set boot-up time (C0356/C2456) when power is switched on. ● Reset node via C0358/C2458 (📖 255) ● The binary input signal ”Reset node”, which can be set accordingly. ● Reset node via the connected host
2	Warning	Faulty telegrams have been received. The controller is passive (does not send any data). Possible causes: ● Missing bus termination ● Insufficient shielding ● Potential differences in the grounding of the control electronics ● Bus load is too high ● Controller is not connected to the MotionBus/system bus (CAN)
3	Bus off	Too many faulty telegrams: Controller has disconnected from the MotionBus/system bus (CAN). Reconnection is possible through: ● TRIP reset ● Reset node (📖 255) ● Mains connection

9.13.2 Telegram counter (C0360/2460)

C0360/2460 counts for all parameter data channel the telegrams which are valid for the controller. The counters have a width of 16 bits. If the value ”65535” is exceeded, counting restarts with ”0”.

Counted messages:

C0360/C2460	Meaning
Subcode 1	All sent telegrams
Subcode 2	All received telegrams
Subcode 3	Telegrams sent of CAN1_OUT/CANaux1_OUT
Subcode 4	Telegrams sent of CAN2_OUT/CANaux2_OUT ● Always ”0”; channel is not used!
Subcode 5	Telegrams sent of CAN3_OUT/CANaux3_OUT ● Always ”0”; channel is not used!
Subcode 6	Telegrams sent of parameter data channel 1
Subcode 7	Telegrams sent of parameter data channel 2
Subcode 8	Telegrams received of CAN1_IN/CANaux1_IN
Subcode 9	Telegrams received of CAN2_IN/CANaux2_IN ● Always ”0”; channel is not used!
Subcode 10	Telegrams received of CAN3_IN/CANaux3_IN ● Always ”0”; channel is not used!
Subcode 11	Telegrams received of parameter data channel 1
Subcode 12	Telegrams received of parameter data channel 2

9.13.3 Bus load (C0361/2461)

Use C0361/C2461 to determine the bus load through the controller and the individual data channels in percent. Faulty telegrams are not considered.

Bus load of the individual subcodes:

C0361/C2461	Meaning
Subcode 1	All sent telegrams
Subcode 2	All received telegrams
Subcode 3	Telegrams sent of CAN1_OUT/CANaux1_OUT
Subcode 4	Telegrams sent of CAN2_OUT/CANaux2_OUT ● Always ”0”; channel is not used!
Subcode 5	Telegrams sent of CAN3_OUT/CANaux3_OUT ● Always ”0”; channel is not used!
Subcode 6	Telegrams sent of parameter data channel 1
Subcode 7	Telegrams sent of parameter data channel 2
Subcode 8	Telegrams received of CAN1_IN/CANaux1_OUT
Subcode 9	Telegrams received of CAN2_IN/CANaux2_OUT ● Always ”0”; channel is not used!
Subcode 10	Telegrams received of CAN3_IN/CANaux3_OUT ● Always ”0”; channel is not used!
Subcode 11	Telegrams received from parameter data channel 1
Subcode 12	Telegrams received from parameter data channel 2

The data transfer is limited. The limits are determined by the number of telegrams transmitted per time unit and the baud rate.

The limits can be determined during data exchange in a drive network by adding all drives involved under C0361/1 and C2461/1.

Example:

Drive/host	Bus load
C0361/1 - controller 1	23.5 %
C0361/1 - controller 2	12.6 %
Host	16.0 %
	52.1 % (total)

Two drives and the host are interconnected via the MotionBus (CAN).

Note!

► Max. bus load of all devices involved: 80 %

► If other devices are connected, as for instance decentralised inputs and outputs, their telegrams must be taken into consideration.

► If the time between the individual sync telegrams is too short the bus can be overloaded.

– **Remedy:** Change the synchronisation cycle of the higher-level control system and the controller (C1121).

10 Diagnostics

10.1 Diagnostics with Global Drive Control (GDC)

In GDC, the codes for drive system diagnostics can be found in the parameter menu under **Diagnostics** and the corresponding submenus. Fault history values can be found in the **Faults** menu.

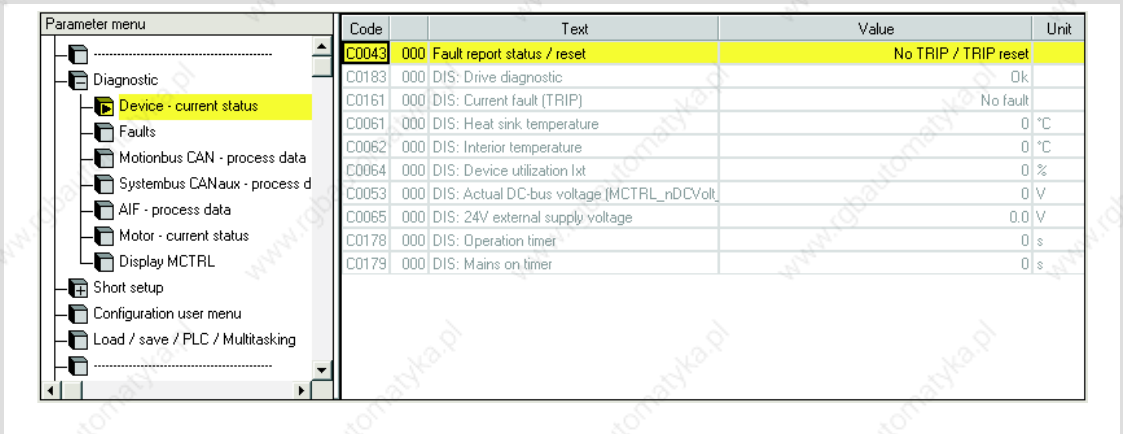

Fig. 10-1 GDC view: Diagnostics - Device - current status

10.2 Diagnostics with Global Drive Oscilloscope (GDO)

The ”Global Drive Oscilloscope” (GDO) is included in the scope of supply of the Lenze parameter setting and operating program ”Global Drive Control” (GDC) and the ”Drive PLC Developer Studio” (DDS) and can be used as an additional diagnostic program.

The GDO serves to record e.g. input and output data and device-internal states during controller operation.

Note!

Detailed information about the functionality and handling of GDO can be found in the Manual ”Global Drive Oscilloscope (GDO), Getting started”.

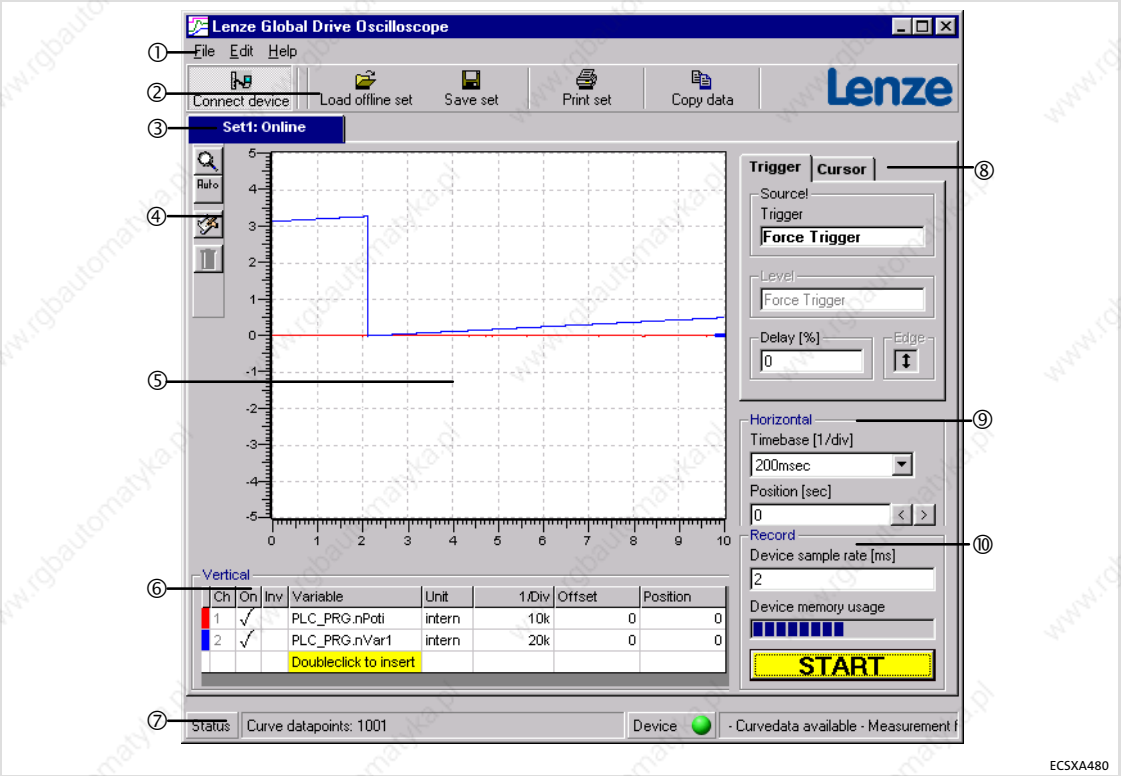

Fig. 10-2 Global Drive Oscilloscope (GDO)

① Menu bar
② Symbol bar at the top
③ Data sets
④ Symbol bar on the left
⑤ Graph display field
⑥ Vertical operating elements
⑦ Status display
⑧ Trigger/cursor operating elements
⑨ Horizontal operating elements
⑩ Operating elements for recording

10.3 Diagnostics with the XT EMZ9371BC keypad

In the ”Diagnostic” menu the two submenus ”Actual info” and ”History” contain all codes for

- ► monitoring the drive
- ► fault/error diagnosis

In the operating level, more status messages are displayed. If several status messages are active, the message with the highest priority is displayed.

Priority	Display	Meaning	
1	GLOBAL DRIVE INIT	Initialisation or communication error between keypad and controller	
2	XXX - TRIP	Active TRIP (contents of C0168/1)	
3	XXX - MESSAGE	Active message (contents of C0168/1)	
4	Special device states:		
		Switch-on inhibit	
5	Source for controller inhibit (the value of C0004 is displayed simultaneously):		
	STP1	9300 servo:	Terminal X5/28
		ECSxS/P/M/A:	Terminal X6/SI1
	STP3	Operating module or LECOM A/B/LI	
	STP4	INTERBUS or PROFIBUS-DP	
	STP5	9300 servo, ECSxA/E:	System bus (CAN)
		ECSxS/P/M:	MotionBus (CAN)
	STP6	C0040	
6	Source for quick stop (QSP):		
	QSP-term-Ext	The MCTRL-QSP input of the MCTRL function block is on HIGH signal.	
	QSP-C0135	Operating module or LECOM A/B/LI	
	QSP-AIF	INTERBUS or PROFIBUS-DP	
	QSP-CAN	9300 servo, ECSxA:	System bus (CAN)
		ECSxS/P/M:	MotionBus (CAN)
7	XXX - WARNING	Active warning (contents of C0168/1)	
8	xxxx	Value below C0004	

11 Monitoring functions

11.1 Overview of monitoring functions

Responses (📖 189) of monitoring functions can be parameterised partly via codes – in the GDC parameter menu) under **Monitoring**.

Monitoring				Possible reactions ● Lenze setting ✓ Can be set					
Fault message		**Description**	**Source**	Code	TRIP	Message	Warning	Fail-QSP	Off
x071	CCR	System fault	Internal		●				
x091	EEr	External monitoring (activated via DCTRL)	FWM	C0581	●	✓	✓	✓	✓
x191	HSF	Internal error	Internal		●				
Voltage supply									
1020	OU	Overvoltage in the DC bus (C0173)	MCTRL			●			
1030	LU	Undervoltage in the DC bus(C0174)	MCTRL			●			
0070	U15	Undervoltage of internal 15 V voltage supply	Internal		●				
0107	H07	Internal fault (power section)	Internal		●				
Communication									
x041	AP1	Internal fault (signal processor)	Internal		●				
x061	CE0	Communication error on the automation interface (AIF)	AIF	C0126	✓		✓		●
x062	CE1	Communication error on the CAN1_IN process data input object (monitoring time adjustable via C0357/1)	CAN1_IN	C0591	✓		✓		●
x063	CE2	Communication error on the CAN2_IN process data input object (monitoring time adjustable via C0357/2)	CAN2_IN	C0592	✓		✓		●
x064	CE3	Communication error on the CAN3_IN process data input object (monitoring time adjustable via C0357/3)	CAN3_IN	C0593	✓		✓		●
x065	CE4	BUS-OFF status of MotionBus (CAN) (too many faulty telegrams)	CAN	C0595	✓		✓		●
x066	CE5	Communication error of the Gateway function (C0370, C0371) via MotionBus (CAN)	CAN	C0603	✓		✓		●
x122	CE11	Communication error on the CANaux1_IN process data input object (time monitoring adjustable via C2457/1)	CANaux1_IN	C2481	✓		✓		●
x123	CE12	Communication error on the CANaux2_IN process data input object (time monitoring adjustable via C2457/2)	CANaux2_IN	C2482	✓		✓		●
x124	CE13	Communication error on the CANaux3_IN process data input object (time monitoring adjustable via C2457/3)	CANaux3_IN	C2483	✓		✓		●
x125	CE14	BUS-OFF status of system bus (CANaux) (too many faulty telegrams)	CANaux	C2484	✓		✓		●
x126	CE15	Communication error of the Gateway function (C0370, C0371) via system bus (CAN)	CANaux	C2485	✓		✓		●
x260	Err Node Guard	”Life Guarding Event”: The controller configured as CAN slave does not receive a ”Node Guarding” telegram with the ”Node Life Time” from the CAN master.	Node Guarding	C0384	●	✓	✓	✓[2]	✓
Temperatures / sensors									

x: 0 = TRIP, 1 = message, 2 = warning, 3 = FAIL-QSP
[1] Adjustable in the DDS under **Project → Exceptional handling**
[2] For ECSxA... only

Monitoring				Possible reactions ● Lenze setting ✓ Can be set					
Fault message		**Description**	**Source**	Code	TRIP	Message	Warning	Fail-QSP	Off
0050	OH	Heatsink temperature > 90° C	MCTRL		●				
0051	OH1	Interior temperature > 90° C	MCTRL		●				
x053	OH3	Motor temperature > 150° C	MCTRL	C0583	●		✓		✓
x054	OH4	Heatsink temperature > C0122	MCTRL	C0582	✓		●		✓
x055	OH5	Interior temperature > C0124	MCTRL	C0605	✓		●		✓
x057	OH7	Motor temperature > C0121	MCTRL	C0584	✓		●		✓
x058	OH8	Motor temperature via inputs T1 and T2 is too high.	MCTRL	C0585	✓		●		✓
x086	Sd6	Thermal sensor error on the motor (X7 or X8)	MCTRL	C0594	✓		✓		●
x095	FAN1	Fan monitoring (only for built-in units)			✓	●			
X110	H10	Thermal sensor error on heatsink	FWM	C0588	●				✓
x111	H11	Thermal sensor error in the interior of the device	FWM	C0588	●				✓
Motor / feedback system									
0011	OC1	Short circuit of motor cable	MCTRL		●				
0012	OC2	Motor cable earth fault	MCTRL		●				
0015	OC5	I x t overload	MCTRL		●				
0016	OC6	I^2 x t overload TRIP (motor, C0120)	MCTRL		●				
x017	OC7	I x t overload warning (axis module, C0123)	MCTRL	C0604	✓		●		✓
x018	OC8	I^2 x t overload warning (motor, C0127)	MCTRL	C0606	✓		●		✓
x032	LP1	Motor phase failure **Note:** Can only be used for asynchronous motors. Activation of the motor phase failure detection minimises the computing time available to the user!	MCTRL	C0597	✓		✓		●
x081	Rel1	Open circuit monitoring of the brake relay output (X25)	FWM	C0602	✓				●
x082	Sd2	Resolver error at X7 **Note:** If monitoring is switched off or in the case of ”Warning”, the machine can reach very high speeds in the case of fault, which may result in the damage of the motor and the machine that is driven!	MCTRL	C0586	●		✓		✓
x085	Sd5	Master current value encoder error on analog input X6/AI+, AI- (C0034 = 1)	MCTRL	C0598	✓		✓		●
x087	Sd7	Absolute value encoder error at X8	MCTRL		●				
x088	Sd8	SinCos encoder error on X8	MCTRL	C0580	✓				●
x089	PL	Error with regard to rotor position adjustment	MCTRL		●				
Speed									
x190	nErr	Speed control error (monitoring window C0576)	MCTRL	C0579	✓	✓	✓	✓	●
x200	Nmax	Maximum speed (C0596) has been exceeded.	MCTRL	C0607	●		✓		✓

x: 0 = TRIP, 1 = message, 2 = warning, 3 = FAIL-QSP
1) Adjustable in the DDS under **Project → Exceptional handling**
2) For ECSxA... only

Monitoring				Possible reactions ● Lenze setting ✓ Can be set					
Fault message		**Description**	**Source**	Code	TRIP	Message	Warning	Fail-QSP	Off
Float error									
0209	float Sys-T	Float error in system task (ID 0)	Internal		●		✓	✓	1)
0210	float Cycl.-T	Float error in cyclic task (PLC_PRG ID 1)	Internal		●		✓	✓	1)
0211 ... 0218	float Task1 ... float Task8	Float error in task 1 (ID 2) ... Float error in task 8 (ID 9)	Internal		●		✓	✓	1)
Time-out / overflow									
0105	H05	Internal fault (memory)	Internal		●				
x108	H08	Extension board not connected properly or not supported by program.	Internal		●				
0201 ... 0208	overrun Task1 ... overrun Task8	Time-out in task 1 (ID 2) ... Time-out in task 8 (ID 9)	Internal		●		✓	✓	1)
0219	overrun Cycl.-T	Time-out in cyclic task (PLC_PRG, ID 1)	Internal		●		✓	✓	
0220	noT-Fkt Credit	Not enough technology units available in the PLC.	Internal		●				
0230	No program	No PLC program loaded in the PLC.	Internal		●				
0231	Unallowed Lib	You have called the library function in the PLC program. This function is not supported.	Internal		●				
x232	NoCamData	Motion profiles (cam data) are not available.	Internal		●				
x240	ovrTrans Queue	Overflow of transmit request memory	Free CAN objects	C0608	●	✓	✓	✓	✓
x241	ovr Receive	Too many receive telegrams	Free CAN objects	C0609	●			✓	
Parameter setting									
0072	PR1	Check sum error in parameter set 1	Internal		●				
0074	PEr	Program error	Internal		●				
0075	PR0	Error in the parameter sets	Internal		●				
0079	PI	Error during parameter initialisation	Internal		●				
0080	PR6	● **For ECSxS/P/M:** Internal fault ● **For ECSxA:** Too many user codes	Internal		●				
Application-specific fault messages									

x: 0 = TRIP, 1 = message, 2 = warning, 3 = FAIL-QSP
1) Adjustable in the DDS under **Project → Exceptional handling**
2) For ECSxA... only

Monitoring				Possible reactions ● Lenze setting ✓ Can be set					
Fault message		**Description**	**Source**	Code	TRIP	Message	Warning	Fail-QSP	Off
0425	InvHoming-Offs	Homing measuring system offset (C3012) is invalid.			●				
2402	PosPosLimit	Positive software limit position (C3040) has been reached.					●		
2403	NegPosLimit	Negative software limit position (C3041) has been reached.					●		
2404	FollowErrWarn	Following error warning limit (C3030) has been reached.					●		
2422	InvProfData	Impermissible positioning profile parameters					●		
2423	OverflIntPos	Position setpoint overflow					●		
2424	SWLimOut-OfRan	Impermissible software limit positions					●		
3400	PosLimitSw	Positive hardware limit switch has been approached.						●	
3401	NegLimitSw	Negative hardware limit switch has been approached.						●	
3402	PosPosLimit	Positive software limit position (C3040) has been reached in positioning profile mode.						●	
3403	NegPosLimit	Negative software limit position (C3041) has been reached in positioning profile mode.						●	
3405	FollowErrFail	Following error limit (C3031) has been reached.						●	
3406	HomePosErr	Home position has not been reached.						●	
3409	MaxVelErr	Max. speed has been reached.						●	
3417	InSftw-Limits	Impermissible setting of the software limit positions						●	
3500	ExtTripSet	External error has been actuated.						●	
3501	InvTpProfNo	Invalid positioning profile number						●	
3503	InvalidFeedb	Impermissible feedback system selection						●	
3504	InvalidOS	Version of operating system is not compatible.						●	

x: 0 = TRIP, 1 = message, 2 = warning, 3 = FAIL-QSP
1) Adjustable in the DDS under **Project → Exceptional handling**
2) For ECSxA... only

11.2 Configuring monitoring functions

11.2.1 Responses

Various monitoring functions (📖 184) protect the drive system against impermissible operating conditions.

If a monitoring function is activated,

- ► the set response is triggered to protect the drive.
- ► the fault message is entered at position 1 in the history buffer (📖 213).

The fault history buffer (C0168/x) saves fault messages with an offset that indicates the type of response.

No. of the fault message	Type of response
0xxx	TRIP
1xxx	Message
2xxx	Warning
3xxx	FAIL-QSP (only for ECSxS/P/M/A axis modules)

Example: C0168/1 = 2061

- ► x061:
  The current fault (subcode 1 of C0168) is a communication error (fault message ”CE0”/no. ”x061”) between the AIF module and the ECS axis module.
- ► 2xxx:
  The response is a warning.

Response	⇨ Consequence	Display Keypad XT		
		RDY	IMP	Fail
TRIP		☐	■	■
TRIP active:	⇨ The power outputs U, V, W are switched to high resistance. ⇨ The drive is coasting (no control).			
TRIP reset:	⇨ The drive decelerates to its setpoint within the set deceleration times.			
Message	**Danger!** The drive restarts automatically if the message is removed.	☐	■	■
Message active:	⇨ The power outputs U, V, W are switched to high resistance.			
≤ 0,5 s	⇨ The drive is coasting (no control).			
> 0,5 s	⇨ The drive is coasting (due to internal controller inhibit). If necessary, restart program.			
Message reset:	⇨ The drive runs to its setpoint with the maximum torque.			
FAIL-QSP	⇨ The drive is decelerated to standstill within the quick stop deceleration time (C0105).	–	–	■
Warning	**STOP!** The drive can be destroyed due to deactivated monitoring functions.	■	☐	■
	⇨ The failure merely is displayed, the drive runs on in a controlled manner.			
Off	**STOP!** The drive can be destroyed due to deactivated monitoring functions.	–	–	–
	⇨ There is no response to the failure.			

☐ = off ■ = on

11.2.2 Monitoring times for process data input objects

Error message		Monitoring function	System variable	Possible response			
				TRIP	Message	Warning	Off
x062	CE1	Communication error at the process data input object CAN1_IN	CAN_bCe1CommErrCanIn1_b	✓		✓	•
x063	CE2	Communication error at the process data input object CAN2_IN	CAN_bCe2CommErrCanIn2_b	✓		✓	•
x064	CE3	Communication error at the process data input object CAN3_IN	CAN_bCe3CommErrCanIn3_b	✓		✓	•
x065	CE4	BUS-OFF status of MotionBus (CAN)	CAN_bCe4BusOffState_b	✓		✓	•
x122	CE11	Communication error at the process data input object CANaux1_IN	CANaux_bCe1CommErrCanIn1_b	✓		✓	•
x123	CE12	Communication error at the process data input object CANaux2_IN	CANaux_bCe2CommErrCanIn2_b	✓		✓	•
x124	CE13	Communication error at the process data input object CANaux3_IN	CANaux_bCe3CommErrCanIn3_b	✓		✓	•
x125	CE14	BUS-OFF status of system bus (CANaux)	CANaux_bCe4BusOffState_b	✓		✓	•

• Default setting
✓ Setting possible

Each process data input object can monitor whether a telegram has been received within a specified time. As soon as a telegram arrives, the corresponding monitoring time (C0357/C02457) is restarted (”retriggerable monoflop” function).

The following assignments are valid:

Code		Possible settings				IMPORTANT	
No.	Designation	Lenze/ {Appl.}	Selection				
C0357						Monitoring time for CAN1...3_IN (CAN bus interface X4)	📖 191
1	CE monit time	3000	1	{1 ms}	65000	CE1 monitoring time	
2	CE monit time	3000				CE2 monitoring time	
3	CE monit time	3000				CE3 monitoring time	
C2457						Monitoring time for CANaux1...3_IN (CAN bus interface X14)	📖 191
1	CE monit time	3000	1	{1 ms}	65000	CE11 monitoring time	
2	CE monit time	3000				CE12 monitoring time	
3	CE monit time	3000				CE13 monitoring time	

The following responses can be set for communication errors:

► 0 = Error (TRIP) - controller sets controller inhibit (CINH)

► 2 = Warning

► 3 = Monitoring is switched off

Codes for setting the response to the monitoring functions:

CAN bus interface	Code	Monitoring
X4 ECSxS/P/M: MotionBus (CAN) ECSxA: System bus (CAN)	C0591	CAN1_IN (”CE1”)
	C0592	CAN2_IN (”CE2”)
	C0593	CAN3_IN (”CE3”)
	C0595	Bus off (”CE4”)
	C0603	Gateway function (”CE5”)
X14 System bus (CAN)	C2481	CANaux1_IN (”CE11”)
	C2482	CANaux2_IN (”CE12”)
	C2483	CANaux3_IN (”CE13”)
	C2484	Bus off (”CE14”)
	C2485	Gateway function (”CE15”)

The input signals (CAN1...3_IN/CANaux1...3_IN) can also be used as binary output signals, e.g. for the assignment of the output terminal.

Bus off

If the controller disconnects from the MotionBus/system bus (CAN) due to faulty telegrams, the ”BusOffState” signal (CE4/CE14) is set.

”BusOffState” can activate an error (TRIP) or warning. The signal can also be switched off. The response is set under C0595/C2484. You can also assign the terminal output for this.

11.2.3 Time-out with activated remote parameterisation

If a time-out occurs during remote parameterisation (gateway function) activated via C0370, the system error message CE5 is output.

The response to this can be configured via C0603:

Code		Possible settings		IMPORTANT	
No.	Designation	Lenze/ {Appl.}	Selection		
C0603	MONIT CE5	3		Configuration of gateway function monitoring (CE5) ”Time-out” when remote parameter setting is activated (C0370)	📖 191
			0 TRIP		
			2 Warning		
			3 Off		

11.2.4 Short circuit monitoring (OC1)

Error message		Monitoring function	System variable	Possible response			
				TRIP	Message	Warning	Off
011	OC1	Short circuit	MCTRL_bShortCircuit_b	•			

• Default setting
✓ Setting possible

The monitoring process is activated if a short circuit occurs in the motor phases. This can also be caused by an interturn fault in the machine.

► Monitoring can also be actuated at mains connection, if an **earth fault** occurs.

► If monitoring is actuated, the drive controller has to be disconnected from the mains, and the short circuit has to be eliminated.

11.2.5 Earth fault monitoring (OC2)

Error message		Monitoring function	System variable	Possible response			
				TRIP	Message	Warning	Off
012	OC2	Earth fault	MCTRL_bEarthFault_b	•			

• Default setting
✓ Setting possible

The ECSxA... axis module is equipped with a standard earth fault detection.

► If monitoring is actuated, the drive controller has to be disconnected from the mains, and the earth fault has to be eliminated.

Possible causes for an earth fault are:

► Short circuit to frame of the machine

► Short circuit of a phase to the shield

► Short circuit of a phase to PE

11.2.6 Motor temperature (OH3, OH7)

The motor temperature is monitored by means of a continuous thermal sensor (KTY).

Error message		Monitoring function	System variable	Possible response			
				TRIP	Message	Warning	Off
053	OH3	Motor temperature (fixed, 150 °C)	MCTRL_bMotorTempGreaterSetValue_b	•		✓	✓
057	OH7	Motor temperature (adjustable, C0121)	MCTRL_bMotorTempGreaterC0121_b	✓		•	✓

• Default setting
✓ Setting possible

Note!

This monitoring only applies to temperature sensors specified by Lenze like the temperature sensors included in the standard servo motors.

With regard to default setting, this monitoring is switched actively and is actuated when no Lenze servo motor is used!

► Adjustable warning threshold (OH7)
– The warning threshold can be set under C0121
– The reaction to exceeding the threshold can be set under C0584

► Fixed warning threshold (OH3)
– Threshold = 150 °C
– The reaction to exceeding the threshold can be set under C0583

The hysteresis is 15 K, i.e. the reset value for the fixed warning threshold is 135 °C.

The connections X7 (📖 86) or X8 (📖 87) are available as inputs for the temperature sensor.

Stop!

The temperature sensor must only be connected to X7 **or** X8; the other input for the temperature sensor must not be assigned!

The monitoring with the adjustable threshold (OH7) is designed as an early warning stage before final disconnection of the controller by means of TRIP (OH3). Therefore, the process can be influenced accordingly, so that the final disconnection of the controller at unfavourable moments is avoided. Furthermore, for instance, additional fans can be activated, generating an unacceptable noise load when switched to continuous operation.

Code		Possible settings				IMPORTANT	
No.	Designation	Lenze/ {Appl.}	Selection				
C0121	OH7 limit	120				Threshold for motor temperature monitoring	📖 193
			45	{1 °C}	150	Motor temperature > C0121 ⇨ fault message OH7 (C0584)	
C0583	MONIT OH3	0				Configuration of motor temperature monitoring via resolver input X7 or encoder input X8	📖 193
			0	TRIP			
			2	Warning			
			3	Off			

Code		Possible settings			IMPORTANT	
No.	Designation	Lenze/ {Appl.}	Selection			
C0584	MONIT OH7	2			Configuration of motor temperature monitoring via resolver input X7 or encoder input X8 Set threshold in C0121	📖 193
			0	TRIP		
			2	Warning		
			3	Off		

11.2.7 Heatsink temperature (OH, OH4)

Error message		Monitoring function	System variable	Possible response			
				TRIP	Message	Warning	Off
050	OH	Heatsink temperature (fixed, 90 °C)	MCTRL_bKuehlGreaterSetValue_b	•			
054	OH4	Heatsink temperature (adjustable, C0122)	MCTRL_bKuehlGreaterC0122_b	✓		•	✓

• Default setting
✓ Setting possible

The heatsink temperature of the controller can be monitored with two temperature thresholds:

► Adjustable temperature threshold (OH4)
– Threshold can be set under C0122
– The reaction to exceeding the threshold can be set under C0582

► Fixed temperature threshold (OH)
– Threshold = 90 °C
– Reaction to exceeding the threshold = TRIP

The hysteresis is 5 K, i.e. the reset value for the fixed threshold is 85 °C.

The monitoring with the adjustable threshold (OH4) is designed as an early warning stage before final disconnection of the controller by means of TRIP (OH). Therefore, the process can be influenced accordingly, so that the final disconnection of the controller at unfavourable moments is avoided. Furthermore, for instance, additional fans can be activated, generating a noise load when switched to continuous operation.

Code		Possible settings				IMPORTANT	
No.	Designation	Lenze/ {Appl.}	Selection				
C0122	OH4 limit	80				Threshold for heatsink temperature monitoring	📖 196
			45	{1 °C}	90	Heatsink temperature > C0122 ⇨ fault message OH4 (C0582)	
C0582	MONIT OH4	2				Configuration of heatsink temperature monitoring Set threshold in C0122	📖 196
			0	TRIP			
			2	Warning			
			3	Off			

The following causes can bring about an actuation of the monitoring process:

Cause	Remedy
The ambient temperature is too high.	Mount a fan in the control cabinet.
The drive controller is overloaded in the arithmetic mean, i. e. overload and recovery phase are above 100%.	• Mount a fan in the control cabinet. • Reduce overload phase. • Use more powerful drive controller.

11.2.8 Temperature inside the controller (OH1, OH5)

The temperature inside the controller can be monitored with two temperature thresholds:

- ► with an adjustable threshold (OH5) via C0124
  - – The warning threshold can be set under C0124
  - – The reaction to exceeding the threshold can be set under C0605
- ► with a fixed threshold (OH1)
  - – Threshold = 90 °C
  - – Reaction to exceeding the threshold = TRIP

The hysteresis is 5 K, i.e. the reset value for the fixed warning threshold is 85 °C.

The monitoring with the adjustable threshold (OH4) is designed as an early warning stage before final disconnection of the controller by means of TRIP (OH). Therefore, the process can be influenced accordingly, so that the final disconnection of the controller at unfavourable moments is avoided. Furthermore, for instance, additional fans can be activated, generating a noise load when switched to continuous operation.

Code		Possible settings				IMPORTANT	
No.	Designation	Lenze/ {Appl.}	Selection				
C0124	OH5 limit	75				Threshold for temperature monitoring inside the device	📖 197
			10	{1 %}	90	C0062 > C0124 ⇨ fault message OH5 (C0605)	
C0605	MONIT OH5	2				Configuration of early warning of temperature inside the device (threshold in C0124)	📖 197
			0	TRIP			
			2	Warning			
			3	Off			

11.2.9 Thermal sensor function monitoring (H10, H11)

The function of the thermal sensors of the heatsink and the interior of the device is monitored. If the thermal sensors report values outside the measuring range, fault H10 (heatsink) or H11 (interior) is reported. The response to these faults can be defined under C0588.

Code		Possible settings		IMPORTANT	
No.	Designation	Lenze/ {Appl.}	Selection		
C0588	MONIT H10/H11	0		Configuration of monitoring Thermal sensors (H10, H11) in the controller "SensFaultTht/SensFaultTid" (FWM H10/H11)	📖 198
			0 TRIP		
			2 Warning		
			3 Off		

11.2.10 Current load of controller (I x t monitoring: OC5, OC7)

Error message		Monitoring function	System variable	Possible response			
				TRIP	Message	Warning	Off
015	OC5	I x t overload	MCTRL_bIxtOverload_b	•			

• Default setting
✓ Setting possible

The I x t monitoring monitors the current load of the axis module. The monitoring is set such that operation

- ► is permanently possible with a device output current = I_r.
- ► is possible for ≤ 30 s with a device output current ≤ 1.5 x I_r.

The overload protection of the axis module can be set with thresholds:

- ► adjustable threshold (OC7) via C0123
- ► fixed threshold (OC5) = 100 %

After an overcurrent phase, you can calculate with a recovery phase of 120 s. For a more precise consideration, see the overcurrent characteristic and the value 3 x $\tau_{axis\ module}$ (📖 199).

The response to exceeding the adjustable threshold can be defined under C0604.

Code		Possible settings		IMPORTANT	
No.	Designation	Lenze/ {Appl.}	Selection		
C0123	OC7 limit	90		Threshold for I x t warning (axis module)	📖 193
			0 {1 %} 100	C0064 > C0123 ⇨ fault message OC7 (C0604)	

Code		Possible settings		IMPORTANT	
No.	Designation	Lenze/ {Appl.}	Selection		
C0604	MONIT OC7	2		Configuration of early warning I x t threshold (C0123)	📖 193
			0 TRIP		
			2 Warning		
			3 Off		

Overcurrent characteristic

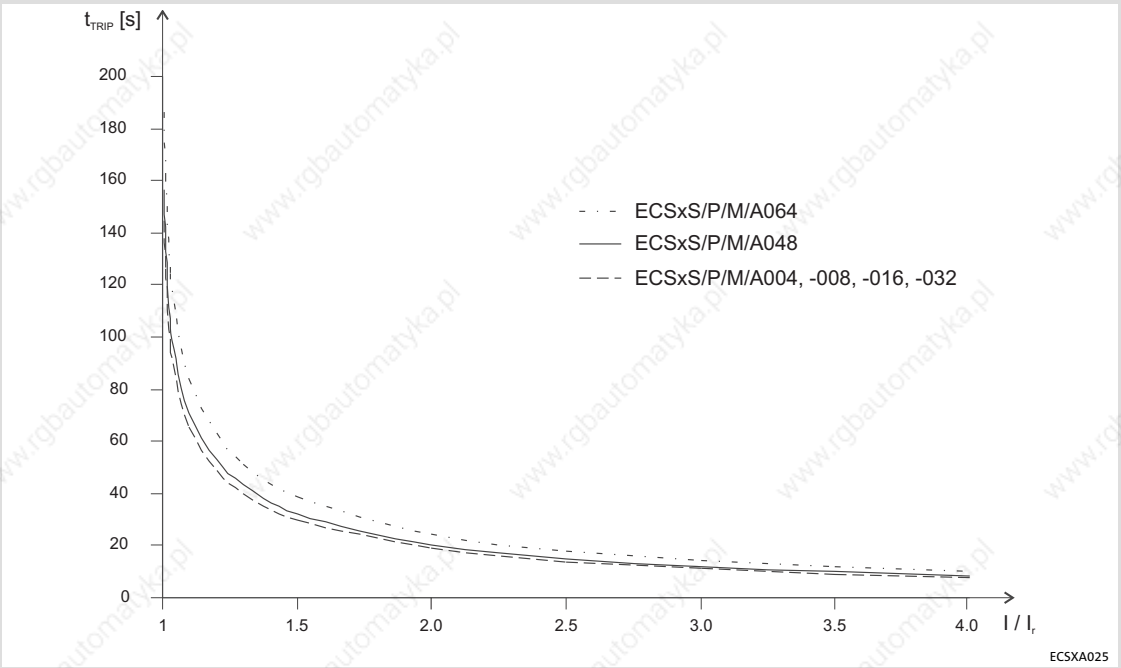

Fig. 11-1 Overcurrent characteristic ECSxA..., see also "Rated data" 📖 34

The overcurrent characteristic shows the maximum time t_{TRIP} till the axis module generates an I x t error. In order to reach this time t_{TRIP} again, the time 3 x $\tau_{axis\ module}$ with the load I/I_r = 0 A must be observed.

Device	$\tau_{axis\ module}$ [s]	Overcurrent characteristic
ECSxA004	54.6	$I \cdot t = \frac{I_{subprofile\_x}}{I_{rated}} - \left(\frac{I_{subprofile\_x}}{I_{rated}} - I \cdot t_{subprofile\_x-1}\right) \cdot e^{-\frac{t_{subprofile\_x}}{\tau_{axis\_module}}}$
ECSxA008	27.3	
ECSxA016	27.3	
ECSxA032	27.3	
ECSxA048	29.5	
ECSxA064	35.1	

Overcurrent diagram for OC5 fault message

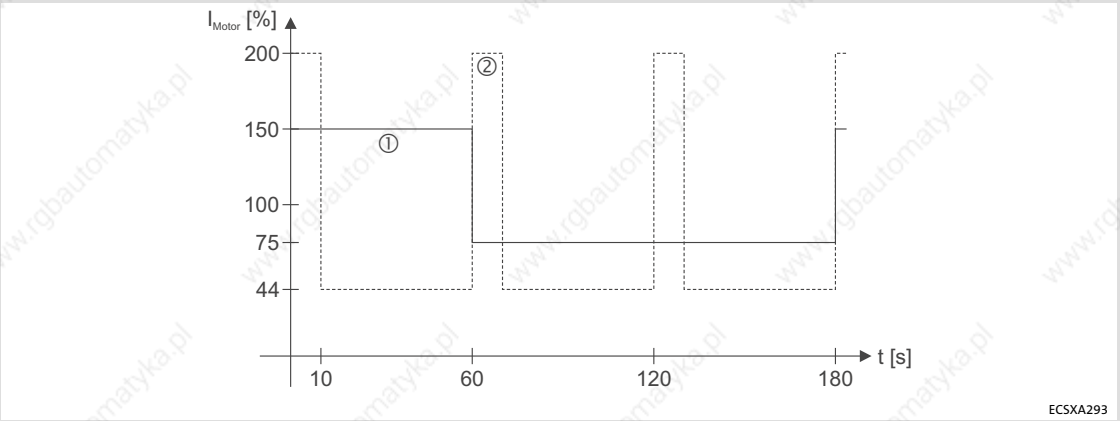

Fig. 11-2 Maximum overcurrent as a function of time

The maximum admissible overcurrent is dependent on the I_{max}limit set in C0022.

① I_{max} limit set in C0022 ≤ 150 % I_r:

► For **180 s**, the arithmetic mean value of the motor current must not exceed **100 %** of the rated device current.

► **Example:** Arithmetic mean for characteristic ①:

$$\frac{60\ \text{s} \cdot 150\ \% + 120\ \text{s} \cdot 75\ \%}{180\ \text{s}} = 100\ \%$$

② I_{max} limit set in C0022 > 150 % I_r:

► For **60 s**, the arithmetic mean value of the motor current must not exceed **70 %** of the rated device current.

► **Example:** Arithmetic mean for characteristic ②:

$$\frac{10\ \text{s} \cdot 200\ \% + 50\ \text{s} \cdot 44\ \%}{60\ \text{s}} = 70\ \%$$

The current device utilisation is displayed in C0064:

Code		Possible settings				IMPORTANT	
No.	Designation	Lenze/ {Appl.}	Selection				
C0064	Utilization					Device utilisation (I x t) over the last 180 s Only display	📖 193
			0	{1 %}	150	• C0064 > 100 % activates OC5-TRIP. • TRIP-RESET only is possible if C0064 < 95 %.	

11.2.11 Current load of motor (I^2 x t monitoring: OC6, OC8)

The I^2 x t load of the motor is continually calculated by the axis module and displayed in C0066. Via C0120 and C0127 you can set two actuation thresholds. If threshold 1 is exceeded, the response (OC8) set in C0606 is activated. If threshold 2 is exceeded, OC6-TRIP is activated.

The I^2 x t monitoring has been designed such that it will be activated after 179 s in the event of a motor current of 1.5 x I_r and a set threshold of 100 % (thermal motor time constant C0128 = 5 min).

Code		Possible settings				IMPORTANT	
No.	Designation	Lenze/ {Appl.}	Selection				
C0120	OC6 limit	105				Threshold for I^2 x t monitoring (motor)	📖 201
			0	{1 %}	120	0 = I^2 x t monitoring is switched off I^2 x t > C0120 ⇨ OC6-TRIP	
C0127	OC8 limit	100				Threshold for I^2 x t warning (motor)	📖 201
			0	{1 %}	120	I^2 x t > C0127 ⇨ fault message OC8 (C0606)	
C0128	Tau motor	5.0				Thermal time constant of the motor	📖 201
			0.5	{0.1 min}	25.0	For calculating the I^2 x t disconnection	
C0606	MONIT OC8	2				Configuration of I^2 x t early warning (threshold in C0120)	📖 201
			0	TRIP			
			2	Warning			
			3	Off			

Calculation of the release time:

$$t = -(C0128) \cdot \ln\left(1 - \frac{y+1}{\left(\frac{I_M}{I_r}\right)^2 \cdot 100}\right)$$

I_M	Current motor current
I_r	Rated motor current
y	C0120 or C0127

The release time for different motor currents and thresholds can be taken from the diagram (C0128 = 5.0 min):

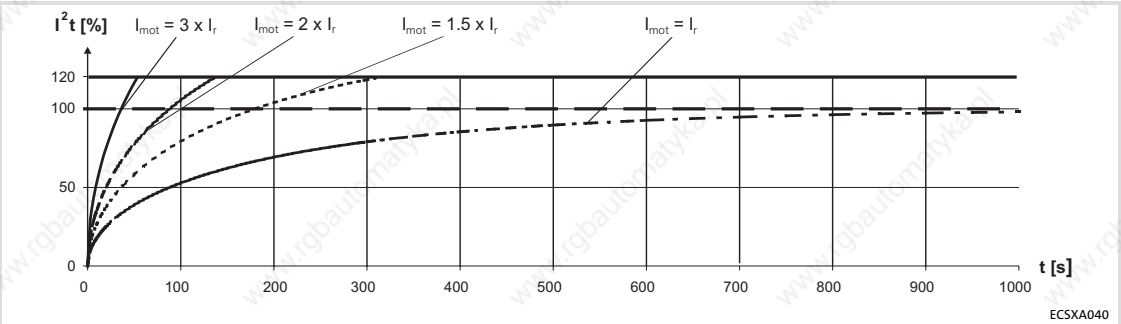

Fig. 11-3 I^2 x t monitoring: Release times with different motor currents

Imot	Motor current
I_r	Rated motor current
I^2t	I^2t load
T	Time

11.2.12 DC-bus voltage (OU, LU)

Error message		Monitoring function	System variable	Possible response			
				TRIP	Message	Warning	Off
020	OU	Overvoltage	MCTRL_bOverVoltage_b		•		
030	LU	Undervoltage	MCTRL_bUnderVoltage_b		•		

• Default setting
✓ Setting possible

This monitoring functions monitor the DC bus and protect the drive controller.

► If the DC-bus voltage at terminals $+U_G$ and $-U_G$ exceeds the upper switch-off threshold set in C0173, an OU message is actuated.

► If the DC-bus voltage at terminals $+U_G$ and $-U_G$ falls below the lower switch-off threshold set in C0174, an LU message is actuated.

The monitoring remains active until the corresponding threshold is fallen below/exceeded again.

Note!
All drive components in DC-bus connections must have the same thresholds!

Switch-off and switch-on thresholds

- The switch-off threshold defines the voltage level of the DC-bus voltage, at which the pulse inhibit is activated.
- The switch-off and switch-on thresholds dependent on C0173 can be gathered from the following table:

Selection	Mains voltage	Brake unit	LU message (Undervoltage)		OU message (Overvoltage)	
C0173	Power supply module [V AC]		Setting [V DC]	Resetting [V DC]	Setting [V DC]	Resetting [V DC]
0	230	yes/no	130	275	400	390
1	400	yes/no	285	430	800	790
2	400 ... 460	yes/no	328	473	800	790
3	480	no	342	487	800	785
4	480	yes	342	487	800	785
10	230	yes/no	C0174	C0174 + 5 V	400	390
11	400 (Lenze setting)	yes/no	C0174	C0174 + 5 V	800	790
12	400 ... 460	yes/no	C0174	C0174 + 5 V	800	790
13	480	no	C0174	C0174 + 5 V	800	785
14	480	yes	C0174	C0174 + 5 V	800	785

Tip!

If undervoltage is existent for more that 3 s, or if mains connection is carried out, an entry into the fault memory is effected.

- This operational mode can occur if the control module is fed via the terminals X6/+24 and X6/GND by means of an external supply and the mains are disconnected.
- If there is no undervoltage anymore (mains are reconnected again), the entry in the fault memory is not continued, but deleted. This case does not describe an error, but a state of the drive controller.

Undervoltages of less than 3 s are interpreted as a fault (e. g. mains fault) and are entered into the fault memory. In this case, the fault memory is updated.

Code		Possible settings			IMPORTANT	
No.	Designation	Lenze/ {Appl.}	Selection			
C0173	UG limit	11			Adaptation of the DC-bus voltage thresholds: ● Check during commissioning and adapt, if necessary. ● All drive components in DC bus connections must have the same thresholds. – LU = Undervoltage threshold – OU = Overvoltage threshold	📖 96
			0	Mains = 230 V ± B	Operation on 230 V mains with or without brake unit LU = 130 V, OU = 400 V	
			1	Mains = 400 V ± B	Operation on 400 V mains with or without brake unit LU = 285 V, OU = 800 V	
			2	Mains = 460 V ± B	Operation on 460 V mains with or without brake unit LU = 328 V, OU = 800 V	
			3	Mains = 480V - B	Operation on 480 V mains without brake unit LU = 342 V, OU = 800 V	
			4	Mains = 480V + B	Operation on 480 V mains with brake unit LU = 342 V, OU = 800 V	
			10	Mains = 230 V ± B	Operation on 230 V mains with or without brake unit LU = C0174, OU = 400 V	
			11	Mains = 400 V ± B	Operation on 400 V mains with or without brake unit LU = C0174, OU = 800 V	
			12	Mains = 460 V ± B	Operation on 460 V mains with or without brake unit LU = C0174, OU = 800 V	
			13	Mains = 480V - B	Operation on 480 V mains without brake unit LU = C0174, OU = 800 V	
			14	Mains = 480V + B	Operation on 480 V mains with brake unit LU = C0174, OU = 800 V	
C0174	UG min	60			Undervoltage threshold of DC bus (LU)	📖 96
			15	{1 V} 342		

11.2.13 Voltage supply of the control electronics (U15)

If the voltage at X6/DI1 or X6/DI3 falls below 17 V, TRIP ”U15” is actuated. The fault can only be reset if U > 19 V.

11.2.14 Motor phases (LP1)

Error message		Monitoring function	System variable	Possible response			
				TRIP	Message	Warning	Off
032	LP1	Motor phase failure	MCTRL_bMotorphaseFail_b	✓		✓	•

• Default setting
✓ Setting possible

This monitoring function checks whether a motor phase has failed.

Note!

► This monitoring function can only be used for asynchronous motors.
► When this monitoring function is activated, the calculating time which is available for the user, is reduced.

► The response is set via C0597.
► The monitoring limit is set via C0599.

Error acknowledgement

1. Check motor cables.
2. Execute TRIP-RESET.

Code		Possible settings			IMPORTANT	
No.	Designation	Lenze/ {Appl.}	Selection			
C0597	MONIT LP1	3			Configuration of motor phase monitoring (LP1) **When this monitoring function is activated, the calculating time which is provided to the user is reduced!**	📖 205
			0	TRIP		
			2	Warning		
			3	Off		
C0599	Limit LP1	5.0			Monitoring limit for motor phase monitoring (LP1) referred to the current limit.	📖 205
			0.01 {0.01 %} 10.00			

11.2.15 Resolver cable (Sd2)

Error message		Monitoring function	System variable	Possible response			
				TRIP	Message	Warning	Off
082	Sd2	Resolver error	MCTRL_bResolverFault_b	•		✓	✓

• Default setting
✓ Setting possible

This monitoring function monitors the resolver cable and the resolver with regard to open circuit and protects the motor.

Stop!

If monitoring is disconnected, the machine can achieve very high speeds in case of faults (e. g. system cable is disconnected or not correctly screwed), which can result in the damage of the motor and of the driven machine! The same applies if ”warning” is set as a response.

► For commissioning C0586, always use the Lenze setting (TRIP).

► Only use the possibility of disconnection via C0586 if the monitoring is activated without apparent reason (e. g. by very long cables or intense interference injection of other drives).

► Configure C0586 = 2 (warning) only on the above-mentioned condition, because the pulses are enabled despite faulty feedback.

If a fault with regard to the survey of the actual speed value is available, it is not definitely ensured that monitoring is activated with regard to overspeed (NMAX, 📖 211).

This monitoring ...

► is automatically activated if a resolver is selected as an actual speed value encoder via C0419.

► is automatically activated if another actual speed value encoder is selected.

The response is set via C0586.

Code		Possible settings			IMPORTANT	
No.	Designation	Lenze/ {Appl.}	Selection			
C0586	MONIT SD2	0			Configuration of monitoring Resolver ”ResolverFault” (MCTRL Sd2)	📖 206
			0	TRIP		
			2	Warning		
			3	Off		

11.2.16 Motor temperature sensor (Sd6)

Error message		Monitoring function	System variable	Possible response			
				TRIP	Message	Warning	Off
086	Sd6	Thermal sensor error on the motor	MCTRL_bSensorFault_b	✓		✓	•

• Default setting
✓ Setting possible

This monitoring function checks whether the motor temperature sensor supplies values within the measuring range of -50 ... +250 °C. If the values are outside this measuring range, monitoring is activated.

The response is set via C0594.

Code		Possible settings		IMPORTANT	
No.	Designation	Lenze/ {Appl.}	Selection		
C0594	MONIT SD6	3		Configuration of monitoring Motor temperature sensor " SensorFault" (MCTRL Sd6)	📖 207
			0 TRIP		
			2 Warning		
			3 Off		

11.2.17 Absolute value encoder monitoring (Sd7)

Error message		Monitoring function	System variable	Possible response			
				TRIP	Message	Warning	Off
087	Sd7	Absolute value encoder error	MCTRL_bEncoderFault_b	•			

• Default setting
✓ Setting possible

When the ECSxA... axis module is switched on, this monitoring function repeatedly downloads the absolute value of the encoder to identify whether the same value is transferred to the drive.

If a deviation > 5° on the motor shaft is detected, the monitoring (TRIP) is actuated.

The error can only be reset by mains switching!

11.2.18 Sin/cos encoder (Sd8)

Error message		Monitoring function	System variable	Possible response			
				TRIP	Message	Warning	Off
088	sd8	Sin/cos encoder error	MCTRL_bEncoderFault_b	✓			•

• Default setting
✓ Setting possible

This monitoring function identifies via a plausibility check whether the encoder is available and the sin/cos tracks supply plausible values with regard to each other.

► The following sin/cos encoder types are supported:
– Stegmann SCS 60/70 ST 512 single-turn absolute value encoder (512 inc/rev).
– Stegmann SCM 60/70 ST 512 multi-turn absolute value encoder (512 inc/rev).

► The fault ”Sd8” can only be reset by mains switching.

► If required, the encoder has to move by several angular degrees for actuating a fault.

► The response is set via C0580.

► The filter time constant (C0559) serves to filter short-time trouble on the sin/cos track of the encoder without an SD8 trip being released immediately.

Code		Possible settings				IMPORTANT	
No.	Designation	Lenze/ {Appl.}	Selection				
C0580	Monit SD8	3				Configuration of open-circuit monitoring for sin/cos encoders	📖 208
			0	TRIP			
			3	Off			
C0559	SD8 filter t	1				Filter time constant (SD8)	
			1	{1 ms}	200	Example: If the setting is ”10 ms”, a SD8-TRIP is actuated after 10 ms.	

Note!

For the desired encoder monitoring, and in particular when using synchronous machines, set error handling to ”TRIP”.

In order to achieve further encoder reliability, an additional monitoring of following errors can be activated, e. g. with regard to position systems. In doing this, also set the corresponding responses to ”TRIP”.

Visible faults	Non-visible faults
● Unplugged plug, all encoder signals open. ● Singe wire breakage, one of the following signals is missing: – COS A – RefCOS A – SIN B – RefSIN B – GND – VCC ● Double wire breakage with the following signal pairs: – COS A and RefCOS A – SIN B and RefSIN B – COS A and SIN B – RefCOS A and RefSIN B – and all four signals (COS A, RefCOS A, SIN B, RefSIN B) open.	● Short circuits, in particular between sine and cosine signals. ● Cable/encoder faults with intermediate values ● ”Semi”-short circuits (> 0 Ohm) ● ”Semi”-interruptions (< infinite)

11.2.19 Speed not within tolerance margin (nErr)

Error message		Monitoring function	System variable	Possible response				
				TRIP	Message	Warning	FAIL-QSP	Off
190	nErr	Speed beyond tolerance margin (C0576)	MCTRL_bSpeedLoopFault_b	✓	✓	✓	✓	•

• Default setting
✓ Setting possible

This monitoring function compares the actual speed value supplied by the tacho generator to the speed setpoint on the speed controller. If the difference of the two speed values exceeds the tolerance window set in C0576, the monitoring function is actuated.

The subsequent speed behaviour of the drive controller can be evaluated by means of this monitoring.

► If the system deviation exceeds a certain value, this may indicate a drive problem. In this case, the drive somehow is inhibited from following the set speed setpoint. With regard to a generally functional drive controller, this may be caused by mechanical blockades on the load side, or by a motor torque that is not sufficient.

Furthermore, a tacho generator in speed-controlled operation can be protected further on by this monitoring. Thus, the monitoring presents a supplementation to the individual encoder monitoring systems.

► Faults on the encoder system bring about an incorrect actual speed value. This normally results in a system deviation on the speed controller that is greater than that in the normal operating status.

► The tolerance margin is set via C0576.

► The response is set via C0579.

Note!

► Where required, adjust the setpoint ramps and/or the quick stop deceleration time by longer times to the application, so that no fault messages are output.

► Set the tolerance window (C0576) to at least twice the value of the system deviation occurring during operation. The value can be identified by respective tests when commissioning is effected.

Code		Possible settings		IMPORTANT	
No.	Designation	Lenze/ {Appl.}	Selection		
C0576	nErr Window	100		Monitoring window of the speed control error referring to n_{max}. 100 % = lowest monitoring sensitivity	📖 210
			0 {1 %} 100		

Code		Possible settings			IMPORTANT	
No.	Designation	Lenze/ {Appl.}	Selection			
C0579	Monit nErr	3			Configuration of speed control error monitoring	📖 210
			0	TRIP		
			1	Message		
			2	Warning		
			3	Off		
			4	FAIL-QSP		

11.2.20 Maximum speed exceeded (NMAX)

Error message		Monitoring function	System variable	Possible response			
				TRIP	Message	Warning	Off
200	Nmax	Maximum speed exceeded	MCTRL_bNmaxFault_b	•			

• Default setting
✓ Setting possible

The monitoring process is activated when the current speed exceeds the upper speed limit of the system or the double value of C0011 (n_{max}).

Stop!

► With regard to active loads (e. g. hoists), pay attention to the fact that the drive in this case operates without torque. Specific on-site measures are required!

► If the actual speed value encoder fails, it is not provided that this monitoring will be activated.

The upper speed limit of the system (maximum speed) is set via C0596.

Code		Possible settings				IMPORTANT	
No.	Designation	Lenze/ {Appl.}	Selection				
C0596	NMAX limit	5500				Monitoring: Maximum speed of the machine	📖 211
			0	{1 rpm}	16000		

11.2.21 Rotor position adjustment (PL)

Error message		Monitoring function	System variable	Possible response			
				TRIP	Message	Warning	Off
089	PL	Error with regard to rotor position adjustment	MCTRL_bRotorPositionFault_b	•			

• Default setting
✓ Setting possible

This monitoring function observes the correct execution of the rotor position adjustment.

This monitoring function can occur during rotor position adjustment in connection with feedback systems:

- ► Resolver
- ► TTL encoder
- ► Sin/cos encoder
- ► Absolute value encoder (single/multi-turn)

Cause for this is a cancellation of the adjustment routine as a result of

- ► a supply voltage loss
- ► an encoder cable interruption
- ► a routine stop through the deactivation of C0095

Error acknowledgement

1. Remove the cause for the cancellation.
2. Inhibit controller
3. Deactivate rotor position adjustment with C0095 = 0.
4. Execute TRIP-RESET.
5. Activate rotor position adjustment with C0095 = 1.

12 Troubleshooting and fault elimination

Failures can be quickly detected by means of display elements or status messages via the system bus (CAN/CAN-AUX).

Display elements and status messages provide a rough classification of the trouble.

In the chapter ”12.3.2 Causes and remedies” (📖 222) , you can find information on fault elimination.

12.1 Fault analysis

12.1.1 Fault analysis via the LED display

LED		Operating state	Check
Red	Green		
Off	On	Controller enabled, no fault	
Off	Blinking	Controller inhibit (CINH) active, switch-on inhibit	C0183
Blinking	Off	Trouble/fault (TRIP) is active	C0168/1
Blinking	On	Warning/FAIL-QSP is active	C0168/1

12.1.2 Fault analysis with keypad XT EMZ9371BC

The status messages in the display indicate the controller status.

Display	Controller status	Check
RDY	Controller ready for operation, controller can be inhibited.	C0183, C0168/1
IMP	Pulses at the power stage inhibited.	C0183, C0168/1
Imax	Maximum current reached.	
Mmax	Maximum torque reached.	
FAIL	Fault through TRIP, message, fail QSP or warning.	C0183, C0168/1

12.1.3 Fault analysis with the history buffer

The history buffer (C0168) enables you to trace faults. The corresponding fault messages are stored in eight memory locations in the sequence of their occurrence.

Structure of the history buffer

- ► The fields under ”fault history” show the memory locations 2 ... 7.
- ► The fields under ”current faults” indicate memory location 1. It gives information on the active fault.
- ► If the fault is no longer active or has been reset,
  - – all information in the fault memory will be automatically shifted upwards by one subcode.
  - – memory location 1 will be deleted (no active fault). The information on the formerly active fault is now in subcode 2.
  - – the contents of subcode 8 will be eliminated from the history buffer and cannot be read any longer.
- ► The history buffer contains three information units for every fault occurred:
  - – Fault number and response
  - – Time of the last occurrence
  - – Frequency of successive occurrence

Note!

- ► If several faults with different responses occur at the same time, only the fault the response of which has the highest priority is entered in the history buffer.
  - – Power supply module ECSxE:
    TRIP/KSB-TRIP (highest) → message → warning (lowest)
  - – Axis module ECSxS/P/M/A:
    TRIP (highest) → message → FAIL-QSP → warning (lowest)
- ► If several faults with the same response occur at the same time, (e.g. two messages) only the fault that occurred first is entered in the history buffer.
- ► If a fault occurs several times in quick succession, only the time of the last occurrence is entered in the history buffer.

Assignment of information to the codes

Code and retrievable information				contains information on ...
C0168	C0169	C0170	Subcode	
Number and **response** of the fault message	**Time** of the last occurrence of the fault message	**Frequency** of the occurrence of the fault message	1	active fault
			2	last fault
			3	second-to-last fault
			4	third-to-last fault
			5	fourth-to-last fault
			6	fifth-to-last fault
			7	six-to-last fault
			8	seventh-to-last fault

Reset fault message

The current fault message can be reset via a TRIP-RESET (e.g. via C0043):

Code		Possible settings			IMPORTANT	
No.	Designation	Lenze/ {Appl.}	Selection			
C0043	Trip reset				Reset active fault message (TRIP RESET)	
			0	Reset fault message (TRIP RESET)		
			1	Active fault message		

Delete entries in the history buffer

The entries in the history buffer can be deleted via C0167.

► This function only works when no trouble is active.

Code		Possible settings			IMPORTANT	
No.	Designation	Lenze/ {Appl.}	Selection			
C0167	Reset failmem	0			Delete history buffer (C0168)	📖 213
			0	No reaction		
			1	Delete history buffer		

12.1.4 Fault analysis via LECOM status words (C0150/C0155)

The LECOM status words (C0150/C0155) are coded as follows:

Code		Possible settings			IMPORTANT	
No.	Designation	Lenze/ {Appl.}	Selection			
C0150	Status word	0			Status word for networking via automation interface (AIF) Read only	
			0 {1} 65535		Controller evaluates information as 16 bits (binary coded)	
			Bit 0	Not assigned		
			Bit 1	Pulse inhibit (IMP) is active		
			Bit 2	Not assigned		
			Bit 3	Not assigned		
			Bit 4	Not assigned		
			Bit 5	Not assigned		
			Bit 6	n=0		
			Bit 7	Controller inhibit (CINH) is active		
			Bit 8	Controller status		
			Bit 9	Controller status		
			Bit 10	Controller status		
			Bit 11	Controller status		
			Bit 12	Warning is active		
			Bit 13	Message is active		
			Bit 14	Not assigned		
			Bit 15	Not assigned		

Code		Possible settings			IMPORTANT
No.	Designation	Lenze/ {Appl.}	Selection		
C0155	Status word 2	0			Status word 2 (advanced status word) Display only
			0	{1} 65535	Controller interprets information as 16 bit (binary coded)
			Bit 0	Active fault	
			Bit 1	M_{max} reached	
			Bit 2	I_{max} reached	
			Bit 3	Pulse inhibit(IMP)	
			Bit 4	Ready for operation (RDY)	
			Bit 5	Controller inhibit (CINH)	
			Bit 6	TRIP active	
			Bit 7	Initialisation	
			Bit 8	Motor direction of rotation (Cw/CCw)	
			Bit 9	Not assigned	
			Bit 10	Not assigned	
			Bit 11	Not assigned	
			Bit 12	Not assigned	
			Bit 13	Not assigned	
			Bit 14	Not assigned	
			Bit 15	Not assigned	

12.2 Malfunction of the drive

Maloperation/fault	Cause	Remedy
Feedback system		
• Motor rotates CCW when viewed to the motor shaft. • C0060 counts down after controller enable.	Feedback system is not connected in correct phase relation.	Connect feedback system in correct phase relation. The rotor position indicated under C0060 is derived from the position encoder (MCTRL_dnPos_p). Therefore observe the mounting position when using separate feedback systems for position (C0490) and speed (C0495).
Asynchronous motor		
• Motor rotates with I_{max} and half slip frequency. • Motor does not react to setpoint change.	Motor is not connected in correct phase relation.	Connect motor in correct phase relation at the terminals U, V, W.
Synchronous motor		
• Motor does not follow the setpoint change. • I_{max} follows the setpoint selection in idle state.	Motor is not connected in correct phase relation.	Connect motor in correct phase relation at the terminals U, V, W.
• Motor rotates CCW when viewed to the motor shaft. • Synchronous motor accelerates with a speed setpoint = 0 to rated speed. • Torque of synchronous motor is too low.	Rotor angle (offset of electrical and mechanical rotor angle) is not correct.	Carry out rotor position adjustment (C0095 = 1) or set rotor displacement angle manually. **Operate motor without load for this purpose!**
• Motor blocks in certain positions.	The number of pole pairs of the resolver or motor is not set correctly.	Number of pole pairs (C0080) must be set correctly.

12.3 System error messages

12.3.1 Overview of system error messages, error sources and reactions

System error message				Possible settings/response • Lenze setting ✓ Setting possible						Available in		
No.	Display	Source	Meaning	Code	TRIP	Message	Warning	FAIL-QSP	Off	Drive PLC	Servo PLC	ECSxA
x011	OC1	MCTRL	Short circuit in motor cable		•						✓	✓
x012	OC2	MCTRL	Earth fault in motor cable		•						✓	✓
x015	OC5	MCTRL	I x t overload		•						✓	✓
x016	OC6	MCTRL	I^2 x t overload (C0120)		•							✓
x017	OC7	MCTRL	I x t warning (C0123)	C0604	✓		•		✓			✓
x018	OC8	MCTRL	I^2 x t warning (C0127)	C0605	✓		•		✓			✓
x020	OU	MCTRL	Overvoltage in the DC bus			•					✓	✓
x030	LU	MCTRL	Undervoltage in DC bus			•					✓	✓
x032	LP1	MCTRL	Motor phase failure	C0597	✓		✓		•		✓	✓
x050	OH	MCTRL	Heatsink temperature higher than fixed limit temperature		•						✓	✓
x051	OH1	MCTRL	Interior temperature > 90° C		•							✓
x053	OH3	MCTRL	Motor temperature higher than fixed limit temperature	C0583	•				✓		✓	✓
x054	OH4	MCTRL	Heatsink temperature higher than variable limit temperature (C0122)	C0582			•		✓		✓	✓
x055	OH5	MCTRL	Interior temperature > C0124	C0605	✓		•		✓			✓
x057	OH7	MCTRL	Motor temperature higher than variable limit temperature (C0121)	C0584			•		✓		✓	✓
x058	OH8	MCTRL	Motor temperature via inputs T1/T2 is too high	C0585	✓		✓		•		✓	✓
x061	CE0	AIF	Communication error - AIF module⇔PLC	C0126	✓		✓		•	✓	✓	✓
			FIF-CAN / CAN-AUX communication error:									
x062	CE1	CAN1	CAN1_IN (monitoring time can be set with C0357/1)	C0591	✓		✓		•	✓	✓	✓
x063	CE2	CAN2	CAN2_IN (monitoring time can be set with C0357/2)	C0592								
x064	CE3	CAN3	CAN3_IN (monitoring time can be set with C0357/3)	C0593								
x065	CE4	CAN	CAN BUS-OFF status (too many faulty telegrams received)	C0595	✓		✓		•	✓	✓	✓
x066	CE5	CAN	CAN time-out (gateway function C0370)	C0603	✓		✓		•	✓	✓	✓

x: 0 = TRIP, 1 = Message, 2 = Warning, 3 = FAIL-QSP

System error message				Possible settings/response • Lenze setting ✓ Setting possible						Available in		
No.	Display	Source	Meaning	Code	TRIP	Message	Warning	FAIL-QSP	Off	Drive PLC	Servo PLC	ECSxA
x070	U15	internal	Undervoltage of internal 15 V voltage supply		•					✓	✓	✓
x071	CCr	internal	Internal fault [1]		•					✓	✓	✓
x072	PR1	internal	Checksum error in parameter set 1		•					✓	✓	✓
x074	PEr	internal	Program error [1]		•					✓	✓	✓
x075	PR0	internal	General parameter set fault [1]		•					✓	✓	✓
x076	PR5	internal	Error saving parameters		•					✓		✓
x079	PI	internal	Fault during parameter initialisation [1]		•					✓	✓	✓
x080	PR6	internal	Too many user codes		•					✓	✓	✓
x082	Sd2	MCTRL	Resolver error	C0586	•		✓		✓		✓	✓
x083	Sd3	MCTRL	Encoder error at X9 pin 8	C0587	✓		✓		•		✓	
x085	Sd5	MCTRL	Encoder error at analog input (X6) (C0034 = 1)	C0598	✓		✓		•		✓	✓
x086	Sd6	MCTRL	Motor temperature sensor error (X7 or X8)	C0594	•		✓		✓		✓	✓
x087	Sd7	MCTRL	Absolute value encoder error at X8 [1]	C0025	•						✓	✓
x088	sd8	MCTRL	Absolute value encoder error at X8 [1]	C0580	✓				•		✓	✓
x089	PL	MCTRL	Error with regard to rotor position adjustment		•						✓	✓
x091	EEr	FWM	External monitoring actuated via DCTRL	C0581	•	✓	✓	✓	✓		✓	✓
x105	H05	internal	Internal fault (memory)		•					✓	✓	✓
x107	H07	internal	Internal fault (power stage)		•						✓	✓
x108	H08	internal	Extension board not connected correctly or not supported by program		•					✓		✓
x110	H10	FWM	Heatsink temperature sensor error	C0588	•				✓		✓	✓
x111	H11	FWM	Thermal sensor error in the interior of the device		•				✓		✓	✓

x: 0 = TRIP, 1 = Message, 2 = Warning, 3 = FAIL-QSP

[1] Completely deenergise device after error correction!

System error message				Possible settings/response • Lenze setting ✓ Setting possible						Available in		
No.	Display	Source	Meaning	Code	TRIP	Message	Warning	FAIL-QSP	Off	Drive PLC	Servo PLC	ECSxA
			FIF-CAN / CAN-AUX communication error:									
x122	CE11	FIF-CAN1	FIF-CAN1_IN (monitoring time can be set with C2457/1)	C0591	✓		✓		•	✓		
		CANaux1	CANaux1_IN (monitoring time can be set with C2457/1)	C2481	✓		✓		•			✓
x123	CE12	FIF-CAN2	FIF-CAN2_IN (monitoring time can be set with C2457/2)	C0592	✓		✓		•	✓		
		CANaux2	CANaux2_IN (monitoring time can be set with C2457/2)	C2482	✓		✓		•			✓
x124	CE13	FIF-CAN3	FIF-CAN3_IN (monitoring time can be set with C2457/3)	C0593	✓		✓		•	✓		
		CANaux3	CANaux3_IN (monitoring time can be set with C2457/3)	C2483	✓		✓		•			✓
x125	CE14	FIF-CAN	BUS-OFF status of FIF-CAN (too many faulty telegrams received)	C0595	✓		✓		•	✓		
		CANaux	BUS-OFF state CAN AUX (too many faulty telegrams received)	C2484	✓		✓		•			✓
x126	CE15	CANaux	Communication error of gateway function (C0370, C0371) via CAN-AUX	C2485	✓		✓		•			✓
x190	nErr	MCTRL	Speed beyond tolerance margin (C0576)	C0579	✓	✓	✓	✓	•		✓	✓
x200	Nmax	MCTRL	Maximum speed exceeded (C0596)		•						✓	✓
			Time-out (see task configuration):									
x201	overrun Task1	internal	Task with ID 2	2)	•		✓	✓		✓	✓	✓
x202	overrun Task2		Task with ID 3									
x203	overrun Task3		Task with ID 4									
x204	overrun Task4		Task with ID 5									
x205	overrun Task5		Task with ID 6									
x206	overrun Task6		Task with ID 7									
x207	overrun Task7		Task with ID 8									
x208	overrun Task8		Task with ID 9									
x219	overrun Cycl.-T	internal	Time-out in cyclic task (PLC_PRG, ID 1)	2)	•		✓	✓		✓	✓	✓

x: 0 = TRIP, 1 = Message, 2 = Warning, 3 = FAIL-QSP

2) Can be set in DDS under **Project → Exception handling**

System error message				Possible settings/response • Lenze setting ✓ Setting possible						Available in		
No.	Display	Source	Meaning	Code	TRIP	Message	Warning	FAIL-QSP	Off	Drive PLC	Servo PLC	ECSxA
			Floating-point error (REAL) in:									
x209	float Sys-T	internal	System task	2)	•		✓	✓		✓	✓	✓
x210	float Cycl.-T		Cyclic task (PLC_PRG, ID 1)									
x211	float T Id2		Task with ID 2									
x212	float T Id3		Task with ID 3									
x213	float T Id4		Task with ID 4									
x214	float T Id5		Task with ID 5									
x215	float T Id6		Task with ID 6									
x216	float T Id7		Task with ID 7									
x217	float T Id8		Task with ID 8									
x218	float T Id9		Task with ID 9									
x220	NoT-FktCredit	internal	Not enough technology units available in the PLC		•					✓	✓	✓
x230	No Program	internal	No PLC program loaded		•					✓	✓	✓
x231	Unallowed Lib	internal	In the PLC program a library function was called which is not supported		•					✓	✓	✓
x232	NoCamData	internal	Motion profiles (cam data) are not available		•					✓	✓	✓
			Free CAN objects:									
x240	ovrTransQueue	free CAN obj.	Overflow of transmit request memory	C0608	•	✓	✓	✓ 3)	✓	✓	✓	✓
x241	ovr Receive		Too many receive telegrams	C0609	•			✓			✓	✓
			Application memory (FLASH):									
x250	2.Flash Err	internal	Access not possible 1) (FLASH memory damaged or not available)		•						✓	
x251	AddData CsErr	internal	Checksum error when loading data into the FLASH memory									
x252	AddData DlErr	internal	Error when downloading data into the FLASH memory (e.g. time-out)									
x260	Err NodeGuard	Node guarding	”Life guarding event”: The PLC as a CAN slave has not received any ”node guarding” telegram within the node lifetime of the CAN master.	C0384	•	✓	✓	✓ 3)	✓	✓	✓	✓

x: 0 = TRIP, 1 = Message, 2 = Warning, 3 = FAIL-QSP

1) Completely deenergise device after error correction!

2) Can be set in DDS under **Project → Exception handling**

3) Only for 9300 Servo PLC!

12.3.2 Causes and remedies

Tip!

When the fault messages are retrieved via the system bus (CAN) they are displayed as a number (see column “fault number –number” in the following table).

Fault message		Description	Cause	Remedy
No.	Display			
---	---	No fault	-	-
0011	OC1	Short circuit of motor cable	Short circuit	• Search for cause of short circuit. • Check motor cable.
			Excessive capacitive charging current in the motor cable.	Use motor cable which is shorter or of lower capacitance.
0012	OC2	Motor cable earth fault	One of the motor phases has earth contact.	• Search for cause of short circuit. • Check motor cable.
0015	OC5	I x t overload	• Frequent and too long acceleration with overcurrent • Continuous overload with I_{motor} > 1.05 x $I_{rx.}$	Check drive dimensioning.
0016	OC6	I^2 x t overload TRIP (motor, C0120)	Current overload of the motor, e.g. due to: • frequent or too long acceleration processes • impermissible continuous current	• Check drive dimensioning. • Check setting of C0120.
x017	OC7	I x t overload warning (axis module, C0123)	Current overload of the axis module > C0123 (e.g. due to frequent or too long acceleration phases)	• Check drive dimensioning. • Check setting of C0123.
x018	OC8	I^2 x t overload warning (motor, C0127)	Current overload of the motor > C0127 (e.g. due to frequent or too long acceleration phases)	• Check drive dimensioning. • Check setting of C0127.
1020	OU	Overvoltage in DC bus	Braking energy is too high. (DC-bus voltage is higher than set in C0173.)	• Use braking unit or regenerative module. • Check dimensioning of the brake resistance.
1030	LU	Undervoltage in DC bus	DC-bus voltage is lower than specified under C0174.	• Check mains voltage. • Check power supply module.
x032	LP1	Motor phase failure	A current-carrying motor phase has failed.	• Check motor. • Check motor cable. • Switch off monitoring (C0597 = 3).
			The current limit value is set too low.	• Set higher current limit value via C0599.
x041	AP1	Internal fault		Contact Lenze.
0050	OH	Heatsink temperature > +90 °C	Ambient temperature T_u > +40 °C or > +50 °C	• Allow module to cool and ensure better ventilation. • Check ambient temperature in the control cabinet.
			Heatsink is very dirty.	Clean heatsink.
			Wrong mounting position	Change mounting position.
x: 0 = TRIP, 1 = Message, 2 = Warning, 3 = FAIL-QSP				

Fault message		Description	Cause	Remedy
No.	Display			
0051	OH1	Interior temperature > +90 °C	Ambient temperature T_u > +40 °C or > +50 °C	● Allow module to cool and ensure better ventilation. ● Check ambient temperature in the control cabinet.
			Wrong mounting position	Change mounting position.
x053	OH3	Motor temperature > +150 °C threshold (temperature detection via resolver or incremental value encoder)	Motor is thermally overloaded due to: ● Impermissible continuous current ● Frequent or too long acceleration processes	● Check drive dimensioning. ● Switch off monitoring (C0583 = 3).
			No PTC/temperature contact connected.	Correct wiring.
x054	OH4	Heatsink temperature > C0122	Ambient temperature T_u > +40 °C or > +50 °C	● Allow module to cool and ensure better ventilation. ● Check ambient temperature in the control cabinet. ● Switch off monitoring (C0582 = 3).
			Heatsink is very dirty.	Clean heatsink
			Wrong mounting position	Change mounting position.
			The value specified under C0122 is set too low.	Enter a higher value under C0122.
x055	OH5	Interior temperature > C0124		● Allow module to cool and ensure better ventilation. ● Check ambient temperature in the control cabinet. ● Switch off monitoring (C0605 = 3).
			The value under C0124 is set too low.	Enter a higher value under C0124.
x057	OH7	Motor temperature > C0121 (temperature detection via resolver or incremental value encoder)	Motor is thermally overloaded due to: ● Impermissible continuous current ● Frequent or too long acceleration processes	● Check drive dimensioning. ● Switch off monitoring (C0584 = 3).
			No PTC/temperature contact connected.	Correct wiring.
			The value specified under C0121 is set too low.	Enter a higher value in C0121.
x058	OH8	Motor temperature via inputs T1 and T2 is too high.	Motor is thermally overloaded due to: ● Impermissible continuous current ● Frequent or too long acceleration processes	● Check drive dimensioning. ● Switch off monitoring (C0585 = 3).
			Terminals T1 and T2 are not connected	Connect PTC/temperature contact.
x061	CE0	Automation interface (AIF) communication error	Faulty transfer of control commands via AIF.	● Plug in the communication module/keypad XT firmly, screw down, if necessary. ● Switch off monitoring (C0126 = 3).

x: 0 = TRIP, 1 = Message, 2 = Warning, 3 = FAIL-QSP

Fault message		Description	Cause	Remedy
No.	Display			
x062	CE1	Communication error on the process data input object CAN1_IN	CAN1_IN object receives faulty data or communication is interrupted.	• Check wiring at X4. • Check sender. • Increase monitoring time under C0357/1, if necessary. • Switch off monitoring (C0591 = 3).
x063	CE2	Communication error on the process data input object CAN2_IN	CAN2_IN object receives faulty data or communication is interrupted.	• Check wiring at X4. • Check sender. • Increase monitoring time under C0357/2, if necessary. • Switch off monitoring (C0592 = 3).
x064	CE3	Communication error on the process data input object CAN3_IN	CAN3_IN object receives faulty data or communication is interrupted.	• Check wiring at X4. • Check sender. • Increase monitoring time under C0357/3, if necessary. • Switch off monitoring (C0593 = 3).
x065	CE4	BUS-OFF state of system bus (CAN), interface X4	The module has received too many incorrect telegrams via the system bus (CAN) and has disconnected from the bus	• Check wiring at X4: bus termination available? • Check screen contact of the cables. • Check PE connection. • Check bus load, reduce baud rate, if necessary (Observe cable length!) • Switch off monitoring (C0595 = 3).
x066	CE5	System bus (CAN) time-out (communication error of gateway function), interface X4	For remote parameterisation (C0370, C0371) via system bus (CAN): • Slave does not respond. • Communication monitoring time has been exceeded.	• Check wiring at X4. • Check CAN bus configuration. • Switch off monitoring (C0603 = 3).
0070	U15	Undervoltage of internal 15 V voltage supply		Check voltage supply.
0071	CCr	System failure	Strong interference injection on the control cables	Screen control cables
			Ground or earth loops in the wiring	• Check wiring • Check PE connection
				After troubleshooting: Deenergise the device completely (disconnect 24 V supply, discharge DC bus)!
0072	PR1	Checksum error in parameter set 1 **CAUTION: The Lenze setting is loaded automatically!**	• Fault when loading a parameter set. • Interruption while transmitting the parameter set via keypad.	• Set the required parameters and store them under C0003 = 1. • As to PLC devices, check the use of pointers.
			The stored parameters are incompatible with the loaded software version.	Store the parameter set under C0003 = 1 first to allow for a faults reset.

x: 0 = TRIP, 1 = Message, 2 = Warning, 3 = FAIL-QSP

Fault message		Description	Cause	Remedy
No.	Display			
0074	PEr	Program error	Error in the program flow	• Check use of pointers. • Send module with PLC program and parameter set to Lenze (on floppy disk/CD-ROM).
0075	PR0	Error in parameter set.	The operating system software has been updated.	Storage of the Lenze setting C0003 = 1.
				After troubleshooting: Deenergise the device completely (disconnect 24 V supply, discharge DC bus)!
0076	PR5	Memory error	Error saving parameters in the fail-safe memory area.	Contact Lenze
0079	PI	Fault during parameter initialisation	• An error has been detected during parameter set transfer between two controllers. • Parameter set does not match the controller, e.g. when data were transmitted from a controller with more performance to a controller with less performance.	• Correct parameter set. • Check code initialisation values. **After fault correction: completely deenergise the device (switch off 24 V supply, discharge DC bus)!**
0080	PR6	**With ECSxS/P/M:** internal error		Contact Lenze.
		With ECSxA: too many user codes		Reduce number of user codes.
x082	Sd2	Resolver error at X7	Resolver cable is interrupted.	• Check cable for wire breakage. • Check resolver. • Switch off monitoring (C0586 = 3).
			Excitation amplitude is too low.	Increase excitation amplitude of resolver (C0416). Check control factor of resolver under C0414 (as of operating system V8.0).
x085	Sd5	Master current value encoder error at analog input X6/AI+, AI- (C0034 = 1)	Master current value at X6/AI+, AI- < 2mA	• Check cable for wire breakage. • Check master current value encoder. • Switch off monitoring (C0598 = 3). • Check control factor of resolver under C0414 (as of operating system V8.0).
x086	Sd6	Motor temperature sensor error (X7 or X8)	Encoder for detecting the motor temperature at X7 or X8 indicates undefined values.	• Check cable for firm connection. • Switch off the monitoring (C0594 = 3).
x: 0 = TRIP, 1 = Message, 2 = Warning, 3 = FAIL-QSP				

Fault message		Description	Cause	Remedy
No.	Display			
x087	sd7	Initialisation error of absolute value encoder at X8	• Defect of the encoder electronics • Absolute value encoder at X8 does not send any data. **Tip:** The encoder may not rotate during mains switching.	• Check cable at X8 with regard to tight fit and open circuit. • Check absolute value encoder with regard to correct function. • Set voltage supply to 8.1 V via C0421. • No Stegmann encoder connected. • Replace defective encoder.
		Communication error of absolute value encoder at X8 during rotor position adjustment	A rotor position adjustment via C0095 = 1 could not be completed successfully.	Repeat rotor position adjustment. **Note:** After an Sd7 fault it is absolutely required to carry out a further rotor position adjustment. Otherwise the drive may carry out uncontrolled movements after controller enable. The drive may not be commissioned without having carried out a rotor position adjustment successfully!
				After fault correction: completely deenergise the device (switch off 24 V supply, discharge DC bus)!
x088	SD8	SinCos encoder at X8 sends inconsistent data.	The tracks in the SinCos encoder are damaged.	Replace SinCos encoder.
			Interference level on the encoder cable is too high.	• Check correct shield connection of encoder cable. • Where required, decelerate the actuation of the fault message via the filter time constant. Setting: – for ECSxS/P/M/A in C0559. – for 9300 servo cam in C0575.
		SinCos encoder at X8 does not send any data.	Open circuit.	Check cable with regard to open circuit.
			Incorrect encoder connected.	Connect SinCos encoder of the company Stegmann.
			SinCos encoder defective.	Replace SinCos encoder.
			Supply voltage set incorrectly.	Set voltage supply in C0421.
				After fault correction: completely deenergise the device (switch off 24 V supply, discharge DC bus)!
x089	PL	Error during rotor position adjustment	• Sd7 fault during rotor position adjustment with absolute value encoder after mains switching • Cancellation of rotor position adjustment (e.g. by C0095 = 0 or switching off)	1. Activate rotor position adjustment with C0095 = 1. 2. Carry out TRIP reset. 3. Repeat rotor position adjustment.
x091	EEr	External monitoring has been triggered via **DCTRL**.	A digital signal assigned to the TRIP-SET function has been activated.	• Check external encoder. • Switch off the monitoring (C0581 = 3).
x095	FAN1	Fan monitoring (for built-in units)	Heatsink fan is locked, dirty or defect.	Clean or exchange heatsink fan.
0105	H05	Internal fault (memory)		Contact Lenze.
0107	H07	Internal fault (power stage)	During initialisation of the controller, an incorrect power stage was detected.	Contact Lenze.

x: 0 = TRIP, 1 = Message, 2 = Warning, 3 = FAIL-QSP

Fault message		Description	Cause	Remedy
No.	Display			
x108	H08	”Extension board” error	”Extension board” not connected correctly.	• Connect ”extension board” correctly. • Check connector.
			”Extension board” is not supported by PLC program.	• Adapt PLC program to ”extension board”. • Use ”extension board” which is supported by PLC program.
x110	H10	Heatsink temperature sensor error	Sensor for detecting the heatsink temperature indicates undefined values.	• Contact Lenze. • Switch off the monitoring (C0588 = 3).
x111	H11	Temperature sensor error: Temperature inside the controller	Sensor for detecting the internal temperature indicates undefined values.	• Contact Lenze. • Switch off the monitoring (C0588 = 3).
x122	CE11	Communication error at the process data input object CANaux1_IN	CANaux1_IN object receives faulty data or communication is interrupted.	• Check wiring at X14. • Check transmitter. • Increase monitoring time under C2457/1, if necessary. • Switch off monitoring (C2481 = 3).
x123	CE12	Communication error at the process data input object CANaux2_IN	CANaux2_IN object receives faulty data or communication is interrupted.	• Check wiring at X14. • Check transmitter. • Increase monitoring time under C2457/2, if necessary. • Switch off monitoring (C2482 = 3).
x124	ce13	Communication error at the process data input object CANaux3_IN	CANaux3_IN object receives faulty data or communication is interrupted.	• Check wiring on X14. • Check transmitter. • Increase monitoring time under C2457/3, if necessary. • Switch off monitoring (C2483 = 3).
x125	CE14	BUS-OFF state of system bus (CAN), interface X14	The module has received too many incorrect telegrams via the system bus (CAN) and has disconnected from the bus	• Check wiring at X14: bus termination available? • Check screen contact of the cables. • Check PE connection. • Check bus load, reduce baud rate, if necessary (Observe cable length!) • Switch off monitoring (C2484 = 3).
x126	CE15	System bus (CAN) time-out (communication error of gateway function), interface X14	For remote parameterisation (C0370, C0371) via system bus (CAN): • Slave does not respond. • Communication monitoring time has been exceeded.	• Check wiring at X14. • Check CAN bus configuration. • Switch off monitoring (C2485 = 3).
1131	PRM	Parameter error motor data	The motor parameters set are not plausible.	Check the motor parameters set (especially C0084, C0085, C0088, C0090).
x190	nErr	Speed control error (Speed out of tolerance margin (C0576))	• Active load (e.g. for hoists) is too high. • Mechanical blockades on the load side	Check drive dimensioning.
x191	HSF	Internal error		Contact Lenze.
x200	Nmax	Maximum speed (C0596) has been exceeded.	• Active load (e.g. for hoists) is too high • Drive is not speed-controlled, torque is excessively limited.	• Check drive dimensioning. • Possibly increase torque limit. • Switch off monitoring (C0607 = 3).

x: 0 = TRIP, 1 = Message, 2 = Warning, 3 = FAIL-QSP

Fault message		Description	Cause	Remedy
No.	Display			
0201 ... 0208	overrun Task1 ... overrun Task8	Time-out in task 1 (ID 2) ... Time-out in task 8 (ID 9)	Task processing takes longer than the monitoring time set.	● Adjust the length of the task runtime. ● Adjust monitoring time. ● Determine the cause of time-out by checking the task runtime at the task monitor. ● Swap out time-critical program parts in a slower task.
0209	float Sys-T	Float error in system task (ID 0)	Error in real calculation (e. g. division by 0)	Check calculations (program code).
0210	float Cycl.-T	Float error in cyclic task (PLC_PRG ID 1)		
0211 ... 0218	float Task1 ... float Task8	Float error in task 1 (ID 2) ... Float error in task 8 (ID 9)		
0219	overrun Cyc.-T	Time-out in cyclic task (PLC_PRG ID 1)	Task processing takes longer than the monitoring time set.	● Adjust the length of the task runtime. ● Adjust monitoring time. ● Determine the cause of time-out by checking the task runtime at the task monitor. ● Swap out time-critical program parts in a slower task.
0220	noT-Fkt Credit	Not enough technology units available.	A program with technology functions has been tried to be loaded to a controller not providing the corresponding units.	● Use technology variant of the controller. ● Contact Lenze, if necessary.
0230	No Program	Missing PLC program	No PLC program loaded.	Load PLC program.
0231	Unallowed Lib	PLC program calls invalid library function.	In the PLC program a library function has been called which is not supported by the controller (e.g. because the corresponding hardware is missing).	● Remove library function or ensure that the corresponding hardware is available. ● Contact Lenze, if necessary.
0232	NoCam Data	Motion profiles (cam data) are not available.	When calling functions of the function library **LenzeCamControl.lib** it was detected that there are no motion profiles (CAM data) loaded in the memory of the controller.	● Ensure that the valid cam data has been attached to the project via the DDS CAM support. ● Reload the PLC program into the controller. (Possibly the command **Online→Reset (origin)** has been executed in DDS.)
x240	ovrTrans Queue	”Free CAN objects” error	Overflow of the transmit request memory	● Reduce the number of transmit requests. ● Prolong the cycle time.
x241	ovr Receive		Too many receive telegrams	Reduce the number of telegrams on the system bus (CAN).
x260	Err Node Guard	”Life guarding event”	The controller configured as CAN slave does not receive a ”Node Guarding” telegram within the ”Node Life Time” from the CAN master.	● Check wiring at X4. ● Check CAN configuration. ● Make sure that ”Node Guarding” has been activated in the CAN master. ● Adapt ”Node Life Time” (C0382) to the setting in the CAN master.

x: 0 = TRIP, 1 = Message, 2 = Warning, 3 = FAIL-QSP

12.3.3 Resetting system error messages

Reaction	Measures to reset the fault message
TRIP/ FAIL-QSP	**Note!** If a TRIP/FAIL QSP source is still active, the pending TRIP/FAIL QSP cannot be reset. The TRIP/FAIL QSP can be reset by: ● pressing ⇨ STOP on keypad XT EMZ9371 BC. Then, press RUN to re-enable the controller. ● Set code C0043 = 0. ● Control word C0135, bit 11 ● Control word AIF ● Control word system bus (CAN) / MotionBus (CAN) at ECSxS/P/M After the reset of the TRIP/FAIL QSP, the drive remains at standstill.
Message	**Danger!** The fault message is reset automatically after the fault has been eliminated, and the drive restarts automatically.
Warning	After the fault has been eliminated, the fault message is reset automatically.

13 System blocks

The following sections inform about the system blocks of the basic unit.

13.1 AIF_IO_Management (node number 161)

13.1.1 Inputs_AIF_Management

This SB serves to monitor the communication of a fieldbus module connected to the automation interface (AIF).

- In the event of an error, *AIF_bCe0CommErr_b* is set to TRUE and the communication error ”CE0” (LECOM no. 61) is set. The response to this can be configured via C0126 (default setting: off).
- New AIF fielbus modules (e. g. 2133 and 2175) also use *AIF_bFieldBusStateBit0_b* ... *AIF_bFieldBusStateBit15_b* to transfer an error number from the fieldbus module.
- C2121 serves to display the status.

Please read the documentation for the connected fieldbus module.

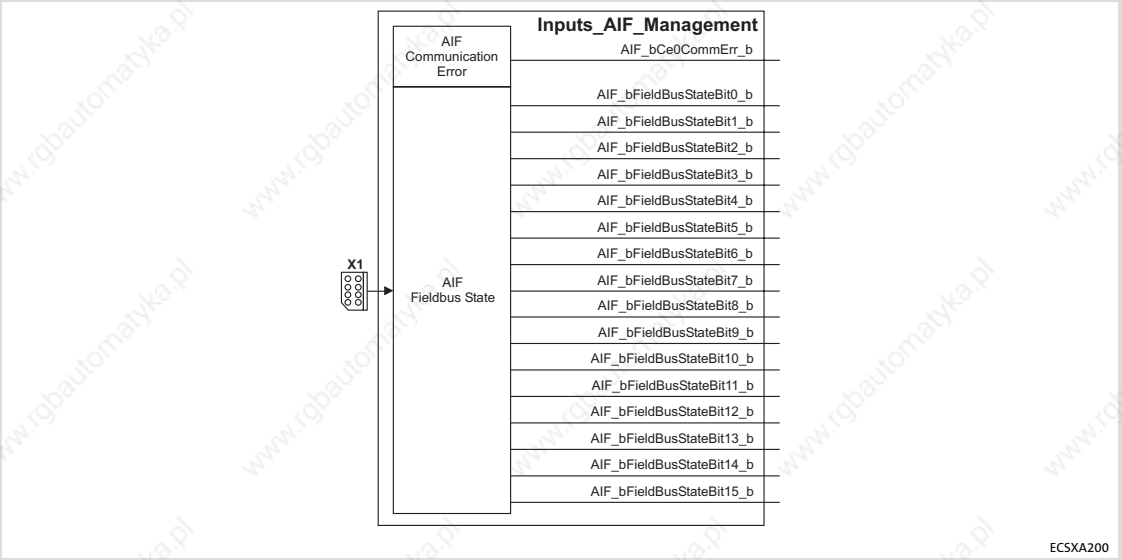

Fig. 13-1 System block ”Inputs_AIF_Management”

System variables

Variable	Data type	Signal type	Address	Display code	Display format	Comments
AIF_bCe0CommErr_b	Bool	binary	%IX161.0.0	–	–	Communication error ”CE0”
AIF_bFieldBusStateBit0_b			%IX161.1.0	–	–	Error number – bit 0
AIF_bFieldBusStateBit1_b			%IX161.1.1	–	–	Error number – bit 1
AIF_bFieldBusStateBit2_b			%IX161.1.2	–	–	Error number – bit 2
AIF_bFieldBusStateBit3_b			%IX161.1.3	–	–	Error number – bit 3
AIF_bFieldBusStateBit4_b			%IX161.1.4	–	–	Error number – bit 4
AIF_bFieldBusStateBit5_b			%IX161.1.5	–	–	Error number – bit 5
AIF_bFieldBusStateBit6_b			%IX161.1.6	–	–	Error number – bit 6
AIF_bFieldBusStateBit7_b			%IX161.1.7	–	–	Error number – bit 7
AIF_bFieldBusStateBit8_b			%IX161.1.8	–	–	Error number – bit 8
AIF_bFieldBusStateBit9_b			%IX161.1.9	–	–	Error number – bit 9
AIF_bFieldBusStateBit10_b			%IX161.1.10	–	–	Error number – bit 10
AIF_bFieldBusStateBit11_b			%IX161.1.11	–	–	Error number – bit 11
AIF_bFieldBusStateBit12_b			%IX161.1.12	–	–	Error number – bit 12
AIF_bFieldBusStateBit13_b			%IX161.1.13	–	–	Error number – bit 13
AIF_bFieldBusStateBit14_b			%IX161.1.14	–	–	Error number – bit 14
AIF_bFieldBusStateBit15_b			%IX161.1.15	–	–	Error number – bit 15

Codes

Code		Possible settings			IMPORTANT	
No.	Designation	Lenze/ {Appl.}	Selection			
C0126	MONIT CE0	3			Monitoring of the communication via AIF interface X1. ● Under C2382, you can select whether controller inhibit (CINH) or quick stop (QSP) is activated when a CE0 fault occurs.	📖 231
			0	TRIP	A communication error activates the set CE0 response.	
			2	Warning		
			3	Off	Monitoring is switched off.	

Code		Possible settings			IMPORTANT
No.	Designation	Lenze/ {Appl.}	Selection		
C2121	AIF:State				AIF-CAN: Status ● For detailed information: see description of the corresponding fieldbus module. Read only
			1	{1} 255	Binary interpretation reflects bit states.
			Bit 0	XCAN1_IN monitoring time	
			Bit 1	XCAN2_IN monitoring time	
			Bit2	XCAN3_IN monitoring time	
			Bit 3	XCAN bus off	
			Bit4	XCAN operational	
			Bit5	XCAN pre-operational	
			Bit 6	XCAN warning	
			Bit 7	Assigned internally	

13.1.2 Outputs_AIF_Management

This SB serves to transfer commands and messages to a fieldbus module connected to the automation interface (AIF).

For this purpose, a control word is available via C2120. The commands are preselected as numbers. Some of the command numbers present a universally valid character for all fieldbus modules, others can be specifically applied to the different components. Altogether up to 16 commands can be available.

Please read the documentation for the connected fieldbus module.

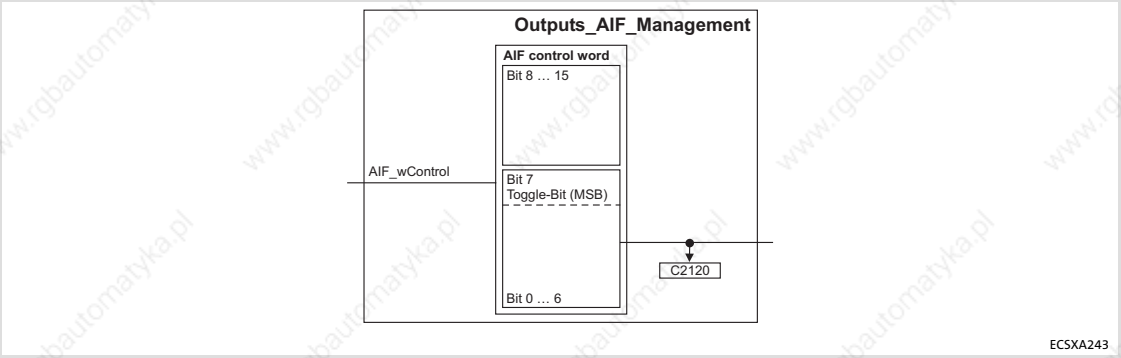

Fig. 13-2 System block "Outputs_AIF_Management"

System variables

Variable	Data type	Signal type	Address	Display code	Display format	Notes
AIF_wControl	Word	–	%QX161.0	C2120	–	

Codes

Code		Possible settings			IMPORTANT	
No.	Designation	Lenze/ {Appl.}	Selection			
C2120	AIF: Control	0			AIF-CAN: control word	📖 234
			0	{1} 255	Binary interpretation reflects bit states	
			0	No command	**Note:** The MSB (bit 7) of the control word automatically changes its state with every access to the code. Observe this when interpreting the data!	
			1	Read XCAN codes + reinitialisation		
			2	Read XCAN code		
			10	Read XCAN C2356/1 ... 4		
			11	Read XCAN C2357		
			12	Read XCAN C2375		
			13	Read XCAN C2376 ... C2378		
			14	Read XCAN C2382		
			255	Not assigned		

13.2 AIF1_IO_AutomationInterface (node number 41)

13.2.1 Inputs_AIF1

This SB is used as an interface for input signals (e.g. setpoints/actual values) to the attached fieldbus module (e.g. INTERBUS, PROFIBUS-DP).

The process image is

- created in the cyclic task by means of a fixed set time interval of 10 ms.
- created in an interval task within the time set for this task.
- read at the beginning of the task and written at its end.

Please read the documentation for the connected fieldbus module.

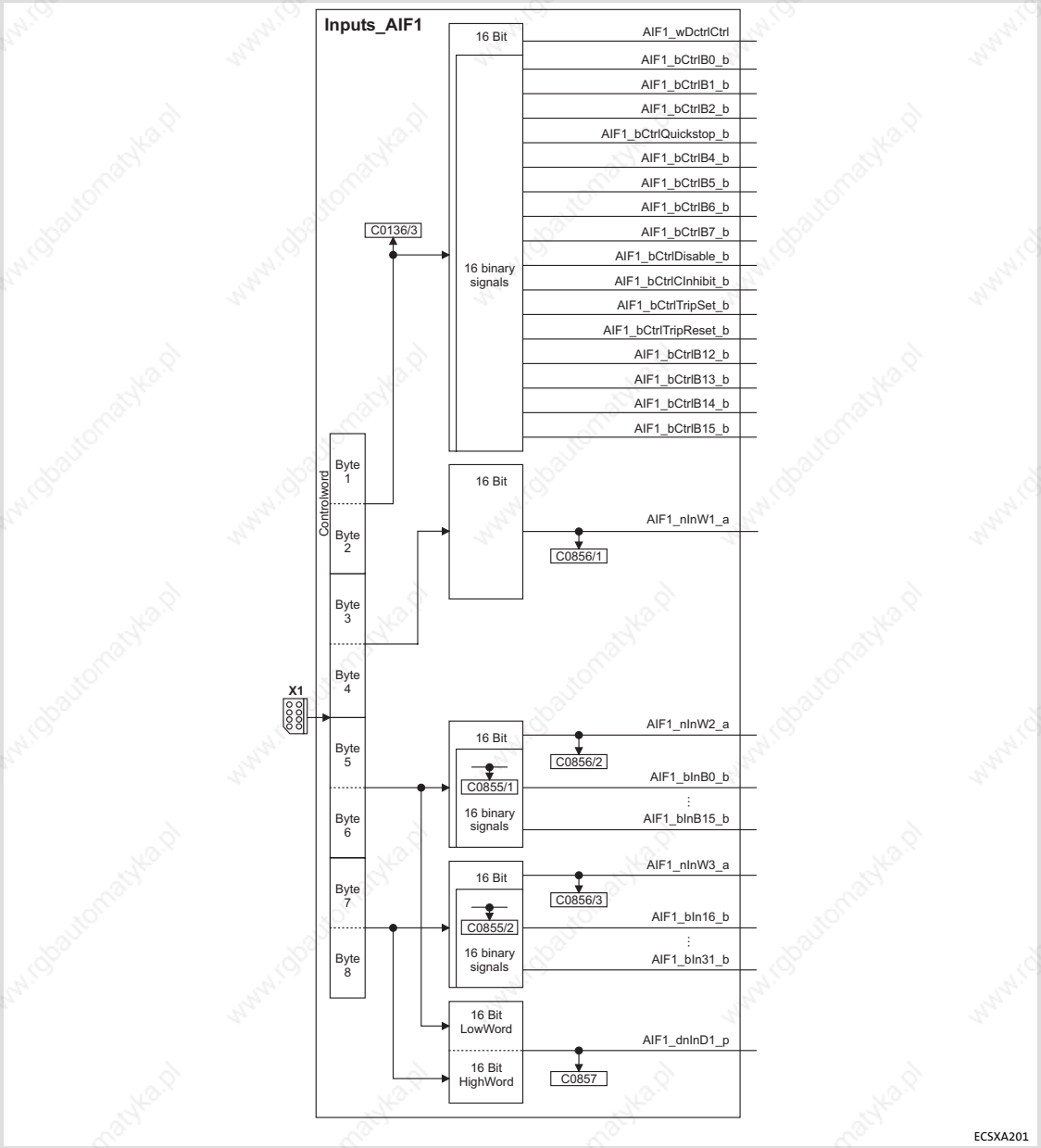

Fig. 13-3 System block "Inputs_AIF1"

System variables

Variable	Data type	Signal type	Address	Display code	Display format	Comments
AIF1_wDctrlCtrl	Word	–	%IW41.0	C0136/3	hex	
AIF1_bCtrlB0_b	BOOL	binary	%IX41.0.0	C0136/3	bin	
AIF1_bCtrlB1_b			%IX41.0.1			
AIF1_bCtrlB2_b			%IX41.0.2			
AIF1_bCtrlQuickstop_b			%IX41.0.3			
AIF1_bCtrlB4_b			%IX41.0.4			
AIF1_bCtrlB5_b			%IX41.0.5			
AIF1_bCtrlB6_b			%IX41.0.6			
AIF1_bCtrlB7_b			%IX41.0.7			
AIF1_bCtrlDisable_b			%IX41.0.8			
AIF1_bCtrlCInhibit_b			%IX41.0.9			
AIF1_bCtrlTripSet_b			%IX41.0.10			
AIF1_bCtrlTripReset_b			%IX41.0.11			
AIF1_bCtrlB12_b			%IX41.0.12			
AIF1_bCtrlB13_b			%IX41.0.13			
AIF1_bCtrlB14_b			%IX41.0.14			
AIF1_bCtrlB15_b			%IX41.0.15			
AIF1_nInW1_a	integer	analog	%IW41.1	C0856/1	dec [%]	
AIF1_nInW2_a			%IW41.2	C0856/2		
AIF1_nInW3_a			%IW41.3	C0856/3		
AIF1_bInB0_b ... AIF1_bInB15_b	BOOL	binary	%IX41.2.0 ... %IX41.2.15	C0855/1	hex	
AIF1_bInB16_b ... AIF1_bInB31_b			%IX41.3.0 ... %IX41.3.15	C0855/2		
AIF1_dnInD1_p	double integer	position	%ID41.1	C0857	dec [inc]	

User data

The 8 bytes of received user data are assigned to several variables of different data types. According to requirements, they can thus be evaluated by the PLC program as:

- ► binary information (1 bit)
- ► control word/quasi-analog value (16 bit)
- ► angle information (32 bit)

Byte	Variable (1 bit)	Variable (16 bit)	Variable (32 bit)
1, 2	AIF1_bCtrlB0_b AIF1_bCtrlB1_b AIF1_bCtrlB2_b AIF1_bCtrlQuickstop_b AIF1_bCtrlB4_b ... AIF1_bCtrlB7_b AIF1_bCtrlDisable_b AIF1_bCtrlCInhibit_b AIF1_bCtrlTripSet_b AIF1_bCtrlTripReset_b AIF1_bCtrlB12_b ... AIF1_bCtrlB15_b	AIF1_wDctrlCtrl	
	The quick stop (QSP), DISABLE, CINH, TRIP-SET and TRIP-RESET functions can be controlled via the following variables (control signals): ● *AIF1_bCtrlQuickstop_b* ● *AIF1_bCtrlDisable_b* ● *AIF1_bCtrlCInhibit_b* ● *AIF1_bCtrlTripSet_b* ● *AIF1_bCtrlTripReset_b* The remaining 11 bits (AIF1_bCtrlB..._b) can be used to control other functions/function blocks.		
3, 4		AIF1_nInW1_a	
5, 6	AIF1_bInB0_b ... AIF1_bInB15_b	AIF1_nInW2_a	AIF1_dnInD1_p
7, 8	AIF1_bInB16_b ... AIF1_bInB31_b	AIF1_nInW3_a	

Codes

Code		Possible settings				IMPORTANT	
No.	Designation	Lenze/ {Appl.}	Selection				
C0136						Control words Hexadecimal value is bit-coded. Read only	
1	CTRLWORD		0	{hex}	FFFF	Control word C0135	
2	CTRLWORD					CAN control word	
3	CTRLWORD					AIF control word	
C0855						Digital process data input words are indicated on the AIF interface (AIF1_IN) Hexadecimal value is bit-coded. Read only	📖 235
1	AIF1 IN bits		0000	{hex}	FFFF	Input word 2 (bit 0 ... 15)	
2	AIF1 IN bits					Input word 3 (bit 0 ... 15)	
C0856						Analog process data input words are indicated decimally on the AIF interface (AIF1_IN) 100.00% = 16384 Read only	📖 235
1	AIF1 IN words		-199.99	{0.01 %}	199.99	Input word 1	
2	AIF1 IN words					Input word 2	
3	AIF1 IN words					Input word 3	
C0857	AIF1 IN phi					32 bits of phase information on the AIF interface (AIF1_IN) Read only	📖 235
			-2147483648	{1}	2147483647		

13.2.2 Outputs_AIF1

This SB is used as an interface for output signals (e.g. setpoints/actual values) to attached fieldbus modules (e.g. INTERBUS, PROFIBUS-DP).

The process image is

- ► created in the cyclic task by means of a fixed set time interval of 10 ms.
- ► created in an interval task within the time set for this task.
- ► read at the beginning of the task and written at its end.

Please read the documentation for the connected fieldbus module.

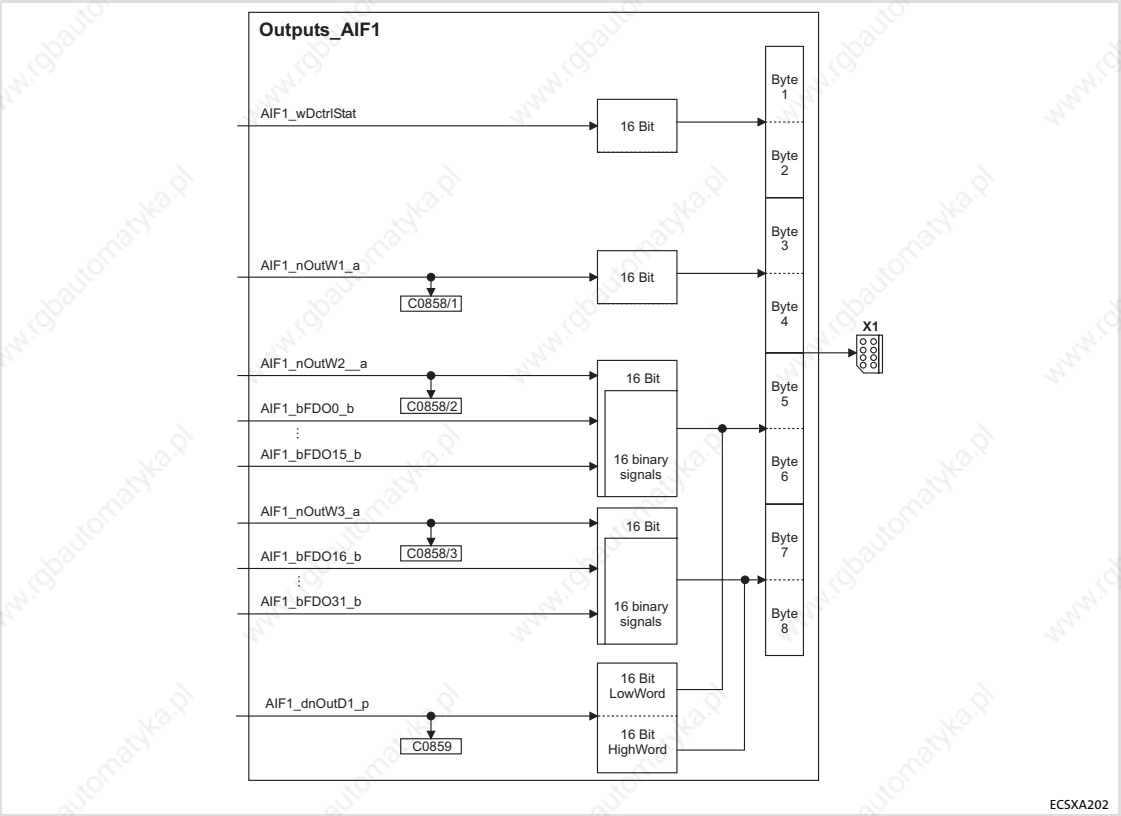

Fig. 13-4 System block "Outputs_AIF1"

System variables

Variable	Data type	Signal type	Address	Display code	Display format	Notes
AIF1_wDctrlStat	Word	–	%QW41.0	–	–	
AIF1_nOutW1_a	Integer	analog	%QW41.1	C0858/1	dec [%]	
AIF1_nOutW2_a			%QW41.2	C0858/2		
AIF1_nOutW3_a			%QW41.3	C0858/3		
AIF1_bFDO0_b ... AIF1_bFDO15_b	BOOL	binary	%QX41.2.0 ... %QX41.2.15	–	hex	
AIF1_bFDO16_b ... AIF1_bFDO31_b			%QX41.3.0 ... %QX41.3.15			
AIF1_dnOutD1_p	Double integer	position	%QD41.1	C0859	dec [inc]	

User data

The 8 bytes of user data to be sent can be written via several variables of different data types. According to requirements, data can therefore be transferred from the PLC program as

- ► binary information (1 bit)
- ► status word/quasi-analog value (16 bit)
- ► angle information (32 bit)

Note!

Avoid simultaneous overwriting via different variable types to ensure data consistency.

Thus, bytes 5 and 6 should only be overwritten by

- ► variable *AIF1_dnOutD1_p*,
- ► variable *AIF1_nOutW2_a* or
- ► variables *AIF1_bFDO0_b* ... *AIF1_bFDO15_b*.

Byte	Variable (1 bit)	Variable (16 bit)	Variable (32 bit)
1, 2		AIF1_wDctrlStat	
	Byte 1/2 can be used for transferring the status word from the SB **DCTRL_DriveControl** to the field bus module. ● For this purpose, connect variable *DCTRL_wStat* of the SB **DCTRL_DriveControl** to variable *AIF1_wDctrlStat*. ● In addition to signals such as IMP and CINH the SB status word **DCTRL_DriveControl** contains some freely assignable signals which can be overwritten via the variables *DCTRL_bStateB..._b* of the SB **DCTRL_DriveControl**.		
3, 4		AIF1_nOutW1_a	
5, 6	AIF1_bFDO0_b ... AIF1_bFDO15_b	AIF1_nOutW2_a	AIF1_dnOutD1_p
7, 8	AIF1_bFDO16_b ... AIF1_bFDO31_b	AIF1_nOutW3_a	

Codes

Code		Possible settings				IMPORTANT	
No.	Designation	Lenze/ {Appl.}	Selection				
C0858						Analog process data output words are indicated decimally on the AIF interface (AIF1_OUT) 100.00% = 16384 Read only	📖 240
1	AIF1 OUT words		-199.99	{0.01 %}	199.99	Output word 1	
2	AIF1 OUT words					Output word 2	
3	AIF1 OUT words					Output word 3	
C0859	AIF1 OUT phi					32-bit phase information at the AIF interface (AIF1_OUT) Only display	📖 240
			-2147483648	{1}	2147483647		

13.3 AIF2_IO_AutomationInterface (node number 42)

13.3.1 Inputs_AIF2

This SB is used as an interface for input signals (e.g. setpoints/actual values) to the attached fieldbus module (e.g. INTERBUS, PROFIBUS-DP).

The process image is

- created in the cyclic task by means of a fixed set time interval of 10 ms.
- created in an interval task within the time set for this task.
- read at the beginning of the task and written at its end.

Please read the documentation for the connected fieldbus module.

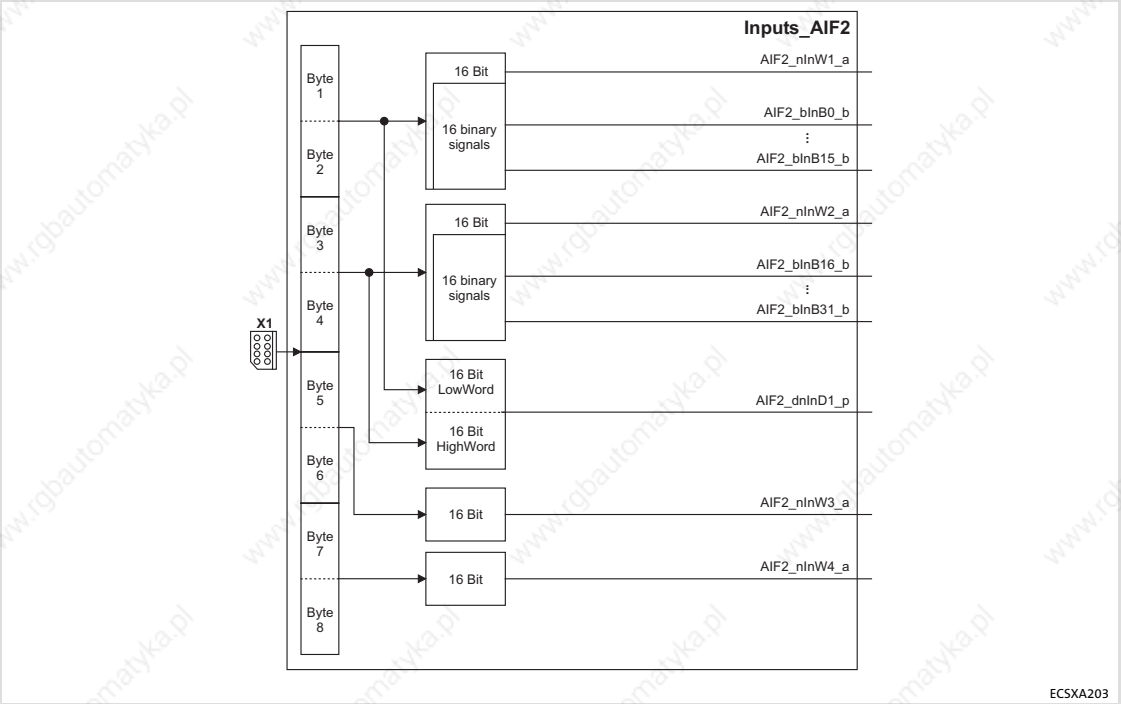

Fig. 13-5 System block "Inputs_AIF2"

System variables

Variable	Data type	Signal type	Address	Display code	Display format	Notes
AIF2_nInW1_a	Integer	analog	%IW42.0	–	–	
AIF2_nInW2_a			%IW42.1			
AIF2_nInW3_a			%IW42.2			
AIF2_nInW4_a			%IW42.3			
AIF2_bInB0_b ... AIF2_bInB15_b	Bool	binary	%IX42.0.0 ... %IX42.0.15	–	–	
AIF2_bInB16_b ... AIF2_bInB31_b			%IX42.1.0 ... %IX42.1.15			
AIF2_dnInD1_p	Double Integer	position	%ID42.0	–	–	

User data

The first 4 bytes from the 8 bytes of received user data are assigned to several variables of different data types. According to requirements, they thus can be evaluated by the PLC program as:

- ► binary information (1 bit)
- ► quasi-analog value (16 bit)
- ► angle information (32 bit)

Byte	Variable (1 bit)	Variable (16 bit)	Variable (32 bit)
1, 2	AIF2_bInB0_b ... AIF2_bInB15_b	AIF2_nInW1_a	AIF2_dnInD1_p
3, 4	AIF2_bInB16_b ... AIF2_bInB31_b	AIF2_nInW2_a	
5, 6		AIF2_nInW3_a	
7, 8		AIF2_nInW4_a	

13.3.2 Outputs_AIF2

This SB is used as an interface for output signals (e.g. setpoints/actual values) to attached fieldbus modules (e.g. INTERBUS, PROFIBUS-DP).

The process image is

- ► created in the cyclic task by means of a fixed set time interval of 10 ms.
- ► created in an interval task within the time set for this task.
- ► read at the beginning of the task and written at its end.

Please read the documentation for the connected fieldbus module.

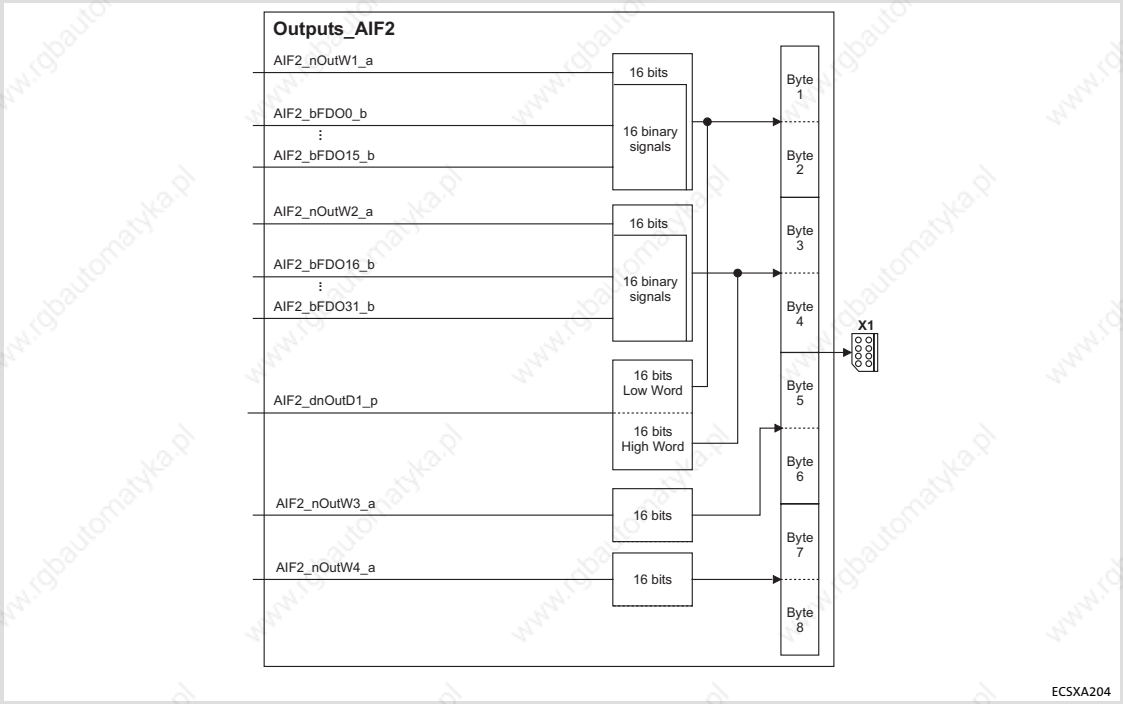

Fig. 13-6 System block "Outputs_AIF2"

System variables

Variable	Data type	Signal type	Address	Display code	Display format	Notes
AIF2_nOutW1_a	Integer	analog	%QW42.0	–	–	
AIF2_nOutW2_a			%QW42.1			
AIF2_nOutW3_a			%QW42.2			
AIF2_nOutW4_a			%QW42.3			
AIF2_bFDO0_b ... AIF2_bFDO15_b	Bool	binary	%QX42.0.0 ... %QX42.0.15	–	–	
AIF2_bFDO16_b ... AIF2_bFDO31_b			%QX42.1.0 ... %QX42.1.15			
AIF2_dnOutD1_p	Double Integer	position	%QD42.0	–	–	

User data

The first 4 bytes of the 8 bytes user data to be sent can be written via several variables of different data types. According to requirements, data can therefore be transferred from the PLC program as

- ► binary information (1 bit)
- ► status word/quasi-analog value (16 bit)
- ► angle information (32 bit)

Note!

Avoid simultaneous overwriting via different variable types to ensure data consistency.

Thus, bytes 1 and 2 should only be overwritten by

- ► variable *AIF2_dnOutD1_p*,
- ► variable *AIF2_nOutW1_a* or
- ► variables *AIF2_bFDO0_b* ... *AIF2_bFDO15_b*.

Byte	Variable (1 bit)	Variable (16 bit)	Variable (32 bit)
1, 2	AIF2_bFDO0_b ... AIF2_bFDO15_b	AIF2_nOutW1_a	AIF2_dnOutD1_p
3, 4	AIF2_bFDO16_b ... AIF2_bFDO31_b	AIF2_nOutW2_a	
5, 6		AIF2_nOutW3_a	
7, 8		AIF2_nOutW4_a	

13.4 AIF3_IO_AutomationInterface (node number 43)

13.4.1 Inputs_AIF3

This SB is used as an interface for input signals (e.g. setpoints/actual values) to the attached fieldbus module (e.g. INTERBUS, PROFIBUS-DP).

The process image is

- created in the cyclic task by means of a fixed set time interval of 10 ms.
- created in an interval task within the time set for this task.
- read at the beginning of the task and written at its end.

Please read the documentation for the connected fieldbus module.

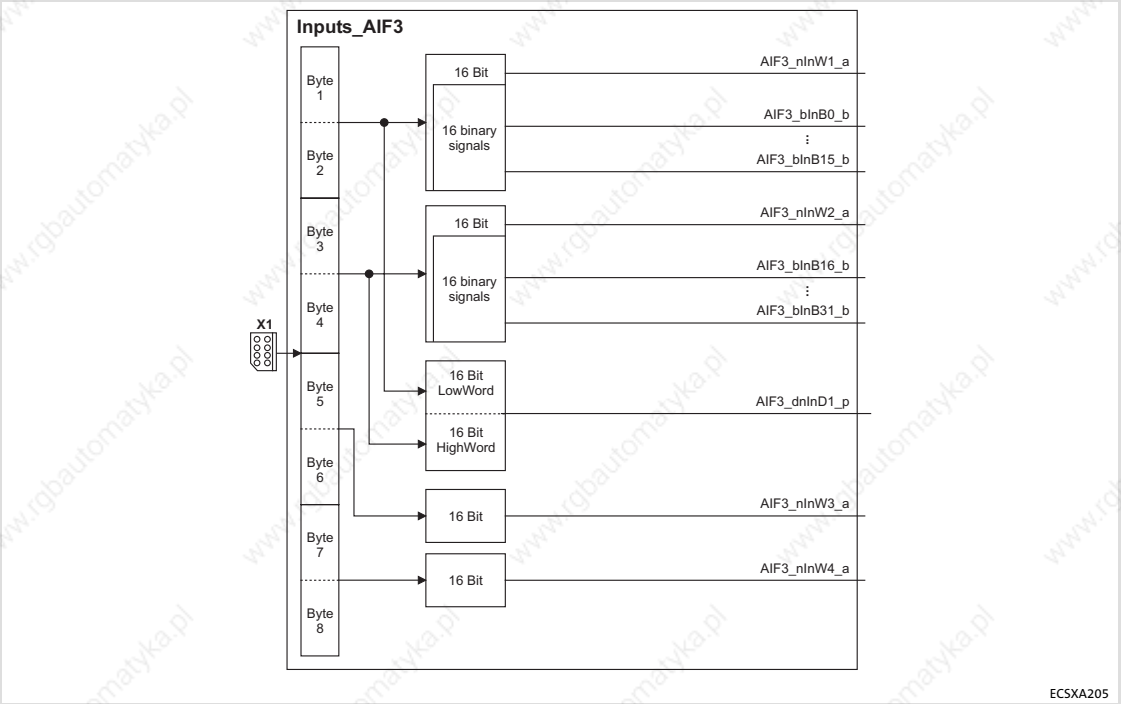

Fig. 13-7 System block "Inputs_AIF3"

System variables

Variable	Data type	Signal type	Address	Display code	Display format	Notes
AIF3_nInW1_a	Integer	analog	%IW43.0	–	–	
AIF3_nInW2_a			%IW43.1			
AIF3_nInW3_a			%IW43.2			
AIF3_nInW4_a			%IW43.3			
AIF3_bInB0_b ... AIF3_bInB15_b	Bool	binary	%IX43.0.0 ... %IX43.0.15	–	–	
AIF3_bInB16_b ... AIF3_bInB31_b			%IX43.1.0 ... %IX43.1.15			
AIF3_dnInD1_p	Double Integer	position	%ID43.0	–	–	

User data

The first 4 bytes from the 8 bytes of received user data are assigned to several variables of different data types. According to requirements, they thus can be evaluated by the PLC program as:

- ► binary information (1 bit)
- ► quasi-analog value (16 bit)
- ► angle information (32 bit)

Byte	Variable (1 bit)	Variable (16 bit)	Variable (32 bit)
1, 2	AIF3_bInB0_b ... AIF3_bInB15_b	AIF3_nInW1_a	AIF3_dnInD1_p
3, 4	AIF3_bInB16_b ... AIF3_bInB31_b	AIF3_nInW2_a	
5, 6		AIF3_nInW3_a	
7, 8		AIF3_nInW4_a	

13.4.2 Outputs_AIF3

This SB is used as an interface for output signals (e.g. setpoints/actual values) to attached fieldbus modules (e.g. INTERBUS, PROFIBUS-DP).

The process image is

- ► created in the cyclic task by means of a fixed set time interval of 10 ms.
- ► created in an interval task within the time set for this task.
- ► read at the beginning of the task and written at its end.

Please read the documentation for the connected fieldbus module.

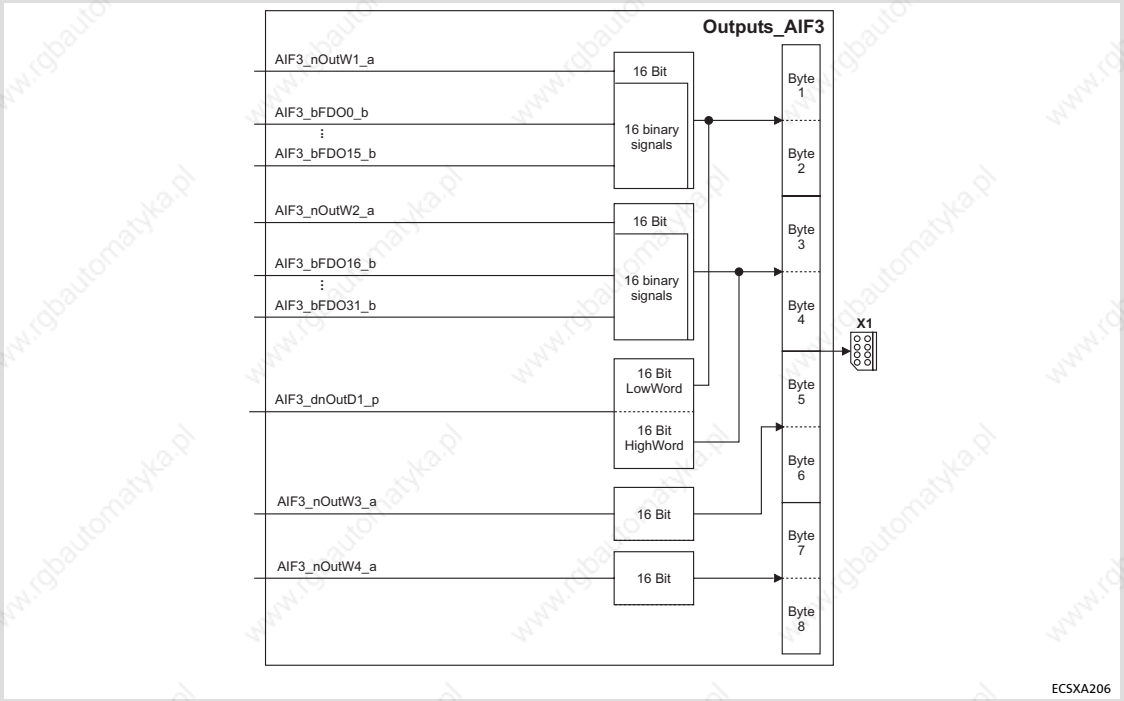

Fig. 13-8 System block "Outputs_AIF3"

System variables

Variable	Data type	Signal type	Address	Display code	Display format	Notes
AIF3_nOutW1_a	Integer	analog	%QW43.0	–	–	
AIF3_nOutW2_a			%QW43.1			
AIF3_nOutW3_a			%QW43.2			
AIF3_nOutW4_a			%QW43.3			
AIF3_bFDO0_b ... AIF3_bFDO15_b	BOOL	binary	%QX43.0.0 ... %QX43.0.15	–	–	
AIF3_bFDO16_b ... AIF3_bFDO31_b			%QX43.1.0 ... %QX43.1.15			
AIF3_dnOutD1_p	Double integer	position	%QD43.0	–	–	

User data

The first 4 bytes of the 8 bytes user data to be sent can be written via several variables of different data types. According to requirements, data can therefore be transferred from the PLC program as

- ► binary information (1 bit)
- ► status word/quasi-analog value (16 bit)
- ► angle information (32 bit)

Note!

Avoid simultaneous overwriting via different variable types to ensure data consistency.

Thus, bytes 1 and 2 should only be overwritten by

- ► variable *AIF3_dnOutD1_p*,
- ► variable *AIF3_nOutW1_a* or
- ► variables *AIF3_bFDO0_b* ... *AIF3_bFDO15_b*.

Byte	Variable (1 bit)	Variable (16 bit)	Variable (32 bit)
1, 2	AIF3_bFDO0_b ... AIF3_bFDO15_b	AIF3_nOutW1_a	AIF3_dnOutD1_p
3, 4	AIF3_bFDO16_b ... AIF3_bFDO31_b	AIF3_nOutW2_a	
5, 6		AIF3_nOutW3_a	
7, 8		AIF3_nOutW4_a	

13.5 ANALOG1_IO (node number 11)

13.5.1 Inputs_ANALOG1 (analog input)

This SB represents the interface for analog differential signals via terminal X6/AI+, AI- as a setpoint input or an actual value input.

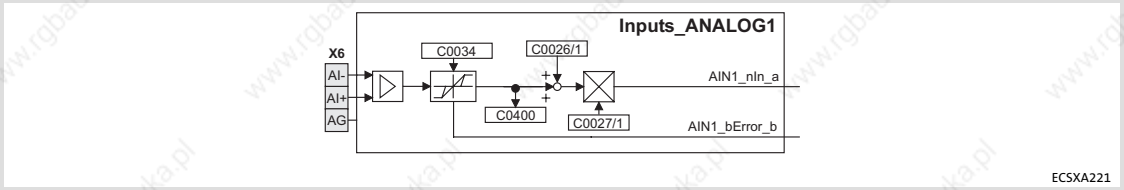

Fig. 13-9 System block "Inputs_ANALOG1"

Analog input configuration

► Set via C0034 whether the input is to be used for a master voltage or a master current.

► Set jumper bar X3 according to setting in C0034:

Stop!
Do not plug the jumper on 3-4! The axis module cannot be initialised like this.

Jumper bar X3	Setting	Measuring range
5 6 3 4 1 2	5-6 open Jumper on 1-2: Parking position	**C0034 = 0** ● Level: -10 ... +10 V ● Resolution: 5 mV (11 Bit + sign) ● Scaling: ±10 V ≡±16384 ≡±100%
5 6 3 4 1 2	5-6 closed	**C0034 = 1** ● Level: +4 ... +20 mA ● Resolution: 20 µA (10 bits without sign) ● Scaling: +4 mA ≡ 0 ≡ 0 % +20 mA ≡ 16384 ≡ 100 %
		C0034 = 2 ● Level: -20 ... +20 mA ● Resolution: 20 µA (10 bits + sign) ● Scaling: ±20 mA ≡±16384 ≡±100%

Use as master current input

► Master current < 2 mA:
– Variable *AIN1_bError_b* = TRUE
– An error handling can be set via C0598.

► Master current >= 2 mA:
– Variable *AIN1_bError_b* = FALSE

System variables

Variable	Data type	Signal type	Address	Display code	Display format	Comments
AIN1_nIn_a	integer	analog	%IW11.0	C0400	dec [%]	Analog input 1
AIN1_bError_b	BOOL	binary	%IX11.1.0	–	–	Only when C0034 = 1: TRUE, if |I| < 2 mA

Codes

Code		Possible settings				IMPORTANT	
No.	Designation	Lenze/ {Appl.}	Selection				
C0026						Used for relative analog signals	📖 251 📖 325
1	FCODE (offset)	0.0	-199.99	{0.01 %}	199.99		
2	FCODE (offset)	0.0					
C0027						Used for relative analog signals	📖 251 📖 325
1	FCODE (gain)	100.0	-199.99	{0.01 %}	199.99		
2	FCODE (gain)	100.0					
C0034	Mst current	0				Selection: master voltage/master current on analog input (AIN1_nIn_a)	📖 251
			0	-10 ... + 10 V		Master voltage	
			1	+4 ... +20 mA		Master current	
			2	-20 ... +20 mA			
C0400	DIS: AnalogIn					Signal at the analog input Read only	
			-199.99	{0.01 %}	199.99		
C0598	MONIT SD5	3				Configuration of master current monitoring at X6 < 2 mA ”MastISourceDef”	📖 251
			0	TRIP			
			2	Warning			
			3	Off			

13.6 CAN_Management (node number 101)

This SB serves to

- activate a **reset node** to e.g. accept changes in the baud rate and addressing.
- process **Communication Error**, **Bus Off State** and other states in the PLC program.
- influence the instant of transmission of CAN2_Out and CAN3_Out.

In addition, the system bus communication can be monitored.

Note!

- The process image for this SB is created in the course of a fixed system task (interval: 1 ms).
- Even if this SB has not been assigned to the control configuration, a reset node can be carried out via C0358.

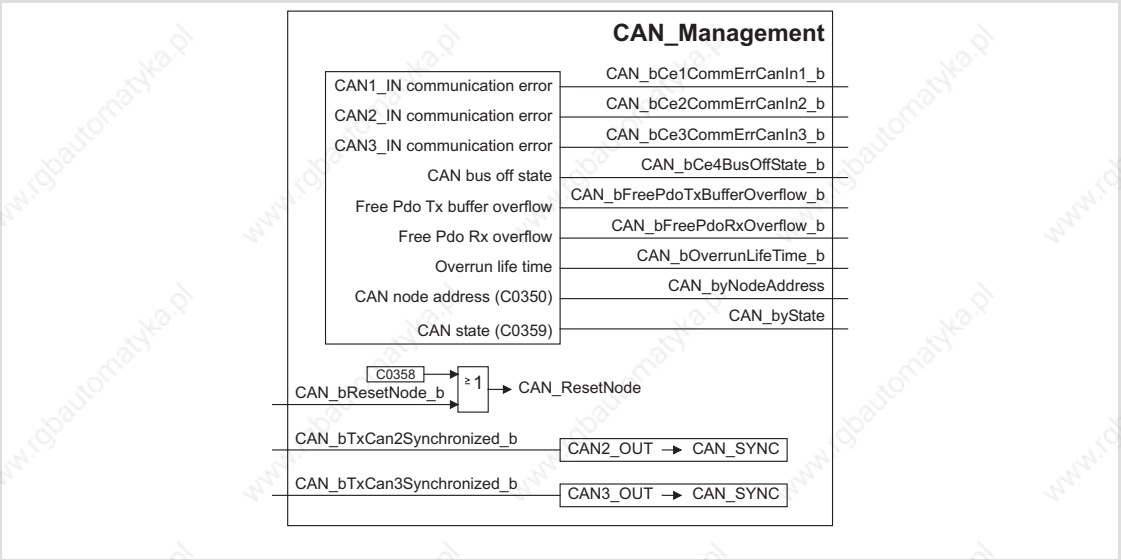

Fig. 13-10 System block "CAN_Management"

13.6.1 Inputs_CAN_Management

System variables

Variable	Data type	Signal type	Address	Display code	Display format	Comments
CAN_bCe1CommErrCanIn1_b	BOOL	binary	%IX101.0.0	–	–	CAN1_IN communication error
CAN_bCe2CommErrCanIn1_b			%IX101.0.1			CAN2_IN communication error
CAN_bCe3CommErrCanIn1_b			%IX101.0.2			CAN3_IN communication error
CAN_bCe4BusOffState_b			%IX101.0.3			CAN bus ”Off State” detected (CAN bus interface X4)
CAN_bFreePdoTxBufferOverflow_b			%IX101.0.4			Overflow of transmit request memory
CAN_bFreePdoRxOverflow_b			%IX101.0.5			Overflow of receipt memory
CAN_bOverrunLifeTime_b			%IX101.0.6			”Node Life Time” exceeded
CAN_byNodeAddress	Byte	–	%IB101.2	C0350	–	Node address (CAN bus interface X4)
CAN_byState			%IB101.3	C0359	–	CAN bus status (CAN bus interface X4)

13.6.2 Outputs_CAN_Management

System variables

Variable	Data type	Signal type	Address	Display code	Display format	Comments
CAN_bResetNode_b	BOOL	binary	%QX101.0.0	–	–	Carry out reset node (CAN bus interface X4)
CAN_bTxCan2Synchronized_b			%QX101.0.1			Transmit CAN2_OUT with Sync telegram.
CAN_bTxCan3Synchronized_b			%QX101.0.2			Transmit CAN3_OUT with sync telegram.

13.6.3 Executing a reset node

The following changes will only be valid after a reset node:

- Changes of the CAN node addresses and baud rates (📖 161)
- Changes of the addresses of process data objects (COB-IDs)
  - General addressing (📖 426)
  - Individual addressing (📖 164)
- Change of the master/slave boot up configuration (📖 167)

Reset node can be activated by:

- switching on the low-voltage supply
- the bus system (via the network management (NMT))
- C0358 = 1 using the XTkeypad
- *CAN_bResetNode_b* = TRUE

Note!
If reset node is executed via GDC, communication will be interrupted. You therefore have to log in again manually or find the devices connected to the bus once again.

13.6.4 Define instant of transmission for CAN2_OUT/CAN3_OUT

Via *CAN_bTxCan2Synchonized_b* and *CAN_bTxCan3Synchonized_b* the instant of transmission for the CAN objects CAN2_OUT and CAN3_OUT is determined:

- **FALSE**: data from CAN2_OUT/CAN3_OUT is sent at the end of the process image.
- **TRUE**: data from CAN2_OUT/CAN3_OUT is sent after the CAN bus synchronisation.
  - The identifiers for sync transmission and reception telegrams can be set via C0367/C0368.
  - The *sync Tx time* can be set via C0369.

Note!
Detailed information concerning the CAN bus synchronisation: 📖 257

13.6.5 Status messages

The SB **CAN_Management** provides different status messages which can be processed in the PLC program:

Identifiers	Information	
CAN_bCe1CommErrCanIn1_b	TRUE	CAN1_IN communication error
CAN_bCe2CommErrCanIn1_b	TRUE	CAN2_IN communication error
CAN_bCe3CommErrCanIn1_b	TRUE	CAN3_IN communication error
CAN_bCe4BusOffState_b	TRUE	CAN bus ”Off State” detected (CAN bus interface X4)
CAN_bFreePdoTxBufferOverflow_b	Free CAN objects	
	TRUE	Overflow of the transmit request memory
CAN_bFreePdoRxOverflow_b	Free CAN objects	
	TRUE	Overflow of the receipt memory
CAN_bOverrunLifeTime_b	CAN monitoring mechanism ”Node Guarding”	
	TRUE	”Life Guarding Event”: The controller configured as CAN slave does not receive a ”Node Guarding” telegram with the ”Node Life Time” from the CAN master.
CAN_byNodeAddress	1 ... 63	Node address (CAN bus interface X4)
CAN_byState	CAN bus operating status (CAN bus interface X4)	
	1	Operational
	2	Pre-Operational
	3	Warning
	4	Bus off

13.7 CAN_Synchronization (node number 102)

This SB serves to synchronise the internal time base of the controller with the instant of reception of the sync telegram or a terminal signal. Thereby the start of cyclic and time-controlled internal processes of all controllers involved in the synchronisation (e.g. data transfer from tasks to the DCTRL function block) is effected synchronously.

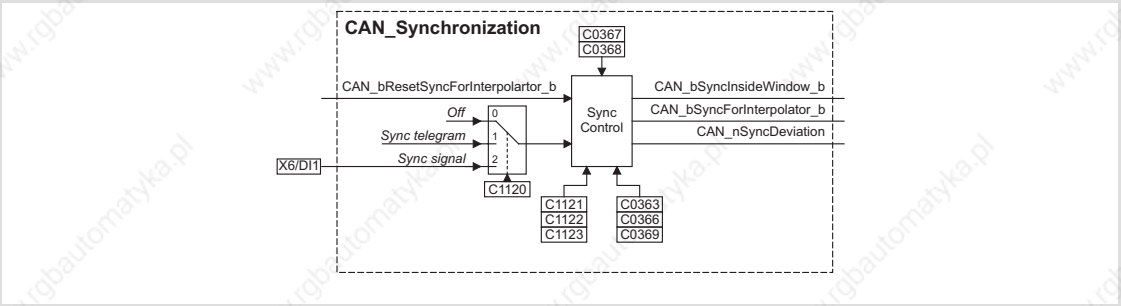

Fig. 13-11 System block "CAN_Synchronization"

System variables

Variable	Data type	Signal type	Address	Display code	Display format	Comments
CAN_bSyncInsideWindow_b	BOOL	binary	%IX102.0.0	–	–	TRUE: Sync telegram/signal within the time slot (C1123) FALSE: ● Quit synchronicity ● no sync telegram/signal ● Time slot (C1123) too small
CAN_bSyncForInterpolator_b	BOOL	binary	%IX102.0.1	–	–	TRUE: Sync telegram/signal detected
CAN_nSyncDeviation	integer		%IX102.1	–	–	current sync deviation
CAN_bResetSyncForInterpolator_b	BOOL	binary	%QX102.0.0	–	–	TRUE: Reset CAN_bSyncForInterpolator_b

Operating mode

The operating mode (sync signal source) is set via C1120.

Note!

When synchronising via terminal, ensure that in addition to the SB **CAN_Synchronization** the SB **DIGITAL_IO** must also be integrated in the control configuration of the "Drive PLC Developer Studio" (DDS).

Code		Possible settings			IMPORTANT	
No.	Designation	Lenze/ {Appl.}	Selection			
C1120	Sync mode	0			Sync signal source	📖 257
			0	Off	Off	
			1	CAN sync	Sync connection via CAN bus	📖 261
			2	Terminal sync	Sync connection via terminal X6/DI1	📖 262

Synchronisation time

The synchronisation process requires an additional period of time after the mains connection and the initialisation phase.

The synchronisation time depends on

- ► the baud rate of the CAN bus,
- ► the starting time (arrival of the first sync signal),
- ► the time interval between the sync signals,
- ► the sync correction factor (C0363),
- ► the operating mode (C1120).

The synchronisation time can be set via the code C0369.

Code		Possible settings				IMPORTANT	
No.	Designation	Lenze/ {Appl.}	Selection				
C0369	SyNc Tx time	0				CAN sync transmission cycle for CAN bus interface X4 A sync telegram with the identifier of C0368 is sent with the cycle time set. **ECSxP:** The setting is effected automatically depending on C4062!	📖 258
			0	{1 ms}	65000	0 = switched off	

Synchronisation cycle

For the purpose of synchronisation the master sends a periodic sync signal.

The controllers receive the sync signal and compare the time between two LOW-HIGH edges of the signal with the preselected cycle time (C1121).

Code		Possible settings				IMPORTANT	
No.	Designation	Lenze/ {Appl.}	Selection				
C1121	Sync cycle	2				Synchronisation cycle	📖 258
			1	{1 ms}	13		

CAN sync identifier

Code		Possible settings				IMPORTANT	
No.	Designation	Lenze/ {Appl.}	Selection				
C0367	Sync Rx ID	128				CAN sync receipt ID for CAN bus interface X4	📖 259
			1	{1}	256		

Phase shift

The synchronisation phase (C1122) defines the period of time of the offset by which the start of the controller-internal cycle lags behind the sync signal received.

Note!

Always set the synchronisation phase greater than the maximum possible temporal jitter* of the sync signals received!

* Jitters are phase shiftings and hence periodic changes of signal frequencies. They are shiftings of fixed instants of a digital signal (e.g. the transition instant from one signal amplitude to another). Jitters especially occur at high frequencies and may cause data losses.

Code		Possible settings				IMPORTANT	
No.	Designation	Lenze/ {Appl.}	Selection				
C1122	Sync phase	0.460				Synchronisation phase	📖 259
			0.000	{0.001 ms}	6.500		

Correction value of phase controller

The CAN sync correction increment (C0363) indicates the increment used to extend or shorten the control cycle (e.g. to shift the start time).

Code		Possible settings			IMPORTANT	
No.	Designation	Lenze/ {Appl.}	Selection			
C0363	Sync correct.	1			CAN sync correction increment	📖 259
			1	0.2 µs/ms		
			2	0.4 µs/ms		
			3	0.6 µs/ms		
			4	0.8 µs/ms		
			5	1.0 µs/ms		

Monitoring of the synchronisation (time slot)

The variable *CAN_bSyncInsideWindow_b* can be used to monitor the synchronisation.

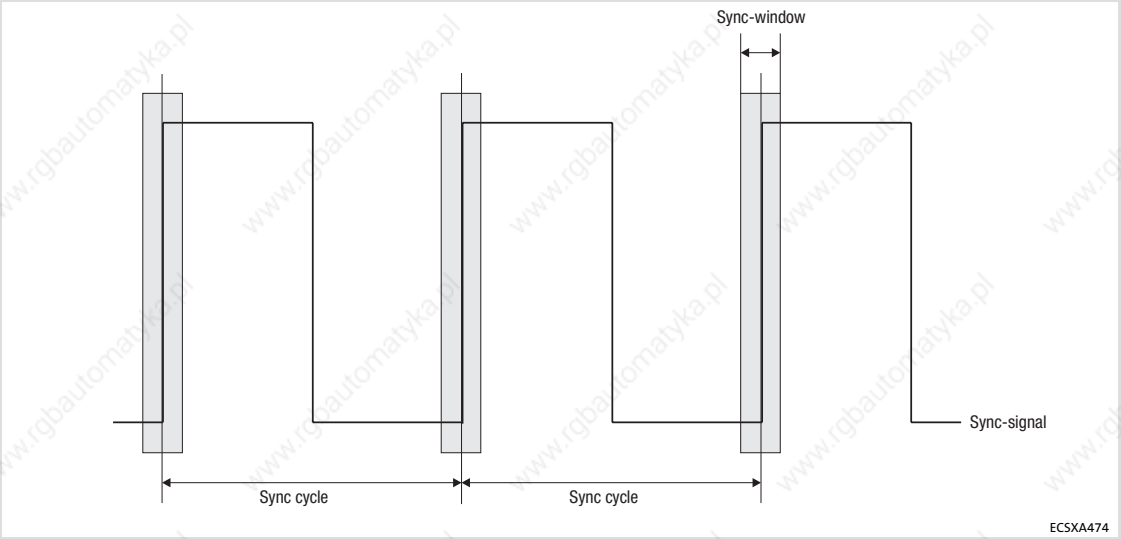

Fig. 13-12 ”Time slot” for the LOW-HIGH edges of the sync signal

Note!

A jitter (📖 259) up to ±200 µs on the LOW-HIGH edges of the sync signal is permissible. The amount of the jitter has an impact on the parameterisation of the ”time slot”.

Code		Possible settings				IMPORTANT	
No.	Designation	Lenze/ {Appl.}	Selection				
C1123	Sync window	0.010				Synchronisation window	📖 260
			0.000	{0.001 ms}	6.500		

CAN sync response

Code		Possible settings			IMPORTANT	
No.	Designation	Lenze/ {Appl.}	Selection			
C0366	Sync Response	1			CAN sync response for CAN bus interface X4	📖 260
			0	No response		
			1	Response		

13.7.1 Axis synchronisation via CAN bus interface

The CAN bus transmits the sync signal and the process signals.

Application examples:

► Selection of cyclic, synchronised position setpoint information for multi-axis applications via the CAN bus

Observe the following sequence in the commissioning phase:

Device	Step		Description
All devices	1.	Commission the controller and the CAN bus.	
	2.	Inhibit the controller. ● Press key <F9> in the GDC.	📖 120
Slaves	3.	Connect ”CANSync-InsideWindow” with digital output.	
	4.	C1120 = 1	Active synchronisation by sync telegram via CAN bus.
	5.	C0366 = 1 (Lenze setting)	CAN sync reaction: ● Slaves respond to sync telegram.
Master	6.	Define the telegram (identifier) sequence: A . Send new setpoint to all slaves. B Send sync telegram. C Receive response of all slaves.	
	7.	Start communication/send sync telegrams.	
Slaves	8.	Read C0362 of the master.	Retrieve cycle time of the sync telegram from the master.
	9.	Set C1121 according to C0362 of the master.	Adjust the time distance of the sync telegrams to be received to the cycle time of the master.
	10.	Set C1123.	Set optimum size for the ”time slot”. ● If the sync signal ”jitters” heavily (📖 259), increase ”time slot”.
Slaves	11.	Enable the controller via the signal ”CANSync-InsideWindow” applied to the digital output.	Monitoring of the synchronisation: ● If ”CANSync-InsideWindow” = TRUE, enable the controller.

13.7.2 Axis synchronisation via terminal X6/DI1

The transmission paths for the sync signal and the process signals are separated.

- ► The process signals are connected via a freely selectable input channel (e.g. AIF interface, digital frequency input).
- ► The sync signal is injected via the digital input X6/DI1.

Application examples:

- ► Entry of cyclic, synchronised position setpoint information for multi-axis applications via other bus systems (e.g. INTERBUS).
- ► Synchronisation of the internal processing cycles to superimposed process controls.

Note!

When synchronising via terminal, ensure that in addition to the SB **CAN_Synchronization** the SB **DIGITAL_IO** must also be integrated in the control configuration of the ”Drive PLC Developer Studio” (DDS).

Please observe the following sequence for commissioning:

Site	Step		Description
All devices	1.	Commission the controller and the CAN bus.	
	2.	Inhibit the controller. ● Press the <F9> key in GDC.	📖 120
Slaves	3.	Connect ”CANSync-InsideWindow” with digital output.	
	4.	Connect the sync signal of the master to terminal X6/DI1.	
Slaves	5.	C1120 = 2	Synchronisation through sync signal via terminal X6/DI1 (DigIn_bIn1_b) is active.
Slaves	6.	C0366 = 1 (Lenze setting)	CAN sync reaction: ● Slaves respond to sync telegram.
Master	7.	Start communication/send sync signals.	
Slaves	8.	Read C0362 of the master.	Retrieve cycle time of the sync signal from the master.
	9.	Set C1121 according to C0362 of the master.	Adjust the time distance of the sync signal to be received to the cycle time of the master.
	10.	Set C1123.	Set optimum size for the ”time slot”. ● If the sync signal ”jitters” heavily (📖 259), increase ”time slot”.
	11.	Enable the controller via the signal ”CANSync-InsideWindow” applied to the digital output.	Synchronisation monitoring: ● If ”CANSync-InsideWindow” = TRUE, enable the controller.

13.8 CAN1_IO (node number 31)

This SB serves to transmit cyclic process data via the CAN bus interface X4.

A sync telegram which must be generated from **another** node is required for transmission.

- ► The transmission mode (event or time-controlled) is set via C0356.
- ► The monitoring time is set via C0357 (Lenze setting: 3000 ms).

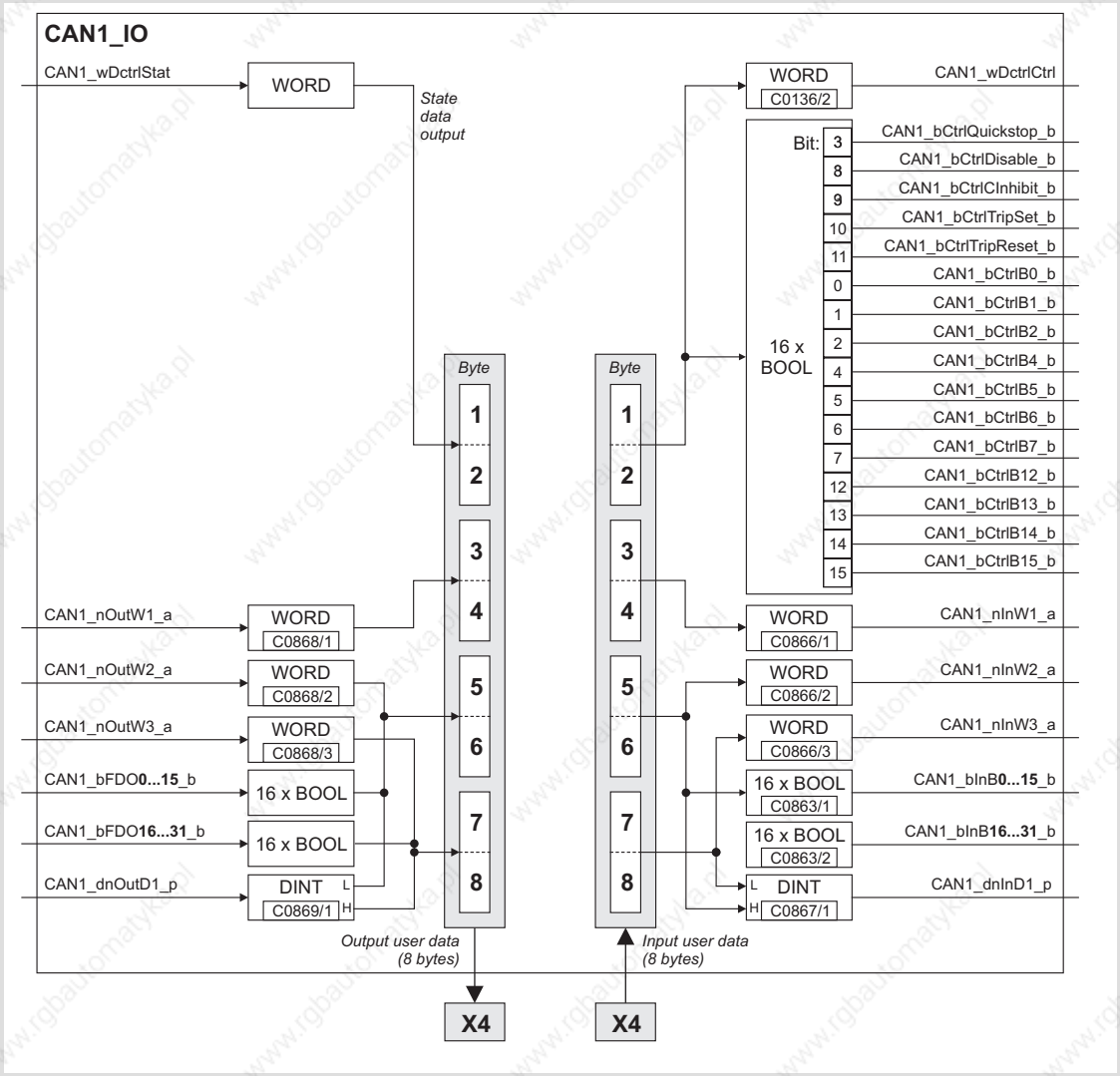

Fig. 13-13 System block "CAN1_IO"

Process data telegram

The process data telegram consists of an *identifier* and eight bytes of user data.

Identifier	8 bytes of user data							
11 bits	Byte 1	Byte 2	Byte 3	Byte 4	Byte 5	Byte 6	Byte 7	Byte 8

Codes

Code		Possible settings				IMPORTANT	
No.	Designation	Lenze/ {Appl.}	Selection				
C0136						Control words Hexadecimal value is bit-coded. Read only	
1	CTRLWORD		0	{hex}	FFFF	Control word C0135	
2	CTRLWORD					CAN control word	
3	CTRLWORD					AIF control word	
C0356						CAN time settings for CAN bus interface X4	📖 168
1	CAN times	3000	0	{1 ms}	65000	CAN boot-up time: Delay time after mains connection for initialisation by the master.	
2	CAN times	0				CAN2_OUT/CAN3_OUT cycle times: Factor for the task time to send process data telegram. 0 = Event-controlled transmission	
3	CAN times	0					
4	CAN times	20				CAN2_OUT/CAN3_OUT delay time When the NMT state ”Operational” has been reached (after ”Pre-operational”), the delay time ”CANdelay” is started. After the delay time has expired, the PDOs CAN2_OUT and CAN3_OUT are sent for the first time.	
C0357						Monitoring time for CAN1...3_IN (CAN bus interface X4)	📖 191
1	CE monit time	3000	1	{1 ms}	65000	CE1 monitoring time	
2	CE monit time	3000				CE2 monitoring time	
3	CE monit time	3000				CE3 monitoring time	
C0863						Digital process data input words for CAN bus interface X4 Hexadecimal value is bit-coded. Read only	📖 415
			0000	{hex}	FFFF		
1	CAN IN bits		Bit 0	...	Bit15	CAN1_IN: Process data input word 1	
2	CAN IN bits		Bit 16	...	Bit 31	CAN1_IN: Process data input word 2	
3	CAN IN bits		Bit 0	...	Bit15	CAN2_IN: Process data input word 1	
4	CAN IN bits		Bit 16	...	Bit 31	CAN2_IN: Process data input word 2	
5	CAN IN bits		Bit 0	...	Bit15	CAN3_IN: Process data input word 1	
6	CAN IN bits		Bit 16	...	Bit 31	CAN3_IN: Process data input word 2	

Code		Possible settings				IMPORTANT	
No.	Designation	Lenze/ {Appl.}	Selection				
C0866						Analog process data input words (decimal) for CAN bus interface X4 100.00% = 16384 Read only	415
1	CAN IN words		-199.99	{0.01 %}	199.99	CAN1_IN word 1	
2	CAN IN words					CAN1_IN word 2	
3	CAN IN words					CAN1_IN word 3	
4	CAN IN words					CAN2_IN word 1	
5	CAN IN words					CAN2_IN word 2	
6	CAN IN words					CAN2_IN word 3	
7	CAN IN words					CAN2_IN word 4	
8	CAN IN words					CAN3_IN word 1	
9	CAN IN words					CAN3_IN word 2	
10	CAN IN words					CAN3_IN word 3	
11	CAN IN words					CAN3_IN word 4	
C0867						32-bit phase information for CAN bus interface X4 Read only	
1	CAN IN phi		-2147483648	{1}	2147483647	CAN1_IN	
2	CAN IN phi					CAN2_IN	
3	CAN IN phi					CAN3_IN	
C0868	DIS:OUTx.Wx					Analog process data output words (decimal) for CAN bus interface X4 100.00% = 16384 Read only	
1	CAN OUT words		-32768	{1 %}	32768	CAN1_OUT word 1	
2	CAN OUT words					CAN1_OUT word 2	
3	CAN OUT words					CAN1_OUT word 3	
4	CAN OUT words					CAN2_OUT word 1	
5	CAN OUT words					CAN2_OUT word 2	
6	CAN OUT words					CAN2_OUT word 3	
7	CAN OUT words					CAN2_OUT word 4	
8	CAN OUT words					CAN3_OUT word 1	
9	CAN OUT words					CAN3_OUT word 2	
10	CAN OUT words					CAN3_OUT word 3	
11	CAN OUT words					CAN3_OUT word 4	

Code		Possible settings				IMPORTANT
No.	Designation	Lenze/ {Appl.}	Selection			
C0869						32-bit phase information for CAN bus interface X4 Read only
1	CAN OUT phi		-2147483648	{1}	2147483647	CAN1_OUT
2	CAN OUT phi					CAN2_OUT
3	CAN OUT phi					CAN3_OUT

13.8.1 Inputs_CAN1

System variables

Variable	Data type	Signal type	Address	Display code	Display format	Comments
CAN1_wDctrlCtrl	Integer	analog	%IW31.0	C0136/2	dec [%]	
CAN1_bInB0_b ... CAN1_bInB15_b	Bool	binary	%IX31.2.0 ... %IX31.2.15	C0863/1	hex	Display code for binary signals of CAN1_nInW1_a
CAN1_nInW1_a	Integer	analog	%IW31.1	C0866/1	dec [%]	
CAN1_bInB16_b ... CAN1_bInB31_b	Bool	binary	%IX31.3.0 ... %IX31.3.15	C0863/2	hex	Display code for binary signals of CAN1_nInW2_a
CAN1_nInW2_a	Integer	analog	%IW31.2	C0866/2	dec [%]	
CAN1_nInW3_a	Integer	analog	%IW31.3	C0866/3	dec [%]	
CAN1_dnInD1_p	Double integer	position	%ID31.1	C0867/1	dec [inc]	

User data

The 8 bytes of received user data are assigned to several variables of different data types. According to requirements, they can thus be evaluated by the PLC program as:

- ► binary information (1 bit)
- ► control word/quasi-analog value (16 bit)
- ► angle information (32 bit)

Byte	Variable (1 bit)	Variable (16 bit)	Variable (32 bit)
1, 2	CAN1_bCtrlB0_b CAN1_bCtrlB1_b CAN1_bCtrlB2_b CAN1_bCtrlQuickstop_b CAN1_bCtrlB4_b CAN1_bCtrlB5_b CAN1_bCtrlB6_b CAN1_bCtrlB7_b CAN1_bCtrlDisable_b CAN1_bCtrlCInhibit_b CAN1_bCtrlTripSet_b CAN1_bCtrlTripReset_b CAN1_bCtrlB12_b CAN1_bCtrlB13_b CAN1_bCtrlB14_b CAN1_bCtrlB15_b	CAN1_wDctrlCtrl	
3, 4		CAN1_nInW1_a	
5, 6	CAN1_bInB0_b ... CAN1_bInB15_b	CAN1_nInW2_a	CAN1_dnInD1_p
7, 8	CAN1_bInB16_b ... CAN1_bInB31_b	CAN1_nInW3_a	

13.8.2 Outputs_CAN1

System variables

Variable	Data type	Signal type	Address	Display code	Display format	Comments
CAN1_wDctrlStat	Integer	analog	%QW31.0	–	–	
CAN1_bFDO0_b ... CAN1_bFDO15_b	Bool	binary	%QX31.2.0 ... %QX31.2.15	–	hex	
CAN1_nOutW1_a	Integer	analog	%QW31.1	C0868/1	dec [%]	
CAN1_bFDO16_b ... CAN1_bFDO31_b	Bool	binary	%QX31.3.0 ... %QX31.3.15	–	hex	
CAN1_nOutW2_a	Integer	analog	%QW31.2	C0868/2	dec [%]	
CAN1_nOutW3_a	Integer	analog	%QW31.3	C0868/3	dec [%]	
CAN1_dnOutD1_p	Double integer	position	%QD31.1	C0869/1	dec [inc]	

User data

The 8 bytes of user data to be sent can be written via several variables of different data types. According to requirements, data can therefore be transferred from the PLC program as

- binary information (1 bit)
- status word/quasi-analog value (16 bit)
- angle information (32 bit)

Byte	Variable (1 bit)	Variable (16 bit)	Variable (32 bit)
1, 2		CAN1_wDctrlStat	
3, 4		CAN1_nOutW1_a	
5, 6	CAN1_bFDO0_b ... CAN1_bFDO15_b	CAN1_nOutW2_a	CAN1_dnOutD1_p
7, 8	CAN1_bFDO16_b ... CAN1_bFDO31_b	CAN1_nOutW3_a	

Note!

Avoid simultaneous overwriting via different variable types to ensure data consistency.

E.g., for overwriting bytes 5 and 6, either only use the variable *CAN1_dnOutD1_p*, only the variable *CAN1_nOutW2_a* or only the variables *CAN1_bFDO0_b ... CAN1_bFDO15_b*!

13.9 CAN2_IO (node number 32)

This SB serves to transmit event or time-controlled process data via the CAN bus interface X14.

A sync telegram is not required.

► The transmission mode (event or time-controlled) is set via C0356.

► The monitoring time is set via C0357 (Lenze setting: 3000 ms).

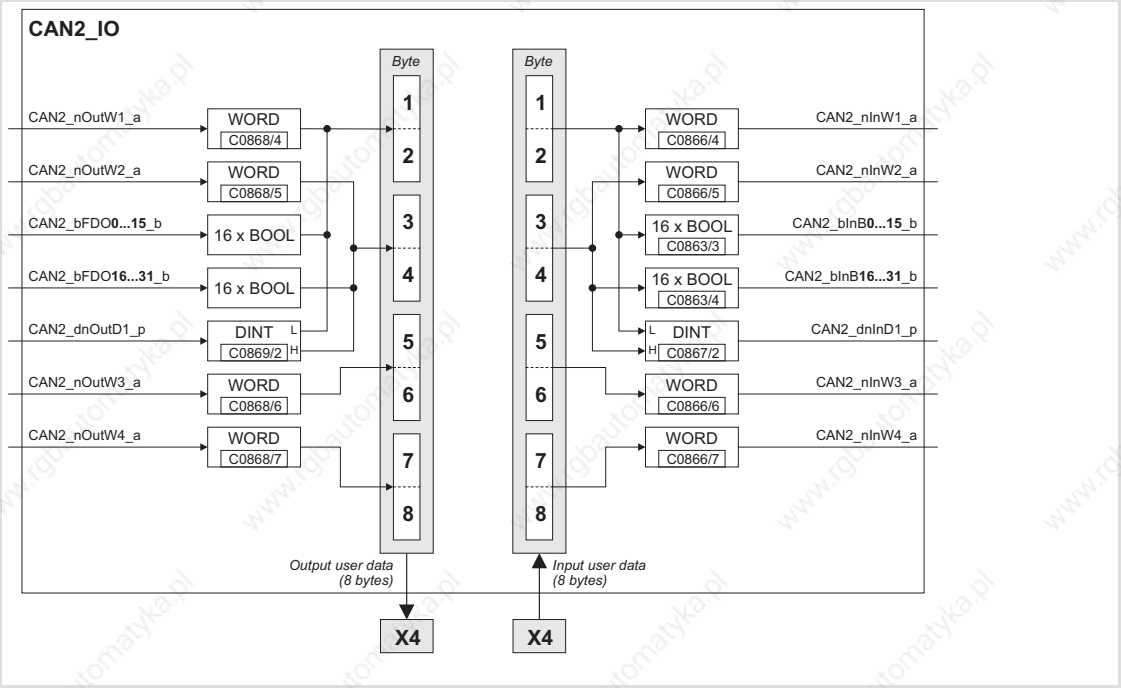

Fig. 13-14 System block "CAN2_IO"

Process data telegram

The process data telegram consists of an *identifier* and eight bytes of user data.

Identifier	8 bytes of user data							
11 bits	Byte 1	Byte 2	Byte 3	Byte 4	Byte 5	Byte 6	Byte 7	Byte 8

Codes

Code		Possible settings				IMPORTANT	
No.	Designation	Lenze/ {Appl.}	Selection				
C0356						CAN time settings for CAN bus interface X4	📖 168
1	CAN times	3000	0	{1 ms}	65000	CAN boot-up time: Delay time after mains connection for initialisation by the master.	
2	CAN times	0				CAN2_OUT/CAN3_OUT cycle times: Factor for the task time to send process data telegram. 0 = Event-controlled transmission	
3	CAN times	0					
4	CAN times	20				CAN2_OUT/CAN3_OUT delay time When the NMT state ”Operational” has been reached (after ”Pre-operational”), the delay time ”CANdelay” is started. After the delay time has expired, the PDOs CAN2_OUT and CAN3_OUT are sent for the first time.	
C0357						Monitoring time for CAN1...3_IN (CAN bus interface X4)	📖 191
1	CE monit time	3000	1	{1 ms}	65000	CE1 monitoring time	
2	CE monit time	3000				CE2 monitoring time	
3	CE monit time	3000				CE3 monitoring time	
C0863						Digital process data input words for CAN bus interface X4	📖 415
			0000	{hex}	FFFF	Hexadecimal value is bit-coded. Read only	
1	CAN IN bits		Bit 0	...	Bit15	CAN1_IN: Process data input word 1	
2	CAN IN bits		Bit 16	...	Bit 31	CAN1_IN: Process data input word 2	
3	CAN IN bits		Bit 0	...	Bit15	CAN2_IN: Process data input word 1	
4	CAN IN bits		Bit 16	...	Bit 31	CAN2_IN: Process data input word 2	
5	CAN IN bits		Bit 0	...	Bit15	CAN3_IN: Process data input word 1	
6	CAN IN bits		Bit 16	...	Bit 31	CAN3_IN: Process data input word 2	

Code		Possible settings				IMPORTANT	
No.	Designation	Lenze/ {Appl.}	Selection				
C0866						Analog process data input words (decimal) for CAN bus interface X4 100.00% = 16384 Read only	415
1	CAN IN words		-199.99	{0.01 %}	199.99	CAN1_IN word 1	
2	CAN IN words					CAN1_IN word 2	
3	CAN IN words					CAN1_IN word 3	
4	CAN IN words					CAN2_IN word 1	
5	CAN IN words					CAN2_IN word 2	
6	CAN IN words					CAN2_IN word 3	
7	CAN IN words					CAN2_IN word 4	
8	CAN IN words					CAN3_IN word 1	
9	CAN IN words					CAN3_IN word 2	
10	CAN IN words					CAN3_IN word 3	
11	CAN IN words					CAN3_IN word 4	
C0867						32-bit phase information for CAN bus interface X4 Read only	
1	CAN IN phi		-2147483648	{1}	2147483647	CAN1_IN	
2	CAN IN phi					CAN2_IN	
3	CAN IN phi					CAN3_IN	
C0868	DIS:OUTx.Wx					Analog process data output words (decimal) for CAN bus interface X4 100.00% = 16384 Read only	
1	CAN OUT words		-32768	{1 %}	32768	CAN1_OUT word 1	
2	CAN OUT words					CAN1_OUT word 2	
3	CAN OUT words					CAN1_OUT word 3	
4	CAN OUT words					CAN2_OUT word 1	
5	CAN OUT words					CAN2_OUT word 2	
6	CAN OUT words					CAN2_OUT word 3	
7	CAN OUT words					CAN2_OUT word 4	
8	CAN OUT words					CAN3_OUT word 1	
9	CAN OUT words					CAN3_OUT word 2	
10	CAN OUT words					CAN3_OUT word 3	
11	CAN OUT words					CAN3_OUT word 4	

Code		Possible settings				IMPORTANT
No.	Designation	Lenze/ {Appl.}	Selection			
C0869						32-bit phase information for CAN bus interface X4 Read only
1	CAN OUT phi		-2147483648	{1}	2147483647	CAN1_OUT
2	CAN OUT phi					CAN2_OUT
3	CAN OUT phi					CAN3_OUT

13.9.1 Inputs_CAN2

System variables

Variable	Data type	Signal type	Address	Display code	Display format	Comments
CAN2_nInW1_a	integer	analog	%IW32.0	C0866/4	dec [%]	
CAN2_nInW2_a			%IW32.1	C0866/5		
CAN2_bInB0_b ... CAN2_bInB15_b	BOOL	binary	%IX32.0.0 ... %IX32.0.0	C0863/3	hex	
CAN2_bInB16_b ... CAN2_bInB31_b			%IX32.1.0 ... %IX32.1.15	C0863/4		
CAN2_dnInD1_p	double integer	position	%ID32.0	C0867/2	dec [inc]	
CAN2_nInW3_a	integer	analog	%IW32.2	C0866/6	dec [%]	
CAN2_nInW4_a			%IW32.3	C0866/7		

User data

The first 4 bytes from the 8 bytes of received user data are assigned to several variables of different data types. According to requirements, they thus can be evaluated by the PLC program as:

- ► binary information (1 bit)
- ► quasi-analog value (16 bit)
- ► angle information (32 bit)

Byte	Variable (1 bit)	Variable (16 bit)	Variable (32 bit)
1, 2	CAN2_bInB0_b ... CAN2_bInB15_b	CAN2_nInW1_a	CAN2_dnInD1_p
3, 4	CAN2_bInB16_b ... CAN2_bInB31_b	CAN2_nInW2_a	
5, 6		CAN2_nInW3_a	
7, 8		CAN2_nInW4_a	

13.9.2 Outputs_CAN2

System variables

Variable	Data type	Signal type	Address	Display code	Display format	Comments
CAN2_nOutW1_a	integer	analog	%QW32.0	C0868/4	dec [%]	
CAN2_nOutW2_a			%QW32.1	C0868/5		
CAN2_bFDO0_b ... CAN2_bFDO15_b	BOOL	binary	%QX32.0.0 ... %QX32.0.15	C0151/2	hex	Display code in hex as double word
CAN2_bFDO16_b ... CAN2_bFDO31_b			%QX32.1.0 ... %QX32.1.15			
CAN2_dnOutD1_p	double integer	position	%QD32.0	C0869/2	dec [inc]	
CAN2_nOutW3_a	integer	analog	%QW32.2	C0868/6	dec [%]	
CAN2_nOutW4_a			%QW32.3	C0868/7		

User data

The first 4 bytes of the 8 bytes user data to be sent can be written via several variables of different data types. According to requirements, data can therefore be transferred from the PLC program as

- ► binary information (1 bit)
- ► status word/quasi-analog value (16 bit)
- ► angle information (32 bit)

Byte	Variable (1 bit)	Variable (16 bit)	Variable (32 bit)
1, 2	CAN2_bFDO0_b ... CAN2_bFDO15_b	CAN2_nOutW1_a	CAN2_dnOutD1_p
3, 4	CAN2_bFDO16_b ... CAN2_bFDO31_b	CAN2_nOutW2_a	
5, 6		CAN2_nOutW3_a	
7, 8		CAN2_nOutW4_a	

Note!

Avoid simultaneous overwriting via different variable types to ensure data consistency.

If you want to describe e.g. the bytes 1 and 2, either use only the variable *CAN2_dnOutD1_p*, only the variable *CAN2_nOutW1_a* or only the variables *CAN2_bFDO0_b ... CAN2_bFDO15_b*!

13.10 CAN3_IO (node number 33)

This SB serves to transmit event or time-controlled process data via the CAN bus interface X14.

A sync telegram is not required.

► The transmission mode (event or time-controlled) is set via C0356.

► The monitoring time is set via C0357 (Lenze setting: 3000 ms).

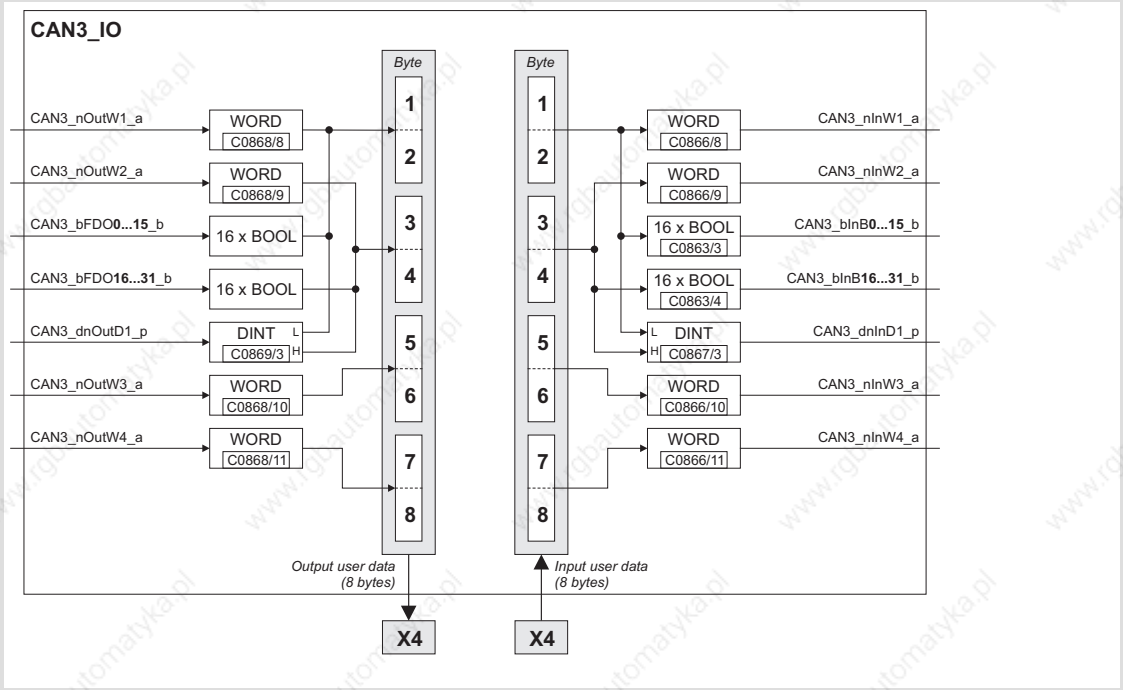

Fig. 13-15 System block "CAN3_IO"

Process data telegram

The process data telegram consists of an *identifier* and eight bytes of user data.

Identifier	8 bytes of user data							
11 bits	Byte 1	Byte 2	Byte 3	Byte 4	Byte 5	Byte 6	Byte 7	Byte 8

Codes

Code		Possible settings				IMPORTANT	
No.	Designation	Lenze/ {Appl.}	Selection				
C0356						CAN time settings for CAN bus interface X4	📖 168
1	CAN times	3000	0	{1 ms}	65000	CAN boot-up time: Delay time after mains connection for initialisation by the master.	
2	CAN times	0				CAN2_OUT/CAN3_OUT cycle times: Factor for the task time to send process data telegram. 0 = Event-controlled transmission	
3	CAN times	0					
4	CAN times	20				CAN2_OUT/CAN3_OUT delay time When the NMT state ”Operational” has been reached (after ”Pre-operational”), the delay time ”CANdelay” is started. After the delay time has expired, the PDOs CAN2_OUT and CAN3_OUT are sent for the first time.	
C0357						Monitoring time for CAN1...3_IN (CAN bus interface X4)	📖 191
1	CE monit time	3000	1	{1 ms}	65000	CE1 monitoring time	
2	CE monit time	3000				CE2 monitoring time	
3	CE monit time	3000				CE3 monitoring time	
C0863						Digital process data input words for CAN bus interface X4	📖 415
			0000	{hex}	FFFF	Hexadecimal value is bit-coded. Read only	
1	CAN IN bits		Bit 0	...	Bit15	CAN1_IN: Process data input word 1	
2	CAN IN bits		Bit 16	...	Bit 31	CAN1_IN: Process data input word 2	
3	CAN IN bits		Bit 0	...	Bit15	CAN2_IN: Process data input word 1	
4	CAN IN bits		Bit 16	...	Bit 31	CAN2_IN: Process data input word 2	
5	CAN IN bits		Bit 0	...	Bit15	CAN3_IN: Process data input word 1	
6	CAN IN bits		Bit 16	...	Bit 31	CAN3_IN: Process data input word 2	

Code		Possible settings				IMPORTANT	
No.	Designation	Lenze/ {Appl.}	Selection				
C0866						Analog process data input words (decimal) for CAN bus interface X4 100.00% = 16384 Read only	415
1	CAN IN words		-199.99	{0.01 %}	199.99	CAN1_IN word 1	
2	CAN IN words					CAN1_IN word 2	
3	CAN IN words					CAN1_IN word 3	
4	CAN IN words					CAN2_IN word 1	
5	CAN IN words					CAN2_IN word 2	
6	CAN IN words					CAN2_IN word 3	
7	CAN IN words					CAN2_IN word 4	
8	CAN IN words					CAN3_IN word 1	
9	CAN IN words					CAN3_IN word 2	
10	CAN IN words					CAN3_IN word 3	
11	CAN IN words					CAN3_IN word 4	
C0867						32-bit phase information for CAN bus interface X4 Read only	
1	CAN IN phi		-2147483648	{1}	2147483647	CAN1_IN	
2	CAN IN phi					CAN2_IN	
3	CAN IN phi					CAN3_IN	
C0868	DIS:OUTx.Wx					Analog process data output words (decimal) for CAN bus interface X4 100.00% = 16384 Read only	
1	CAN OUT words		-32768	{1 %}	32768	CAN1_OUT word 1	
2	CAN OUT words					CAN1_OUT word 2	
3	CAN OUT words					CAN1_OUT word 3	
4	CAN OUT words					CAN2_OUT word 1	
5	CAN OUT words					CAN2_OUT word 2	
6	CAN OUT words					CAN2_OUT word 3	
7	CAN OUT words					CAN2_OUT word 4	
8	CAN OUT words					CAN3_OUT word 1	
9	CAN OUT words					CAN3_OUT word 2	
10	CAN OUT words					CAN3_OUT word 3	
11	CAN OUT words					CAN3_OUT word 4	

Code		Possible settings				IMPORTANT
No.	Designation	Lenze/ {Appl.}	Selection			
C0869						32-bit phase information for CAN bus interface X4 Read only
1	CAN OUT phi		-2147483648	{1}	2147483647	CAN1_OUT
2	CAN OUT phi					CAN2_OUT
3	CAN OUT phi					CAN3_OUT

13.10.1 Inputs_CAN3

System variables

Variable	Data type	Signal type	Address	Display code	Display format	Comments
CAN3_nInW1_a	integer	analog	%IW33.0	C0866/8	dec [%]	
CAN3_nInW2_a			%IW33.1	C0866/9		
CAN3_bInB0_b ... CAN3_bInB15_b	BOOL	binary	%IX33.0.0 ... %IX33.0.15	C0863/5	hex	
CAN3_bInB16_b ... CAN3_bInB31_b			%IX33.1.0 ... %IX33.1.15	C0863/6		
CAN3_dnInD1_p	double integer	position	%ID33.0	C0867/3	dec [inc]	
CAN3_nInW3_a	integer	analog	%IW33.2	C0866/10	dec [%]	
CAN3_nInW4_a			%IW33.3	C0866/11		

User data

The first 4 bytes from the 8 bytes of received user data are assigned to several variables of different data types. According to requirements, they thus can be evaluated by the PLC program as:

- ► binary information (1 bit)
- ► quasi-analog value (16 bit)
- ► angle information (32 bit)

Byte	Variable (1 bit)	Variable (16 bit)	Variable (32 bit)
1, 2	CAN3_bInB0_b ... CAN3_bInB15_b	CAN3_nInW1_a	CAN3_dnInD1_p
3, 4	CAN3_bInB16_b ... CAN3_bInB31_b	CAN3_nInW2_a	
5, 6		CAN3_nInW3_a	
7, 8		CAN3_nInW4_a	

13.10.2 Outputs_CAN3

System variables

Variable	Data type	Signal type	Address	Display code	Display format	Comments
CAN3_nOutW1_a	integer	analog	%QW33.0	C0868/8	dec [%]	
CAN3_nOutW2_a			%QW33.1	C0868/9		
CAN3_bFDO0_b ... CAN3_bFDO15_b	BOOL	binary	%QX33.0.0 ... %QX33.0.15	C0151/3	hex	Display code in hex as double word
CAN3_bFDO16_b ... CAN3_bFDO31_b			%QX33.1.0 ... %QX33.1.15			
CAN3_dnOutD1_p	double integer	position	%QD33.0	C0869/3	dec [inc]	
CAN3_nOutW3_a	integer	analog	%QW33.2	C0868/10	dec [%]	
CAN3_nOutW4_a			%QW33.3	C0868/11		

User data

The first 4 bytes of the 8 bytes user data to be sent can be written via several variables of different data types. According to requirements, data can therefore be transferred from the PLC program as

- binary information (1 bit)
- status word/quasi-analog value (16 bit)
- angle information (32 bit)

Byte	Variable (1 bit)	Variable (16 bit)	Variable (32 bit)
1, 2	CAN3_bFDO0_b ... CAN3_bFDO15_b	CAN3_nOutW1_a	CAN3_dnOutD1_p
3, 4	CAN3_bFDO16_b ... CAN3_bFDO31_b	CAN3_nOutW2_a	
5, 6		CAN3_nOutW3_a	
7, 8		CAN3_nOutW4_a	

Note!

Avoid simultaneous overwriting via different varianle types to ensure data consistency.

If you want to describe e.g. the bytes 1 and 2, either use only the variable *CAN3_dnOutD1_p*, only the variable *CAN3_nOutW1_a* or only the variables *CAN3_bFDO0_b ... CAN3_bFDO15_b*!

13.11 CANaux_Management (node number 111)

This SB serves to

- ► activate a **reset node** to e.g. accept changes in the baud rate and addressing.
- ► process **Communication Error**, **Bus Off State** and other states in the PLC program.
- ► influence the instant of transmission of CAN2aux_OUT and CAN3aux_OUT.

In addition, the system bus communication can be monitored.

Note!

- ► The process image for this SB is created in the course of a fixed system task (interval: 1 ms).
- ► Even if this SB has not been assigned to the control configuration, a reset node can be carried out via C2458.

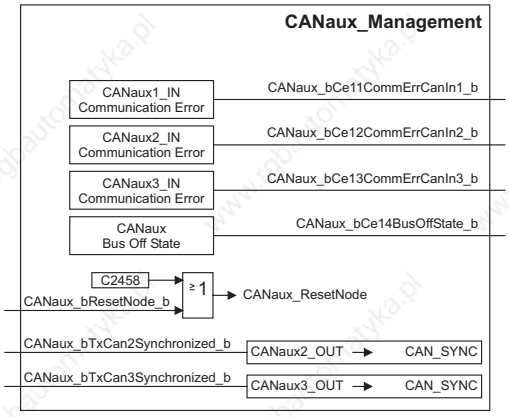

Fig. 13-16 System block "CANaux_Management"

13.11.1 Inputs_CANaux_Management

System variables

Variable	Data type	Signal type	Address	Display code	Display format	Comments
CANaux_bCe11Comm-ErrCanIn1_b	BOOL	binary	%IX111.0.0	–	–	CANaux1_IN communication error
CANaux_bCe12Comm-ErrCanIn2_b			%IX111.0.1			CANaux2_IN communication error
CANaux_bCe13Comm-ErrCanIn3_b			%IX111.0.2			CANaux3_IN communication error
CANaux_bCe14BusOffState_b			%IX111.0.3			CAN bus "Off State" detected (CAN bus interface X14)
CANaux_byNode-Address	Byte	–	%IB111.2	C2450	–	Node address (CAN bus interface X14)
CANaux_byState			%IB111.3	C2459	–	CAN bus status (CAN bus interface X14)

13.11.2 Outputs_CANaux_Management

System variables

Variable	Data type	Signal type	Address	Display code	Display format	Comments
CANaux_bResetNode_b	BOOL	binary	%QX111.0.0	–	–	Carry out reset node (CAN bus interface X14)
CANaux_bTxCan2Synchronized_b			%QX111.0.1			Transmit CANaux2_OUT with sync telegram.
CANaux_bTxCan3Synchronized_b			%QX111.0.2			Transmit CANaux3_OUT with sync telegram.

13.11.3 Executing a reset node

The following changes will only be valid after a reset node:

- Changes of the CAN node addresses and baud rates (📖 161)
- Changes of the addresses of process data objects (COB-IDs)
  – General addressing (📖 426)
  – Individual addressing (📖 164)
- Change of the master/slave boot up configuration (📖 167)

Reset node can be activated by:

- switching on the low-voltage supply
- the bus system (via the network management (NMT))
- C2458 = 1 using the XTkeypad
- *CANaux_bResetNode_b* = TRUE

Note!
If reset node is executed via GDC, communication will be interrupted. You therefore have to log in again manually or find the devices connected to the bus once again.

13.11.4 Define instant of transmission for CANaux2_OUT/CANaux3_OUT

Via *CANaux_bTxCan2Synchonized_b* and *CANaux_bTxCan3Synchonized_b* the instant of transmission for the CAN objects CANaux2_OUT and CANaux3_OUT is determined:

- **FALSE**: Data from CANaux2_OUT/CANaux3_OUT is sent at the end of the process image.
- **TRUE**: Data from CANaux2_OUT/CANaux3_OUT is sent after the CAN bus synchronisation.
  – The identifiers for sync transmission and reception telegrams can be set via C2467/C2468.
  – The *sync Tx time* can be set via C2469.

13.11.5 Status messages

The SB **CANaux_Management** provides different status messages which can be processed in the PLC program:

Identifiers	Information	
CANaux_bCe11CommErrCanIn1_b	TRUE	CANaux1_IN communication error
CANaux_bCe12CommErrCanIn1_b	TRUE	CANaux2_IN communication error
CANaux_bCe13CommErrCanIn1_b	TRUE	CANaux3_IN communication error
CANaux_bCe14BusOffState_b	TRUE	CAN bus ”Off State” detected (CAN bus interface X14)
CANaux_byNodeAddress	1 ... 63	Node address (CAN bus interface X14)
CANaux_byState	CAN bus operating status (CAN bus interface X14)	
	1	Operational
	2	Pre-Operational
	3	Warning
	4	Bus off

13.12 CANaux1_IO (node number 34)

This SB serves to transmit cyclic process data via the CAN bus interface X14.

A sync telegram which must be generated from **another** node is required for transmission.

- ► The transmission mode (event or time-controlled) is set via C2456.
- ► The monitoring time is set via C2457 (Lenze setting: 3000 ms).

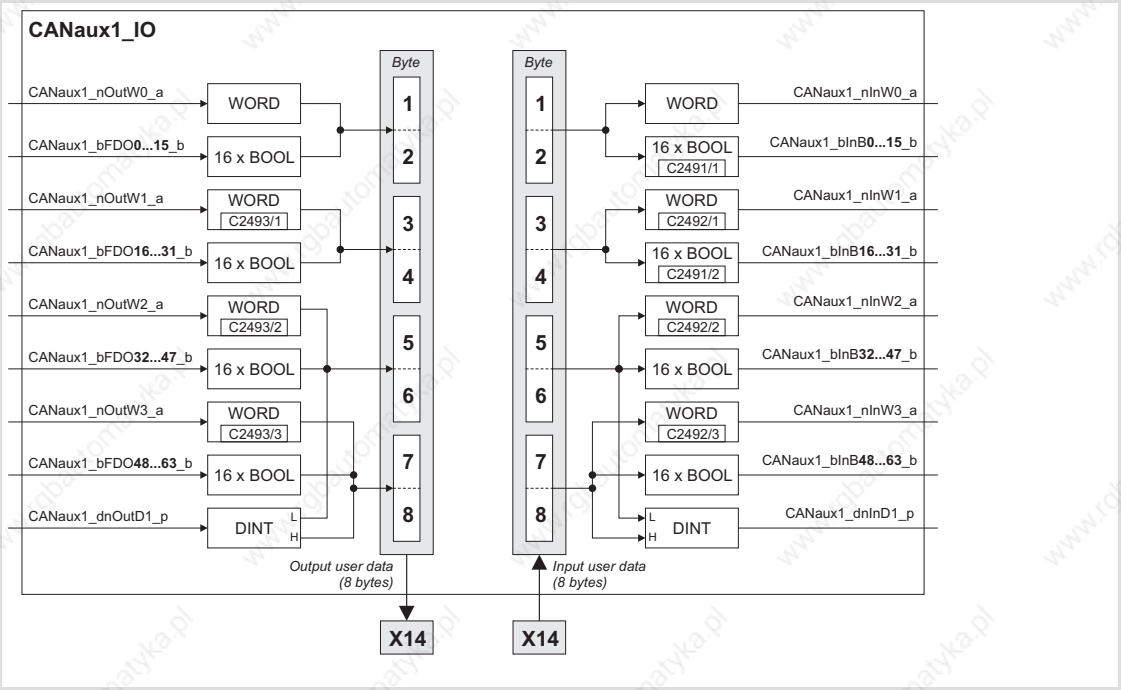

Fig. 13-17 System block "CANaux1_IO"

Process data telegram

The process data telegram consists of an *identifier* and eight bytes of user data.

Identifier	8 bytes of user data							
11 bits	Byte 1	Byte 2	Byte 3	Byte 4	Byte 5	Byte 6	Byte 7	Byte 8

Codes

Code		Possible settings				IMPORTANT	
No.	Designation	Lenze/ {Appl.}	Selection				
C2456						CAN time settings for CAN bus interface X14 (CAN-AUX)	📖 168
1	CANa times	3000	0	{1 ms}	65000	CAN-AUX boot-up time	
2	CANa times	0				CANaux2_OUT/CANaux3_OUT cycle times: Factor for the task time to send process data telegram. 0 = Event-controlled transmission	
3	CANa times	0					
4	CANa times	20				CAN-AUX delay time: When the NMT state ”Operational” has been reached (after ”Pre-operational”), the delay time ”CANdelay” is started. After the delay time has expired, the PDOs CANaux2_OUT and CANaux3_OUT are sent for the first time.	
C2457						Monitoring time for CANaux1...3_IN (CAN bus interface X14)	📖 191
1	CE monit time	3000	1	{1 ms}	65000	CE11 monitoring time	
2	CE monit time	3000				CE12 monitoring time	
3	CE monit time	3000				CE13 monitoring time	
C2491						Process data input words (hexadecimal) for CAN bus interface X14 Hexadecimal value is bit-coded. Read only	
1	CANa IN bits		0	{1 hex}	FFFF	CANaux1_IN (bit 0 ... 15)	
2	CANa IN bits					CANaux1_IN (bit 16 ... 31)	
3	CANa IN bits					CANaux2_IN (bit 0 ... 15)	
4	CANa IN bits					CANaux2_IN (bit 16 ... 31)	
5	CANa IN bits					CANaux3_IN (bit 0 ... 15)	
6	CANa IN bits					CANaux3_IN (bit 16 ... 31)	

Code		Possible settings				IMPORTANT
No.	Designation	Lenze/ {Appl.}	Selection			
C2492						Process data input words (decimal) for CAN bus interface X14 100.00% = 16384 Read only
1	CANa IN words		-199.99	{0.01 %}	199.99	CANaux1_IN word 1
2	CANa IN words					CANaux1_IN word 2
3	CANa IN words					CANaux1_IN word 3
4	CANa IN words					CANaux2_IN word 1
5	CANa IN words					CANaux2_IN word 2
6	CANa IN words					CANaux2_IN word 3
7	CANa IN words					CANaux2_IN word 4
8	CANa IN words					CANaux3_IN word 1
9	CANa IN words					CANaux3_IN word 2
10	CANa IN words					CANaux3_IN word 3
11	CANa IN words					CANaux3_IN word 4
C2493						Process data output words (decimal) for CAN bus interface X14 100.00% = 16384 Read only
1	CANa OUT words		-199.99	{0.01 %}	199.99	CANaux1_OUT word 1
2	CANa OUT words					CANaux1_OUT word 2
3	CANa OUT words					CANaux1_OUT word 3
4	CANa OUT words					CANaux2_OUT word 1
5	CANa OUT words					CANaux2_OUT word 2
6	CANa OUT words					CANaux2_OUT word 3
7	CANa OUT words					CANaux2_OUT word 4
8	CANa OUT words					CANaux3_OUT word 1
9	CANa OUT words					CANaux3_OUT word 2
10	CANa OUT words					CANaux3_OUT word 3
11	CANa OUT words					CANaux3_OUT word 4

13.12.1 Inputs_CANaux1

System variables

Variable	Data type	Signal type	Address	Display code	Display format	Comments
CANaux1_nInW0_a	integer	analog	%IW34.0	–	–	
CANaux1_bInB0_b ... CANaux1_bInB15_b	BOOL	binary	%IX34.0.0 ... %IX34.0.15	C2491/1	hex	
CANaux1_nInW1_a	integer	analog	%IW34.1	C2492/1	dec [%]	
CANaux1_bInB16_b ... CANaux1_bInB31_b	BOOL	binary	%IX34.1.0 ... %IX34.1.15	C2491/2	hex	
CANaux1_nInW2_a	integer	analog	%IW34.2	C2492/2	dec [%]	
CANaux1_bInB32_b ... CANaux1_bInB47_b	BOOL	binary	%IX34.2.0 ... %IX34.2.15	–	–	
CANaux1_nInW3_a	integer	analog	%IW34.3	C2492/3	dec [%]	
CANaux1_bInB48_b ... CANaux1_bInB63_b	BOOL	binary	%IX34.3.0 ... %IX34.3.15	–	–	
CANaux1_dnInD1_p	double integer	position	%ID34.1	–	–	

User data

The 8 bytes of received user data are assigned to several variables of different data types. According to requirements, they can thus be evaluated by the PLC program as:

- ► binary information (1 bit)
- ► control word/quasi-analog value (16 bit)
- ► angle information (32 bit)

Byte	Variable (1 bit)	Variable (16 bit)	Variable (32 bit)
1, 2	CANaux1_bInB0_b ... CANaux1_bInB15_b	CANaux1_nInW0_a	
3, 4	CANaux1_bInB16_b ... CANaux1_bInB31_b	CANaux1_nInW1_a	
5, 6	CANaux1_bInB32_b ... CANaux1_bInB47_b	CANaux1_nInW2_a	CANaux1_dnInD1_p
7, 8	CANaux1_bInB48_b ... CANaux1_bInB63_b	CANaux1_nInW3_a	

13.12.2 Outputs_CANaux1

System variables

Variable	Data type	Signal type	Address	Display code	Display format	Comments
CANaux1_nOutW0_a	integer	analog	%QW34.0	–	–	
CANaux1_bFDO0_b ... CANaux1_bFDO15_b	BOOL	binary	%QX34.0.0 ... %QX34.0.15	–	–	
CANaux1_nOutW1_a	integer	analog	%QW34.1	C2493/1	dec [%]	
CANaux1_bFDO16_b ... CANaux1_bFDO31_b	BOOL	binary	%QX34.1.0 ... %QX34.1.15	–	–	
CANaux1_nOutW2_a	integer	analog	%QW34.2	C2493/2	dec [%]	
CANaux1_bFDO32_b ... CANaux1_bFDO47_b	BOOL	binary	%QX34.2.0 ... %QX34.2.15	–	–	
CANaux1_nOutW3_a	integer	analog	%QW34.3	C2493/3	dec [%]	
CANaux1_bFDO48_b ... CANaux1_bFDO63_b	BOOL	binary	%QX34.3.0 ... %QX34.3.15	–	–	
CANaux1_dnOutD1_p	double integer	position	%QD34.1	–	–	

User data

The 8 bytes of user data to be sent can be written via several variables of different data types. According to requirements, data can therefore be transferred from the PLC program as

- ► binary information (1 bit)
- ► status word/quasi-analog value (16 bit)
- ► angle information (32 bit)

Byte	Variable (1 bit)	Variable (16 bit)	Variable (32 bit)
1, 2	CANaux1_bFDO0_b ... CANaux1_bFDO15_b	CANaux1_nOutW0_a	
3, 4	CANaux1_bFDO16_b ... CANaux1_bFDO31_b	CANaux1_nOutW1_a	
5, 6	CANaux1_bFDO32_b ... CANaux1_bFDO47_b	CANaux1_nOutW2_a	CANaux1_dnOutD1_p
7, 8	CANaux1_bFDO48_b ... CANaux1_bFDO63_b	CANaux1_nOutW3_a	

Note!

Avoid simultaneous overwriting via different variable types to ensure data consistency.

If you want to describe e.g. the bytes 5 and 6, either use only the variable *CANaux1_dnOutD1_p*, only the variable *CANaux1_nOutW2_a* or only the variables *CANaux1_bFDO32_b* ... *CANaux1_bFDO47_b*!

13.13 CANaux2_IO (node number 35)

This SB serves to transmit event or time-controlled process data via the CAN bus interface X14.

A sync telegram is not required.

- ► The transmission mode (event or time-controlled) is set via C2456.
- ► The monitoring time is set via C2457 (Lenze setting: 3000 ms).

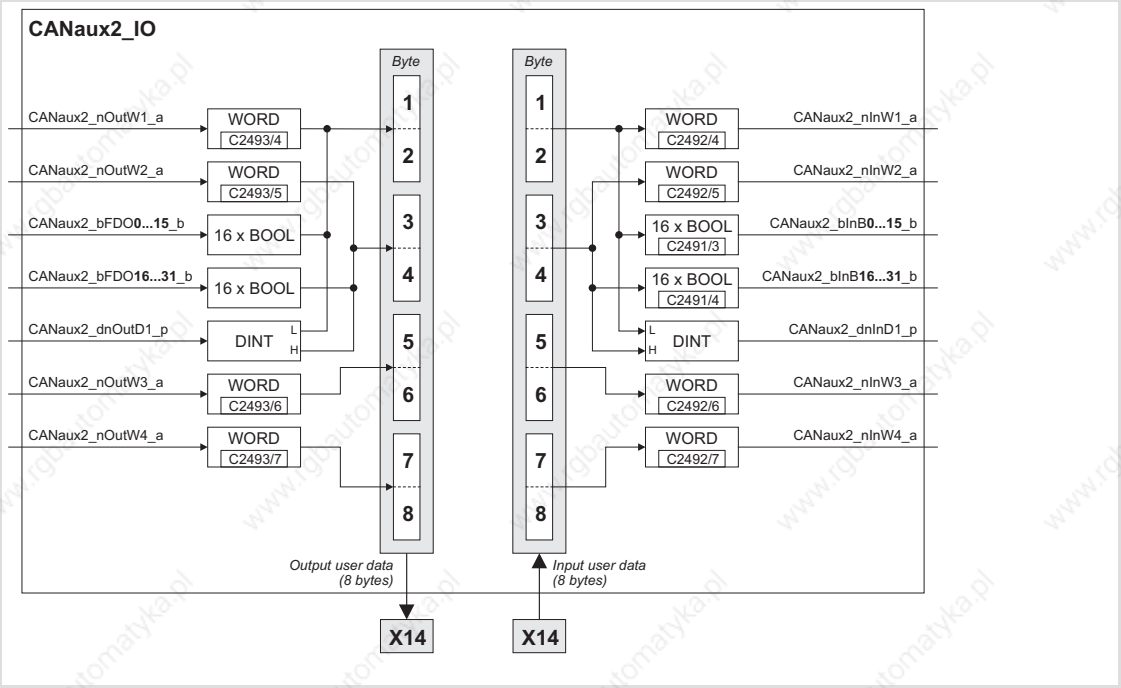

Fig. 13-18 System block "CANaux2_IO"

Process data telegram

The process data telegram consists of an *identifier* and eight bytes of user data.

Identifier	8 bytes of user data							
11 bits	Byte 1	Byte 2	Byte 3	Byte 4	Byte 5	Byte 6	Byte 7	Byte 8

Codes

Code		Possible settings				IMPORTANT	
No.	Designation	Lenze/ {Appl.}	Selection				
C2456						CAN time settings for CAN bus interface X14 (CAN-AUX)	📖 168
1	CANa times	3000	0	{1 ms}	65000	CAN-AUX boot-up time	
2	CANa times	0				CANaux2_OUT/CANaux3_OUT cycle times: Factor for the task time to send process data telegram. 0 = Event-controlled transmission	
3	CANa times	0					
4	CANa times	20				CAN-AUX delay time: When the NMT state ”Operational” has been reached (after ”Pre-operational”), the delay time ”CANdelay” is started. After the delay time has expired, the PDOs CANaux2_OUT and CANaux3_OUT are sent for the first time.	
C2457						Monitoring time for CANaux1...3_IN (CAN bus interface X14)	📖 191
1	CE monit time	3000	1	{1 ms}	65000	CE11 monitoring time	
2	CE monit time	3000				CE12 monitoring time	
3	CE monit time	3000				CE13 monitoring time	
C2491						Process data input words (hexadecimal) for CAN bus interface X14 Hexadecimal value is bit-coded. Read only	
1	CANa IN bits		0	{1 hex}	FFFF	CANaux1_IN (bit 0 ... 15)	
2	CANa IN bits					CANaux1_IN (bit 16 ... 31)	
3	CANa IN bits					CANaux2_IN (bit 0 ... 15)	
4	CANa IN bits					CANaux2_IN (bit 16 ... 31)	
5	CANa IN bits					CANaux3_IN (bit 0 ... 15)	
6	CANa IN bits					CANaux3_IN (bit 16 ... 31)	

Code		Possible settings				IMPORTANT
No.	Designation	Lenze/ {Appl.}	Selection			
C2492						Process data input words (decimal) for CAN bus interface X14 100.00% = 16384 Read only
1	CANa IN words		-199.99	{0.01 %}	199.99	CANaux1_IN word 1
2	CANa IN words					CANaux1_IN word 2
3	CANa IN words					CANaux1_IN word 3
4	CANa IN words					CANaux2_IN word 1
5	CANa IN words					CANaux2_IN word 2
6	CANa IN words					CANaux2_IN word 3
7	CANa IN words					CANaux2_IN word 4
8	CANa IN words					CANaux3_IN word 1
9	CANa IN words					CANaux3_IN word 2
10	CANa IN words					CANaux3_IN word 3
11	CANa IN words					CANaux3_IN word 4
C2493						Process data output words (decimal) for CAN bus interface X14 100.00% = 16384 Read only
1	CANa OUT words		-199.99	{0.01 %}	199.99	CANaux1_OUT word 1
2	CANa OUT words					CANaux1_OUT word 2
3	CANa OUT words					CANaux1_OUT word 3
4	CANa OUT words					CANaux2_OUT word 1
5	CANa OUT words					CANaux2_OUT word 2
6	CANa OUT words					CANaux2_OUT word 3
7	CANa OUT words					CANaux2_OUT word 4
8	CANa OUT words					CANaux3_OUT word 1
9	CANa OUT words					CANaux3_OUT word 2
10	CANa OUT words					CANaux3_OUT word 3
11	CANa OUT words					CANaux3_OUT word 4

13.13.1 Inputs_CANaux2

System variables

Variable	Data type	Signal type	Address	Display code	Display format	Comments
CANaux2_nInW1_a	integer	analog	%IW35.0	C2492/4	dec [%]	
CANaux2_nInW2_a			%IW35.1	C2492/5		
CANaux2_bInB0_b ... CANaux2_bInB15_b	BOOL	binary	%IX35.0.0 ... %IX35.0.15	C2491/3	hex	
CANaux2_bInB16_b ... CANaux2_bInB31_b			%IX35.1.0 ... %IX35.1.15	C2491/4		
CANaux2_dnInD1_p	double integer	position	%ID35.0	–	–	
CANaux2_nInW3_a	integer	analog	%IW35.2	C2492/6	dec [%]	
CANaux2_nInW4_a			%IW35.3	C2492/7		

User data

The first 4 bytes from the 8 bytes of received user data are assigned to several variables of different data types. According to requirements, they thus can be evaluated by the PLC program as:

- binary information (1 bit)
- quasi-analog value (16 bit)
- angle information (32 bit)

Byte	Variable (1 bit)	Variable (16 bit)	Variable (32 bit)
1, 2	CANaux2_bInB0_b ... CANaux2_bInB15_b	CANaux2_nInW1_a	CANaux2_dnInD1_p
3, 4	CANaux2_bInB16_b ... CANaux2_bInB31_b	CANaux2_nInW2_a	
5, 6		CANaux2_nInW3_a	
7, 8		CANaux2_nInW4_a	

13.13.2 Outputs_CANaux2

System variables

Variable	Data type	Signal type	Address	Display code	Display format	Comments
CANaux2_nOutW1_a	integer	analog	%QW35.0	C2493/4	dec [%]	
CANaux2_nOutW2_a			%QW35.1	C2493/5		
CANaux2_bFDO0_b ... CANaux2_bFDO15_b	BOOL	Binary	%QX35.0.0 ... %QX35.0.15	–	–	
CANaux2_bFDO16_b ... CANaux2_bFDO31_b			%QX35.1.0 ... %QX35.1.15			
CANaux2_dnOutD1_p	Double integer	Position	%QD35.0	–	–	
CANaux2_nOutW3_a	integer	analog	%QW35.2	C2493/6	dec [%]	
CANaux2_nOutW4_a			%QW35.3	C2493/7		

User data

The first 4 bytes of the 8 bytes user data to be sent can be written via several variables of different data types. According to requirements, data can therefore be transferred from the PLC program as

- binary information (1 bit)
- status word/quasi-analog value (16 bit)
- angle information (32 bit)

Byte	Variable (1 bit)	Variable (16 bit)	Variable (32 bit)
1, 2	CANaux2_bFDO0_b ... CANaux2_bFDO15_b	CANaux2_nOutW1_a	CANaux2_dnOutD1_p
3, 4	CANaux2_bFDO16_b ... CANaux2_bFDO31_b	CANaux2_nOutW2_a	
5, 6		CANaux2_nOutW3_a	
7, 8		CANaux2_nOutW4_a	

Note!

Avoid simultaneous overwriting via different variable types to ensure data consistency.

If you want to describe e.g. the bytes 1 and 2, either use only the variable *CANaux2_dnOutD1_p*, or the variable *CANaux2_nOutW1_a* or only the variables *CANaux2_bFDO0_b* ... *CANaux2_bFDO15_b*!

13.14 CANaux3_IO (node number 36)

This SB serves to transmit event or time-controlled process data via the CAN bus interface X14.

A sync telegram is not required.

► The transmission mode (event or time-controlled) is set via C2456.

► The monitoring time is set via C2457 (Lenze setting: 3000 ms).

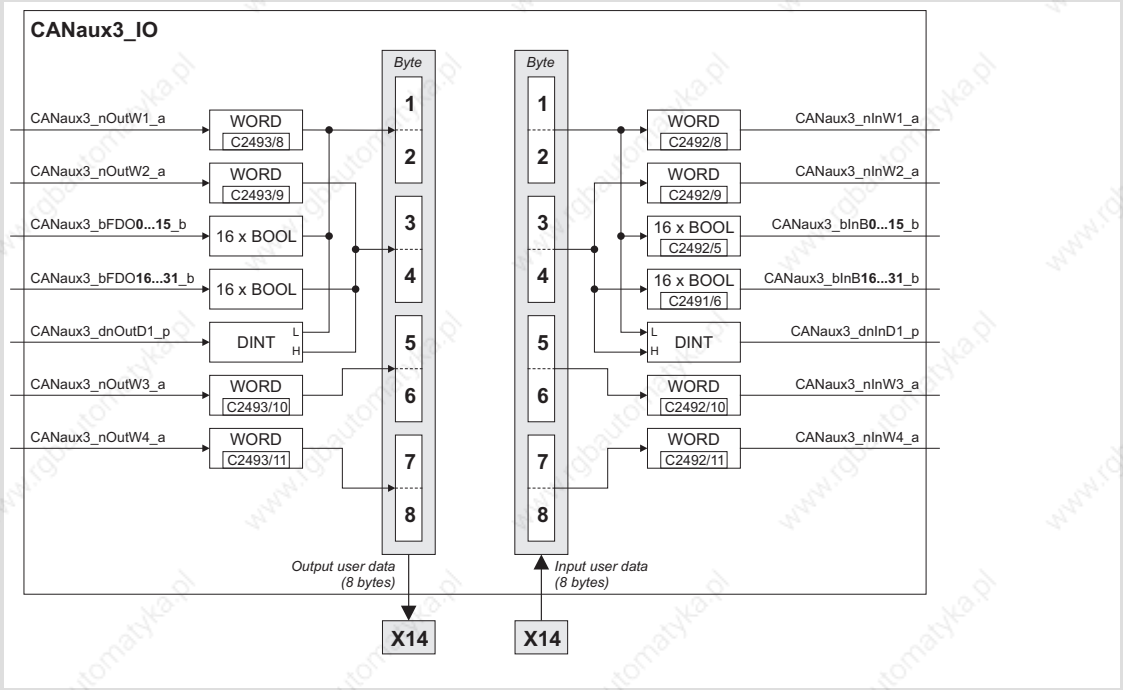

Fig. 13-19 System block "CANaux3_IO"

Process data telegram

The process data telegram consists of an *identifier* and eight bytes of user data.

Identifier	8 bytes of user data							
11 bits	Byte 1	Byte 2	Byte 3	Byte 4	Byte 5	Byte 6	Byte 7	Byte 8

Codes

Code		Possible settings				IMPORTANT	
No.	Designation	Lenze/ {Appl.}	Selection				
C2456						CAN time settings for CAN bus interface X14 (CAN-AUX)	📖 168
1	CANa times	3000	0	{1 ms}	65000	CAN-AUX boot-up time	
2	CANa times	0				CANaux2_OUT/CANaux3_OUT cycle times: Factor for the task time to send process data telegram. 0 = Event-controlled transmission	
3	CANa times	0					
4	CANa times	20				CAN-AUX delay time: When the NMT state ”Operational” has been reached (after ”Pre-operational”), the delay time ”CANdelay” is started. After the delay time has expired, the PDOs CANaux2_OUT and CANaux3_OUT are sent for the first time.	
C2457						Monitoring time for CANaux1...3_IN (CAN bus interface X14)	📖 191
1	CE monit time	3000	1	{1 ms}	65000	CE11 monitoring time	
2	CE monit time	3000				CE12 monitoring time	
3	CE monit time	3000				CE13 monitoring time	
C2491						Process data input words (hexadecimal) for CAN bus interface X14 Hexadecimal value is bit-coded. Read only	
1	CANa IN bits		0	{1 hex}	FFFF	CANaux1_IN (bit 0 ... 15)	
2	CANa IN bits					CANaux1_IN (bit 16 ... 31)	
3	CANa IN bits					CANaux2_IN (bit 0 ... 15)	
4	CANa IN bits					CANaux2_IN (bit 16 ... 31)	
5	CANa IN bits					CANaux3_IN (bit 0 ... 15)	
6	CANa IN bits					CANaux3_IN (bit 16 ... 31)	

Code		Possible settings				IMPORTANT
No.	Designation	Lenze/ {Appl.}	Selection			
C2492						Process data input words (decimal) for CAN bus interface X14 100.00% = 16384 Read only
1	CANa IN words		-199.99	{0.01 %}	199.99	CANaux1_IN word 1
2	CANa IN words					CANaux1_IN word 2
3	CANa IN words					CANaux1_IN word 3
4	CANa IN words					CANaux2_IN word 1
5	CANa IN words					CANaux2_IN word 2
6	CANa IN words					CANaux2_IN word 3
7	CANa IN words					CANaux2_IN word 4
8	CANa IN words					CANaux3_IN word 1
9	CANa IN words					CANaux3_IN word 2
10	CANa IN words					CANaux3_IN word 3
11	CANa IN words					CANaux3_IN word 4
C2493						Process data output words (decimal) for CAN bus interface X14 100.00% = 16384 Read only
1	CANa OUT words		-199.99	{0.01 %}	199.99	CANaux1_OUT word 1
2	CANa OUT words					CANaux1_OUT word 2
3	CANa OUT words					CANaux1_OUT word 3
4	CANa OUT words					CANaux2_OUT word 1
5	CANa OUT words					CANaux2_OUT word 2
6	CANa OUT words					CANaux2_OUT word 3
7	CANa OUT words					CANaux2_OUT word 4
8	CANa OUT words					CANaux3_OUT word 1
9	CANa OUT words					CANaux3_OUT word 2
10	CANa OUT words					CANaux3_OUT word 3
11	CANa OUT words					CANaux3_OUT word 4

13.14.1 Inputs_CANaux3

System variables

Variable	Data type	Signal type	Address	Display code	Display format	Comments
CANaux3_nInW1_a	integer	analog	%IW36.0	C2492/8	dec [%]	
CANaux3_nInW2_a			%IW36.1	C2492/9		
CANaux3_bInB0_b ... CANaux3_bInB15_b	BOOL	Binary	%IX36.0.0 ... %IX36.0.15	C2491/5	hex	
CANaux3_bInB16_b ... CANaux3_bInB31_b			%IX36.1.0 ... %IX36.1.15	C2491/6		
CANaux3_dnInD1_p	Double integer	Position	%ID36.0	–	–	
CANaux3_nInW3_a	integer	analog	%IW36.2	C2492/10	dec [%]	
CANaux3_nInW4_a			%IW36.3	C2492/11		

User data

The first 4 bytes from the 8 bytes of received user data are assigned to several variables of different data types. According to requirements, they thus can be evaluated by the PLC program as:

- binary information (1 bit)
- quasi-analog value (16 bit)
- angle information (32 bit)

Byte	Variable (1 bit)	Variable (16 bit)	Variable (32 bit)
1, 2	CANaux3_bInB0_b ... CANaux3_bInB15_b	CANaux3_nInW1_a	CANaux3_dnInD1_p
3, 4	CANaux3_bInB16_b ... CANaux3_bInB31_b	CANaux3_nInW2_a	
5, 6		CANaux3_nInW3_a	
7, 8		CANaux3_nInW4_a	

13.14.2 Outputs_CANaux3

System variables

Variable	Data type	Signal type	Address	Display code	Display format	Comments
CANaux3_nOutW1_a	integer	analog	%QW36.0	C2493/8	dec [%]	
CANaux3_nOutW2_a			%QW36.1	C2493/9		
CANaux3_bFDO0_b ... CANaux3_bFDO15_b	BOOL	binary	%QX36.0.0 ... %QX36.0.15	–	–	
CANaux3_bFDO16_b ... CANaux3_bFDO31_b			%QX36.1.0 ... %QX36.1.15			
CANaux3_dnOutD1_p	double integer	position	%QD36.0	–	–	
CANaux3_nOutW3_a	integer	analog	%QW36.2	C2493/10	dec [%]	
CANaux3_nOutW4_a			%QW36.3	C2493/11		

User data

The first 4 bytes of the 8 bytes user data to be sent can be written via several variables of different data types. According to requirements, data can therefore be transferred from the PLC program as

- binary information (1 bit)
- status word/quasi-analog value (16 bit)
- angle information (32 bit)

Byte	Variable (1 bit)	Variable (16 bit)	Variable (32 bit)
1, 2	CANaux3_bFDO0_b ... CANaux3_bFDO15_b	CANaux3_nOutW1_a	CANaux3_dnOutD1_p
3, 4	CANaux3_bFDO16_b ... CANaux3_bFDO31_b	CANaux3_nOutW2_a	
5, 6		CANaux3_nOutW3_a	
7, 8		CANaux3_nOutW4_a	

Note!

Avoid simultaneous overwriting via different variable types to ensure data consistency.

If you want to describe e.g. the bytes 1 and 2, either use only the variable *CANaux3_dnOutD1_p*, or only the variable *CANaux3_nOutW1_a* or only the variables *CANaux3_bFDO0_b* ... *CANaux3_bFDO15_b*!

13.15 DCTRL_DriveControl (node number 121)

Node number 121

This SB controls the axis module to different states:

- ► Quick stop (QSP, 📖 303)
- ► Operation inhibit (DISABLE, 📖 303)
- ► Controller inhibit (CINH, 📖 304)
- ► Setting a TRIP (TRIP-SET, 📖 304)
- ► Resetting a TRIP (TRIP-RESET, 📖 305)

Via C0150, the status of the axis module is displayed (📖 215).

The process image is established in the course of a fixed system task (interval: 2 ms).

Note!

The SB **DCTRL_DriveControl** only affects the motor control or the drive control. Motor control/drive control and application program of the PLC are decoupled from one another, provided that no query of the signals is effected in the application program.

- ► If, for instance, a TRIP is activated by the motor control, the application program thereby is not stopped!
- ► If, in contrast, a TRIP is activated as a result of a task overflow, the application program of the PLC is stopped as well!

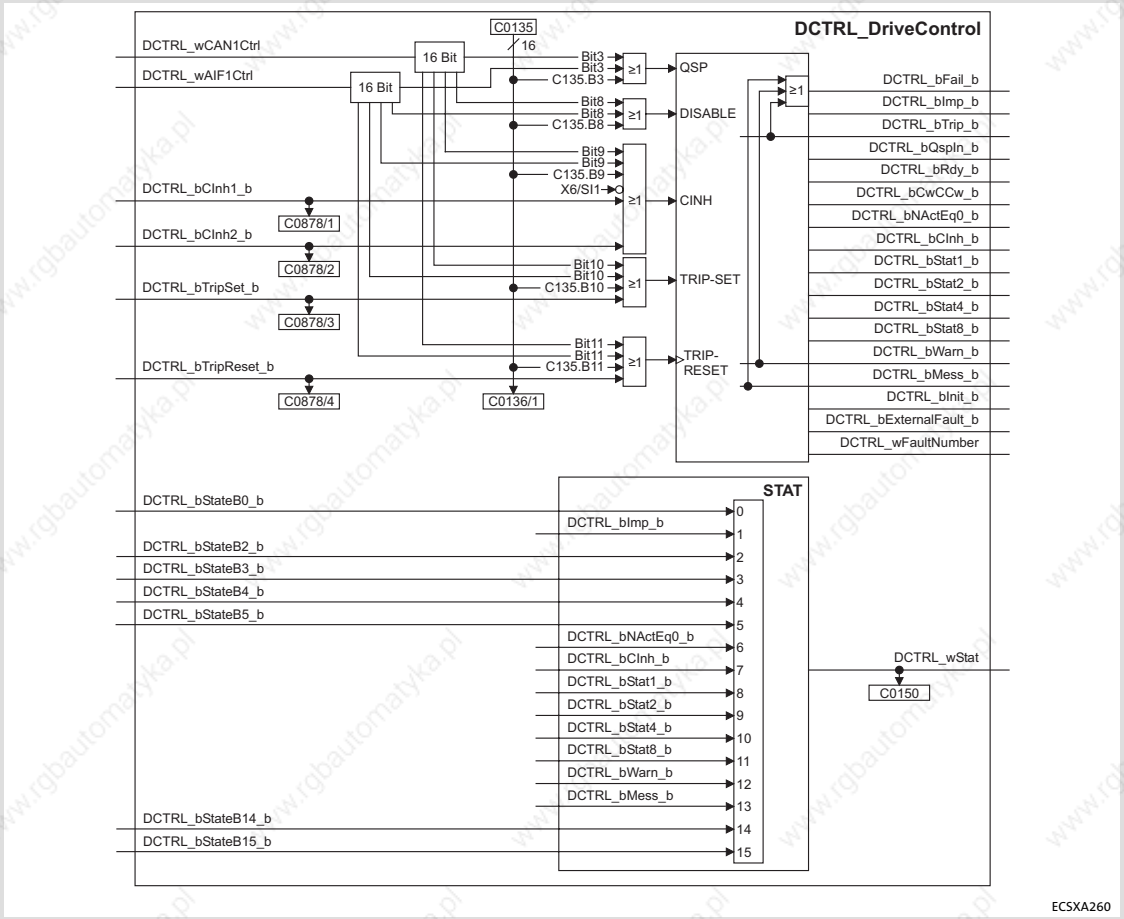

Fig. 13-20 System block "DCTRL_DriveControl"

13.15.1 Inputs_DCTRL

System variables

Variable	Data type	Signal type	Address	Display code	Display format	Notes
DCTRL_bFail_b	Bool	Binary	%IX121.0.0	–	–	TRUE = active error
DCTRL_bImp_b			%IX121.0.1			TRUE = high-resistance power output stages
DCTRL_bTrip_b			%IX121.0.2			TRUE = active error
DCTRL_bQspIn_b			%IX121.0.3			TRUE = quick stop (QSP) (📖 303)
DCTRL_bRdy_b			%IX121.0.4			TRUE = ready for operation
DCTRL_bCwCcw_b			%IX121.0.5			FALSE = CW rotation TRUE = CCW rotation
DCTRL_bNActEq0_b			%IX121.0.6			TRUE = motor speed < C0019
DCTRL_bCInh_b			%IX121.0.7			TRUE = controller inhibit (📖 304)
DCTRL_bStat1_b	Bool	Binary	%IX121.0.8	–	–	Status signals (📖 305)
DCTRL_bStat2_b			%IX121.0.9			
DCTRL_bStat4_b			%IX121.0.10			
DCTRL_bStat8_b			%IX121.0.11			
DCTRL_bWarn_b	Bool	Binary	%IX121.0.12	–	–	TRUE = active warning
DCTRL_bMess_b			%IX121.0.13			TRUE = active message
DCTRL_bInit_b			%IX121.0.14			TRUE = initialisation phase
DCTRL_bExternalFault_b			%IX121.0.15			TRUE = external error (📖 306)
DCTRL_wStat	Word	–	%IW121.1	C0150	hex	Status word (📖 305)
DCTRL_wFaultNumber			%IW121.2	C0168		Current error number (📖 344)

Codes

Code		Possible settings			IMPORTANT
No.	Designation	Lenze/ {Appl.}	Selection		
C0136					Control words Hexadecimal value is bit-coded. Read only
1	CTRLWORD		0	{hex} FFFF	Control word C0135
2	CTRLWORD				CAN control word
3	CTRLWORD				AIF control word

Code		Possible settings			IMPORTANT	
No.	Designation	Lenze/ {Appl.}	Selection			
C0150	Status word	0			DCTRL status word 1 Only display	📖 305
			0 {1} 65535		Controller evaluates information as 16 bits (binary-coded)	
			Bit 0	Not assigned	DCTRL_bStateB0_b	
			Bit 1	Pulse inhibit (IMP)	DCTRL_bImp_b	
			Bit 2	Not assigned	DCTRL_bStateB2_b	
			Bit 3	Not assigned	DCTRL_bStateB3_b	
			Bit 4	Not assigned	DCTRL_bStateB4_b	
			Bit 5	Not assigned	DCTRL_bStateB5_b	
			Bit 6	n = 0	DCTRL_bNActEq0_b	
			Bit 7	Controller inhibit (CINH)	DCTRL_bCInh_b	
			Bit 8	Status code	DCTRL_bStat1_b	
			Bit 9	Status code	DCTRL_bStat2_b	
			Bit 10	Status code	DCTRL_bStat4_b	
			Bit 11	Status code	DCTRL_bStat8_b	
			Bit 12	Warning	DCTRL_bWarn_b	
			Bit 13	Message	DCTRL_bMess_b	
			Bit 14	Not assigned	DCTRL_bStateB14_b	
			Bit 15	Not assigned	DCTRL_bStateB15_b	
C0878					Digital input signals to DCTRL Only display	📖 300
1	DigInOfDCTRL		0	1	Controller inhibit (CINH) 1	
2	DigInOfDCTRL				Controller inhibit (CINH) 2	
3	DigInOfDCTRL				TRIP-set	
4	DigInOfDCTRL				TRIP-RESET	

13.15.2 Outputs_DCTRL

System variables

Variable	Data type	Signal type	Address	Display code	Display format	Notes
DCTRL_wCAN1Ctrl	Word	–	%QW121.3	–	–	CAN control word
DCTRL_wAIF1Ctrl			%QW121.2			Control word AIF
DCTRL_bCInh1_b	BOOL	binary	%QX121.0.1	C0878/1	bin	Controller inhibit (📖 304)
DCTRL_bCInh2_b			%QX121.0.2	C0878/2		
DCTRL_bTripSet_b			%QX121.0.3	C0878/3		TRIP SET (📖 304)
DCTRL_bTripReset_b			%QX121.0.4	C0878/4		TRIP RESET (📖 305)
DCTRL_bStatB0_b	BOOL	binary	%QX121.1.0	–	–	Status signals (📖 305)
DCTRL_bStatB2_b			%QX121.1.2			
DCTRL_bStatB3_b			%QX121.1.3			
DCTRL_bStatB4_b			%QX121.1.4			
DCTRL_bStatB5_b			%QX121.1.5			
DCTRL_bStatB14_b			%QX121.1.14			
DCTRL_bStatB15_b			%QX121.1.15			

Codes

Code		Possible settings			IMPORTANT
No.	Designation	Lenze/ {Appl.}	Selection		
C0135	Control word	0			System control word DCTRL
			0 {1} 65535		Controller evaluates information as 16 bits (binary-coded)
			Bit 0	Not assigned	
			Bit 1	Not assigned	
			Bit 2	Not assigned	
			Bit 3	Quick stop (QSP)	
			Bit 4	Not assigned	
			Bit 5	Not assigned	
			Bit 6	Not assigned	
			Bit 7	Not assigned	
			Bit 8	Operation inhibit (DISABLE)	
			Bit 9	Controller inhibit (CINH)	
			Bit 10	TRIP-SET	
			Bit 11	TRIP-RESET	
			Bit 12	Not assigned	
			Bit 13	Not assigned	
			Bit 14	Not assigned	
			Bit 15	Not assigned	

13.15.3 Quick stop (QSP)

The QSP function serves to stop the drive – irrespective of the setpoint selection – within the time adjusted in C0105.

► The function can be controlled via the following inputs (OR'd):
– Control word *DCTRL_wAIF1Ctrl* (📖 235)
– Control word *DCTRL_wCAN1Ctrl* (📖 263)
– Control word C0135, bit 3

► C0136/1 indicates the control word C0135.

Note!
Quick stop (QSP) only is set if *DCTRL_bQspIn_b* is connected to *MCTRL_bQspOut_b* of the SB **MCTRL_MotorControl** (📖 329)!

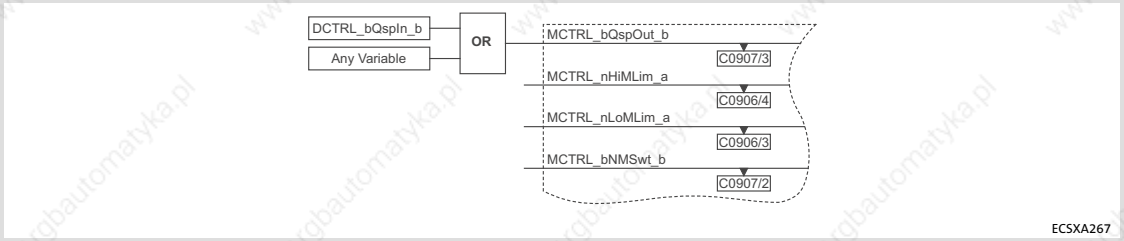

Fig. 13-21 Programming: actuation of a quick stop (QSP) via SB "Inputs_DCTRL"

Code		Possible settings				IMPORTANT	
No.	Designation	Lenze/ {Appl.}	Selection				
C0105	QSP Tif	0.0				Deceleration time for quick stop (QSP)	📖 303 📖 337
			0.000	{0.001 s}	999.999	Relating to speed variation n_{max} (C0011) ...0 rev./min.	📖 303

13.15.4 Operation inhibit (DISABLE)

This function actuates an "operation inhibit" (DISABLE) in the drive. The power output stages are inhibited, and all speed controllers/current controllers/position controllers are reset. In the "operation inhibit" state, the drive cannot be started by the command "controller enable".

► The function can be controlled via the following inputs (OR'd):
– Control word *DCTRL_wAIF1Ctrl* (📖 235)
– Control word *DCTRL_wCAN1Ctrl* (📖 263)
– Control word C0135, bit 8

► C0136/1 indicates the control word C0135.

13.15.5 Controller inhibit (CINH)

This function activates ”controller inhibit (CINH)” in the drive. The power output stages are inhibited, and all speed controllers/current controllers/position controllers are reset.

► The function can be controlled via the following inputs (OR’d):
– Terminal X6/SI1 (FALSE = controller inhibit)
– Control word *DCTRL_wAIF1Ctrl* (📖 235)
– Control word *DCTRL_wCAN1Ctrl* (📖 263)
– Control word C0135, bit 9
– Variable *DCTRL_bCInh1_b* (TRUE = inhibit controller)
– Variable *DCTRL_bCInh2_b* (TRUE = inhibit controller)

► C0136/1 indicates the control word C0135.

13.15.6 Setting TRIP (TRIP-SET)

This function sets ”TRIP” in the drive and reports ”external error” (error message ”EEr”).

► The function can be controlled via the following inputs (OR’d):
– Control word *DCTRL_wAIF1Ctrl* (📖 235)
– Control word *DCTRL_wCAN1Ctrl* (📖 263)
– Control word C0135, bit 10
– Variable *DCTRL_bTripSet_b* (TRUE = set TRIP)

► C0136/1 indicates the control word C0135.

► The reaction to TRIP can be set via C0581:

Code		Possible settings		IMPORTANT	
No.	Designation	Lenze/ {Appl.}	Selection		
C0581	MONIT EEr	0		Configuration of external fault monitoring ”ExternalFault” (FWM EEr)	📖 304
			0 TRIP		
			1 Message		
			2 Warning		
			3 Off		
			4 FAIL-QSP		

13.15.7 Resetting TRIP (TRIP-RESET)

This function resets an upcoming TRIP if the cause of malfunction is eliminated. If the cause of malfunction is still active, no response will be effected.

► The function can be controlled via the following inputs (OR'd):
– Control word *DCTRL_wAIF1Ctrl* (📖 235)
– Control word *DCTRL_wCAN1Ctrl* (📖 263)
– Control word C0135, bit 11
– Variable *DCTRL_bTripReset_b*
– Code C0043

► C0136/1 indicates the control word C0135.

Note!
The function is only carried out by a FALSE-TRUE edge of the signal resulting from the OR operation.
If one input is assigned to TRUE, a FALSE-TRUE edge cannot occur.

13.15.8 Display of digital status signals

Via *DCTRL_wStat*, a status word is output, consisting of signals generated by the SB **DCTRL_DriveControl** as well as of signals of freely configurable SB inputs.

The status word can be displayed via C0150.

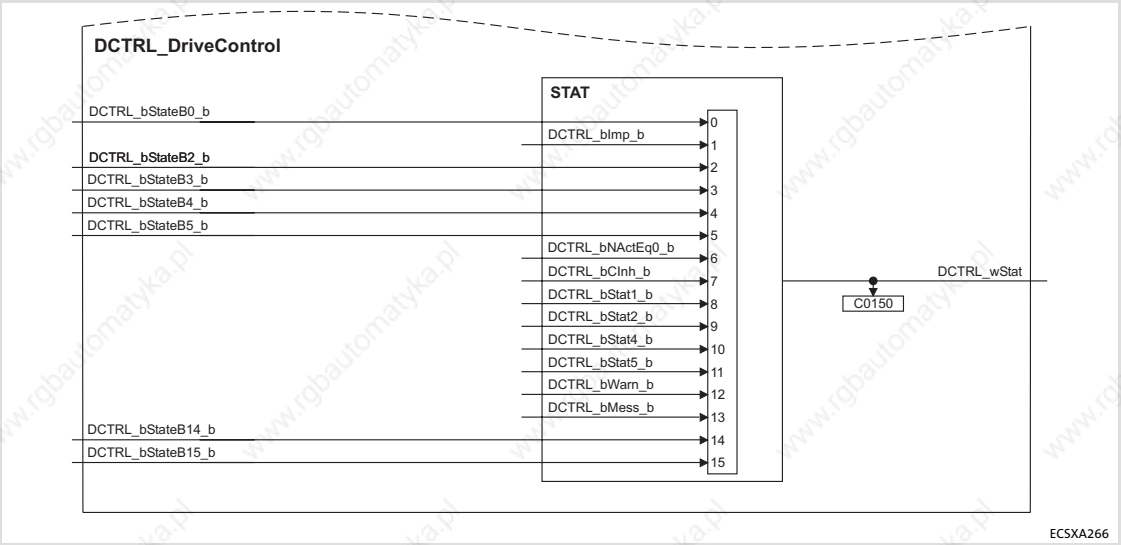

Fig. 13-22 Output of the status word "DCTRL_wStat"

Code		Possible settings			IMPORTANT	
No.	Designation	Lenze/ {Appl.}	Selection			
C0150	Status word	0			DCTRL status word 1 Only display	📖 305
			0 {1} 65535		Controller evaluates information as 16 bits (binary-coded)	
			Bit 0	Not assigned	DCTRL_bStateB0_b	
			Bit 1	Pulse inhibit (IMP)	DCTRL_bImp_b	
			Bit 2	Not assigned	DCTRL_bStateB2_b	
			Bit 3	Not assigned	DCTRL_bStateB3_b	
			Bit 4	Not assigned	DCTRL_bStateB4_b	
			Bit 5	Not assigned	DCTRL_bStateB5_b	
			Bit 6	n = 0	DCTRL_bNActEq0_b	
			Bit 7	Controller inhibit (CINH)	DCTRL_bCInh_b	
			Bit 8	Status code	DCTRL_bStat1_b	
			Bit 9	Status code	DCTRL_bStat2_b	
			Bit 10	Status code	DCTRL_bStat4_b	
			Bit 11	Status code	DCTRL_bStat8_b	
			Bit 12	Warning	DCTRL_bWarn_b	
			Bit 13	Message	DCTRL_bMess_b	
			Bit 14	Not assigned	DCTRL_bStateB14_b	
			Bit 15	Not assigned	DCTRL_bStateB15_b	

System variables

The variables *DCTRL_bStat1_b* ... *DCTRL_bStat5_b* display the status of the drive in a binary coded manner:

DCTRL_bStat5_b	DCTRL_bStat4_b	DCTRL_bStat2_b	DCTRL_bStat1_b	Status
0	0	0	0	Initialisation after connection of the supply voltage
0	0	0	1	Protection against unexpected start-up active (C0142 = 0)
0	0	1	1	Controller is inhibited
0	1	1	0	Controller enabled
0	1	1	1	A ”message” was sent as a monitoring response
1	0	0	0	TRIP was set as a monitoring response

0 = FALSE 1 = TRUE

13.15.9 TRIP status (DCTRL_bExternalFault_b)

If ”TRIP” is activated in the drive (e.g. via the variable *DCTRL_bTripSet_b*, C0135/bit 10 or keypad), the variable *DCTRL_bExternalFault_b* is set to TRUE.

DCTRL_bExternalFault_b is reset to FALSE, as soon as the error source is reset.

13.15.10 Transfer of the status/control word via AIF

If the control and/or status word of the SB **DCTRL_DriveControl** is to be assigned to the SB **Inputs_AIF1/Outputs_AIF1**, this can be realised in the IEC 1131-3 programming language AWL, e. g. as follows:

```
LD DCTRL_wStat
ST AIF1_wDctrlStat     /* Writing the status word*/

LD AIF1_wDctrlCtrl
ST DCTRL_wAIF1Ctrl     /* Writing the control word*/
```

Note!
The assignment of the control/status word bits marked as ”not assigned” depend on the AIF module used and the transfer profile set (e.g. DRIVECOM).

Code		Possible settings			IMPORTANT
No.	Designation	Lenze/ {Appl.}	Selection		
C0135	Control word	0			System control word DCTRL
			0 {1} 65535		Controller evaluates information as 16 bits (binary-coded)
			Bit 0	Not assigned	
			Bit 1	Not assigned	
			Bit 2	Not assigned	
			Bit 3	Quick stop (QSP)	
			Bit 4	Not assigned	
			Bit 5	Not assigned	
			Bit 6	Not assigned	
			Bit 7	Not assigned	
			Bit 8	Operation inhibit (DISABLE)	
			Bit 9	Controller inhibit (CINH)	
			Bit 10	TRIP-SET	
			Bit 11	TRIP-RESET	
			Bit 12	Not assigned	
			Bit 13	Not assigned	
			Bit 14	Not assigned	
			Bit 15	Not assigned	

Code		Possible settings			IMPORTANT	
No.	Designation	Lenze/ {Appl.}	Selection			
C0150	Status word	0			DCTRL status word 1 Only display	📖 305
			0	{1} 65535	Controller evaluates information as 16 bits (binary-coded)	
			Bit 0	Not assigned	DCTRL_bStateB0_b	
			Bit 1	Pulse inhibit (IMP)	DCTRL_bImp_b	
			Bit 2	Not assigned	DCTRL_bStateB2_b	
			Bit 3	Not assigned	DCTRL_bStateB3_b	
			Bit 4	Not assigned	DCTRL_bStateB4_b	
			Bit 5	Not assigned	DCTRL_bStateB5_b	
			Bit 6	n = 0	DCTRL_bNActEq0_b	
			Bit 7	Controller inhibit (CINH)	DCTRL_bCInh_b	
			Bit 8	Status code	DCTRL_bStat1_b	
			Bit 9	Status code	DCTRL_bStat2_b	
			Bit 10	Status code	DCTRL_bStat4_b	
			Bit 11	Status code	DCTRL_bStat8_b	
			Bit 12	Warning	DCTRL_bWarn_b	
			Bit 13	Message	DCTRL_bMess_b	
			Bit 14	Not assigned	DCTRL_bStateB14_b	
			Bit 15	Not assigned	DCTRL_bStateB15_b	

13.16 DFIN_IO_DigitalFrequency (node number 21)

13.16.1 Inputs_DFIN

This SB can convert a power pulse current at the master frequency input X8 into a speed value and scale it. A master frequency can be transferred with high precision without any offset and gain errors.

- ► The master frequency input X8 is designed for signals with TTL level.
- ► The input of a zero track is optional.
- ► A configuration of the master frequency input X8 as output (📖 316) is possible via C0491.
- ► An encoder can be selected and configured via the codes:
  - – C0419 (encoder selection)
  - – C0420 (encoder increments)
  - – C0421 (encoder bias)
  - – C0427 (type of master frequency input signal)

Stop!

The connection X8 cannot be used as a master frequency input if incremental encoders/SinCos encoders are used **and** X8 is configured as a master frequency output.

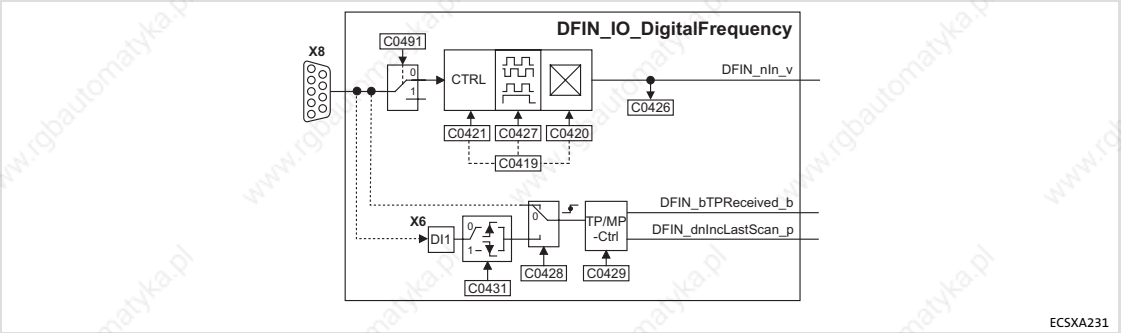

Fig. 13-23 System block "DFIN_IO_DigitalFrequency"

Note!

The process image is newly created for every task the SB is used in.

- ► If therefore *DFIN_nIn_v* is used in several tasks, an individual process image of the SB is created for each of these tasks.
- ► This process is different from the previous process image principle!

System variables

Variable	Data type	Signal type	Address	Display code	Display format	Notes
DFIN_nIn_v	Integer	Velocity	%IW21.0	C0426	dec [rpm]	Value in inc/ms
DFIN_bTPReceived_b	BOOL	Binary	%IX21.1.2	–	–	Touch probe (TP) received
DFIN_dnIncLastScan_p	Double integer	Position	%ID21.1	–	–	Δinc during TP and task start

Codes

Code		Possible settings			IMPORTANT	
No.	Designation	Lenze/ {Appl.}	Selection			
[C0419]	Enc. Setup	110			Encoder selection ● Selection of encoder type indicated on the nameplate of the Lenze motor. ● The encoder data (C0420, C0421, C0427) is set automatically in accordance with the selection.	📖 309 📖 104 📖 110
			0	Common		
			110	IT512-5V	Incremental encoder with TTL level	
			111	IT1024-5V		
			112	IT2048-5V		
			113	IT4096-5V		
			210	IS512-5V	SinCos encoder	
			211	IS1024-5V		
			212	IS2048-5V		
			213	IS4096-5V		
			307	AS64-8V	SinCos absolute value encoder with Hiperface® interface (single-turn) Selections 307, 308, 309 are only possible with operating system 7.0 or higher.	
			308	AS128-8V		
			309	AS256-8V		
			310	AS512-8V		
			311	AS1024-8V		
			407	AM64-8V	SinCos absolute value encoder with Hiperface® interface (multi-turn) Selections 407, 408, 409 are only possible with operating system 7.0 or higher.	
			408	AM128-8V		
			409	AM256-8V		
			410	AM512-8V		
			411	AM1024-8V		
[C0420]	Encoder const.	512			Number of increments of the encoder	📖 309 📖 104 📖 110
			1 {1 inc/rev} 8192		Sets C0419 = 0 (”common”) if the value is altered.	

Code		Possible settings			IMPORTANT	
No.	Designation	Lenze/ {Appl.}	Selection			
[C0421]	Encoder volt	0			Encoder voltage	📖 309
			0	5.0 V	Sets C0419 = 0 (”common”) if the value is altered.	📖 104 📖 110
			1	5.6 V		
			2	6.3 V		
			3	6.9 V		
			4	7.5 V		
			5	8.1 V		
C0426	DIS: In				Signal at DFIN input Only display	📖 309
			-32767	{1 rpm} 32767		
[C0427]	Enc. signal	0			Function of the master frequency input signals on X8 (DFIN)	📖 309 📖 104 📖 110
			0	2-phase		
			1	A: speed B: direction		
			2	A or B: speed or direction		
C0428	DFIN TP sel.	0			DFIN touch probe signal source	📖 313 📖 309
			0	Zero pulse of position encoder (C0490)	X7/X8	
			1	Touch probe input TP1	X6/DI1	
			2	Zero pulse of digital frequency input	X8	
C0429	TP1 delay	0			DFIN dead time compensation TP1 (DI1)	📖 313 📖 309
			-32767	{1 inc} 32767		
C0431	DFIN TP Edge	0			DFIN touch probe TP1 edge (for touch probe via digital input X6/DI1 (C0428 = 1))	📖 313
			0	Rising edge TP1		
			1	Falling edge TP1		
			2	Rising and falling edge TP1		
			3	Switched off		
[C0491]	X8 in/out	0			Function of X8	📖 309 📖 104 📖 110
			0	X8 is input		
			1	X8 is output		

13.16.1.1 Configuration master frequency input signal

You configure the type of the master frequency input signal via C0427:

C0427 = 0 (2 phases)			
	Track	**CW rotation**	**CCW rotation**
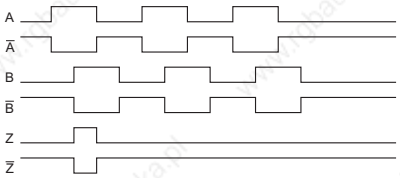 Signal sequence with phase shift (CW rotation)	**A**	Track A leads by 90° (*DFIN_nIn_v* = positive value)	Track A lags by 90° (*DFIN_nIn_v* = negative value)
	B	–	–

C0427 = 1 (A = speed / B = direction)			
	Track	**CW rotation**	**CCW rotation**
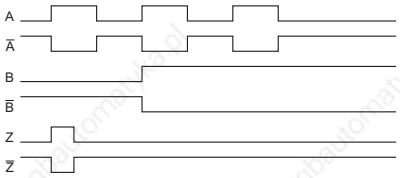 Control of the direction of rotation via track B	**A**	Transmits the speed.	Transmits the speed
	B	= FALSE (*DFIN_nIn_v* = positive value)	= TRUE (*DFIN_nIn_v* = negative value)

C0427 = 2 (A or B = speed or direction)			
	Track	**CW rotation**	**CCW rotation**
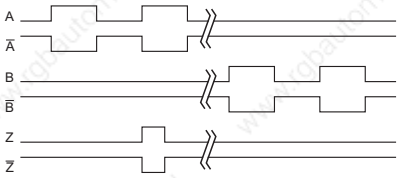 Control of speed and direction of rotation via track A or track B	**A**	Transmits speed and direction of rotation (*DFIN_nIn_v* = positive value)	= FALSE
	B	= FALSE	Transmits speed and direction of rotation (*DFIN_nIn_v* = negative value)

Transfer function

$$DFIN\_nIn\_v = f\,[Hz] \cdot \frac{60}{Number\ of\ incr.\ from\ C0420} \cdot \frac{2^{14}}{15000}$$

Example:

- ► Input frequency = 200 kHz
- ► C0420 = 2048

$$DFIN\_nIn\_v\,[rpm] = 200000\ Hz \cdot \frac{60}{2048} = 5859\ rpm$$

Signal setting

Finer resolutions can be realised by a downstream function block (e.g. **L_CONV** from the **LenzeDrive.lib**) function library:

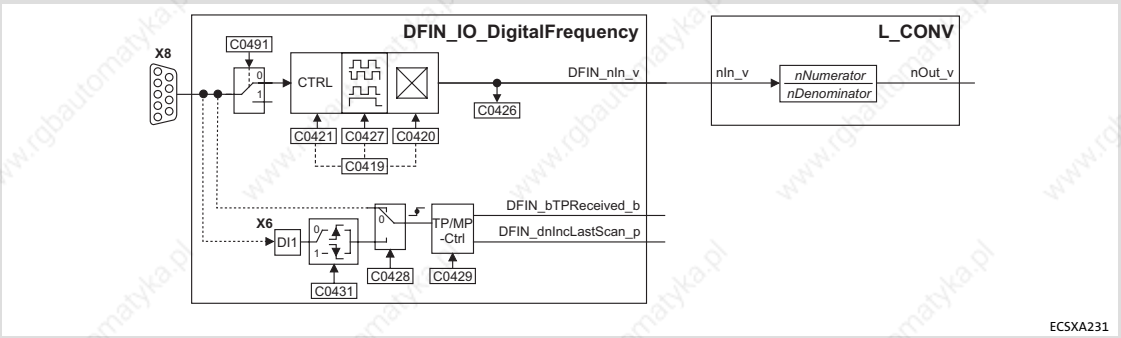

Fig. 13-24 SB "DFIN_IO_DigitalFrequency" with downstream FB "L_CONV" for the scaling

$$nOut\_v = f\,[Hz] \cdot \frac{60}{Number\_of\_incr.\_from\ C0420} \cdot \frac{nNumerator}{nDenominator} \cdot \frac{2^{17}}{15000}$$

13.16.1.2 Configurating touch probe

Process

If an edge change on the input actuating a TP (e. g. X6/DI1) occurs, the instantaneous phase value (master frequency input value) is stored in the operating system by means of a very fast interrupt.

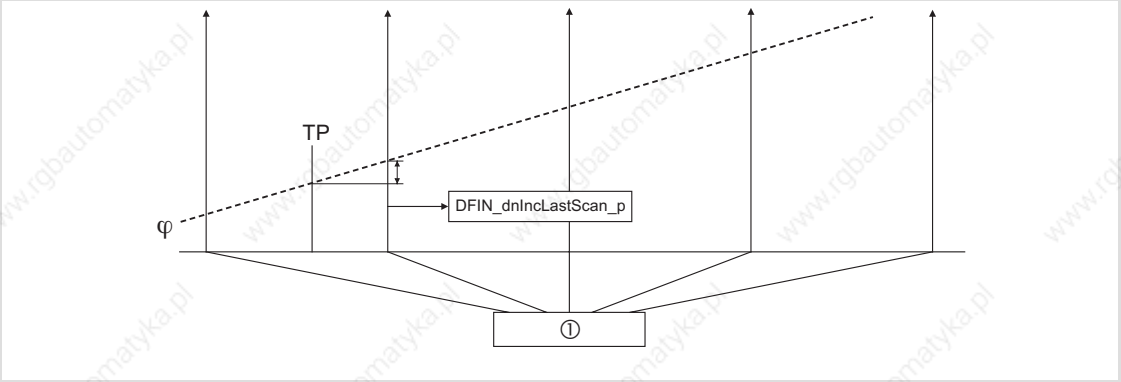

Fig. 13-25 Function diagram of a Touch Probe (TP)

① Time-equidistant start of an interval task

ϑ Phase-angle signal

Codes

Code		Possible settings			IMPORTANT	
No.	Designation	Lenze/ {Appl.}	Selection			
C0428	DFIN TP sel.	0			DFIN touch probe signal source	📖 313 📖 309
			0	Zero pulse of position encoder (C0490)	X7/X8	
			1	Touch probe input TP1	X6/DI1	
			2	Zero pulse of digital frequency input	X8	
C0429	TP1 delay	0			DFIN dead time compensation TP1 (DI1)	📖 313 📖 309
			-32767	{1 inc} 32767		
C0431	DFIN TP Edge	0			DFIN touch probe TP1 edge (for touch probe via digital input X6/DI1 (C0428 = 1))	📖 313
			0	Rising edge TP1		
			1	Falling edge TP1		
			2	Rising and falling edge TP1		
			3	Switched off		

Function sequence

1. The TP is activated in an edge-controlled manner via the digital input X6/DI1 or via a zero pulse (only if encoder is connected).
2. If a TP has occurred, *DFIN_bTPReceived_b* is set = TRUE.
3. After the start of the task, *DFIN_dnIncLastScan_p* indicates the number of increments [inc] counted since the TP.
4. Following, *DFIN_bTPReceived_b* = FALSE is set.

Note!

- ► It is necessary that all three outputs (*DFIN_nIn_v*, *DFIN_bTPReceived_b* and *DFIN_dnIncLastScan_p*) are processed in the task even if just one signal is required.
- ► The polarity of the digital input X6/DI1 configured via C0114/1 does not have an influence on the edge evaluation.

DFIN_nIn_v

► The value *DFIN_nIn_v* is scaled to increments per millisecond [inc/ms].
  – (INT) 16384 corresponds to 15000 rpm. See chapter ”Signal types and scaling” (📖 24).

► For every task in which *DFIN_nIn_v* is used, the operating system creates an individual integrator that is reset after every start of the task (task-internal process image).

► For reliable TP generation, *DFIN_nIn_v* must not be used in the PLC_PRG.

Example: *DFIN_nIn_v* in a 10 ms task:

► When the 10 ms task starts, the value of the integrator is stored in a local area of the task and the integrator is reset. The value in the local area gives an average value in increments per 1 ms.

► If a position value is to be calculated from the average value, the average value has to be multiplied by (*SYSTEM_nTaskInterval* / 4) in order to obtain increments per 10 ms.
  – At a task of 10 ms, the value of *SYSTEM_nTaskInterval* is ’40’ (40 × 0.25 ms = 10 ms).
  – See also chapter ”SYSTEM_FLAGS (system flags)” (📖 348).

► The Lenze function blocks already implement this procedure.

13.17 DFOUT_IO_DigitalFrequency (node number 22)

13.17.1 Inputs_DFOUT / Outputs_DFOUT

This SB converts internal speed signals into frequency signals and outputs them to X8 (configuration via C0491).

- ► Transmission is effected with high precision (without offset and amplification faults) including remainder considered.
- ► The type of output signals can be set via C0540.
- ► A configuration of the master frequency output X8 as input (📖 309) is possible via C0491.

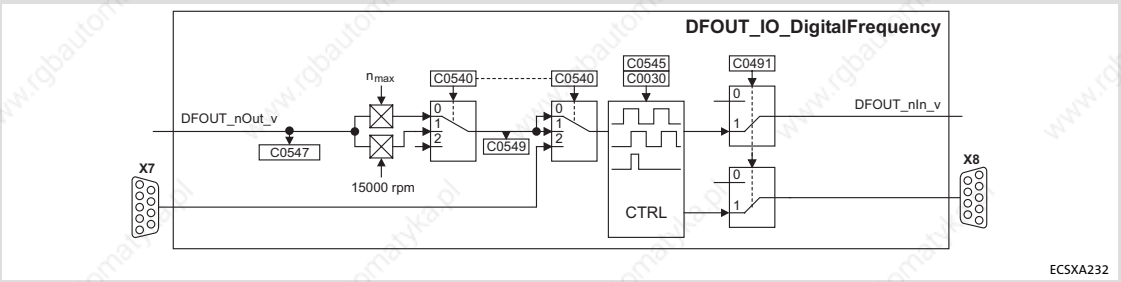

Fig. 13-26 System block "DFOUT_IO_DigitalFrequency"

Note!

The process image is recreated for every task the SB is used in.

- ► If therefore *DFOUT_nIn_v* and *DFOUT_nOut_v* are used in several tasks, an individual process image of the SB is created for each of these tasks.
- ► This process is different from the previous process image principle!

System variables

Variable	Data type	Signal type	Address	Display code	Display format	Notes
DFOUT_nOut_v	Integer	Velocity	%QW22.0	C0547	dec [%]	
				C0549	dec [rpm]	
DFOUT_nIn_v	Integer	Velocity	%IW22.0	–	–	

Codes

Code		Possible settings				IMPORTANT	
No.	Designation	Lenze/ {Appl.}	Selection				
C0030	DFOUT const	3				Constant for digital frequency output DFOUT_nOut_v on X8 in increments per revolution.	📖 318 📖 104 📖 110
			0	256 inc/rev			
			1	512 inc/rev			
			2	1024 inc/rev			
			3	2048 inc/rev			
			4	4096 inc/rev			
			5	8192 inc/rev			
			6	16384 inc/rev			
[C0491]	X8 in/out	0				Function of X8	📖 309 📖 104 📖 110
			0	X8 is input			
			1	X8 is output			
[C0540]	X8 Signal out	2				Function of the digital frequency output signals on X8 (DFOUT)	📖 101
			0	DFOUT in [%]			
			1	DFOUT in [rpm]			
			2	Encoder simulation + zero pulse → DFOUT			
C0545	PH offset	0				Phase offset	📖 318
			0	{1 inc}	65535	1 revolution = 65535 increments	
C0547	DIS: AN-IN					Analog signal on the input of the DFOUT block Read only	📖 318
			-199.99	{0.00 %}	199.99		
C0549	DIS: DF-IN					Speed on the input of the DFOUT block Only display	📖 318
			-32767	{1 rpm}	32767		

13.17.1.1 Configure encoder constant

Via C0030 you configure the encoder constant:

Code		Possible settings		IMPORTANT	
No.	Designation	Lenze/ {Appl.}	Selection		
C0030	DFOUT const	3		Constant for digital frequency output DFOUT_nOut_v on X8 in increments per revolution.	📖 318 📖 104 📖 110
			0 256 inc/rev		
			1 512 inc/rev		
			2 1024 inc/rev		
			3 2048 inc/rev		
			4 4096 inc/rev		
			5 8192 inc/rev		
			6 16384 inc/rev		

13.17.1.2 Configuration master frequency output signal

You configure the type of the master frequency output signal via C0540:

C0540 = 0	Output of an analog signal
Function	The input signal *DFOUT_nOut_v*is interpreted as an analog signal [%] and is output as a frequency signal on the master frequency output X8.
Scaling	100 % ≡ (INT)16384 ≡ C0011 (n_{max})
Transmission function	$f\,[Hz] = DFOUT\_nOut\_v\,[\%] \cdot \frac{C0030}{100} \cdot \frac{C0011\,(n_{max})}{60}$ $DFOUT\_nIn\_v = f\,[Hz] \cdot \frac{60}{C0030} \cdot \frac{2^{14}}{15000}$
Example	• *DFOUT_nOut_v* = 50 % • C0030 = 3, this corresponds to a number of increments of 2048 increments/revolution • C0011 = 3000 rpm $f\,[Hz] = 50\,\% \cdot \frac{2048}{100} \cdot \frac{3000}{60} = 51200\,Hz$
C0540 = 1	**Output of a speed signal**
Function	The input signal *DFOUT_nOut_v*is interpreted as a speed signal [rpm] and is output as a frequency signal on the master frequency output X8.
Scaling	15000 rpm ≡ (INT)16384
Transmission function	$f\,[Hz] = DFOUT\_nOut\_v\,[rpm] \cdot \frac{C0030}{60}$
Example	• *DFOUT_nOut_v* = 3000 rpm • C0030 = 3, this corresponds to a number of increments of 2048 increments/revolution $f\,[Hz] = 3000\,rpm \cdot \frac{2048}{60} = 102400\,Hz$
C0540 = 2	**Encoder simulation of the resolver with zero track in resolver position**
Function	• The function is used if a resolver is connected to X7. • The encoder constant for output X8 is set in C0030. • The output of the zero pulse with reference to the rotor depends on how the resolver is mounted to the motor. • The zero pulse can be shifted by +360 ° via C0545 (65536 inc = 360 °).

Note!

The zero pulse can only be output with C0540 = 2 (encoder simulation of resolver).

Phase-displaced signal sequence	Track	CW rotation	CCW rotation
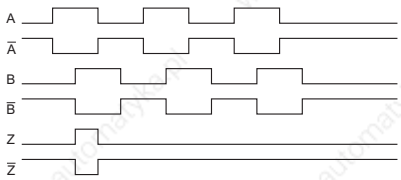 CW rotation	**A**	If the input values are positive, track A leads by 90º.	If the input values are negative, track A lags by 90º.
	B	–	–

► The output signal corresponds to the message of an incremental encoder:
  – Track A, B and, if selected, zero track as well as the corresponding inverted tracks are output with tracks shifted by 90 degrees.
  – The levels are TTL compatible.

► The zero track is output in accordance with the function set in C0540.

Note!

The digital frequency output X8 has a system-dependent delay time:

► T_d = task cycle time (process image cycle) - 1 ms

Example:

If *DFOUT_nOut_v* is described in a ”10 ms task”, the signal on X8 has a delay time T_d of 9 ms (10 ms - 1 ms)

13.18 DIGITAL_IO (node number 1)

13.18.1 Inputs_DIGITAL (digital inputs)

This SB reads and conditions the signals on X6/DI1 ... DI4.

- ► The configuration of the terminal polarity for the inputs X6/DI1 ... DI4 is effected via C0114.
- ► The safety function "safe torque off" (former "safe standstill") is activated via X6/SI1 and X6/SI2.

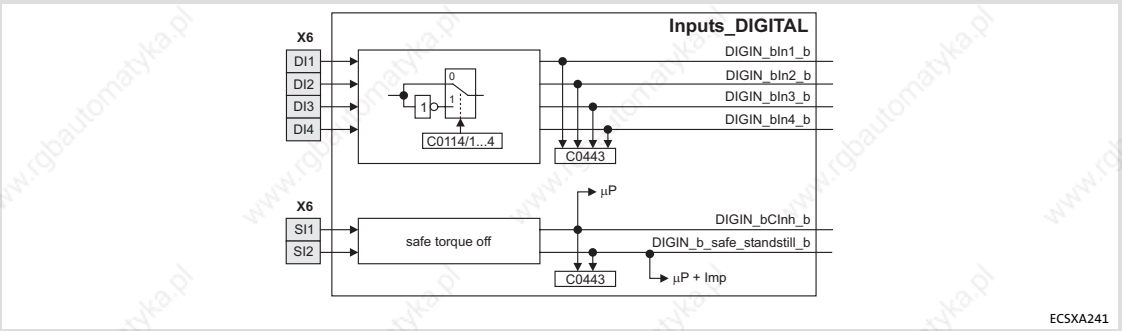

Fig. 13-27 System block "Inputs_DIGITAL"

System variables

Variable	Data type	Signal type	Address	Display code	Display format	Notes
DIGIN_bCInh_b	BOOL	binary	%IX1.0.0	–	–	Controller inhibit – takes direct effect on the device control DCTRL.
DIGIN_bIn1_b			%IX1.0.1	C0443	bin	
DIGIN_bIn2_b			%IX1.0.2			
DIGIN_bIn3_b			%IX1.0.3			
DIGIN_bIn4_b			%IX1.0.4			
DIGIN_b_safe_standstill_b			%IX1.0.5			"Safe torque off" (former "safe standstill")

Codes

Code		Possible settings		IMPORTANT	
No.	Designation	Lenze/ {Appl.}	Selection		
C0114				Polarity of the digital inputs	📖 118
1	DIGIN pol	0	HIGH level active	X6/DI1 (DIGIN_bIn1_b)	
2	DIGIN pol	0	HIGH level active	X6/DI2 (DIGIN_bIn2_b)	
3	DIGIN pol	0	HIGH level active	X6/DI3 (DIGIN_bIn3_b)	
4	DIGIN pol	0	HIGH level active	X6/DI4 (DIGIN_bIn4_b)	
			0 HIGH level active		
			1 LOW level active		

Code		Possible settings			IMPORTANT	
No.	Designation	Lenze/ {Appl.}	Selection			
C0443	DIS: DIGIN				Signal status of the digital inputs on X6 after consideration of the polarity set under C0114. Only display	📖 321
			0	{1} 255		
			Bit 0	DIGIN1	X6/DI1	
			Bit 1	DIGIN2	X6/DI2	
			Bit 2	DIGIN3	X6/DI3	
			Bit 3	DIGIN4	X6/DI4	
			Bit 4	DIGIN_safe_standstill	X6/SI2 0: Pulse inhibit is active 1: Pulse inhibit is inactive	📖 69
			Bit 5	Free		
			Bit 6	DIGIN_CInh	X6/SI1 0: Controller is inhibited (CINH) 1: Controller is enabled	📖 69
			Bit 7	Free		

Terminal assignment

Terminal	Function		
X6	**Digital inputs**		
X6/DI1	Digital input 1 (DigIn_bIn1_b)		freely assignable
X6/DI2	Digital input 2 (DigIn_bIn2_b)		
X6/DI3	Digital input 3 (DigIn_bIn3_b)		
X6/DI4	Digital input 4 (DigIn_bIn4_b)		
X6	**Connection of "Safe torque off"(📖 69)**		
X6/SI1	Input 1	LOW	DIGIN_bCInh_b = TRUE
		HIGH	DIGIN_bCInh_b = FALSE
X6/SI2	Input 2	LOW	DIGIN_b_safe_standstill_b = FALSE
		HIGH	DIGIN_b_safe_standstill_b = TRUE
X6/S24	Low-voltage supply		

13.18.2 Outputs_DIGITAL (digital outputs)

This SB conditions the digital signal *DIGOUT_bOut1_b* and outputs it via X6/DO1.

- ► A motor holding brake supplied with low voltage via X6/B+ and X6/B- can be connected to X25/B1 and X25/B2:
  - – The motor holding brake can be switched by the signal *DIGOUT_bRelais_b*.
  - – The terminal polarity for the outputs X6/DO1, X25/B1 and X25/B2 can be configured via C0118.
- ► X6/SO serves to the feedback of the safety function ”safe torque off” (former ”safe standstill”).

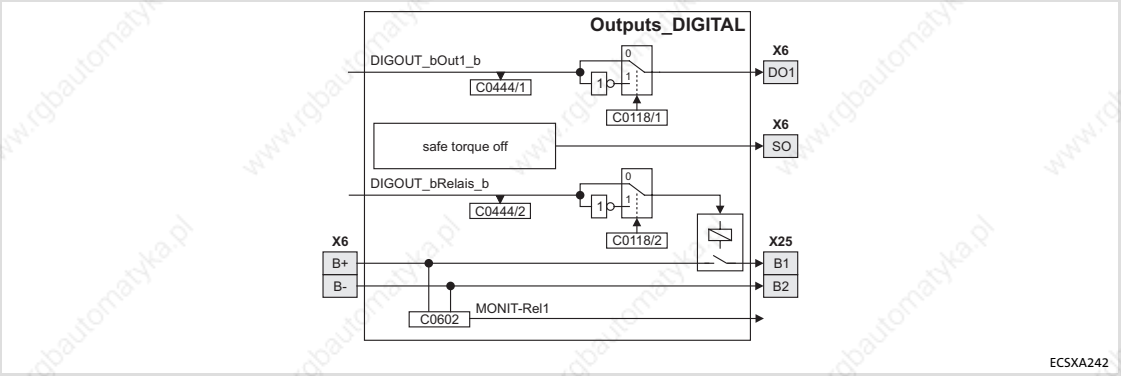

Fig. 13-28 System block ”Outputs_DIGITAL”

System variables

Variable	Data type	Signal type	Address	Display code	Display format	Notes
DIGOUT_bOut1_b	BOOL	Binary	%QX1.0.0	C0444/1	bin	
DIGOUT_bRelais_b			%QX1.0.1	C0444/2		Feedback ”safe torque off” (former ”safe standstill”)

Codes

Code		Possible settings		IMPORTANT	
No.	Designation	Lenze/ {Appl.}	Selection		
C0118				Polarity of the digital outputs	📖 323
1	DIGOUT pol	0	HIGH level active	X6/DO1 (DIGOUT_bOut1_b)	📖 118
2	DIGOUT pol	0	HIGH level active	X25 (DIGOUT_bRelais_b, brake connection)	
			0 HIGH level active		
			1 LOW level active		
C0444				Status of the digital outputs Only display	📖 323
1	DIS: DIGOUT		0 1	Status of the digital output X6/DO1	
2	DIS: DIGOUT			Relay control status	
C0602	MONIT REL1	3		Configuration of the open circuit monitoring of relay output X25	
			0 TRIP		
			3 Off		

Terminal assignment

Digital inputs	Function			Electrical data
X6	**Digital output**			24 V DC 0.7 A (max. 1.4 A) short-circuit-proof
X6/DO1	Digital output 1			
X6	**Output ”safe torque off” (former ”safe standstill”)**			
X6/SO	Output feedback	LOW	During operation	
		HIGH	”Safe torque off” (former ”safe standstill”) active	
X25	**Connection motor holding brake**			23 ... 30 V DC; max. 1.5 A **Set the brake voltage so that the permissible voltage at the brake will not be exceeded or the values do not fall below the threshold!**
X25/B1	Brake connection +			
X25/B2	Brake connection -			
X6	**Low-voltage supply motor holding brake**			
X6/B+	Brake supply +			
X6/B-	Brake supply -			

13.19 FCODE_FreeCode (node number 141)

At Lenze, drive parameters are called codes. By changing the code values, the controller can be adapted to the corresponding application without any additional programming effort.

This SB provides different variables. The variables can be directly read out by means of the assigned ”free” codes of the ECSxA... axis module and can be processed in the PLC program.

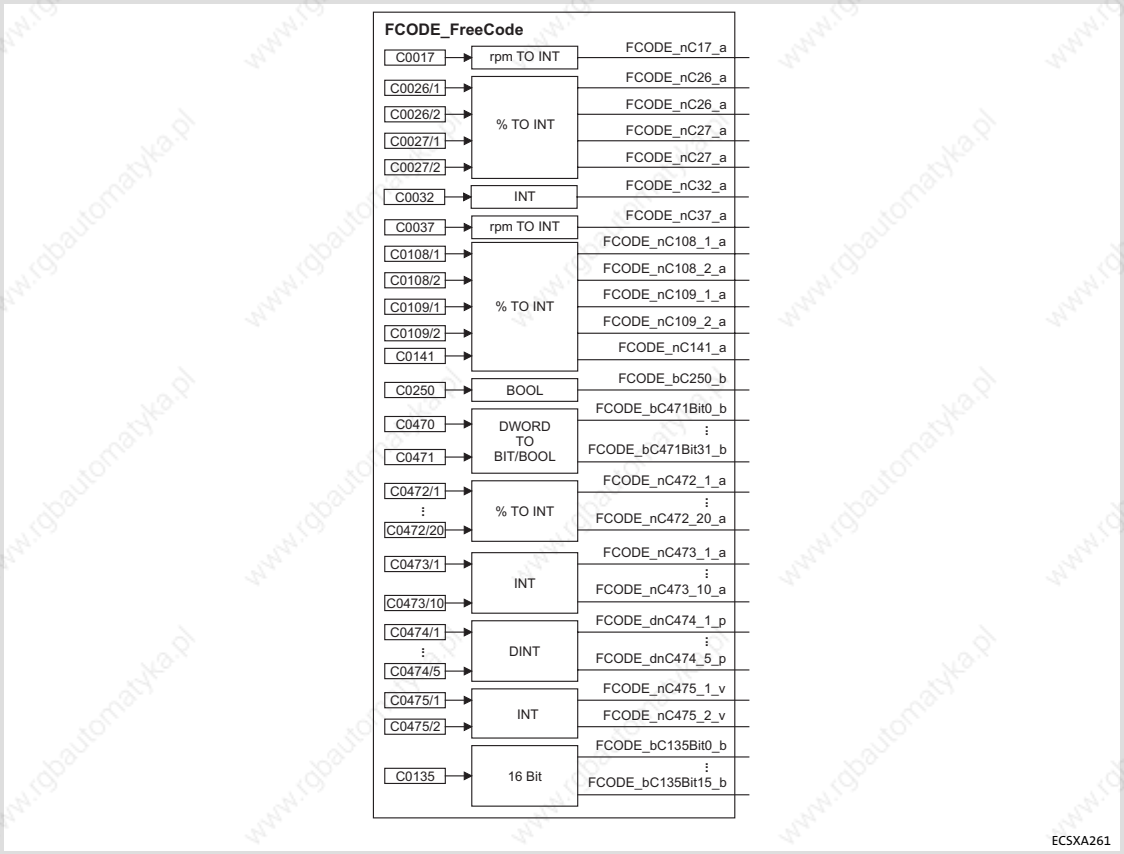

Fig. 13-29 System block ”FCODE_FreeCode”

Note!

- ► The code C0032 only is available as of software version 7.0.
- ► The free code C0470 is placed on the same memory address as the code C0471. C0470 can be read out via the variables assigned to the C0471 *FCODE_bC0471Bit0_b* ... *FCODE_bC0471Bit31_b*.

  In contrast to code C0471, which can accept a 32-bit value, code C0470 is divided into four subcodes with 8 bits each.

► The values in the codes ( ) of the SB are assigned to the respective variables.

► The code value is converted into a variable value via a fixed scaling routine.

Example:

It is possible to enter a percentage [%] (e. g. by means of the keypad) to code C0472/1 of the ECSxA... axis module. The value is directly assigned to the variable *FCODE_nC0472_1_a* (data type ”integer”) and can be further processed in the PLC program.

System variables

Variable	Data type	Signal type	Address	Display code	Display format	Notes
FCODE_nC17_a	Integer	analog	%IW141.0	–	–	default = 50 rpm
FCODE_nC26_1_a			%IW141.2			default = 0.00 %
FCODE_nC26_2_a			%IW141.3			default = 0.00 %
FCODE_nC27_1_a			%IW141.4			default = 100.00 %
FCODE_nC27_2_a			%IW141.5			default = 100.00 %
FCODE_nC32_a			%IW141.6			default = 1
FCODE_nC37_a			%IW141.7			default = 0 rpm
FCODE_nC108_1_a			%IW141.8			default = 100.00 %
FCODE_nC108_2_a			%IW141.9			default = 100.00 %
FCODE_nC109_1_a			%IW141.10			default = 0.00 %
FCODE_nC109_2_a			%IW141.11			default = 0.00 %
FCODE_nC141_a			%IW141.12			default = 0.00 %
FCODE_bC250_b	BOOL	binary	%IX141.13.0	–	–	default = 0
FCODE_bC471Bit**0**_b ... FCODE_bC471Bit**15**_b	BOOL	binary	%IX141.14.**0** ... %IX141.14.**15**	–	–	default = 0
FCODE_bC471Bit**16**_b ... FCODE_bC471Bit**31**_b			%IX141.15.**0** ... %IX141.15.**15**			
FCODE_nC472_**1**_a ... FCODE_nC472_**20**_a	Integer	analog	%IW141.**16** ... %IW141.**35**	–	–	default = 0.00 % C0472/3 = 100.00 %
FCODE_nC473_**1**_a ... FCODE_nC473_**10**_a	Integer	analog	%IW141.**36** ... %IW141.**45**	–	–	default = 0 C0473/1,2 = 1
FCODE_dnC474_**1**_p ... FCODE_dnC474_**5**_p	Double integer	Position	%ID141.**23** ... %ID141.**27**	–	–	default = 0
FCODE_nC475_1_v	Integer	velocity	%IW141.56	–	–	default = 0
FCODE_nC475_2_v			%IW141.57			
FCODE_bC135Bit**0**_b ... FCODE_bC135Bit**15**_b	BOOL	binary	%IX141.58.**0** ... %IX141.58.**15**	–	–	default = 0

Codes

Code		Possible settings				IMPORTANT	
No.	Designation	Lenze/ {Appl.}	Selection				
C0017	FCODE (QMIN)	50				Used for speed signals	📖 325
			-16000	{1 rpm}	16000		
C0026						Offset for relative analog signals (AIN)	📖 251 📖 325
1	FCODE(offset)	0.0	-199.99	{0.01 %}	199.99	FCODE_nC26_1_a	
2	FCODE(offset)	0.0				FCODE_nC26_2_a	
C0027						Gain for relative analog signals (AIN)	📖 251 📖 325
1	FCODE(gain)	100.0	-199.99	{0.01 %}	199.99	FCODE_nC27_1_a	
2	FCODE(gain)	100.0				FCODE_nC27_2_a	

Code		Possible settings				IMPORTANT	
No.	Designation	Lenze/ {Appl.}	Selection				
C0032	FCODE gearbox	1				Freely configurable code for absolute analog signals ● FCODE_nC32_a (gearbox factor numerator)	📖 325
			-32767	{1}	32767		
C0037	Set-value rpm	0				FCODE_nC37_a setpoint selection in rpm	📖 325
			-16000	{1 rpm}	16000		
C0108						Gain for relative analog signals (AOUT)	📖 325
1	FCODE(gain)	100.0	-199.99	{0.01 %}	199.99	FCODE_nC108_1_a	
2	FCODE(gain)	100.0				FCODE_nC108_2_a	
C0109						Offset for relative analog signals (AOUT)	📖 325
1	FCODE(offset)	0.0	-199.99	{0.01 %}	199.99	FCODE_nC109_1_a	
2	FCODE(offset)	0.0				FCODE_nC109_2_a	
C0135	Control word	0				System control word DCTRL	
			0	{1}	65535	Controller evaluates information as 16 bits (binary-coded)	
			Bit 0	Not assigned			
			Bit 1	Not assigned			
			Bit 2	Not assigned			
			Bit 3	Quick stop (QSP)			
			Bit 4	Not assigned			
			Bit 5	Not assigned			
			Bit 6	Not assigned			
			Bit 7	Not assigned			
			Bit 8	Operation inhibit (DISABLE)			
			Bit 9	Controller inhibit (CINH)			
			Bit 10	TRIP-SET			
			Bit 11	TRIP-RESET			
			Bit 12	Not assigned			
			Bit 13	Not assigned			
			Bit 14	Not assigned			
			Bit 15	Not assigned			
C0141	FCODE(setval)	0.0				Main setpoint (FCODE_C141_a)	📖 325
			-199.99	{0.01 %}	199.99		
C0250	FCODE 1 Bit	0				Freely selectable digital signal (1 bit)	📖 325
			0		1		
C0470						Freely configurable code for digital signals Hexadecimal value is bit-coded.	📖 325
1	FCODE 8bit	0	00	{hex}	FF	C0470/1 = C0471, bit 0 ... 7	
2	FCODE 8bit	0				C0470/2 = C0471, bit 8 ... 15	
3	FCODE 8bit	0				C0470/3 = C0471, bit 16 ... 23	
4	FCODE 8bit	0				C0470/4 = C0471, bit 24 ... 31	

Code		Possible settings				IMPORTANT	
No.	Designation	Lenze/ {Appl.}	Selection				
C0471	FCODE 32bit	0				Hexadecimal 32-bit interpretation of C0470	📖 325
			0	{1}	4294967295		
C0472	FCODE analog					Freely configurable code for relative analog signals	📖 325
1		0.0	-199.99	{0.01 %}	199.99	FCODE_bC472_1_a	
2		0.0				FCODE_bC472_2_a	
3		100.0				FCODE_bC472_3_a	
4		0.0				FCODE_bC472_4_a	
...		...				...	
20		0.0				FCODE_bC472_20_a	
C0473						Freely configurable code for absolute analog signals	📖 325
1	FCODE abs	1	-32767	{1}	32767		
2	FCODE abs	1					
3	FCODE abs	0					
...	...	...					
10	FCODE abs	0					
C0474						Freely configurable code for phase signals	📖 325
1	FCODE PH	0	-2147483647	{1}	2147483647		
...	...	...					
5	FCODE PH	0					
C0475						Freely configurable code for phase difference signals	📖 325
1	FCODE DF	0	-16000	{1 rpm}	16000		
2	FCODE DF	0					

13.20 MCTRL_MotorControl (node number 131)

This SB contains the control of the driving machine. It consists of the phase controller, speed controller, and the motor control.

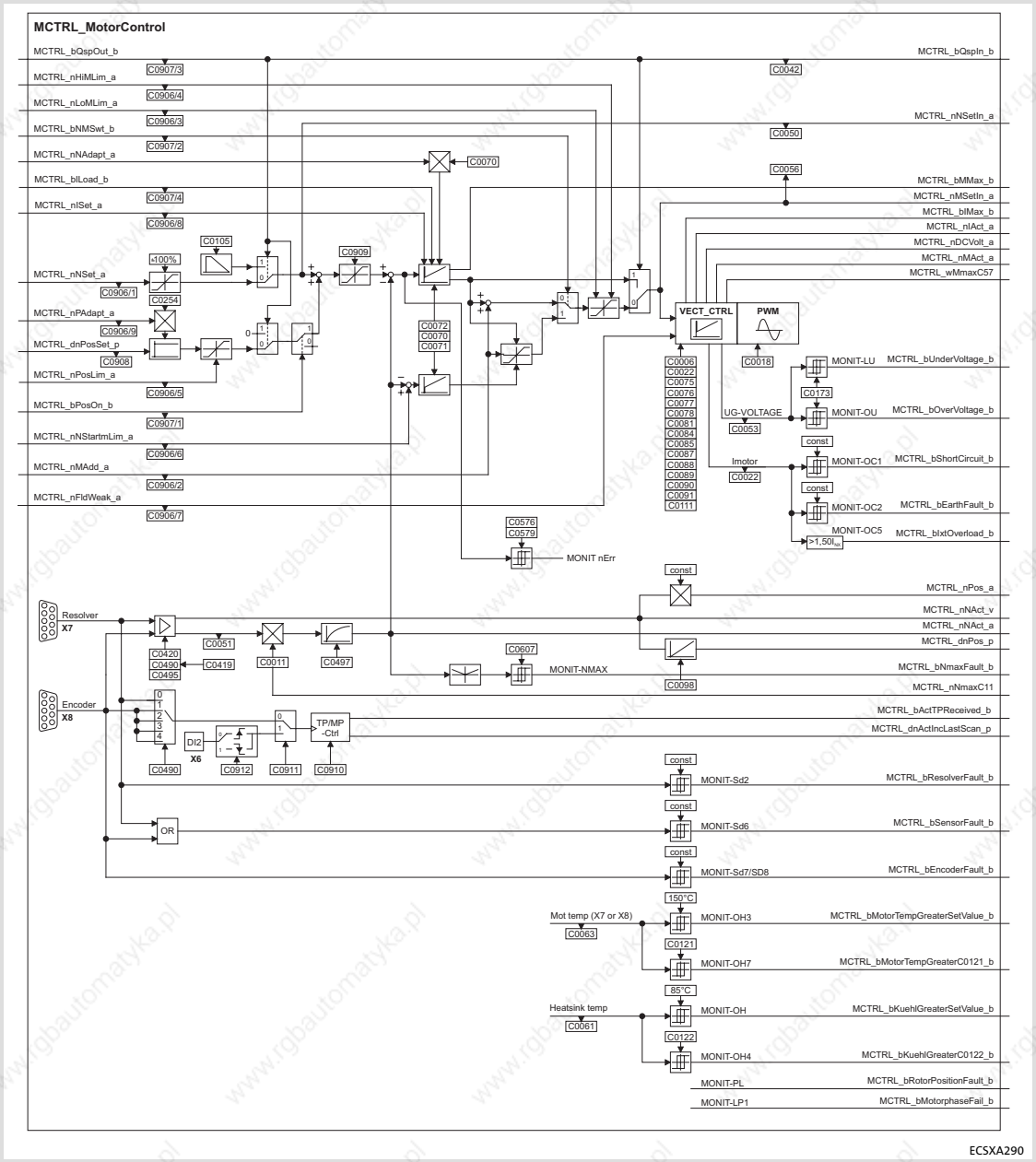

Fig. 13-30 System block "MCTRL_MotorControl"

Note!

The process image is established in the course of a fixed system task (interval: 1 ms).

Exception: *MCTRL_bActTPReceived_b*, *MCTRL_dnActIncLastScan_p* and *MCTRL_nNAct_v* respectively are read in the process input image of the task in which they are used.

13.20.1 Inputs_MCTRL

System variables

Variable	Data type	Signal type	Address	Display code	Display format	Comments
MCTRL_bQspIn_b	BOOL	binary	%IX131.0.0.0	C0042	bin	TRUE = drive carries out quick stop (QSP)
MCTRL_nNSetIn_a	integer	analog	%IW131.1	C0050	dec [%]	Speed setpoint ● 16384 ≡ 100 % n_{max} (C0011)
MCTRL_bMMax_b	BOOL	binary	%IX131.0.2	–	–	TRUE = speed controller operates in limitation
MCTRL_nMSetIn_a	integer	analog	%IW131.3	C0056	dec [%]	Torque setpoint ● 16384 ≡ 100 % M_{max} (C0057)
MCTRL_bIMax_b	BOOL	binary	%IX131.0.1	–	–	TRUE = drive operates at limit C0022
MCTRL_nIAct_a	integer	analog	%IW131.5	–	–	Actual motor current ● 16384 ≡ 100 % I_{max} (C0022)
MCTRL_nDCVolt_a			%IW131.6			DC voltage ● 16384 ≡ 1000 V
MCTRL_nMAct_a			%IW131.4			Current torque ● 16384 ≡ 100 % M_{max} (C0057)
MCTRL_wMmaxC57	Word	–	%IW131.16	–	–	Display of maximum torque (C0057) x 10
MCTRL_bUnderVoltage_b	BOOL	binary	%IX131.0.3	–	–	Monit: undervoltage
MCTRL_bOverVoltage_b			%IX131.0.4			Monit: overvoltage
MCTRL_bShortCircuit_b			%IX131.0.5			Monit: short circuit
MCTRL_bEarthFault_b			%IX131.0.6			Monit: earth fault
MCTRL_bIxtOverload_b			%IX131.9.2			Monit: I x t - overload
MCTRL_nPos_a	integer	analog	%IW131.7	–	–	Actual phase value as analog signal ● 90° ≡ 100%
MCTRL_nNAct_v	integer	Velocity	%IW131.8	–	–	Actual speed value [inc/ms]
MCTRL_nNAct_a	integer	analog	%IW131.2	–	–	Actual speed value ● 16384 ≡ 100 % n_{max} (C0011)
MCTRL_dnPos_p	double integer	position	%ID131.5	–	–	Rotor position of the motor
MCTRL_bNmaxFault_b	BOOL	binary	%IX131.0.7	–	–	Monit: max. system speed exceeded
MCTRL_nNmaxC11	integer	–	%IW131.15	–	–	Display of max. speed (C0011)
MCTRL_bActTPReceived_b	BOOL	binary	%IX131.0.10	–	–	Receive touch probe (TP)
MCTRL_dnActIncLastScan_p	double integer	position	%ID131.6	–	–	Δinc during TP and task start

Variable	Data type	Signal type	Address	Display code	Display format	Comments
MCTRL_bResolverFault_b	BOOL	binary	%IX131.0.8	–	–	Monit: resolver error
MCTRL_bEncoderFault_b			%IX131.9.1			Monit: Encoder error
MCTRL_bSensorFault_b			%IX131.9.0			Monit: Thermal sensor error
MCTRL_bMotorTempGreaterSetValue_b			%IX131.0.11			Monit: Motor temperature > 150 °C
MCTRL_bMotorTempGreaterC0121_b			%IX131.0.12			Monit: Motor temperature > C0121
MCTRL_bKuehlGreaterSetValue_b			%IX131.0.14			Monit: Heatsink temperature > 85 °C
MCTRL_bKuehlGreaterC0122_b			%IX131.0.15			Monit: Heatsink temperature > C0122
MCTRL_bRotorPositionFault_b			%IX131.9.3			Monit: Error during rotor position adjustment
MCTRL_bMotorphaseFail_b			%IX131.9.4			Monit: Failure of a motor phase

13.20.2 Outputs_MCTRL

System variables

Variable	Data type	Signal type	Address	Display code	Display format	Comments
MCTRL_bQspOut_b	BOOL	binary	%QX131.0.0	C0907/3	bin	TRUE = drive carries out quick stop (QSP)
MCTRL_nHiMLim_a	integer	analog	%QW131.4	C0906/4	dec [%]	Upper torque limitation ● in % of C0057
MCTRL_nLoMLim_a			%QW131.3	C0906/3		Lower torque limitation ● in % of C0057
MCTRL_bNMSwt_b	BOOL	binary	%QX131.0.1	C0907/2	bin	FALSE = speed control TRUE = torque control
MCTRL_nNAdapt_a	integer	analog	%QW131.12	–	–	Adaptive proportional gain of the speed controller
MCTRL_bILoad_b	BOOL	binary	%QX131.0.3	C0907/4	bin	TRUE = integral action component of the speed controller is accepted by *MCTRL_nISet_a*
MCTRL_nISet_a	integer	analog	%QW131.7	C0906/8	dec [%]	Integral action component of the speed controller
MCTRL_nNSet_a			%QW131.1	C0906/1		Speed setpoint
MCTRL_nPAdapt_a			%QW131.8	C0906/9		Impact of C0254 on the proportional gain (in %), ● The sum (without sign) is processed.
MCTRL_dnPosSet_p	double integer	position	%QD131.5	C0908	dec [inc]	Setpoint phase differs from actual phase for phase controller
MCTRL_nPosLim_a	integer	analog	%QW131.9	C0906/5	dec [%]	Influence of the phase controller ● In % of n_{max} (C0011)
MCTRL_bPosOn_b	BOOL	binary	%QX131.0.2	C0907/1	–	TRUE = activate phase controller
MCTRL_nNStartMLim_a	integer	analog	%QW131.5	C0906/6	dec [%]	Lower speed limit at speed limitation
MCTRL_nMAdd_a			%QW131.2	C0906/2		Additional torque setpoint or torque setpoint
MCTRL_nFldWeak_a			%QW131.6	C0906/7		Motor control

13.20.3 Torque setpoint / additional torque setpoint

According to setting of *MCTRL_bNMSwt_b*, *MCTRL_nMAdd_a* serves as a torque setpoint or as an additional torque setpoint.

Torque setpoint

At *MCTRL_bNMSwt_b* = TRUE, the speed control is active.

- ► *MCTRL_nMAdd_a* acts as a torque setpoint.
- ► The speed controllers carry out a monitoring function.
- ► The torque setpoint is defined in [%] of the maximum possible torque.
  – Negative values cause a torque in CCW rotation of the motor.
  – Positive values cause a torque in CW rotation of the motor.
- ► Set the maximum possible torque via C0057:

Code		Possible settings				IMPORTANT	
No.	Designation	Lenze/ {Appl.}	Selection				
C0057	MAX TORQUE					Maximum possible torque of the drive configuration Dependent on C0022, C0081, C0087, C0088 Read only	📖 333
			0.0	{0.1 Nm}	500.0		

Additional torque setpoint

At *MCTRL_bNMSwt_b* = FALSE, the speed control is active.

- ► *MCTRL_nMAdd_a* additionally acts on the output of the n controller.
- ► The limits specified by the torque limitation *MCTRL_nLoMLim_a* and *MCTRL_nHiMLim_a* thereby cannot be exceeded.
- ► The additional torque setpoint can, for instance, be used for friction compensation or acceleration feed forward (dv/dt).

13.20.4 Torque limitation

You can set an external torque limitation via *MCTRL_nLoMLim_a* and *MCTRL_nHiMLim_a*. Thereby you can define different torques for the quadrants ”drive” and ”brake”.

- *MCTRL_nHiMLim_a* is the upper torque limit in [%] of the maximum torque possible.
- *MCTRL_nLoMLim_a* is the lower torque limit in [%] of the maximum torque possible.
- Set the maximum possible torque via C0057.

Stop!

Set positive values in *MCTRL_nHiMLim_a* only, and negative values in *MCTRL_nLoMLim_a* only, because otherwise the speed controller can lose control. The drive may then run out of control.

Note!

- If *MCTRL_nHiMLim_a* is not connected (free), the upper torque limit automatically is 100 % of the maximum torque possible.
- If *MCTRL_nLoMLim_a* is not connected (free), the lower torque limit automatically is -100 % of the maximum torque possible.
- With quick stop (QSP), the torque limitation is switched to an inactive state, i. e. the operation works with ±100 %.

13.20.5 Setting maximum speed

The maximum speed (n_{max}) which is used as a reference variable for the absolute and relative setpoint selection with regard to the acceleration and deceleration times as well as to the upper and lower speed limit, is set via C0011.

► n_{max} = 100 % ≡ (INT) 16384

Note!

MCTRL_nNmaxC11 displays the maximum speed set via C0011.

► By means of this system variable, you are able to program your own speed scalings.

► Example: C0011 = 3000 rpm ⇨ *MCTRL_nNmaxC11* = 3000

Code		Possible settings				IMPORTANT	
No.	Designation	Lenze/ {Appl.}	Selection				
C0011	Nmax	3000				Maximum speed	📖 335
			500	{1 rpm}	16000	Reference value for the absolute and relative setpoint selection for the acceleration and deceleration times. **For parameter setting via interface: greater changes in one step should only be made when the controller is inhibited (CINH)!**	

13.20.6 Speed setpoint limitation

A speed setpoint limitation can be set via C0909.

► You define the speed setpoint via *MCTRL_nNSet_a* in [%] of n_{max}.

► N_{max} is selected via C0011. (📖 335)

Code		Possible settings			IMPORTANT	
No.	Designation	Lenze/ {Appl.}	Selection			
C0909	speed limit	1			Limitation of direction of rotation for speed setpoint	📖 335
			1	-175 ... +175 %		
			2	0 ... +175 %		
			3	-175 ... 0 %		

13.20.7 Torque control with speed limitation

Set *MCTRL_bNMSwt_b* = TRUE, in order to activate this function.

- For the speed limitation a second speed controller (auxiliary speed controller) is connected.
- *MCTRL_nMAdd_a* acts as a bipolar torque setpoint.
- The speed controller 1 is used to make up the upper speed limit.
  – The upper speed limit is specified by *MCTRL_nNSet_a* in [%] of n_{max} (positive sign for clockwise sense of rotation).
- The speed controller 2 (auxiliary speed controller) is used to make up the lower speed limit.
  – The lower speed limit is specified by *MCTRL_nNStartLim_a* in [%] of n_{max} (negative sign for anticlockwise sense of rotation).
- N_{max} is selected via C0011. (📖 335)

Stop!

Use ...
- the upper speed limit for the clockwise sense of rotation (positive values) only.
- the lower speed limit for the anticlockwise sense of rotation (negative values) only.

Otherwise, the drive can run out of control!

13.20.8 Parameterising phase controllers

Among other things, the phase controller is required for the implementation of a phase-synchronous operation or of a drift-free standstill.

Parameter setting

1. Assign *MCTRL_nPosSet_a* to a signal source which provides the phase difference between setpoint phase and actual phase.
2. Define a value > 0 for *MCTRL_nPosLim_a*.
3. Set *MCTRL_bPosOn_b* = TRUE.
4. Set a preferably high proportional gain (V_{pn}) of the speed controller via C0070.
5. Set the gain of the phase controller > 0 via C0254.
   – Increase C0254 during operation until the drive has the required control mode.

Code		Possible settings				IMPORTANT	
No.	Designation	Lenze/ {Appl.}	Selection				
C0070	Vp speedCTRL	3.0				Proportional gain of speed controller (V_{pn})	📖 130
			0.00	{0.01}	127.99		
C0254	Vp angle CTRL	0.4000				Phase controller gain (V_p)	📖 336
			0.0000	{0.0001}	3.9999		

Influence of the phase controller

The output of the phase controller additionally acts upon the speed setpoint.

- ► If the actual phase is lagging, the drive is accelerated.
- ► If the actual phase advances, the drive is decelerated until the desired phase synchronism is achieved.

The influence of the phase controller consists of:

- ► phase difference multiplied by the gain V_p (C0254).
- ► an additional influence via an analog signal at *MCTRL_nPAdapt_a*.
  – V_p = C0254 × *MCTRL_nPAdapt_a* / 16384
- ► limitation of the phase controller output to ±*MCTRL_nPosLim_a*.

Limitation of the phase controller output

This serves to limit the maximum speed-up of the drive when it comes to great phase differences.

13.20.9 Quick stop (QSP)

The QSP function serves to stop the drive – irrespective of the setpoint selection – within the time set in C0105.

- ► The QSP function is active if *MCTRL_bQsp_b* is set = TRUE.
- ► If the SB **DCTRL_DriveControl** is to actuate QSP (see also 📖 337), program the QSP function as follows:

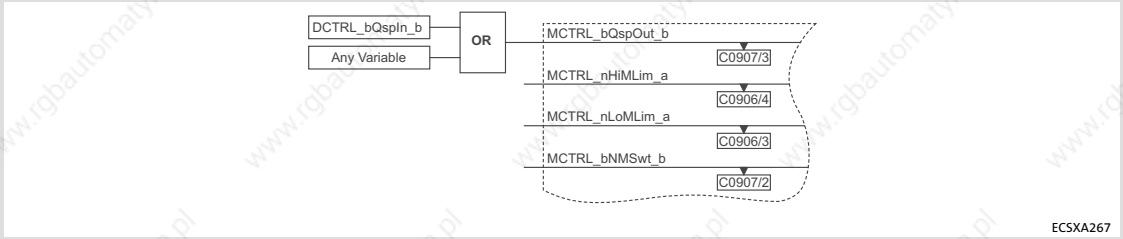

Fig. 13-31 Programming: actuation of a quick stop (QSP) via SB ”Inputs_DCTRL”

Function:

- ► The torque limitation *MCTRL_nLoMLim_a* and *MCTRL_nHiMLim_a* is switched inactively, i. e. the process is run at ±100 % capacity (📖 334). The drive is operated by the speed controller.
- ► The phase controller is switched actively. If the rotor position is moved actively, the drive creates a torque to counter the swing if
  – C0254 is set unequal to ’0’.
  – *MCTRL_nPosLim_a*is controlled by means of a value > 0 %.
- ► The speed is reduced to ’0’ within the deceleration time set via C0105:

Code		Possible settings				IMPORTANT	
No.	Designation	Lenze/ {Appl.}	Selection				
C0105	QSP Tif	0.0				Deceleration time for quick stop (QSP)	📖 337 📖 337
			0.000	{0.001 s}	999.999	Relating to speed variation n_{max} (C0011) ...0 rev./min.	📖 337

13.20.10 Manual field weakening

A manual field weakening can be achieved via *MCTRL_nFldWeak_a*.

- For a maximum excitation *MCTRL_nFldWeak_a* has to be activated by +100 % (= 16384).
- If *MCTRL_nFldWeak_a* is not connected (free), the field weakening automatically is +100 %.

Stop!

If the field is weakened manually (*MCTRL_nFldWeak_a* < 100 %), the drive cannot produce the maximum torque.

13.20.11 Switching frequency changeover

For the inverter the following switching frequencies can be set via C0018:

- 4 kHz for power-optimised operation ⇨ maximum power output of the drive controller, however, with audible pulse operation.
- Automatic switch-over between power-optimised and noise optimised operation (8 kHz).

Code		Possible settings			IMPORTANT	
No.	Designation	Lenze/ {Appl.}	Selection			
C0018	fchop	2			Switching frequency	📖 338
			1	4 kHz sinus	Power-optimised operation permanent 4 kHz frequency	
			2	4 8 kHz sinus	Noise optimised operation automatic change-over to 8 kHz at higher load	

Automatic switching frequency changeover

You can use the automatic switching frequency changeover if you intend to operate the drive in the noise optimised range, and if the available torque for acceleration processes is not sufficient for this purpose.

Condition M = f(I)	Function
$M < M_N (I_N)$	Drive controller operates at 8 kHz (noise optimised)
$M_N (I_{N(8)}) < M < M_N (I_{N(4)})$	Drive controller switches to 4 kHz (power-optimised)
$M > M_{max} (I_{max})$	Drive controller operates at 4 kHz in current limitation

13.20.12 Touch probe (TP)

Procedure: In case of an edge change on the input activating a TP (e. g. X6/DI2), the current angle value (master frequency input value) is saved in the operating system by a very quick interrupt.

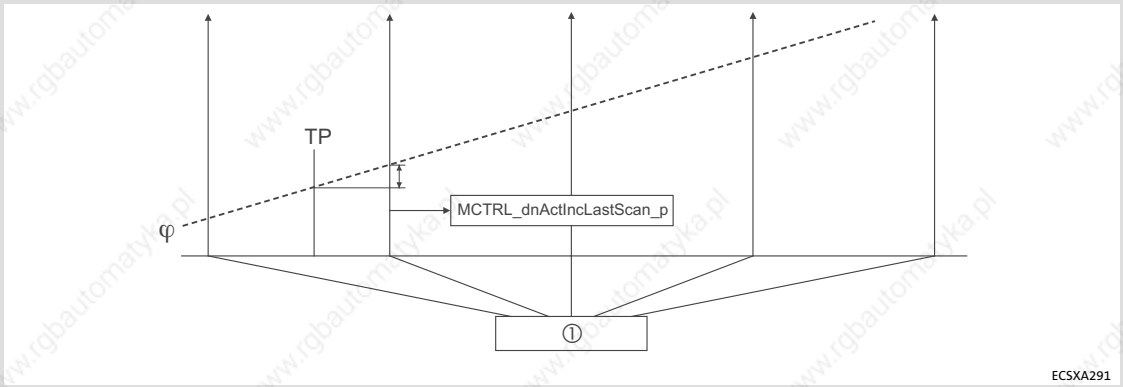

Fig. 13-32 Function diagram of a touch probe (TP)

① Time-equidistant start of an interval task

ϑ Phase-angle signal

Configuring touch probe (TP)

The digital inputs X6/DI1 ... DI4 can be assigned with the following TP signals:

Dig. input	System variable	Signal assignment
X6/DI1	DigIn_bIn1_b	DfIn_bActTpReceived_b (C0431, 📖 309)
X6/DI2	DigIn_bIn2_b	MCTRL_bActTpReceived_b (C0912)
X6/DI3	DigIn_bIn3_b	Freely configurable TP (LenzeTpDrvXXX.lib function library)
X6/DI4	DigIn_bIn4_b	

The following codes are available for touch probe configuration:

Code		Possible settings				IMPORTANT	
No.	Designation	Lenze/ {Appl.}	Selection				
C0910	MCTRL TP2 delay	0				MCTRL dead time compensation TP2 (X6/DI2)	📖 339
			-32767	{1 inc}	32767	1 inc ≡ approx. 60 µs	
C0911	MCTRL TP2 sel.	0				MCTRL touch probe signal source	📖 339
			0	Zero pulse of position encoder (C0490)		X7/X8	
			1	Touch probe input TP2		X6/DI2	
C0912	MCTRL TP2 Edge	0				MCTRL touch probe TP2 edge (for touch probe via digital input X6/DI2 (C0911 = 1))	📖 339
			0	Rising edge TP2			
			1	Falling edge TP2			
			2	Rising and falling edge TP2			
			3	Switched off			

Function sequence

1. The TP is activated in an edge-controlled manner via the digital input X6/DI2 or via a zero pulse from the master frequency input X8 or the resolver input X7.
2. If a TP has been effected, *MCTRL_bActTPReceived_b* is set = TRUE.
3. After the start of the task, *MCTRL_dnActIncLastScan_p* indicates the number of increments [inc/ms] counted since the TP.
4. Following, *MCTRL_bActTPReceived_b* is set = FALSE.

Note!

It is necessary that all three outputs (*MCTRL_nNAct_v*, *MCTRL_bActTPReceived_b* and *MCTRL_dnActIncLastScan_p*) are processed in the task, even if just one signal is required.

MCTRL_nNAct_v (actual speed value)

- The polarity of the digital input X6/DI2 configured under C0114/2 has no influence on the edge evaluation.
- The value *MCTRL_nNAct_v* is scaled to increments per millisecond [inc/ms].
  – (INT) 16384 corresponds to 15000 rpm. See chapter ”Signal types and scaling” (📖 24).
- For every task in which *MCTRL_nNAct_v* is used, the operating system creates an individual integrator that is reset after every start of the task (task-internal process image).
- For reliable TP generation, *MCTRL_nNAct_v* must not be used in the PLC_PRG.

Example: *MCTRL_nNAct_v* in a 10 ms task:

- When the 10 ms task starts, the value of the integrator is stored in a local area of the task and the integrator is reset. The value in the local area gives an average value in increments per 1 ms.
- If a position value is to be calculated from the average value, the average value has to be multiplied by (*SYSTEM_nTaskInterval* / 4) in order to obtain increments per 10 ms.
  – At a 10 ms task, the value of *SYSTEM_nTaskInterval* is ’40’ (40 × 0.25 ms = 10 ms).
  – See also chapter ”SYSTEM_FLAGS (system flags)” (📖 348).
- The Lenze function blocks already implement this procedure.

13.20.13 Adjusting the motor data

Tip!

The GDC ”input assistant for motor data” makes motor parameterisation easy.
For more information, please see the ”Global Drive Control (GDC) - Getting started” Manual.
In ”GDC Easy”, the ”Input assistant for motor data” is not available. In this case, please contact your Lenze representative for the stator resistance and leakage inductance data.

For the manual adjustment of the motor data, the following codes are provided to you:

Code		Possible settings				IMPORTANT	
No.	Designation	Lenze/ {Appl.}	Selection				
[C0006]	Op mode	1				Operating mode of the motor control	
			1	Servo PM-SM		Servo control of synchronous motors	
			2	Servo ASM		Servo control of asynchronous motors	
C0022	Imax current	→				I_{max} limit	
			0	{0.01 A}		→ Device-dependent list Max. current can be gathered from the technical data.	
C0077	Vp fieldCTRL	5.0				Field controller gain (V_{pF})	📖 133
			0.00	{0.01}	63.99		
C0078	Tn fieldCTRL	20.0				Field controller reset time (T_{nF})	📖 133
			1.0	{0.5 ms}	6000.0		
C0079	DIS:Lh					Mutual inductance of the asynchronous motor Read only	
			0.0	{0.1 mH}	3276.7		
[C0080]	Res pole no.	1				Number of pole pairs of resolver	
			1	{1}	10		
[C0081]	Mot power	3.20				Rated motor power according to nameplate	
			0.01	{0.01 kW}	500.00		
[C0082]	DIS:Rr					Rotor resistance of the asynchronous motor Read only	
			0.000	{0.001 Ω}	32.767		
C0083	DIS:Tr					Rotor time constant of the asynchronous motor Read only	
			0.00	{0.01 ms}	327.67		

Code		Possible settings				IMPORTANT	
No.	Designation	Lenze/ {Appl.}	Selection				
[C0084]	Mot Rs	1.10				Stator resistance of the motor The upper limit is device-dependent.	
			0.00	{0.01 Ω}	95.44	ECSxS/P/M/A004	
					47.72	ECSxS/P/M/A008	
					23.86	ECSxS/P/M/A016	
					11.93	ECSxS/P/M/A032	
					7.95	ECSxS/P/M/A048	
					5.96	ECSxS/P/M/A064	
[C0085]	Mot Ls	5.30				Leakage inductance of the motor	
			0.00	{0.01 mH}	200.00		
[C0087]	Mot speed	3700				Rated motor speed	
			300	{1 rpm}	16000		
[C0088]	Mot current	7.0				Rated motor current	
			0.5	{0.1 A}	500.0		
[C0089]	Mot frequency	185				Rated motor frequency	
			10	{1 Hz}	1000		
[C0090]	Mot voltage	325				Rated motor voltage	
			50	{1 V}	500		
[C0091]	Mot cos phi	1.0				cos φ of the asynchronous motor	
			0.50	{0.01}	1.00		
C0092	DIS:Isdeff					Magnetising current of the asynchronous motor Only display	
			0.00	{0.01 A}	327.67		
C0093	Drive ident					Device identification of the ECS axis module Read only	
			0	Defective power section			
			1	No power section recognised			
			4	ECSxS/P/M/A004C4			
			8	ECSxS/P/M/A008C4			
			16	ECSxS/P/M/A016C4			
			32	ECSxS/P/M/A032C4			
			48	ECSxS/P/M/A048C4			
			64	ECSxS/P/M/A064C4			
			65	ECSxS/P/M/A064C2			
[C0095]	Rotor pos adj	0				Activation of rotor position adjustment of a synchronous motor C0058 shows the rotor displacement angle.	📖 127
			0	Inactive			
			1	Active			
C0097	DIS:Lt-Ident	0				Power stage identification	
			0	{1}	255		
C0110	Service Code					Fine adjustment - mutual inductance	
			50	{1 %}	200		

Code		Possible settings				IMPORTANT
No.	Designation	Lenze/ {Appl.}	Selection			
C0111	Service Code					Fine adjustment - rotor resistance
			50,00	{1 %}	199,99	
C0112	Service Code					Fine adjustment - rotor time constant
			50	{1 %}	200	
C0113	Service Code					Fine adjustment - magnetising current (I_{sd})
			50	{1 %}	200	

13.20.14 Monitoring

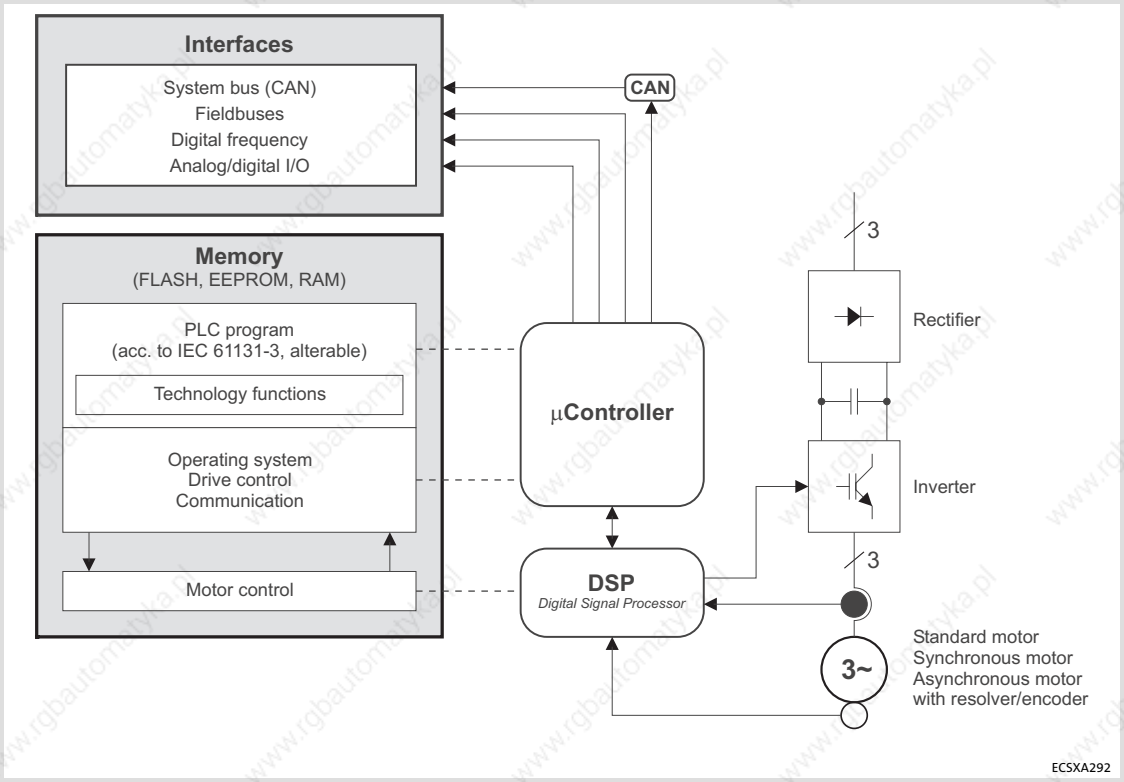

Fig. 13-33 Signal flow: motor control – PLC

The motor control is provided with different monitoring functions, protecting the drive against impermissible operating conditions.

If a monitoring function is activated,

- ► the corresponding response for device protection is initiated.
- ► the fault indication is entered on the first position in the history buffer (📖 213).
- ► a corresponding variable is set to TRUE as long as the trigger condition is fulfilled.
  The variables of the monitoring function can be processed in the application program of the PLC.

The current error number is also displayed in the variable *DCTRL_wFaultNumber* after the PLC has been started.

The fault history buffer (C0168/x) saves fault messages with an offset that indicates the type of response.

No. of the fault message	Type of response
0xxx	TRIP
1xxx	Message
2xxx	Warning
3xxx	FAIL-QSP (only for ECSxS/P/M/A axis modules)

Example: C0168/1 = 2061

► x061:
The current fault (subcode 1 of C0168) is a communication error (fault message ”CE0”/no. ”x061”) between the AIF module and the ECS axis module.

► 2xxx:
The response is a warning.

Note!
For an overview of the monitoring functions, please see the chapter ”Monitoring” (📖 184).
The monitoring responses are described in the same chapter (📖 189).

Tip!
Occurring faults generally do not affect the operating ability of the PLC!

13.21 OSC_Oscilloscope (node number 60)

Note!

When the oscilloscope is integrated into the IEC 61131 program (DDS), it requires a permanent calculating time of 100 µs. Check in the task monitor, if enough calculating capacity is available.

The following steps must be carried out to activate the oscilloscope in the DDS:

1. Enter the system block **OSC_Oscilloscope** into the control configuration.
2. Read the system block input *OSC_bUsed* into the program organisation unit of the program type.

Thus the oscilloscope is called in the input process of the tasks which also contains the program wit the entry mentioned. The minimum sampling rate is determined by the task which includes the oscilloscope.

Examples

► AWL:

LD OSC_bUsed

ST A

► ST:

A := OSC_bUsed

Further information ....

concerning the handling and functional range of GDO can be obtained from the Manual ”Global Drive Oscilloscope (GDO), Getting started”.

13.22 SYSTEM_FLAGS (system flags, node number 151)

System flags are global variables that are integrated in the run-time system as an inherent part. They feature functionalities for making programming easier.

13.22.1 Inputs SYSTEM_FLAGS

The following system flags are part of the ECSxA... axis module:

Variable	Data type	Address	Comments
SYSTEM_bClock01Hz	BOOL	%IX151.0.0	0.1 Hz system clock
SYSTEM_bClock1Hz		%IX151.0.8	1.0 Hz system clock
SYSTEM_bClock10Hz		%IX151.1.0	10 Hz system clock
SYSTEM_bClock0100Hz		%IX151.1.8	100 Hz system clock
SYSTEM_bTogCycleTask		%IX151.2.0	Toggle marker - cyclic task
SYSTEM_b1LoopCyclicTask		%IX151.2.8	First loop - cyclic task
SYSTEM_b1LoopTask2		%IX151.3.0	First loop - task ID2
SYSTEM_b1LoopTask3		%IX151.3.8	First loop - task ID3
SYSTEM_b1LoopTask4		%IX151.4.0	First loop - task ID4
SYSTEM_b1LoopTask5		%IX151.4.8	First loop - task ID5
SYSTEM_b1LoopTask6		%IX151.5.0	First loop - task ID6
SYSTEM_b1LoopTask7		%IX151.5.8	First loop - task ID7
SYSTEM_b1LoopTask8		%IX151.6.0	First loop - task ID8
SYSTEM_b1LoopTask9		%IX151.6.8	First loop - task ID9
SYSTEM_nTaskInterval	integer	%IW151.7	Interval of current task
SYSTEM_nTaskID		%IW151.8	Identification of current task

Tip!
The system flags are not generated in simulation mode.

SYSTEM_bClockxHz

These system flags output a fixed clock pulse with an equal pulse/pause ratio.

- State alterations of the flag are effected in real time.
- When you use this system flag, observe the sampling frequency used for polling the flag (aliasing effect). It should at least be twice the change frequency.

  Example: You want to use the system flag *SYSTEM_bClock100Hz* as a clock for a counter.
- The pulse/pause ratio is 5 ms/5 ms.
- To avoid an aliasing effect, the counter must always be polled with an INTERVAL TASK < 5 ms.

Note!
The *SYSTEM_bClockxHz* system variables must not be used to trigger event-controlled tasks. Use time-controlled tasks for this.

SYSTEM_bTogCycleTask

This system flag alters the state with the cyclic task:

1. cycle: FALSE
2. cycle: TRUE
3. cycle: FALSE
4. cycle: TRUE
   etc.

SYSTEM_nTaskInterval

This system flag indicates the interval of the running task with a resolution of 0.25 ms.

► If, for instance, a tasks of 10 ms is processed, the system flag indicates '40' (40 × 0.25 ms = 10 ms).

► If a task different from an interval task is processed, the system flag indicates 0".

SYSTEM_nTaskID

This system flag indicates the task ID of the running task.

SYSTEM_b1LoopCyclicTask/SYSTEM_b1Loop Task X

These system flags are TRUE only once during the first cycle of a task.

► After the first cycle, the flags will be set to FALSE.

► The only way to reset the status to TRUE is to reset the program in the drive controller.

13.22.2 Outputs SYSTEM_FLAGS

Variable	Data type	Address	Comments
SYSTEM_bPLCResetAndRun	BOOL	%QX151.0.0	This system flag executes a reset with an immediate restart of the axis module ECSxA: ● After the reset the flag is deleted and the restart is executed.

14 Appendix

14.1 PLC functionality

Field		Quantity	Description	
Inputs	Digital	1	Input for controller enable	24 V DC 8 mA per input [1] response time 0.25 ms
		4	Free inputs (2 interrupt-capable[1])	
	Analog	1	Free input (11 bits + sign)	-10 ... +10 V -20 ... +20 mA/+4 ... +20 mA
	"Safe torque off" (former "safe standstill")	2	X6/SI1 for controller inhibit X6/SI2 for pulse inhibit	24 V DC / 8 mA per input
	Digital frequency	1	Input	0 ... 500 kHz
Outputs	Digital	1	Free output	24 V DC / 0.7 A max. 1.4 A (short-circuit-proof)
	Digital frequency	1	Output	0 ... 500 kHz
	"Safe torque off" (former "safe standstill")	1	S6/SO for feedback	24 V DC / 0.7 A max. 1.4 A (short-circuit-proof)
Feedback system			Resolver, incremental or sin/cos encoder	
Operation set			According to IEC61131-3	
Counter/times			According to IEC61131-3, depending on the data memory available	
Fast counter		1	0 ... 500 kHz	
Flags		512	Flag words	
Memory			See chapter 14.3 (📖 351)	
Processing time (1-bit operation)			0.7 µs	
Task types		8	Time or event-controlled tasks (1 ms ... 16 s)	
		1	Cyclic task	
Functions			• PID control functions • Electrical shaft • Positioning function • Mains failure control • Brake control • Yield point arithmetic	
Programming software			Drive PLC Developer Studio • Programming languages according to IEC61131-3 (IL, LD, FBD, ST, SFC) as well as CFC editor • Monitoring, visualisation, simulation and debugging	
Technology functions			Software packages (cam, positioner, winder)	

14.2 Extendability / networking

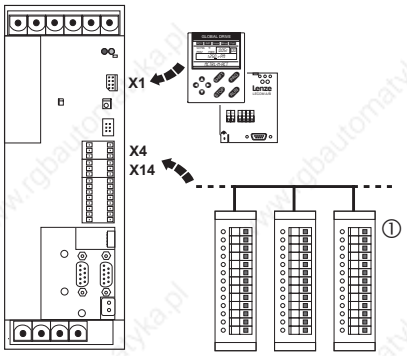

ECSXA294

x1	**Automation interface (AIF)** for EMZ9371BB operating unit or the following AIF modules: ● 2102 LECOM-A/B/LI ● 2103 FP interface (RS-232C) ● 2111 INTERBUS ● 2112 INTERBUS loop ● 2133 PROFIBUS-DP ● 2174 CAN addressing module ● 2175 DeviceNet/CANopen *Others in preparation*
X4	**System bus interface CAN**
X14	**System bus interface CAN-AUX**
①	**Terminal extension - IO system IP20**

System bus (CAN)

Interface	CAN objects available	
Integrated system bus interfaces ● X4 (CAN) ● X14 (CAN-AUX)	PDOs	CAN1_IN/CAN1_OUT CAN2_IN/CAN2_OUT CAN3_IN/CAN3_OUT CANaux1_IN/CANaux1_OUT CANaux2_IN/CANaux2_OUT CANaux3_IN/CANaux3_OUT
	SDOs	SDO1 (parameter data channel 1) SDO2 (parameter data channel 2)
		L_ParRead/L_ParWrite functionality only available for CAN (X4)
	Sync telegram	
	CanDSx driver for mapping indices to codes and for bus monitoring functions ”Heartbeat” and ”Node Guarding” (see Manual for function library **LenzeCanDSxDrv.lib**). **Note:** No bus monitoring functions ”Heartbeat” and ”Node Guarding” for CAN-AUX.	
Automation interface (AIF) ● X1 with corresponding fieldbus module (e. g. 2175)	PDOs	XCAN1_IN/XCAN1_OUT XCAN2_IN/XCAN2_OUT XCAN3_IN/XCAN3_OUT XCANaux1_IN/XCANaux1_OUT XCANaux2_IN/XCANaux2_OUT XCANaux3_IN/XCANaux3_OUT
	SDOs	XSDO1 (parameter data channel 1) XSDO2 (parameter data channel 2)
	Sync telegram	
	AifParMap driver for mapping code accesses via AIF to other codes (see Manual for function library **LenzeAifParMapDrv.lib**).	

14.3 Memories

The table below gives you an overview of the memories available:

Memory		Size	Information
ROM			
	Program memory	512 kbytes	Re-written whenever the program is downloaded
RAM			
	PLC data memory	10 kbytes	Can be symbolically used for FB instances and PLC variables.
	Application memory	2 blocks à 64 kbytes	Data get lost after mains disconnection.
E2PROM-buffered memory			
	Retain memory	160 bytes	See chapter 14.3.1
	Persistent memory	32 bytes	See chapter 14.3.2

Tip!

Function library **LenzeMemDrv.lib** includes functions for read/write access to the additional backup memory (application data memory) of the ECSxA... axis module.

Further information ...

can be found in the Manual for the function library **LenzeMemDrv.lib**.

14.3.1 Retain memory

The values of the retain variables are stored fail-safe in the retain memory, and therefore are still available to the program after mains switching. Saving with C0003 = 1 is not necessary.

- Retain variables are declared by using the variable class **`VAR RETAIN`**.
- Retain variables are created as a symbolically addressable memory.
- At every program download, the retain variables are reset to their initialisation value; if no initialisation value is specified, the respective retain variable is initialised with the value ’0’.
- The retain variables in the ECSxA... axis module can be reset to their initialisation value in the online mode of the DDS by using the commands **Online→Reset (cold)** or **Online→Reset (original)**.

14.3.2 Persistent memory

32 bytes of data can be stored fail-safe in the persistent memory, so that they are also still available to the program after mains switching. In contrast to the retain memory, the data even remains in the persistent memory after a new program download. Saving with C0003 = 1 is not necessary.

- The persistent memory can only be deleted in the online mode of the DDS by using the command **Online→Reset (original)**.

Access to the persistent memory

Access to the persistent memory is effected via the system variables of the control configuration, assigning the available 32 bytes to several variables of different data types at the same time, which enables them to be used in the PLC program according to specific applications:

Byte	Variable (8 bit)		Variable (16 bit)		Variable (32 bit)	
	Identifier	Address	Identifier	Address	Identifier	Address
0	VAR_Persistent_byByte0	%QB171.0	VAR_Persistent_wWord0	%QW171.0	VAR_Persistent_dwDWord0	%QD171.0
1	VAR_Persistent_byByte1	%QB171.1				
2	VAR_Persistent_byByte2	%QB171.2	VAR_Persistent_wWord1	%QW171.1		
3	VAR_Persistent_byByte3	%QB171.3				
4	VAR_Persistent_byByte4	%QB171.4	VAR_Persistent_wWord2	%QW171.2	VAR_Persistent_dwDWord1	%QD171.1
5	VAR_Persistent_byByte5	%QB171.5				
6	VAR_Persistent_byByte6	%QB171.6	VAR_Persistent_wWord3	%QW171.3		
7	VAR_Persistent_byByte7	%QB171.7				
8	VAR_Persistent_byByte8	%QB171.8	VAR_Persistent_wWord4	%QW171.4	VAR_Persistent_dwDWord2	%QD171.2
9	VAR_Persistent_byByte9	%QB171.9				
10	VAR_Persistent_byByte10	%QB171.10	VAR_Persistent_wWord5	%QW171.5		
11	VAR_Persistent_byByte11	%QB171.11				
12	VAR_Persistent_byByte12	%QB171.12	VAR_Persistent_wWord6	%QW171.6	VAR_Persistent_dwDWord3	%QD171.3
13	VAR_Persistent_byByte13	%QB171.13				
14	VAR_Persistent_byByte14	%QB171.14	VAR_Persistent_wWord7	%QW171.7		
15	VAR_Persistent_byByte15	%QB171.15				
16	VAR_Persistent_byByte16	%QB171.16	VAR_Persistent_wWord8	%QW171.8	VAR_Persistent_dwDWord4	%QD171.4
17	VAR_Persistent_byByte17	%QB171.17				
18	VAR_Persistent_byByte18	%QB171.18	VAR_Persistent_wWord9	%QW171.9		
19	VAR_Persistent_byByte19	%QB171.19				
20	VAR_Persistent_byByte20	%QB171.20	VAR_Persistent_wWord10	%QW171.10	VAR_Persistent_dwDWord5	%QD171.5
21	VAR_Persistent_byByte21	%QB171.21				
22	VAR_Persistent_byByte22	%QB171.22	VAR_Persistent_wWord11	%QW171.11		
23	VAR_Persistent_byByte23	%QB171.23				

Byte	Variable (8 bit)		Variable (16 bit)		Variable (32 bit)	
	Identifier	Address	Identifier	Address	Identifier	Address
24	VAR_Persistent_byByte24	%QB171.24	VAR_Persistent_wWord12	%QW171.12	VAR_Persistent_dwDWord6	%QD171.6
25	VAR_Persistent_byByte25	%QB171.25				
26	VAR_Persistent_byByte26	%QB171.26	VAR_Persistent_wWord13	%QW171.13		
27	VAR_Persistent_byByte27	%QB171.27				
28	VAR_Persistent_byByte28	%QB171.28	VAR_Persistent_wWord14	%QW171.14	VAR_Persistent_dwDWord7	%QD171.7
29	VAR_Persistent_byByte29	%QB171.29				
30	VAR_Persistent_byByte30	%QB171.30	VAR_Persistent_wWord15	%QW171.15		
31	VAR_Persistent_byByte31	%QB171.31				

Note!

Some projects, program examples, as well as Lenze templates use areas of the persistent memory. They also are labelled by ”LenzeInternalUse” and must not be altered by the user.

Example: Saving current position fail-safe

By means of an AT declaration, for instance, the variable can be directly connected to the address of a persistent variable in its current position, and like this can save the position fail-safe:

```
g_dnActualPosition_p AT%QD171.6:DINT;
```

14.3.3 Download of various data items

In DDS (as of version 2.0) it is possible to attach a file to your project whose data are automatically transferred in the drive controller when the program is downloaded.

► This mechanism is, for instance, used in the **software package "Cam"** to download motion profiles.

Note!
With regard to the ECSxA... axis module, the additional data is immediately attached to the PLC program, because the module is not provided with an application memory (FLASH).

Data will be downloaded if the following conditions are met:

1. The PLC program in the ECSxA... axis module has to be stopped.
2. The header of the file attached to the project must have the following structure:

Name	Data type	Data length in bytes	Content	
wSizeHeader	WORD	2	Header length in bytes	
wDataType	WORD	2	Data specification identifier ● This information can be found under C2131 after data has been downloaded.	
			0 ... 10000	Lenze-specific data
			> 10000	User data
dwVersion	DWORD	4	Data version ● This information can be found under C2132 after data has been downloaded.	
dwRealSize	DWORD	4	User data length in bytes (without header)	
dwTimeStamp	DWORD	4	Time stamp of the last data change ● This information can be found under C2133 after data has been downloaded.	
wLicenseInfo	WORD	2	*Reserved for future extensions*	
wSizeSymbolicName	WORD	2	Length of the symbolic file name	
achSymbolicName	ACH	wSizeSymbolicName	Character array including the symbolic file name ● This information can be found under C2130 after data has been downloaded.	
wCopyToRam	WORD	2	Specifying whether the data is automatically copied into the application RAM of the ECSxA... axis module after download. ● Maximum data length = 128 kbytes (RAM block 1 & 2)	
			0	Data is not copied into the application RAM.
			1	Data is copied into the application RAM.
			2 ... 65535	Reserved
dwReserved	DWORD	4	*Reserved for future extensions*	
awSizeAddInfo	DWORD	190		

Interpretation of the header information: least significant byte first.

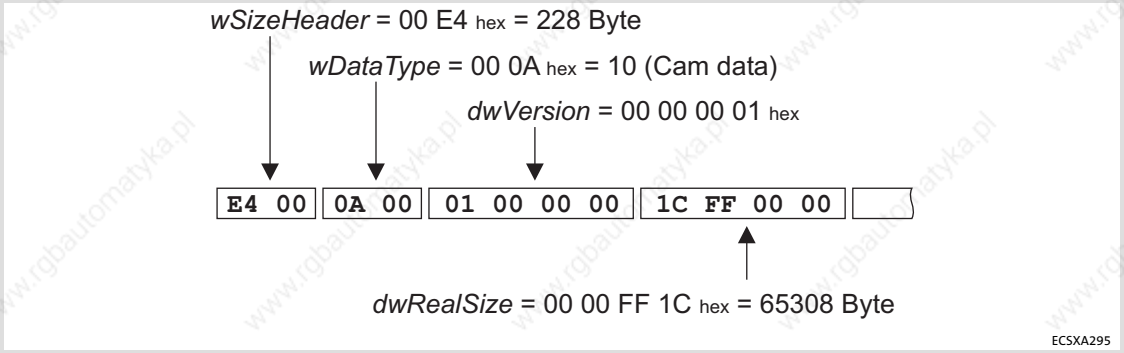

Fig. 14-1 Header interpretation

14.3.4 Temporary codes

The codes C2500 and C2501 are temporary codes, i. e. the data of these codes

- ► does not assign storage space in the EPROM of the drive.
- ► cannot be stored with C0003 = 1 in the parameter set of the drive.
- ► is lost after switch-off of the drive or after mains failure.
- ► is fixedly interlinked with the flag area of the PLC.

Tip!

- ► Temporary codes are suited for the reception of parameters which are to be accessed during a switch-on cycle of the ECSxA... axis module only.
- ► Furthermore, the codes present the possibility to directly (e. g. via HMI) access the flag area of the ECSxA... axis module without having to apply a variable.

Code		Possible settings				IMPORTANT	
No.	Designation	Lenze/ {Appl.}	Selection				
C2500						PLC flag 1 ... 255	📖 355
			0	{1}	65535		
C2501						PLC flag 256 ... 512	📖 355
			0	{1}	65535		

14.3.5 RAM memory access via codes

Note!

- ► In the system task, the memory access is processed at the same time as the PLC program. This is why the processing time depends on the workload of the system.
- ► If you want to access the RAM memory from the IEC 61131 program, you can use the functions of the **LenzeMemDrv.lib** function library for this purpose.

If you want to access the RAM memory of the ECSxA... axis module by external controls or PC tools, e. g. in order to manipulate the data of motion profiles online, you can implement a RAM memory access by means of the following codes:

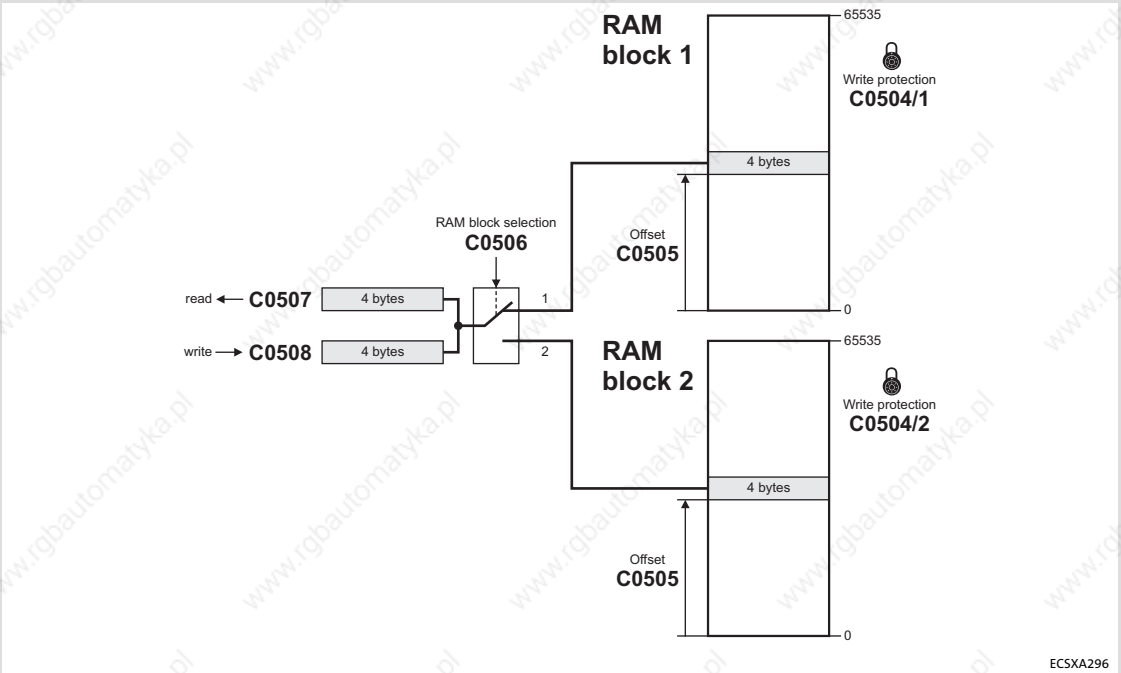

Fig. 14-2 Codes for RAM memory access

Codes

Code		Possible settings			IMPORTANT	
No.	Designation	Lenze/ {Appl.}	Selection			
C0504					Activate/deactivate write protection for RAM memory ● In case of activated write protection, writing on the RAM memory via codes or functions from the function library **LenzeMemDrv.lib** not possible.	📖 356
1		0	0	Write protection RAM block 1 inactive		
			1	Write protection RAM block 1 active		
2		0	0	Write protection RAM block 2 inactive		
			1	Write protection RAM block 2 active		

Code		Possible settings			IMPORTANT	
No.	Designation	Lenze/ {Appl.}	Selection			
C0505		0			Offset address within the RAM block selected via C0506	📖 356
			0	{1} 65532		
C0506		1			Selection of the RAM block for access via C0509	📖 356
			1	RAM block 1		
			2	RAM block 2		
C0507		0			Value read from the RAM block ● After reading, the pointer to the memory address is automatically incremented by 4 bytes.	📖 356
			0	{1} 65532		
C0508		0			Value to be written into the RAM block ● After writing, the pointer to the memory address is automatically incremented by 4 bytes.	📖 356
			0	{1} 65532		
C0509	CmpChecksRam	0			Check sum verification	📖 356
			0	Inactive	Stop the PLC during the check sum verification to avoid a time-out when reading back the code.	
			1	Active		

Auto increment access

Reading/writing of the corresponding 4 data bytes is effected by means of the ”auto increment access”, i. e. the pointer to the corresponding address in the selected RAM block is automatically incremented by 4 bytes after every reading of the code C0507, or after writing of the code C0508.

Example: reading of successive ”double integer” values from the RAM block by means of auto increment access

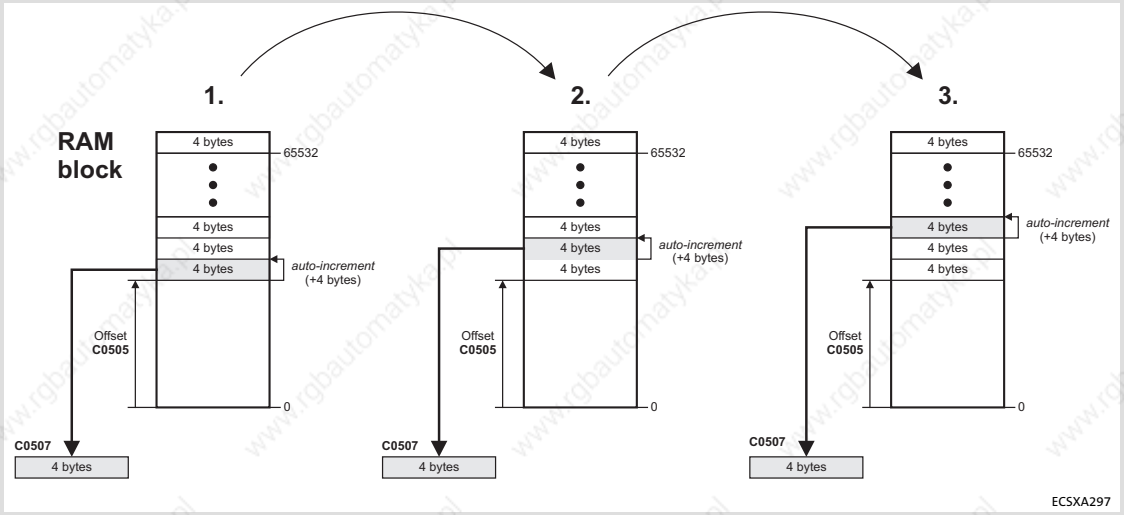

Fig. 14-3 Example: auto increment access

14.4 System program organisation units

System POUs are program organisation units of the ”program” type, which by means of a specific designation adopt the feature of being started subject to an event occurring in the ECSxA... axis module.

- ► The program includes max. 1000 instructions for system POUs.
- ► Unlike tasks or PLC_PRG, system POUs are not run-time monitored by a ”watchdog”.
- ► See the following table for special POU names and the related events for starting the POU:

POU name	Event for starting POU	The POU starts if
PLC_TaskOverrun	Task overflow	...the task monitoring time is exceeded.
PLC_RealError	Floating-point error	...a floating-point error occurs.
PLC_FailTripping	TRIP	...a trip is set.
PLC_WarningTripping	Warning	...a warning is activated.
PLC_MessageTripping	Message	...a message is indicated.
PLC_FailQspTripping	FAIL-QSP	...a FAIL-QSP is activated. [1]
PLC_CANError	CAN bus error	... a CAN bus error occurs (e.g. BUS-OFF). [3]
PLC_AIFError	AIF bus error	... an AIF bus error occurs. [3]
PLC_Restart	Start	... the START command is activated after a STOP.
PLC_ColdStart	Cold start	... a RESET, RESET (cold), RESET (original) or a program download has been activated. [2] **Note:** System variables must not be used in PLC_ColdStart since this can lead to an unexpected maloperation of the control system (e.g. restart of the motor).
PLC_Stop	PLC stop	... the STOP command is activated. [4]
PLC_Undervoltage	LU threshold	... the set LU threshold is fallen below.

[1] Is only called if pulse inhibit is not active.

[2] The CAN/AIF bus is ready after this POU has been executed.

[3] Only called if all monitoring functions of the corresponding communication are deactivated.

[4] This POU is not activated by Reset (cold, original)!

Tip!

If you need a system POU for an event-controlled start, create a ”program” POU and use the name of this POU as POU name related to the corresponding event listed in the table.

14.5 Code list

Code		Possible settings				IMPORTANT	
No.	Designation	Lenze/ {Appl.}	Selection				
C0002	Par load	0				Load parameter set	
			0	Load Lenze setting		Load Lenze setting into the RAM and activate it: **Only possible with C2108 = 2.**	
			1	Load parameter set 1		Load parameter set 1 into the RAM and activate it: **Parameter set 1 is loaded automatically after every mains connection.**	
C0003	Par save	0				Non-volatile saving of parameter set	
			0	Saving executed			
			1	Save parameter set			
C0004	Op display	56				Keypad status display	
			1	{Code no.}	9999	The keypad displays the selected code in the operating level, if no status messages from C0183 are active (e. g.: 56 = torque setpoint (C0056))	
[C0006]	Op mode	1				Operating mode of the motor control	
			1	Servo PM-SM		Servo control of synchronous motors	
			2	Servo ASM		Servo control of asynchronous motors	
C0009	LECOM address	1				Device address for operation via AIF interfaceX1	
			1	{1}	99	Communication modules on AIF interface X1: ● LECOM-A/B/LI 2102 10, 20, ..., 90 are reserved for broadcast to groups of nodes. ● PROFIBUS-DP 213x	
C0011	Nmax	3000				Maximum speed	📖 335
			500	{1 rpm}	16000	Reference value for the absolute and relative setpoint selection for the acceleration and deceleration times. **For parameter setting via interface: greater changes in one step should only be made when the controller is inhibited (CINH)!**	
C0017	FCODE (QMIN)	50				Used for speed signals	📖 325
			-16000	{1 rpm}	16000		
C0018	fchop	2				Switching frequency	
			1	4 kHz sin		4 kHz permanent PWM frequency	
			2	8/4 kHz sin		8 kHz PWM frequency with automatic derating to 4 kHz at high load	

Code		Possible settings				IMPORTANT	
No.	Designation	Lenze/ {Appl.}	Selection				
C0019	Thresh nact = 0	0				Threshold, when n_{act} = 0 rpm is detected. (DCTRL_bNActEq0_b)	
			0	{1 rpm}	16000		
C0022	Imax current	→				I_{max} limit	
			0	{0.01 A}		→ Device-dependent list Max. current can be gathered from the technical data.	
C0023	Imax fld.weak	0				Maximum field weakening current for synchronous machines	
			0	{1 %}	100		
C0026						Offset for relative analog signals (AIN)	📖 251 📖 325
1	FCODE(offset)	0.0	-199.99	{0.01 %}	199.99	FCODE_nC26_1_a	
2	FCODE(offset)	0.0				FCODE_nC26_2_a	
C0027						Gain for relative analog signals (AIN)	📖 251 📖 325
1	FCODE(gain)	100.0	-199.99	{0.01 %}	199.99	FCODE_nC27_1_a	
2	FCODE(gain)	100.0				FCODE_nC27_2_a	
C0030	DFOUT const	3				Constant for digital frequency output DFOUT_nOut_v on X8 in increments per revolution.	📖 318 📖 104 📖 110
			0	256 inc/rev			
			1	512 inc/rev			
			2	1024 inc/rev			
			3	2048 inc/rev			
			4	4096 inc/rev			
			5	8192 inc/rev			
			6	16384 inc/rev			
C0032	FCODE gearbox	1				Freely configurable code for absolute analog signals ● FCODE_nC32_a (gearbox factor numerator)	📖 325
			-32767	{1}	32767		
C0034	Mst current	0				Selection: master voltage/master current on analog input (AIN1_nIn_a)	📖 251
			0	-10 ... + 10 V		Master voltage	
			1	+4 ... +20 mA		Master current	
			2	-20 ... +20 mA			
C0037	Set-value rpm	0				FCODE_nC37_a setpoint selection in rpm	📖 325
			-16000	{1 rpm}	16000		
C0040	Ctrl enable	1				Controller inhibit (CINH) ● Writing: Controls the controller inhibit ● Reading: Reads the status of the controller inhibit	
			0	Controller inhibited			
			1	Controller enabled			

Code		Possible settings				IMPORTANT	
No.	Designation	Lenze/ {Appl.}	Selection				
C0042	DIS: QSP					Quick stop status (QSP) Only display	📖 303 📖 303
			0	QSP not active			
			1	QSP active			
C0043	Trip reset					Reset active fault message (TRIP RESET)	
			0	Reset fault message (TRIP RESET)			
			1	Active fault message			
C0050	MCTRL-NSET2					Speed setpoint on speed controller input (MCTRL_nNSetIn_a) Only display	
			-100.00	{0.01 %}	100.00		
C0051	MCTRL-NACT					Actual speed (MCTRL_nNAct_a) Only display	
			-30000	{1 rpm}	30000		
C0052	MCTRL Umot					Actual motor voltage Only display	
			0	{1 V}	800		
C0053	UG-VOLTAGE					DC-bus voltage Only display	
			0	{1 V}	900		
C0054	Imot					Actual motor current Read only	
			0.0	{0.1 A}	500.0		
C0055	Phase current					Instantaneous phase current Read only	
1	iu		0.0	{0.1 A}	500.0	Instantaneous current in U phase	
2	iv					Instantaneous current in V phase	
3	iw					Instantaneous current in W phase	
4	Io					Instantaneous theoretical star-point current	
C0056	MCTRL-MSET2					Torque setpoint on speed controller output (MCTRL_nMSetIn_a) Only display	
			-100	{1 %}	100		
C0057	MAX TORQUE					Maximum possible torque of the drive configuration Dependent on C0022, C0081, C0087, C0088 Read only	📖 333
			0.0	{0.1 Nm}	500.0		
C0058	Rotor diff	-90.0				Rotor displacement angle for synchronous motors (C0095)	📖 127
			-180.0	{0.1 °}	179.9		
C0059	Mot pole no.					Pole pair number of the motor Only display	
			1	{1}	200		

Code		Possible settings				IMPORTANT	
No.	Designation	Lenze/ {Appl.}	Selection				
C0060	Rotor pos					Current rotor position; value is derived from position encoder. Therefore, it is only valid as rotor position if the position encoder settings under C0490 are identical with the settings of the speed encoder on the motor shaft under C0495. Only display	📖 124
			0	{1 inc}	2047	1 rev = 2048 inc	
C0061	Heatsink temp					Heatsink temperature Only display	📖 196
			-200	{1 °C}	200		
C0062	Interior temp					Temperature inside the device Only display	📖 197
			-200	{1 °C}	200		
C0063	Mot temp					Motor temperature Only display	📖 193
			0	{1 °C}	200		
C0064	Utilization					Device utilisation (I x t) over the last 180 s Only display	
			0	{1 %}	150	• C0064 > 100 % activates OC5-TRIP. • TRIP-RESET only is possible if C0064 < 95 %.	
C0065	U24 ext					External supply voltage Read only	
			0.0	{0.1V}	100.0		
C0066	Motor load					Thermal motor load $I^{2x}t$ Only display	📖 201
			0	{1 %}	250		
C0067	Act trip					Current fault (TRIP) (in case of FAIL-QSP, warning and message, "0" is displayed.) Only display	📖 218
C0070	Vp speedCTRL	3.0				Proportional gain of speed controller (V_{pn})	📖 130
			0.00	{ 0.01}	127.99		
C0071	Tn speedCTRL	24.0				Reset time - speed controller (T_{nn})	📖 130
			1.0	{0.5 ms}	6000.0		
C0072	Td speedCTRL	0.0				Derivative gain of speed controller (T_{dn})	📖 130
			0.0	{0.1 ms}	32.0		
C0074	Dynamics	0				Pilot control of the current controller for higher dynamics	📖 125
			0	Normal			
			1	Enhanced			

Code		Possible settings				IMPORTANT	
No.	Designation	Lenze/ {Appl.}	Selection				
C0075	Vp currCTRL	20.0				Proportional gain of current controller (V_{pi}) The upper limit is device-dependent.	📖 125
			0.00	{0.01 Ω}	381.80	ECSxS/P/M/A004	
					190.90	ECSxS/P/M/A008	
					95.46	ECSxS/P/M/A016	
					47.72	ECSxS/P/M/A032	
					31.82	ECSxS/P/M/A048	
					23.86	ECSxS/P/M/A064	
C0076	Tn currCTRL	5.0				Reset time of current controller (T_{ni})	📖 125
			0.01	{0.01 ms}	200.00		
C0077	Vp fieldCTRL	5.0				Field controller gain (V_{pF})	📖 133
			0.00	{0.01}	63.99		
C0078	Tn fieldCTRL	20.0				Field controller reset time (T_{nF})	📖 133
			1.0	{0.5 ms}	6000.0		
C0079	DIS:Lh					Mutual inductance of the asynchronous motor Read only	
			0.0	{0.1 mH}	3276.7		
[C0080]	Res pole no.	1				Number of pole pairs of resolver	
			1	{1}	10		
[C0081]	Mot power	3.20				Rated motor power according to nameplate	
			0.01	{0.01 kW}	500.00		
[C0082]	DIS:Rr					Rotor resistance of the asynchronous motor Read only	
			0.000	{0.001 Ω}	32.767		
C0083	DIS:Tr					Rotor time constant of the asynchronous motor Read only	
			0.00	{0.01 ms}	327.67		
[C0084]	Mot Rs	1.10				Stator resistance of the motor The upper limit is device-dependent.	
			0.00	{0.01 Ω}	95.44	ECSxS/P/M/A004	
					47.72	ECSxS/P/M/A008	
					23.86	ECSxS/P/M/A016	
					11.93	ECSxS/P/M/A032	
					7.95	ECSxS/P/M/A048	
					5.96	ECSxS/P/M/A064	
[C0085]	Mot Ls	5.30				Leakage inductance of the motor	
			0.00	{0.01 mH}	200.00		
[C0087]	Mot speed	3700				Rated motor speed	
			300	{1 rpm}	16000		
[C0088]	Mot current	7.0				Rated motor current	
			0.5	{0.1 A}	500.0		

Code		Possible settings				IMPORTANT	
No.	Designation	Lenze/ {Appl.}	Selection				
[C0089]	Mot frequency	185				Rated motor frequency	
			10	{1 Hz}	1000		
[C0090]	Mot voltage	325				Rated motor voltage	
			50	{1 V}	500		
[C0091]	Mot cos phi	1.0				cos φ of the asynchronous motor	
			0.50	{0.01}	1.00		
C0092	DIS:Isdeff					Magnetising current of the asynchronous motor Only display	
			0.00	{0.01 A}	327.67		
C0093	Drive ident					Device identification of the ECS axis module Read only	
			0	Defective power section			
			1	No power section recognised			
			4	ECSxS/P/M/A004C4			
			8	ECSxS/P/M/A008C4			
			16	ECSxS/P/M/A016C4			
			32	ECSxS/P/M/A032C4			
			48	ECSxS/P/M/A048C4			
			64	ECSxS/P/M/A064C4			
			65	ECSxS/P/M/A064C2			
C0094	Password	0				Keypad password Parameter access protection for the keypad	
			0	{1}	9999	When the password is activated, only the codes of the user menu (C0517) can be accessed. Further possible selections: see C0096	
			0 = no password				
[C0095]	Rotor pos adj	0				Activation of rotor position adjustment of a synchronous motor C0058 shows the rotor displacement angle.	📖 127
			0	Inactive			
			1	Active			
C0096						Extended password protection for bus systems with activated password (C0094) All codes in the user menu can be accessed.	
1	AIF/CAN prot.	0		No access protection		AIF access protection	
2	AIF/CAN prot.	0		No access protection		CAN access protection	
			0	No access protection		Full access	
			1	Write protection		Reading not possible	
			2	Write protection		Writing not possible	
			3	Read/write protection		Reading and writing not possible	
C0097	DIS:Lt-Ident	0				Power stage identification	
			0	{1}	255		
C0098	Set position	0				Home position of encoder	
			-2147483647	{1 inc}	2147483647		

Code		Possible settings				IMPORTANT	
No.	Designation	Lenze/ {Appl.}	Selection				
C0099	S/W version					Firmware version Only display	
			0.0	{0.1}	25.5		
C0105	QSP Tif	0.0				Deceleration time for quick stop (QSP)	📖 303 📖 337
			0.000	{0.001 s}	999.999	Relating to speed variation n_{max} (C0011) ...0 rev./min.	📖 303
C0108						Gain for relative analog signals (AOUT)	📖 325
1	FCODE(gain)	100.0	-199.99	{0.01 %}	199.99	FCODE_nC108_1_a	
2	FCODE(gain)	100.0				FCODE_nC108_2_a	
C0109						Offset for relative analog signals (AOUT)	📖 325
1	FCODE(offset)	0.0	-199.99	{0.01 %}	199.99	FCODE_nC109_1_a	
2	FCODE(offset)	0.0				FCODE_nC109_2_a	
C0110	Service Code					Fine adjustment - mutual inductance	
			50	{1 %}	200		
C0111	Service Code					Fine adjustment - rotor resistance	
			50,00	{1 %}	199,99		
C0112	Service Code					Fine adjustment - rotor time constant	
			50	{1 %}	200		
C0113	Service Code					Fine adjustment - magnetising current (I_{sd})	
			50	{1 %}	200		
C0114						Polarity of the digital inputs	📖 118
1	DIGIN pol	0		HIGH level active		X6/DI1 (DIGIN_bIn1_b)	
2	DIGIN pol	0		HIGH level active		X6/DI2 (DIGIN_bIn2_b)	
3	DIGIN pol	0		HIGH level active		X6/DI3 (DIGIN_bIn3_b)	
4	DIGIN pol	0		HIGH level active		X6/DI4 (DIGIN_bIn4_b)	
			0	HIGH level active			
			1	LOW level active			
C0118						Polarity of the digital outputs	📖 323 📖 118
1	DIGOUT pol	0		HIGH level active		X6/DO1 (DIGOUT_bOut1_b)	
2	DIGOUT pol	0		HIGH level active		X25 (DIGOUT_bRelais_b, brake connection)	
			0	HIGH level active			
			1	LOW level active			
C0120	OC6 limit	105				Threshold for I^2 x t monitoring (motor)	📖 201
			0	{1 %}	120	0 = I^2 x t monitoring is switched off I^2 x t > C0120 ⇨ OC6-TRIP	
C0121	OH7 limit	120				Threshold for motor temperature monitoring	📖 193
			45	{1 °C}	150	Motor temperature > C0121 ⇨ fault message OH7 (C0584)	

Code		Possible settings				IMPORTANT	
No.	Designation	Lenze/ {Appl.}	Selection				
C0122	OH4 limit	80				Threshold for heatsink temperature monitoring	📖 196
			45	{1 °C}	90	Heatsink temperature > C0122 ⇨ fault message OH4 (C0582)	
C0123	OC7 limit	90				Threshold for I x t warning (axis module)	📖 193
			0	{1 %}	100	C0064 > C0123 ⇨ fault message OC7 (C0604)	
C0124	OH5 limit	75				Threshold for temperature monitoring inside the device	📖 197
			10	{1 %}	90	C0062 > C0124 ⇨ fault message OH5 (C0605)	
C0125	Baud rate	0				Baud rate for operation via AIF interface X1	
			0	9600 bit/s		Communication modules on AIF interface X1: ● LECOM-A/B/LI 2102 ● PROFIBUS-DP 213x	
			1	4800 bit/s			
			2	2400 bit/s			
			3	1200 bit/s			
			4	19200 bit/s			
C0126	MONIT CE0	3				Monitoring of the communication via AIF interface X1. ● Under C2382, you can select whether controller inhibit (CINH) or quick stop (QSP) is activated when a CE0 fault occurs.	📖 231
			0	TRIP		A communication error activates the set CE0 response.	
			2	Warning			
			3	Off		Monitoring is switched off.	
C0127	OC8 limit	100				Threshold for I^2 x t warning (motor)	📖 201
			0	{1 %}	120	I^2 x t > C0127 ⇨ fault message OC8 (C0606)	
C0128	Tau motor	5.0				Thermal time constant of the motor	📖 201
			0.5	{0.1 min}	25.0	For calculating the I^2 x t disconnection	

Code		Possible settings				IMPORTANT	
No.	Designation	Lenze/ {Appl.}	Selection				
C0135	Control word	0				System control word DCTRL	
			0	{1}	65535	Controller evaluates information as 16 bits (binary-coded)	
			Bit 0	Not assigned			
			Bit 1	Not assigned			
			Bit 2	Not assigned			
			Bit 3	Quick stop (QSP)			
			Bit 4	Not assigned			
			Bit 5	Not assigned			
			Bit 6	Not assigned			
			Bit 7	Not assigned			
			Bit 8	Operation inhibit (DISABLE)			
			Bit 9	Controller inhibit (CINH)			
			Bit 10	TRIP-SET			
			Bit 11	TRIP-RESET			
			Bit 12	Not assigned			
			Bit 13	Not assigned			
			Bit 14	Not assigned			
			Bit 15	Not assigned			
C0136						Control words Hexadecimal value is bit-coded. Read only	
1	CTRLWORD		0	{hex}	FFFF	Control word C0135	
2	CTRLWORD					CAN control word	
3	CTRLWORD					AIF control word	
C0141	FCODE(setval)	0.0				Main setpoint (FCODE_C141_a)	📖 325
			-199.99	{0.01 %}	199.99		
C0142	Start options	1				Starting condition for start after ● mains connection ● message (t > 0.5 s) ● TRIP	
			0	Protection against unexpected start-up			
			1	Automatic start			

Code		Possible settings			IMPORTANT	
No.	Designation	Lenze/ {Appl.}	Selection			
C0150	Status word	0			DCTRL status word 1 Only display	📖 305
			0	{1} 65535	Controller evaluates information as 16 bits (binary-coded)	
			Bit 0	Not assigned	DCTRL_bStateB0_b	
			Bit 1	Pulse inhibit (IMP)	DCTRL_bImp_b	
			Bit 2	Not assigned	DCTRL_bStateB2_b	
			Bit 3	Not assigned	DCTRL_bStateB3_b	
			Bit 4	Not assigned	DCTRL_bStateB4_b	
			Bit 5	Not assigned	DCTRL_bStateB5_b	
			Bit 6	n = 0	DCTRL_bNActEq0_b	
			Bit 7	Controller inhibit (CINH)	DCTRL_bCInh_b	
			Bit 8	Status code	DCTRL_bStat1_b	
			Bit 9	Status code	DCTRL_bStat2_b	
			Bit 10	Status code	DCTRL_bStat4_b	
			Bit 11	Status code	DCTRL_bStat8_b	
			Bit 12	Warning	DCTRL_bWarn_b	
			Bit 13	Message	DCTRL_bMess_b	
			Bit 14	Not assigned	DCTRL_bStateB14_b	
			Bit 15	Not assigned	DCTRL_bStateB15_b	
C0155	Status word 2	0			Status word 2 (advanced status word) Display only	
			0	{1} 65535	Controller interprets information as 16 bit (binary coded)	
			Bit 0	Active fault		
			Bit 1	M_{max} reached		
			Bit 2	I_{max} reached		
			Bit 3	Pulse inhibit(IMP)		
			Bit 4	Ready for operation (RDY)		
			Bit 5	Controller inhibit (CINH)		
			Bit 6	TRIP active		
			Bit 7	Initialisation		
			Bit 8	Motor direction of rotation (Cw/CCw)		
			Bit 9	Not assigned		
			Bit 10	Not assigned		
			Bit 11	Not assigned		
			Bit 12	Not assigned		
			Bit 13	Not assigned		
			Bit 14	Not assigned		
			Bit 15	Not assigned		

Code		Possible settings			IMPORTANT	
No.	Designation	Lenze/ {Appl.}	Selection			
C0157					Status of free bits of DCTRL status word 1 (C0150) Only display	
1	Stat. FreeBit		0	{1 bit} 1	Bit 0 (DCTRL_bStat_B0_b)	
2	Stat. FreeBit				Bit 2 (DCTRL_bStat_B2_b)	
3	Stat. FreeBit				Bit 3 (DCTRL_bStat_B3_b)	
4	Stat. FreeBit				Bit 4 (DCTRL_bStat_B4_b)	
5	Stat. FreeBit				Bit 5 (DCTRL_bStat_B5_b)	
6	Stat. FreeBit				Bit 14 (DCTRL_bStat_B14_b)	
7	Stat. FreeBit				Bit 15 (DCTRL_bStat_B15_b)	
C0161	Act trip				Current TRIP ● as in C0168/1 ● In case of FAIL-QSP, warning, and message, ”0” is displayed. Only display	📖 218
C0167	Reset failmem	0			Delete history buffer (C0168)	📖 213
			0	No reaction		
			1	Delete history buffer		
C0168					Fault history buffer (list of faults occurred) Read only	📖 213
1	Fail number				Currently active fault	
2	Fail number				Last fault	
3	Fail number				Last fault but one	
4	Fail number				Last fault but two	
5	Fail number				Last fault but three	
6	Fail number				Last fault but four	
7	Fail number				Last fault but five	
8	Fail number				Last fault but six	
			All fault indications (TRIP, FAIL-QSP, warning, message)			
C0169					Time at which the faults entered into the history buffer (C0168) occurred Only display	📖 213
1	Failtime		Respective power-on time (C0179)		Currently active	
2	Failtime				Last	
3	Failtime				Last but one	
4	Failtime				Last but two	
5	Failtime				Last but three	
6	Failtime				Last but four	
7	Failtime				Last but five	
8	Failtime				Last but six	
			0	{1 h} 65535		

Code		Possible settings			IMPORTANT	
No.	Designation	Lenze/ {Appl.}	Selection			
C0170					Frequency of successive occurrence of the faults entered in the history buffer (C0168) Read only	📖 213
			0	{1} 65535		
1	Counter				Currently active	
2	Counter				Last	
3	Counter				Last but one	
4	Counter				Last but two	
5	Counter				Last but three	
6	Counter				Last but four	
7	Counter				Last but five	
8	Counter				Last but six	
C0173	UG limit	11			Adaptation of the DC-bus voltage thresholds: ● Check during commissioning and adapt, if necessary. ● All drive components in DC bus connections must have the same thresholds. – LU = Undervoltage threshold – OU = Overvoltage threshold	📖 96
			0	Mains = 230 V ± B	Operation on 230 V mains with or without brake unit LU = 130 V, OU = 400 V	
			1	Mains = 400 V ± B	Operation on 400 V mains with or without brake unit LU = 285 V, OU = 800 V	
			2	Mains = 460 V ± B	Operation on 460 V mains with or without brake unit LU = 328 V, OU = 800 V	
			3	Mains = 480V - B	Operation on 480 V mains without brake unit LU = 342 V, OU = 800 V	
			4	Mains = 480V + B	Operation on 480 V mains with brake unit LU = 342 V, OU = 800 V	
			10	Mains = 230 V ± B	Operation on 230 V mains with or without brake unit LU = C0174, OU = 400 V	
			11	Mains = 400 V ± B	Operation on 400 V mains with or without brake unit LU = C0174, OU = 800 V	
			12	Mains = 460 V ± B	Operation on 460 V mains with or without brake unit LU = C0174, OU = 800 V	
			13	Mains = 480V - B	Operation on 480 V mains without brake unit LU = C0174, OU = 800 V	
			14	Mains = 480V + B	Operation on 480 V mains with brake unit LU = C0174, OU = 800 V	

Code		Possible settings					IMPORTANT	
No.	Designation	Lenze/ {Appl.}	Selection					
C0174	UG min	60					Undervoltage threshold of DC bus (LU)	📖 96
			15		{1 V}	342		
C0175	UG-Relais Fkt	1					Charge relay behaviour with undervoltage (LU) in the DC bus.	📖 96
			1	Standard			Relay switches as a function of LU.	
			2	One Time			Relay switches when LU is exceeded for the first time and remains on.	
			3	Fixed On			Charging current limitation is inactive. ● Relay is always switched on and the charging resistors of the axis module are thus permanently jumpered. ● Setting for operation with ECSxE power supply module.	
C0178	Op timer						Running time meter Read only	
			0		{1 sec}	4294967295	Time when the controller was enabled	
C0179	Mains timer						Power-on time meter Only display	
			0		{1 sec}	4294967295	Time when the mains was switched on	

Code		Possible settings			IMPORTANT
No.	Designation	Lenze/ {Appl.}	Selection		
C0183	Diagnostics				Drive diagnostics Read only ● Indicates fault or status information ● If several fault or status information are to be shown at the same time, the information with the smallest number is displayed
			0	OK	No fault
			101	Initialisation phase	
			102	TRIP/trouble	
			103	Emergency stop activated	
			104	IMP message	
			105	Power off	
			111	Operation inhibit C0135	
			112	Operation inhibit AIF	
			113	Operation inhibit CAN	
			121	Controller inhibit via X6/SI1	
			122	Internal controller inhibit 1	
			123	Internal controller inhibit 2	
			124	Controller inhibit via STOP key of the keypad	
			125	Controller inhibit via AIF	
			126	Controller inhibit via CAN	
			131	Fail QSP	
			141	Restart protection	
			142	Pulse inhibit	High resistance power outputs
			151	Quick stop (QSP) via terminal	
			152	Quick stop (QSP) via STOP key of the keypad	
			153	Quick stop (QSP) via AIF	
			154	Quick stop (QSP) via CAN	
			160	PLC Stop	PLC must be started.
			250	Warning	
C0199	BuildNumber				Software identification Only display
C0200	S/W Id				Software identification Only display
C0201	S/W date				Software release date Only display
C0202					Service code Only display
1					Product code 1
...					...
4					Product code 4
C0203	Komm.-No.		x / xxxx / xxxxx		Commission number Only display
C0204	Serial No.				Serial number Only display

Code		Possible settings				IMPORTANT	
No.	Designation	Lenze/ {Appl.}	Selection				
C0205	PLC Target ID					Identification key Only display	
C0206	Product. date					Production date Only display	
C0207	DL info 1					Download info 1 Only display	
C0208	DL info 2					Download info 2 Only display	
C0209	DL info 3					Download info 3 Only display	
C0250	FCODE 1 Bit	0				Freely selectable digital signal (1 bit)	📖 325
			0		1		
C0254	Vp angle CTRL	0.4000				Phase controller gain (V_p)	📖 336
			0.0000	{ 0.0001}	3.9999		
C0300 ... C0302	Service Codes					**Only the Lenze service is allowed to make changes!**	
C0304 ... C0310	Service Codes					**Only the Lenze service is allowed to make changes!**	
C0349						Status of the DIP switch for CAN bus interface X4 Read only	
1	CAN DIP-SW		0	{1}	63	Node address set on the DIP switch	
2	CAN DIP-SW		0		4	For setting the DIP switches > 4, the display is set to 0.	
C0350	CAN address	32				Node address for CAN bus interface X4 ● This code is not active if one of the switches 2 ... 7 of the DIP switch is set to "ON". (📖 161) ● After the setting, a reset node is required.	📖 161 📖 426
			1	{1}	63		
C0351	CAN baud rate	0				Baud rate for CAN bus interface X4 ● The baud rate must be set identically for all CAN nodes. ● This code is not active if one of the switches 2 ... 7 of the DIP switch is set to "ON". ● After the setting, a reset node is required.	📖 161
			0	500 kbit/s			
			1	250 kbit/s			
			2	125 kbit/s			
			3	50 kbit/s			
			4	1000 kbit/s			
C0352	CAN mst	0				Master/slave configuration for CAN bus interface X4	📖 167
			0	Slave		CAN boot-up is not active	
			1	Master		CAN boot up is active	
			2	Master with node guarding			
			3	Slave and heartbeat producer			
			4	Slave with node guarding			

Code		Possible settings				IMPORTANT	
No.	Designation	Lenze/ {Appl.}	Selection				
C0353						Source for node address of CAN_IN/CAN_OUT (CAN bus interface X4)	
1	CAN addr sel	0		CAN node address (C0350)		Address CAN1_IN/OUT	
2	CAN addr sel	0		CAN node address (C0350)		Address CAN2_IN/OUT	
3	CAN addr sel	0		CAN node address (C0350)		Address CAN3_IN/OUT	
			0	C0350 (auto)		Automatically determined by C0350.	
			1	C0354 (man.)		Determined by C0354.	
C0354						Alternative node addresses for CAN_IN/CAN_OUT (CAN bus interface X4)	
1	CAN addr.	129	1	{1}	512	Address 2 CAN1_IN	
2	CAN addr.	1				Address 2 CAN1_OUT	
3	CAN addr.	257				Address 2 CAN2_IN	
4	CAN addr.	258				Address 2 CAN2_OUT	
5	CAN addr.	385				Address 2 CAN3_IN	
6	CAN addr.	386				Address 2 CAN3_OUT	
C0355						Identifier for CAN_IN/CAN_OUT (CAN bus interface X4) Read only	📖 426
1	CAN Id		1	{1}	2047	Identifier CAN1_IN	
2	CAN Id					Identifier CAN1_OUT	
3	CAN Id					Identifier CAN2_IN	
4	CAN Id					Identifier CAN2_OUT	
5	CAN Id					Identifier CAN3_IN	
6	CAN Id					Identifier CAN3_OUT	
C0356						CAN time settings for CAN bus interface X4	📖 168
1	CAN times	3000	0	{1 ms}	65000	CAN boot-up time: Delay time after mains connection for initialisation by the master.	
2	CAN times	0				CAN2_OUT/CAN3_OUT cycle times: Factor for the task time to send process data telegram. 0 = Event-controlled transmission	
3	CAN times	0					
4	CAN times	20				CAN2_OUT/CAN3_OUT delay time When the NMT state ”Operational” has been reached (after ”Pre-operational”), the delay time ”CANdelay” is started. After the delay time has expired, the PDOs CAN2_OUT and CAN3_OUT are sent for the first time.	
C0357						Monitoring time for CAN1...3_IN (CAN bus interface X4)	📖 191
1	CE monit time	3000	1	{1 ms}	65000	CE1 monitoring time	
2	CE monit time	3000				CE2 monitoring time	
3	CE monit time	3000				CE3 monitoring time	

Code		Possible settings			IMPORTANT	
No.	Designation	Lenze/ {Appl.}	Selection			
C0358	Reset node	0			Execute reset node (CAN bus interface X4)	📖 255
			0	No function		
			1	CAN reset		
C0359	CAN state				CAN bus status (interface X4) Only display	
			0	Operational		
			1	Pre-operational		
			2	Warning		
			3	Bus off		
			4	Stopped		
C0360					Telegram counter CAN_IN/CAN_OUT (CAN bus interface X4), number of telegrams Read only	
1	CAN Messages		0 {1} 65535		All sent telegrams	
2	CAN Messages		With a count value > 65535 the counter restarts with 0		All received telegrams	
3	CAN Messages				Sent to CAN1_OUT	
4	CAN Messages				Sent to CAN2_OUT	
5	CAN Messages				Sent to CAN3_OUT	
6	CAN Messages				Sent on parameter data channel 1	
7	CAN Messages				Sent on parameter data channel 2	
8	CAN Messages				Received from CAN1_IN	
9	CAN Messages				Received from CAN2_IN	
10	CAN Messages				Received from CAN3_IN	
11	CAN Messages				Received from parameter data channel 1	
12	CAN Messages				Received from parameter data channel 2	

Code		Possible settings				IMPORTANT	
No.	Designation	Lenze/ {Appl.}	Selection				
C0361						Detected load CAN_IN/CAN_OUT (CAN bus interface X4) Read only **A faultless operation is only guaranteed if the total bus load of all connected nodes amounts to a value ≤ 80 %.**	
1	Load IN/OUT		0	{1 %}	100	All sent telegrams	
2	Load IN/OUT					All received telegrams	
3	Load IN/OUT					Sent to CAN1_OUT	
4	Load IN/OUT					Sent to CAN2_OUT	
5	Load IN/OUT					Sent to CAN3_OUT	
6	Load IN/OUT					Sent on parameter data channel 1	
7	Load IN/OUT					Sent on parameter data channel 2	
8	Load IN/OUT					Received from CAN1_IN	
9	Load IN/OUT					Received from CAN2_IN	
10	Load IN/OUT					Received from CAN3_IN	
11	Load IN/OUT					Received from parameter data channel 1	
12	Load IN/OUT					Received from parameter data channel 2	
C0362	Sync cycle					Time interval between two Sync telegrams via CAN bus interface X4 Read only	📖 257
			1	{1 ms}	30		
C0363	Sync correct.	1				CAN sync correction increment	📖 259
			1	0.2 µs/ms			
			2	0.4 µs/ms			
			3	0.6 µs/ms			
			4	0.8 µs/ms			
			5	1.0 µs/ms			
C0365	DIS:CAN active					Input signal CAN active Only display	
			0	CAN not active			
			1	CAN active			
C0366	Sync Response	1				CAN sync response for CAN bus interface X4	📖 260
			0	No response			
			1	Response			
C0367	Sync Rx ID	128				CAN sync receipt ID for CAN bus interface X4	📖 259
			1	{1}	256		
C0368	Sync Tx ID	128				Sync transmission ID for CAN bus interface X4	📖 412 📖 171
			1	{1}	256		

Code		Possible settings				IMPORTANT	
No.	Designation	Lenze/ {Appl.}	Selection				
C0369	SyNc Tx time	0				CAN sync transmission cycle for CAN bus interface X4 A sync telegram with the identifier of C0368 is sent with the cycle time set. **ECSxP:** The setting is effected automatically depending on C4062!	📖 258
			0	{1 ms}	65000	0 = switched off	
[C0370]	SDO Gateway	0				Gateway address Activating remote parameter setting ● When selecting a setting ≠0, all code read/write accesses will be redirected to the system bus device with the corresponding CAN node address. ● The respective code is accessed via parameter data channel 1 of the target device.	
			0	{1}	63	0 = remote parameterisation deactivated	
C0371	Gateway Ch.	1				Selection of the gateway channel	
			0	CAN		Use CAN bus interface X4	
			1	CAN-AUX		Use CAN bus interface X14	
C0381	HeartProdTime	0				Heartbeat (slave): HeartbeatProducerTime ● Time interval for sending the heartbeat message ● Only relevant for setting C0352 = 3.	
			0	{1 ms}	65535		
C0382	GuardTime	0				Node Guarding (slave): NodeGuardTime ● Time interval of the status inquiry of the master. ● Only relevant if C0352 = 4.	
			0	{1 ms}	65535		
C0383	LifeTimeFact	0				Node Guarding (slave): NodeLifeTime factor ● Factor for the monitoring time of NodeLifeTime ● NodeLifeTime = C0383 x C0382 (NodeGuardTime) ● Only relevant if C0352 = 4.	
			0	{1}	255		
C0384	Err NodeGuard	3				Node Guarding (slave) ● Response for the occurrence of a NodeGuard-Event ● Only relevant for setting C0352 = 4.	
			0	TRIP			
			1	Message			
			2	Warning			
			3	Off			
			4	FAIL-QSP			

Code		Possible settings				IMPORTANT	
No.	Designation	Lenze/ {Appl.}	Selection				
C0400	DIS: AnalogIn					Signal at the analog input Read only	
			-199.99	{0.01 %}	199.99		
C0414	DIS: ResQual.					Resolver modulation Quality of the resolver excitation amplitude set under C0416 (recommendation: 0.5 ... 1.2; ideal 1.0)	📖 101
			0.00	{0,01}	1.60		
[C0416]	Resolver adj.	5				Resolver excitation amplitude	📖 101
			0	100 %			
			1	80 %			
			2	68 %			
			3	58 %			
			4	50 %			
			5	45 %			
			6	40 %			
			7	37 %			
[C0417]	Resolver cor.	0				Resolver adjustment	📖 136
			0	Ready			
			1	Start adjustment			
			2	Loading default values			
[C0418]	Test Cur.Ctrl	0				Controller adjustment:	📖 125
			0	Deactivated		Deactivate test mode	
			1	Activated		Activate test mode	

Code		Possible settings			IMPORTANT	
No.	Designation	Lenze/ {Appl.}	Selection			
[C0419]	Enc. Setup	110			Encoder selection ● Selection of encoder type indicated on the nameplate of the Lenze motor. ● The encoder data (C0420, C0421, C0427) is set automatically in accordance with the selection.	📖 309 📖 104 📖 110
			0	Common		
			110	IT512-5V	Incremental encoder with TTL level	
			111	IT1024-5V		
			112	IT2048-5V		
			113	IT4096-5V		
			210	IS512-5V	SinCos encoder	
			211	IS1024-5V		
			212	IS2048-5V		
			213	IS4096-5V		
			307	AS64-8V	SinCos absolute value encoder with Hiperface® interface (single-turn) Selections 307, 308, 309 are only possible with operating system 7.0 or higher.	
			308	AS128-8V		
			309	AS256-8V		
			310	AS512-8V		
			311	AS1024-8V		
			407	AM64-8V	SinCos absolute value encoder with Hiperface® interface (multi-turn) Selections 407, 408, 409 are only possible with operating system 7.0 or higher.	
			408	AM128-8V		
			409	AM256-8V		
			410	AM512-8V		
			411	AM1024-8V		
[C0420]	Encoder const.	512			Number of increments of the encoder	📖 309 📖 104 📖 110
			1	{1 inc/rev} 8192	Sets C0419 = 0 (”common”) if the value is altered.	
[C0421]	Encoder volt	0			Encoder voltage	📖 309 📖 104 📖 110
			0	5.0 V	Sets C0419 = 0 (”common”) if the value is altered.	
			1	5.6 V		
			2	6.3 V		
			3	6.9 V		
			4	7.5 V		
			5	8.1 V		
C0426	DIS: In				Signal at DFIN input Only display	📖 309
			-32767	{1 rpm} 32767		
[C0427]	Enc. signal	0			Function of the master frequency input signals on X8 (DFIN)	📖 309 📖 104 📖 110
			0	2-phase		
			1	A: speed B: direction		
			2	A or B: speed or direction		

Code		Possible settings			IMPORTANT	
No.	Designation	Lenze/ {Appl.}	Selection			
C0428	DFIN TP sel.	0			DFIN touch probe signal source	📖 313 📖 309
			0	Zero pulse of position encoder (C0490)	X7/X8	
			1	Touch probe input TP1	X6/DI1	
			2	Zero pulse of digital frequency input	X8	
C0429	TP1 delay	0			DFIN dead time compensation TP1 (DI1)	📖 313 📖 309
			-32767	{1 inc} 32767		
C0431	DFIN TP Edge	0			DFIN touch probe TP1 edge (for touch probe via digital input X6/DI1 (C0428 = 1))	📖 313
			0	Rising edge TP1		
			1	Falling edge TP1		
			2	Rising and falling edge TP1		
			3	Switched off		
C0443	DIS: DIGIN				Signal status of the digital inputs on X6 after consideration of the polarity set under C0114. Only display	📖 321
			0	{1} 255		
			Bit 0	DIGIN1	X6/DI1	
			Bit 1	DIGIN2	X6/DI2	
			Bit 2	DIGIN3	X6/DI3	
			Bit 3	DIGIN4	X6/DI4	
			Bit 4	DIGIN_safe_standstill	X6/SI2 0: Pulse inhibit is active 1: Pulse inhibit is inactive	📖 69
			Bit 5	Free		
			Bit 6	DIGIN_CInh	X6/SI1 0: Controller is inhibited (CINH) 1: Controller is enabled	📖 69
			Bit 7	Free		
C0444					Status of the digital outputs Only display	📖 323
1	DIS: DIGOUT		0	1	Status of the digital output X6/DO1	
2	DIS: DIGOUT				Relay control status	
[C0469]	Fct STP key	2			Function of the STOP key of the keypad **Must not be changed if the "STOP" key is pressed!**	
			0	Inactive	Without function	
			1	Controller inhibit (CINH)		
			2	Quick stop (QSP)		

Code		Possible settings				IMPORTANT	
No.	Designation	Lenze/ {Appl.}	Selection				
C0470						Freely configurable code for digital signals Hexadecimal value is bit-coded.	📖 325
1	FCODE 8bit	0	00	{hex}	FF	C0470/1 = C0471, bit 0 ... 7	
2	FCODE 8bit	0				C0470/2 = C0471, bit 8 ... 15	
3	FCODE 8bit	0				C0470/3 = C0471, bit 16 ... 23	
4	FCODE 8bit	0				C0470/4 = C0471, bit 24 ... 31	
C0471	FCODE 32bit	0				Hexadecimal 32-bit interpretation of C0470	📖 325
			0	{1}	4294967295		
C0472	FCODE analog					Freely configurable code for relative analog signals	📖 325
1		0.0	-199.99	{0.01 %}	199.99	FCODE_bC472_1_a	
2		0.0				FCODE_bC472_2_a	
3		100.0				FCODE_bC472_3_a	
4		0.0				FCODE_bC472_4_a	
...		...				...	
20		0.0				FCODE_bC472_20_a	
C0473						Freely configurable code for absolute analog signals	📖 325
1	FCODE abs	1	-32767	{1}	32767		
2	FCODE abs	1					
3	FCODE abs	0					
...	...	...					
10	FCODE abs	0					
C0474						Freely configurable code for phase signals	📖 325
1	FCODE PH	0	-2147483647	{1}	2147483647		
...	...	...					
5	FCODE PH	0					
C0475						Freely configurable code for phase difference signals	📖 325
1	FCODE DF	0	-16000	{1 rpm}	16000		
2	FCODE DF	0					
[C0490]	Feedback pos	0				Selection of feedback system for positioning control	📖 101
			0	Resolver at X7		Standard setting	
			1	TTL encoder at X8		• Sets C0495 to the same value if C0495 > 0. • Sets C0419 = 0 (”Common”) if a different encoder type as under C0419 is set here.	
			2	SinCos encoder at X8			
			3	Absolute value encoder (single-turn) at X8			
			4	Absolute encoder (multi-turn) at X8			
[C0491]	X8 in/out	0				Function of X8	📖 309 📖 104 📖 110
			0	X8 is input			
			1	X8 is output			

Code		Possible settings				IMPORTANT	
No.	Designation	Lenze/ {Appl.}	Selection				
[C0495]	Feedback n	0				Selection of feedback system for speed control	📖 101
			0	Resolver at X7		Standard setting	
			1	TTL encoder at X8		● Sets C0490 to the same value if C0490 > 0. ● Sets C0419 = 0 (”Common”) if a different encoder type as under C0419 is set here.	
			2	SinCos encoder at X8			
			3	Absolute value encoder (single-turn) at X8			
			4	Absolute encoder (multi-turn) at X8			
C0497	Nact filter	2.0				Time constant of actual speed value	
			0.0	{0.1 ms}	50.0	0.0 ms = switched off	
C0504						Activate/deactivate write protection for RAM memory ● In case of activated write protection, writing on the RAM memory via codes or functions from the function library **LenzeMemDrv.lib** not possible.	📖 356
1		0	0	Write protection RAM block 1 inactive			
			1	Write protection RAM block 1 active			
2		0	0	Write protection RAM block 2 inactive			
			1	Write protection RAM block 2 active			
C0505		0				Offset address within the RAM block selected via C0506	📖 356
			0	{1}	65532		
C0506		1				Selection of the RAM block for access via C0509	📖 356
			1	RAM block 1			
			2	RAM block 2			
C0507		0				Value read from the RAM block ● After reading, the pointer to the memory address is automatically incremented by 4 bytes.	📖 356
			0	{1}	65532		
C0508		0				Value to be written into the RAM block ● After writing, the pointer to the memory address is automatically incremented by 4 bytes.	📖 356
			0	{1}	65532		
C0509	CmpChecksRam	0				Check sum verification	📖 356
			0	Inactive		Stop the PLC during the check sum verification to avoid a time-out when reading back the code.	
			1	Active			
C0510	ProtAppFlash	0				Write-protection application FLASH	
			0	No write protection			
			1	Write protection is active			
C0517						User menu with up to 32 entries	

Code		Possible settings				IMPORTANT	
No.	Designation	Lenze/ {Appl.}	Selection				
			0.00	{0.01}	7999.00	● Enter the numbers of the required codes into the subcodes. Format: xxxx.yy – xxxx = code number – yy = subcode of the code ● It is not checked whether the entered code exists.	
1	User menu	51.00	C0051	MCTRL-NACT		Display of actual speed	
2	User menu	54.00	C0054	Imot		Display of motor current	
3	User menu	56.00	C0056	MCTRL-MSET2		Display of torque setpoint	
4	User menu	0.00		Not assigned			
5	User menu	0.00		Not assigned			
6	User menu	183.00	C0183	Diagnostics		Display for diagnostics	
7	User menu	168.01	C0183	Fail number		Display of current fault message	
8	User menu	0.00		Not assigned			
9	User menu	22.00	C0022	Imax current		Input of maximum output current	
10	User menu	0.00		Not assigned			
11	User menu	11.00	C0011	Nmax		Input of the maximum speed	
12	User menu	0.00		Not assigned			
13	User menu	0.00		Not assigned			
14	User menu	105.00	C0105	QSP Tif		Input of quick stop deceleration time	
15	User menu	0.00		Not assigned			
16	User menu	70.00	C0070	Vp speed CTRL		Input of speed controller gain (Vp)	
17	User menu	71.00	C0071	Tn speed CTRL		Input of speed controller reset time (Tn)	
18	User menu	0.00		Not assigned			
19	User menu	2100.00	C2100	Time slice		Input of time dial for cycl. task	
20	User menu	2102.00	C2102	Task switch		Selection of the switching function for cycl. task	
21	User menu	2104.00	C2104	PLC autorun		Autom. start of the PLC program after mains power-up	
22	User menu	2106.00	C2106	Download protect		Write protection of the PLC program	
23	User menu	2108.00	C2108	PLC run/stop		Control of the PLC program	
24	User menu	2111.00	C2111	GDC ID		Creation date of the PLC program	
25	User menu	2113.00	C2113	PLC prog name		Name of the PLC program	
26	User menu	2115.00	C2115	T-fct Credit		Number of technology units	
27	User menu	0.00		Not assigned			
28	User menu	0.00		Not assigned			
29	User menu	0.00		Not assigned			
30	User menu	0.00		Not assigned			
31	User menu	94.00	C0094	Password		Parameter access protection for the keypad	
32	User menu	3.00	C0003	Par save		Save parameter set	
[C0540]	X8 Signal out	2				Function of the digital frequency output signals on X8 (DFOUT)	📖 101

Code		Possible settings				IMPORTANT	
No.	Designation	Lenze/ {Appl.}	Selection				
			0	DFOUT in [%]			
			1	DFOUT in [rpm]			
			2	Encoder simulation + zero pulse → DFOUT			
C0545	PH offset	0				Phase offset	📖 318
			0	{1 inc}	65535	1 revolution = 65535 increments	
C0547	DIS: AN-IN					Analog signal on the input of the DFOUT block Read only	📖 318
			-199.99	{0.00 %}	199.99		
C0549	DIS: DF-IN					Speed on the input of the DFOUT block Only display	📖 318
			-32767	{1 rpm}	32767		
C0559	SD8 filter t	1				Filter time constant (SD8)	
			1	{1 ms}	200	Example: If the setting is ”10 ms”, a SD8-TRIP is actuated after 10 ms.	
C0576	nErr Window	100				Monitoring window of the speed control error referring to n_{max}. 100 % = lowest monitoring sensitivity	📖 210
			0	{1 %}	100		
C0577	Vp fld weak	0.100				Gain of the field weakening controller (V_p)	📖 133
			0.000	{0.001}	63.999		
C0578	Tn fld weak	3.0				Integral-action time of the field weakening controller (V_n)	
			0.1	{0.1 ms}	6000.0		
C0579	Monit nErr	3				Configuration of speed control error monitoring	📖 210
			0	TRIP			
			1	Message			
			2	Warning			
			3	Off			
			4	FAIL-QSP			
C0580	Monit SD8	3				Configuration of open-circuit monitoring for sin/cos encoders	📖 208
			0	TRIP			
			3	Off			
C0581	MONIT EEr	0				Configuration of external fault monitoring ”ExternalFault” (FWM EEr)	📖 304
			0	TRIP			
			1	Message			
			2	Warning			
			3	Off			
			4	FAIL-QSP			

Code		Possible settings		IMPORTANT	
No.	Designation	Lenze/ {Appl.}	Selection		
C0582	MONIT OH4	2		Configuration of heatsink temperature monitoring Set threshold in C0122	📖 196
			0 TRIP		
			2 Warning		
			3 Off		
C0583	MONIT OH3	0		Configuration of motor temperature monitoring via resolver input X7 or encoder input X8	📖 193
			0 TRIP		
			2 Warning		
			3 Off		
C0584	MONIT OH7	2		Configuration of motor temperature monitoring via resolver input X7 or encoder input X8 Set threshold in C0121	📖 193
			0 TRIP		
			2 Warning		
			3 Off		
C0586	MONIT SD2	0		Configuration of monitoring Resolver ”ResolverFault” (MCTRL Sd2)	📖 206
			0 TRIP		
			2 Warning		
			3 Off		
C0588	MONIT H10/H11	0		Configuration of monitoring Thermal sensors (H10, H11) in the controller ”SensFaultTht/SensFaultTid” (FWM H10/H11)	📖 198
			0 TRIP		
			2 Warning		
			3 Off		
C0591	MONIT CE1	3		Configuration of monitoring CAN1_IN error ”CommErrCANIN1” (CE1)	📖 191
			0 TRIP		
			2 Warning		
			3 Off		
C0592	MONIT CE2	3		Configuration of monitoring CAN2_IN error ”CommErrCANIN2” (CE2)	📖 191
			0 TRIP		
			2 Warning		
			3 Off		

Code		Possible settings				IMPORTANT	
No.	Designation	Lenze/ {Appl.}	Selection				
C0593	MONIT CE3	3				Configuration of monitoring CAN3_IN error ”CommErrCANIN3” (CE3)	📖 191
			0	TRIP			
			2	Warning			
			3	Off			
C0594	MONIT SD6	3				Configuration of monitoring Motor temperature sensor ” SensorFault” (MCTRL Sd6)	📖 207
			0	TRIP			
			2	Warning			
			3	Off			
C0595	MONIT CE4	3				Configuration of ”system bus (CAN) off” monitoring at the CAN bus interface X4 ”BusOffState” (CE4)	📖 191
			0	TRIP			
			2	Warning			
			3	Off			
C0596	NMAX limit	5500				Monitoring: Maximum speed of the machine	📖 211
			0	{1 rpm}	16000		
C0597	MONIT LP1	3				Configuration of motor phase monitoring (LP1) **When this monitoring function is activated, the calculating time which is provided to the user is reduced!**	📖 205
			0	TRIP			
			2	Warning			
			3	Off			
C0598	MONIT SD5	3				Configuration of master current monitoring at X6 < 2 mA ”MastISourceDef”	📖 251
			0	TRIP			
			2	Warning			
			3	Off			
C0599	Limit LP1	5.0				Monitoring limit for motor phase monitoring (LP1) referred to the current limit.	📖 205
			0.01	{0.01 %}	10.00		
C0602	MONIT REL1	3				Configuration of the open circuit monitoring of relay output X25	
			0	TRIP			
			3	Off			

Code		Possible settings			IMPORTANT	
No.	Designation	Lenze/ {Appl.}	Selection			
C0603	MONIT CE5	3			Configuration of gateway function monitoring (CE5) ”Time-out” when remote parameter setting is activated (C0370)	📖 191
			0	TRIP		
			2	Warning		
			3	Off		
C0604	MONIT OC7	2			Configuration of early warning I x t threshold (C0123)	📖 193
			0	TRIP		
			2	Warning		
			3	Off		
C0605	MONIT OH5	2			Configuration of early warning of temperature inside the device (threshold in C0124)	📖 197
			0	TRIP		
			2	Warning		
			3	Off		
C0606	MONIT OC8	2			Configuration of I^2 x t early warning (threshold in C0120)	📖 201
			0	TRIP		
			2	Warning		
			3	Off		
C0607	MONIT NMAX	0			Configuration of maximum speed monitoring	
			0	TRIP		
			2	Warning		
			3	Off		
C0608	ovr. Tx-Queue	2			Fault configuration Transmission memory overflow of free CAN objects	
			0	TRIP		
			1	Message		
			2	Warning		
			3	Off		
			4	Fail-QSP		
C0609	ovr. Rx-Isr	0			Fault configuration Receipt memory overflow of free CAN objects	
			0	TRIP		
			4	Fail-QSP		
C0855					Digital process data input words are indicated on the AIF interface (AIF1_IN) Hexadecimal value is bit-coded. Read only	📖 235
1	AIF1 IN bits		0000	{hex} FFFF	Input word 2 (bit 0 ... 15)	
2	AIF1 IN bits				Input word 3 (bit 0 ... 15)	

Code		Possible settings				IMPORTANT	
No.	Designation	Lenze/ {Appl.}	Selection				
C0856						Analog process data input words are indicated decimally on the AIF interface (AIF1_IN) 100.00% = 16384 Read only	📖 235
1	AIF1 IN words		-199.99	{0.01 %}	199.99	Input word 1	
2	AIF1 IN words					Input word 2	
3	AIF1 IN words					Input word 3	
C0857	AIF1 IN phi					32 bits of phase information on the AIF interface (AIF1_IN) Read only	📖 235
			-2147483648	{1}	2147483647		
C0858						Analog process data output words are indicated decimally on the AIF interface (AIF1_OUT) 100.00% = 16384 Read only	📖 240
1	AIF1 OUT words		-199.99	{0.01 %}	199.99	Output word 1	
2	AIF1 OUT words					Output word 2	
3	AIF1 OUT words					Output word 3	
C0859	AIF1 OUT phi					32-bit phase information at the AIF interface (AIF1_OUT) Only display	📖 240
			-2147483648	{1}	2147483647		
C0863						Digital process data input words for CAN bus interface X4 Hexadecimal value is bit-coded. Read only	📖 415
			0000	{hex}	FFFF		
1	CAN IN bits		Bit 0	...	Bit15	CAN1_IN: Process data input word 1	
2	CAN IN bits		Bit 16	...	Bit 31	CAN1_IN: Process data input word 2	
3	CAN IN bits		Bit 0	...	Bit15	CAN2_IN: Process data input word 1	
4	CAN IN bits		Bit 16	...	Bit 31	CAN2_IN: Process data input word 2	
5	CAN IN bits		Bit 0	...	Bit15	CAN3_IN: Process data input word 1	
6	CAN IN bits		Bit 16	...	Bit 31	CAN3_IN: Process data input word 2	

Code		Possible settings				IMPORTANT	
No.	Designation	Lenze/ {Appl.}	Selection				
C0866						Analog process data input words (decimal) for CAN bus interface X4 100.00% = 16384 Read only	415
1	CAN IN words		-199.99	{0.01 %}	199.99	CAN1_IN word 1	
2	CAN IN words					CAN1_IN word 2	
3	CAN IN words					CAN1_IN word 3	
4	CAN IN words					CAN2_IN word 1	
5	CAN IN words					CAN2_IN word 2	
6	CAN IN words					CAN2_IN word 3	
7	CAN IN words					CAN2_IN word 4	
8	CAN IN words					CAN3_IN word 1	
9	CAN IN words					CAN3_IN word 2	
10	CAN IN words					CAN3_IN word 3	
11	CAN IN words					CAN3_IN word 4	
C0867						32-bit phase information for CAN bus interface X4 Read only	
1	CAN IN phi		-2147483648	{1}	2147483647	CAN1_IN	
2	CAN IN phi					CAN2_IN	
3	CAN IN phi					CAN3_IN	
C0868	DIS:OUTx.Wx					Analog process data output words (decimal) for CAN bus interface X4 100.00% = 16384 Read only	
1	CAN OUT words		-32768	{1 %}	32768	CAN1_OUT word 1	
2	CAN OUT words					CAN1_OUT word 2	
3	CAN OUT words					CAN1_OUT word 3	
4	CAN OUT words					CAN2_OUT word 1	
5	CAN OUT words					CAN2_OUT word 2	
6	CAN OUT words					CAN2_OUT word 3	
7	CAN OUT words					CAN2_OUT word 4	
8	CAN OUT words					CAN3_OUT word 1	
9	CAN OUT words					CAN3_OUT word 2	
10	CAN OUT words					CAN3_OUT word 3	
11	CAN OUT words					CAN3_OUT word 4	

Code		Possible settings					IMPORTANT	
No.	Designation	Lenze/ {Appl.}	Selection					
C0869							32-bit phase information for CAN bus interface X4 Read only	
1	CAN OUT phi		-2147483648	{1}	2147483647		CAN1_OUT	
2	CAN OUT phi						CAN2_OUT	
3	CAN OUT phi						CAN3_OUT	
C0878							Digital input signals to DCTRL Only display	📖 300
1	DigInOfDCTRL		0		1		Controller inhibit (CINH) 1	
2	DigInOfDCTRL						Controller inhibit (CINH) 2	
3	DigInOfDCTRL						TRIP-set	
4	DigInOfDCTRL						TRIP-RESET	
C0879								
1	Reset C0135 Controlword	0		No reset			Reset DCTRL control word of C0135	
2	Reset AIF Controlword	0		No reset			Reset DCTRL control word of AIF	
3	Reset CAN Controlword	0		No reset			Reset DCTRL control word of CAN	
			0	No reset				
			1	Reset			Performs one ”reset”	
C0906							Analog input signals to MCTRL Read only	
1	MCTRL analog		-199.99	{0.01 %}	199.99		Speed controller input	
2	MCTRL analog						Torque setpoint	
3	MCTRL analog						Lower torque limit	
4	MCTRL analog						Upper torque limit	
5	MCTRL analog						Limit of the position controller	
6	MCTRL analog						Speed for activating the torque limitation	
7	MCTRL analog						Field weakening	
8	MCTRL analog						Integrator of the speed controller	
9	MCTRL analog						P adaptation of the position controller	
C0907							Digital input signals to MCTRL Only display	
1	MCTRL digital		0		1		Activating position controller	
2	MCTRL digital						Speed control or torque control	
3	MCTRL digital						Set quick stop (QSP)	
4	MCTRL digital						Loading integral-action component of the speed controller	
C0908	MCTRL PosSet						Set phase signal 1 revolution = 65536 increments Only display	
			-2147483648	{1 inc}	2147483647			

Code		Possible settings				IMPORTANT	
No.	Designation	Lenze/ {Appl.}	Selection				
C0909	speed limit	1				Limitation of direction of rotation for speed setpoint	📖 335
			1	-175 ... +175 %			
			2	0 ... +175 %			
			3	-175 ... 0 %			
C0910	MCTRL TP2 delay	0				MCTRL dead time compensation TP2 (X6/DI2)	📖 339
			-32767	{1 inc}	32767	1 inc ≡ approx. 60 µs	
C0911	MCTRL TP2 sel.	0				MCTRL touch probe signal source	📖 339
			0	Zero pulse of position encoder (C0490)		X7/X8	
			1	Touch probe input TP2		X6/DI2	
C0912	MCTRL TP2 Edge	0				MCTRL touch probe TP2 edge (for touch probe via digital input X6/DI2 (C0911 = 1))	📖 339
			0	Rising edge TP2			
			1	Falling edge TP2			
			2	Rising and falling edge TP2			
			3	Switched off			
C1120	Sync mode	0				Sync signal source	📖 257
			0	Off		Off	
			1	CAN sync		Sync connection via CAN bus	📖 261
			2	Terminal sync		Sync connection via terminal X6/DI1	📖 262
C1121	Sync cycle	2				Synchronisation cycle	📖 258
			1	{1 ms}	13		
C1122	Sync phase	0.460				Synchronisation phase	📖 259
			0.000	{0.001 ms}	6.500		
C1123	Sync window	0.010				Synchronisation window	📖 260
			0.000	{0.001 ms}	6.500		
C1190	MPTC mode	0				Selection of PTC motor temperature sensor characteristic	
			0	Characteristic for PTC 83-110 (Lenze standard)			
			1	Can be specifically set by the user under C1191 and C1192			
			2	Characteristic for PTC 83-110 and 2 x PTC150 (e.g. in MCS motors)		This selection is only available as of operating system V 8.0. For the corresponding motors, the parameter is not automatically transferred into GDC by the motor data assistant. The parameter has to be set later!	
C1191						Selection of temperature characteristic for PTC	
1	Char.: temp	25	0	{1 °C}	255	PTC characteristic: lower temperature T1	
2	Char.: temp	150				PTC characteristic: upper temperature T2	

Code		Possible settings				IMPORTANT
No.	Designation	Lenze/ {Appl.}	Selection			
C1192						Selection of resistance characteristic for PTC
1	Char.: OHM	1000 {0}	0	{1 Ω}	30000	PTC characteristic: resistance R1 at T1
2	Char.: OHM	2225				PTC characteristic: resistance R2 at T2
C1810	SW ID LECOM					Software identification LECOM Only display
C1811	SW date LECOM					Software creation date LECOM Only display
C2100	Time slice	13				Time slice for cyclic task
			6	{1 ms}	26	
C2102	Task switch	0				Change-over: System task →cycl. task (PLC)
			0	Time slice		No change-over
			1	Time slice + end of PLC_PRG		
			2	Time slice + end of PLC_PRG + end of system task		
C2104	PLC Autorun	0				Automatic start of the PLC program after mains connection
			0	Off		
			1	On		
C2106	Downl.protect	0				Write protection of PLC program
			0	Inactive		
			1	Active		
			2	Reserved		
C2108	PLC run/stop	0				Control PLC program
			0	No function		
			1	Run		
			2	Stop		
			3	Reset		
C2111	GDC Id		27012006132510 = ● Date (day.month.year): 27.01.2006 ● Time (h:min:sec): 13:25:10			Creation date of PLC program Read only
C2113	PLC Prog Name					Name of PLC program Read only
C2115	T-Fkt Credit	0				Number of technology units
C2116	CreditPinCode	0				Code for technology units if service is required (please consult Lenze)
			0	{1}	4294967295	
C2117	Full Credit	0				Service code
C2118	ParWriteChan.	0				CAN object for L_ParRead and L_ParWrite
			0	Process data channel (CAN1...3_IN/CAN1...3_OUT)		
			1	Parameter data channel 2		

Code		Possible settings			IMPORTANT	
No.	Designation	Lenze/ {Appl.}	Selection			
C2120	AIF: Control	0			AIF-CAN: control word	📖 234
			0 {1} 255		Binary interpretation reflects bit states	
			0	No command	**Note:** The MSB (bit 7) of the control word automatically changes its state with every access to the code. Observe this when interpreting the data!	
			1	Read XCAN codes + reinitialisation		
			2	Read XCAN code		
			10	Read XCAN C2356/1 ... 4		
			11	Read XCAN C2357		
			12	Read XCAN C2375		
			13	Read XCAN C2376 ... C2378		
			14	Read XCAN C2382		
			255	Not assigned		
C2121	AIF:State				AIF-CAN: Status ● For detailed information: see description of the corresponding fieldbus module. Read only	
			1 {1} 255		Binary interpretation reflects bit states.	
			Bit 0	XCAN1_IN monitoring time		
			Bit 1	XCAN2_IN monitoring time		
			Bit2	XCAN3_IN monitoring time		
			Bit 3	XCAN bus off		
			Bit4	XCAN operational		
			Bit5	XCAN pre-operational		
			Bit 6	XCAN warning		
			Bit 7	Assigned internally		
C2130	FileNameAdd Da		Symbolic data name		Information on the additional data that have been transmitted together with the application program. Only display	
C2131	Type AddData		Specification identification of the data			
C2132	VersionAddDa ta		Data version			
C2133	TimeStamp		Time stamp of the data			
C2350	XCAN address	1			Node address XCAN **XCAN = system bus (CAN) on AIF**	
			1 {1} 63			
C2351	XCAN baud rate	0			Baud rate XCAN ● Modifications are only valid after reset node!	
			0	500 kbit/s		
			1	250 kbit/s		
			2	125 kbit/s		
			3	50 kbit/s		
			4	1000 kbit/s		
C2352	XCAN mst	0			Establish XCAN master operation.	
			0	Slave		
			1	Master		

Code		Possible settings				IMPORTANT
No.	Designation	Lenze/ {Appl.}	Selection			
C2353						Source for system bus node addresses of XCAN_IN/XCAN_OUT
1	XCAN addr sel	0		CAN node address (C2350)		XCAN1_IN/OUT address
2	XCAN addr sel	0		CAN node address (C2350)		XCAN2_IN/OUT address
3	XCAN addr sel	0		CAN node address (C2350)		XCAN3_IN/OUT address
			0	C2350 (auto)		Automatically determined by C2350
			1	C2354 (man.)		Determined by C2354
C2354						Alternative node addresses for XCAN_IN/XCAN_OUT
1	XCAN addr.	129	1	{1}	512	XCAN1_IN address 2
2	XCAN addr.	1				XCAN1_OUT address 2
3	XCAN addr.	257				XCAN2_IN address 2
4	XCAN addr.	258				XCAN2_OUT address 2
5	XCAN addr.	385				XCAN3_IN address 2
6	XCAN addr.	386				XCAN3_OUT address 2
C2355						Identifier for XCAN_IN/XCAN_OUT Only display
1	XCAN Id		1	{1}	2047	Identifier XCAN1_IN
2	XCAN Id					Identifier XCAN1_OUT
3	XCAN Id					Identifier XCAN2_IN
4	XCAN Id					Identifier XCAN2_OUT
5	XCAN Id					Identifier XCAN3_IN
6	XCAN Id					Identifier XCAN3_OUT
C2356						Time settings for XCAN
1	XCAN times	0	0	{1 ms}	65000	XCAN boot-up time: Delay time for initialisation through the master after mains connection.
2	XCAN times	0				XCAN1...3_OUT cycle times: Factor to task time for process data object transmission. 0 = event-controlled transmission
3	XCAN times	0				
4	XCAN times	0				
5	XCAN times	0				XCAN delay time: When the Operational NMT status is reached (after Pre-operational), the "CANdelay" delay time is started. After the delay time, the PDOs XCAN2_OUT and XCAN3_OUT are sent for the first time.

Code		Possible settings				IMPORTANT
No.	Designation	Lenze/ {Appl.}	Selection			
C2357						Monitoring time for XCAN process data input objects
1	CE monit time	3000	1	{1 ms}	65000	XCAN1_IN monitoring time
2	CE monit time	3000				XCAN2_IN monitoring time
3	CE monit time	3000				XCAN3_IN monitoring time
4	CE monit time	3000				Bus-off
5	CE monit time	3000				AIF monitoring time (can only be set if C2357/6 = 0)
6	CE monit time	0				Sync monitoring time (can only be set if C2357/5 = 0)
C2359	AIF HW Set.	0				
			0	{1}	65535	
C2364		0				Event-controlled PDO transmission
			0	Send PDOs when changing to Operational mode		
			1	Do not send PDOs		
C2365						Enabling the second parameter channel and the PDO channels
1		0	0	{1}	3	Enabling the second parameter channel
2		1				Enabling the first process data channel
3		1				Enabling the second process data channel
4		1				Enabling the third process data channel
			0	Deactivated		
			1	Activated		
			2	Reception activated		
			3	Transmission activated		
C2367	Sync Rx ID	128				XCAN receipt identifier of the sync telegram
			1	{1}	2047	
C2368	Sync Tx ID	128				XCAN transmission identifier of the sync telegram
			1	{1}	2047	
C2369		0				Consumer heartbeat COB-ID
			0	{1}	255	
C2370						
1		0	0	{1 ms}	65535	Consumer heartbeat time
2		0	0	{1 ms}	65535	Producer heartbeat time
C2371		128				Emergency object COB-ID
			0	{1}	2047	
C2372		0				Emergency object COB-ID
			0	{1}	65535	Inhibit time emergency

Code		Possible settings				IMPORTANT
No.	Designation	Lenze/ {Appl.}	Selection			
C2373						Sync counter
1	Sync Rate IN	1	1	{1}	240	XCAN1_IN
2	Sync Rate IN	1				XCAN2_IN
3	Sync Rate IN	1				XCAN3_IN
C2374						Sync counter
1	Sync Rate OUT	1	1	{1}	240	XCAN1_OUT
2	Sync Rate OUT	1				XCAN2_OUT
3	Sync Rate OUT	1				XCAN3_OUT
C2375						TX mode for XCANx_OUT
1	XCAN Tx-Mode	0	Response to sync			XCAN1_OUT
2	XCAN Tx-Mode	0	Response to sync			XCAN2_OUT
3	XCAN Tx-Mode	0	Response to sync			XCAN3_OUT
			0	Response to sync		
			1	No response to sync		
			2	Event		
			3	Event, cycle C2356 superimposed		
C2376						XCAN1_OUT mask
1	XCAN1 Mask	FFFF	0000	{hex}	FFFF	Mask for process data output word 1
2	XCAN1 Mask	FFFF				Mask for process data output word 2
3	XCAN1 Mask	FFFF				Mask for process data output word 3
4	XCAN1 Mask	FFFF				Mask for process data output word 4
C2377						XCAN2_OUT mask
1	XCAN2 Mask	FFFF	0000	{hex}	FFFF	Mask for process data output word 1
2	XCAN2 Mask	FFFF				Mask for process data output word 2
3	XCAN2 Mask	FFFF				Mask for process data output word 3
4	XCAN2 Mask	FFFF				Mask for process data output word 4
C2378						XCAN3_OUT mask
1	XCAN3 Mask	FFFF	0000	{hex}	FFFF	Mask for process data output word 1
2	XCAN3 Mask	FFFF				Mask for process data output word 2
3	XCAN3 Mask	FFFF				Mask for process data output word 3
4	XCAN3 Mask	FFFF				Mask for process data output word 4

Code		Possible settings				IMPORTANT	
No.	Designation	Lenze/ {Appl.}	Selection				
C2382						Configuration of monitoring XCAN (no telegrams received)	
1	XCAN Conf. CE	0		Off		XCAN1_IN	
2	XCAN Conf. CE	0		Off		XCAN2_IN	
3	XCAN Conf. CE	0		Off		XCAN3_IN	
4	XCAN Conf. CE	0		Off		Bus-off	
5	XCAN Conf. CE	0		Off		Life guarding event	
6	XCAN Conf. CE	0		Off		Response to sync reception	
			0	Off			
			1	Controller inhibit (CINH)			
			2	Quick stop (QSP)			
C2450	CANa address	1				Node address for CAN bus interface X14 (CAN-AUX)	📖 161 📖 426
			1	{1}	63	This code is inactive if one of DIP switches 2 ... 7 and switch 1 are set to "ON".	
C2451	CANa baud rate	0				Baud rate for CAN bus interface X14 (CAN-AUX)	📖 161
			0	500 kBit/s			
			1	250 kBit/s			
			2	125 kBit/s			
			3	50 kBit/s			
			4	1000 kBit/s			
C2452	CANa mst	0				Configuration of master/slave for CAN bus interface X14 (CAN-AUX)	📖 167
			0	Slave			
			1	Master			
C2453						Source for system bus node addresses of CANaux_IN/CANaux_OUT (CAN bus interface X14)	
1	CANa addr sel	0		CAN node address (C2450)		Address CANaux1_IN/OUT	
2	CANa addr sel	0		CAN node address (C2450)		Address CANaux2_IN/OUT	
3	CANa addr sel	0		CAN node address (C2450)		Address CANaux3_IN/OUT	
			0	C2450 (auto)		Automatically determined by C2450	
			1	C2454 (man.)		Determined by C2454	
C2454						Alternative node addresses for CANaux_IN/CANaux_OUT (CAN bus interface X14)	
1	CANa addr.	129	1	{1}	512	CANaux1_IN address 2	
2	CANa addr.	1				CANaux1_OUT address 2	
3	CANa addr.	257				CANaux2_IN address 2	
4	CANa addr.	258				CANaux2_OUT address 2	
5	CANa addr.	385				CANaux3_IN address 2	
6	CANa addr.	386				CANaux3_OUT address 2	

Code		Possible settings				IMPORTANT	
No.	Designation	Lenze/ {Appl.}	Selection				
C2455						Identifier for CANaux_IN/CANaux_OUT (CAN bus interface X14) Read only	📖 426
1	CANa Id		1	{1}	2047	Identifier CANaux1_IN	
2	CANa Id					Identifier CANaux1_OUT	
3	CANa Id					Identifier CANaux2_IN	
4	CANa Id					Identifier CANaux2_OUT	
5	CANa Id					Identifier CANaux3_IN	
6	CANa Id					Identifier CANaux3_OUT	
C2456						CAN time settings for CAN bus interface X14 (CAN-AUX)	📖 168
1	CANa times	3000	0	{1 ms}	65000	CAN-AUX boot-up time	
2	CANa times	0				CANaux2_OUT/CANaux3_OUT cycle times: Factor for the task time to send process data telegram. 0 = Event-controlled transmission	
3	CANa times	0					
4	CANa times	20				CAN-AUX delay time: When the NMT state ”Operational” has been reached (after ”Pre-operational”), the delay time ”CANdelay” is started. After the delay time has expired, the PDOs CANaux2_OUT and CANaux3_OUT are sent for the first time.	
C2457						Monitoring time for CANaux1...3_IN (CAN bus interface X14)	📖 191
1	CE monit time	3000	1	{1 ms}	65000	CE11 monitoring time	
2	CE monit time	3000				CE12 monitoring time	
3	CE monit time	3000				CE13 monitoring time	
C2458	Reset node	0				Resetting a node (CAN bus interface X14)	📖 255
			0	No function			
			1	CAN-AUX reset			
C2459	CANa state					CAN bus status (CAN bus interface X14) Read only	
			0	Operational			
			1	Pre-operational			
			2	Warning			
			3	Bus off			

Code		Possible settings		IMPORTANT
No.	Designation	Lenze/ {Appl.}	Selection	
C2460				Telegram counter CANaux_IN/CANaux_OUT (CAN bus interface X14), number of telegrams Read only
1	CANa Messages		0 {1} 65535	All sent telegrams
2	CANa Messages		With a count value > 65535 the counter restarts with 0	All received telegrams
3	CANa Messages			Sent to CANaux1_OUT
4	CANa Messages			Sent to CANaux2_OUT
5	CANa Messages			Sent to CANaux3_OUT
6	CANa Messages			Sent to parameter data channel 1
7	CANa Messages			Sent to parameter data channel 2
8	CANa Messages			Received from CANaux1_IN
9	CANa Messages			Received from CANaux2_IN
10	CANa Messages			Received from CANaux3_IN
11	CANa Messages			Received from parameter data channel 1
12	CANa Messages			Received from parameter data channel 2
C2461				Detected load CANaux_IN/CANaux_OUT (CAN bus interface X14) Read only **A faultless operation is only guaranteed if the total bus load of all connected nodes amounts to a value ≤ 80 %.**
1	Load IN/OUT		0 {1 %} 100	All sent telegrams
2	Load IN/OUT			All received telegrams
3	Load IN/OUT			Sent to CANaux1_OUT
4	Load IN/OUT			Sent to CANaux2_OUT
5	Load IN/OUT			Sent to CANaux3_OUT
6	Load IN/OUT			Sent to parameter data channel 1
7	Load IN/OUT			Sent to parameter data channel 2
8	Load IN/OUT			Received from CANaux1_IN
9	Load IN/OUT			Received from CANaux2_IN
10	Load IN/OUT			Received from CANaux3_IN
11	Load IN/OUT			Received from parameter data channel 1
12	Load IN/OUT			Received from parameter data channel 2

Code		Possible settings				IMPORTANT	
No.	Designation	Lenze/ {Appl.}	Selection				
C2466	Sync Response	1				CAN-AUX sync response for CAN bus interface X14	
			0	No response			
			1	Response			
C2467	Sync Rx ID	128				CAN-AUX sync receipt ID for CAN bus interface X14	📖 259
			1	{1}	256		
C2468	Sync Tx ID	128				CAN-AUX Sync-transmission ID for CAN bus interface X14	📖 412 📖 260
			1	{1}	256		
C2469	Sync Tx time	0				CAN-AUX sync transmission cycle for CAN bus interface X14 A sync telegram with the identifier of C2468 is sent with the set cycle time.	📖 257
			0	{1 ms}	65000	0 = switched off	
C2481	MONIT CE11	3				Configuration of monitoring CANaux1_IN error ”CommErrCANauxIN1” (CE11)	📖 191
			0	TRIP			
			2	Warning			
			3	Off			
C2482	MONIT CE12	3				Configuration of monitoring CANaux2_IN error ”CommErrCANauxIN2” (CE12)	📖 191
			0	TRIP			
			2	Warning			
			3	Off			
C2483	MONIT CE13	3				Configuration of monitoring CANaux3_IN error ”CommErrCANauxIN3” (CE13)	📖 191
			0	TRIP			
			2	Warning			
			3	Off			
C2484	MONIT CE14	3				Configuration of ”system bus (CAN-AUX) off” monitoring at CAN bus interface X14 ”BusOffState” (CE14)	📖 191
			0	TRIP			
			2	Warning			
			3	Off			
C2485	MONIT CE15	3				Configuration of the gateway function	📖 191
			0	TRIP			
			2	Warning			
			3	Off			

Code		Possible settings				IMPORTANT
No.	Designation	Lenze/ {Appl.}	Selection			
C2491						Process data input words (hexadecimal) for CAN bus interface X14 Hexadecimal value is bit-coded. Read only
1	CANa IN bits		0	{1 hex}	FFFF	CANaux1_IN (bit 0 ... 15)
2	CANa IN bits					CANaux1_IN (bit 16 ... 31)
3	CANa IN bits					CANaux2_IN (bit 0 ... 15)
4	CANa IN bits					CANaux2_IN (bit 16 ... 31)
5	CANa IN bits					CANaux3_IN (bit 0 ... 15)
6	CANa IN bits					CANaux3_IN (bit 16 ... 31)
C2492						Process data input words (decimal) for CAN bus interface X14 100.00% = 16384 Read only
1	CANa IN words		-199.99	{0.01 %}	199.99	CANaux1_IN word 1
2	CANa IN words					CANaux1_IN word 2
3	CANa IN words					CANaux1_IN word 3
4	CANa IN words					CANaux2_IN word 1
5	CANa IN words					CANaux2_IN word 2
6	CANa IN words					CANaux2_IN word 3
7	CANa IN words					CANaux2_IN word 4
8	CANa IN words					CANaux3_IN word 1
9	CANa IN words					CANaux3_IN word 2
10	CANa IN words					CANaux3_IN word 3
11	CANa IN words					CANaux3_IN word 4

Code		Possible settings				IMPORTANT	
No.	Designation	Lenze/ {Appl.}	Selection				
C2493						Process data output words (decimal) for CAN bus interface X14 100.00% = 16384 Read only	
1	CANa OUT words		-199.99	{0.01 %}	199.99	CANaux1_OUT word 1	
2	CANa OUT words					CANaux1_OUT word 2	
3	CANa OUT words					CANaux1_OUT word 3	
4	CANa OUT words					CANaux2_OUT word 1	
5	CANa OUT words					CANaux2_OUT word 2	
6	CANa OUT words					CANaux2_OUT word 3	
7	CANa OUT words					CANaux2_OUT word 4	
8	CANa OUT words					CANaux3_OUT word 1	
9	CANa OUT words					CANaux3_OUT word 2	
10	CANa OUT words					CANaux3_OUT word 3	
11	CANa OUT words					CANaux3_OUT word 4	
C2500						PLC flag 1 ... 255	📖 355
			0	{1}	65535		
C2501						PLC flag 256 ... 512	📖 355
			0	{1}	65535		

14.6 Table of attributes

If you want to establish separate programs, you need the information from the table of attributes. It contains all information for the communication to the ECSxA... axis module via parameters.

How to read the table of attributes:

Column		Meaning	Entry	
CoDe		Name of the Lenze code	Cxxxx	
Index	dec	Index used to address a parameter A subindex of an array variable is the same as a Lenze subcode number	24575 - Lenze codes	Only needed for control via INTERBUS-S, PROFIBUS-DP, or system bus (CAN).
	hex		5FFFh - Lenze code	
Data	DS	Data structure	E	Single variable (one parameter element only)
			O	Array variable (several parameter elements)
	DA	Number of the array elements (subcodes)		
	DT	Data type	B8	1 byte bit coded
			B16	2 bytes bit coded
			B32	4 bytes bit coded
			FIX32	32 bit value with sign; decimal with four decimal positions
			I32	4 byte with sign
			U16	2 byte without sign
			U32	4 byte without sign
			VS	ASCII string
	Format	LECOM format (see also the Operating Instructions for the 2102 fieldbus module)	VD	ASCII decimal format
			VH	ASCII hexadecimal format
			VS	String format
			VO	Octett string format for data blocks
	DL	Data length in bytes		
	Decimal position	Number of decimal positions		
Access	LCM-R/W	Access authorisation for LECOM	Ra	Reading is always permitted
			Wa	Writing is always permitted
			W	Writing is bound to a condition
	Condition	Writing condition	CINH	Writing is only permitted when the controller is inhibited (CINH)
			PLC run	Writing is only permitted when the program is running.

Code	Index		Data						Access	
	dec	hex	DS	DA	DT	Format	DL	Decimal position	LCM-R/W	Condition
C0002	24573	5FFDh	E	1	FIX32	VD	4	0	Ra/W	CINH
C0003	24572	5FFCh	E	1	FIX32	VD	4	0	Ra/Wa	
C0004	24571	5FFBh	E	1	FIX32	VD	4	0	Ra/Wa	
C0005	24570	5FFAh	E	1	FIX32	VD	4	0	Ra/Wa	
C0006	24569	5FF9h	E	1	FIX32	VD	4	0	Ra/W	CINH
C0009	24566	5FF6h	E	1	FIX32	VD	4	0	Ra/Wa	
C0011	24564	5FF4h	E	1	FIX32	VD	4	0	Ra/Wa	
C0017	24558	5FEEh	E	1	FIX32	VD	4	0	Ra/Wa	

Code	Index		Data						Access	
	dec	hex	DS	DA	DT	Format	DL	Decimal position	LCM-R/W	Condition
C0018	24557	5FEDh	E	1	FIX32	VD	4	0	Ra/Wa	
C0019	24556	5FECh	E	1	FIX32	VD	4	0	Ra/Wa	
C0022	24553	5FE9h	E	1	FIX32	VD	4	2	Ra/Wa	
C0023	24552	5FE8h	E	1	FIX32	VD	4	0	Ra/Wa	
C0026	24549	5FE5h	A	2	FIX32	VD	4	2	Ra/Wa	
C0027	24548	5FE4h	A	2	FIX32	VD	4	2	Ra/Wa	
C0030	24545	5FE1h	E	1	FIX32	VD	4	0	Ra/Wa	
C0032	24543	5FDFh	E	1	FIX32	VD	4	0	Ra/Wa	
C0034	24541	5FDDh	E	1	FIX32	VD	4	0	Ra/Wa	
C0037	24538	5FDAh	E	1	FIX32	VD	4	0	Ra/Wa	
C0040	24535	5FD7h	E	1	FIX32	VD	4	0	Ra/Wa	
C0042	24533	5FD5h	E	1	FIX32	VD	4	0	Ra	
C0043	24532	5FD4h	E	1	FIX32	VD	4	0	Ra/Wa	
C0050	24525	5FCDh	E	1	FIX32	VD	4	2	Ra	
C0051	24524	5FCCh	E	1	FIX32	VD	4	0	Ra	
C0052	24523	5FCBh	E	1	FIX32	VD	4	0	Ra	
C0053	24522	5FCAh	E	1	FIX32	VD	4	0	Ra	
C0054	24521	5FC9h	E	1	FIX32	VD	4	1	Ra	
C0055	24520	5FC8h	A	4	FIX32	VD	4	2	Ra	
C0056	24519	5FC7h	E	1	FIX32	VD	4	0	Ra	
C0057	24518	5FC6h	E	1	FIX32	VD	4	1	Ra	
C0058	24517	5FC5h	E	1	FIX32	VD	4	1	Ra/Wa	
C0059	24516	5FC4h	E	1	FIX32	VD	4	0	Ra	
C0060	24515	5FC3h	E	1	FIX32	VD	4	0	Ra	
C0061	24514	5FC2h	E	1	FIX32	VD	4	0	Ra	
C0062	24513	5FC1h	E	1	FIX32	VD	4	0	Ra	
C0063	24512	5FC0h	E	1	FIX32	VD	4	0	Ra	
C0064	24511	5FBFh	E	1	FIX32	VD	4	0	Ra	
C0065	24510	5FBEh	E	1	FIX32	VD	4	1	Ra	
C0066	24509	5FBDh	E	1	FIX32	VD	4	0	Ra	
C0067	24508	5FBCh	E	1	FIX32	VD	4	0	Ra	
C0070	24505	5FB9h	E	1	FIX32	VD	4	2	Ra/Wa	
C0071	24504	5FB8h	E	1	FIX32	VD	4	1	Ra/Wa	
C0072	24503	5FB7h	E	1	FIX32	VD	4	2	Ra/Wa	
C0074	24501	5FB5h	E	1	FIX32	VD	4	0	Ra/Wa	
C0075	24500	5FB4h	E	1	FIX32	VD	4	2	Ra/Wa	
C0076	24499	5FB3h	E	1	FIX32	VD	4	2	Ra/Wa	
C0077	24498	5FB2h	E	1	FIX32	VD	4	2	Ra/Wa	
C0078	24497	5FB1h	E	1	FIX32	VD	4	1	Ra/Wa	
C0079	24496	5FB0h	E	1	FIX32	VD	4	1	Ra	
C0080	24495	5FAFh	E	1	FIX32	VD	4	0	Ra/W	CINH
C0081	24494	5FAEh	E	1	FIX32	VD	4	2	Ra/W	CINH
C0082	24493	5FADh	E	1	FIX32	VD	4	3	Ra	
C0083	24492	5FACh	E	1	FIX32	VD	4	2	Ra	
C0084	24491	5FABh	E	1	FIX32	VD	4	2	Ra/W	CINH
C0085	24490	5FAAh	E	1	FIX32	VD	4	2	Ra/W	CINH
C0087	24488	5FA8h	E	1	FIX32	VD	4	0	Ra/W	CINH
C0088	24487	5FA7h	E	1	FIX32	VD	4	1	Ra/W	CINH

Code	Index		Data						Access	
	dec	hex	DS	DA	DT	Format	DL	Decimal position	LCM-R/W	Condition
C0089	24486	5FA6h	E	1	FIX32	VD	4	0	Ra/W	CINH
C0090	24485	5FA5h	E	1	FIX32	VD	4	0	Ra/W	CINH
C0091	24484	5FA4h	E	1	FIX32	VD	4	2	Ra/W	CINH
C0092	24483	5FA3h	E	1	FIX32	VD	4	2	Ra	
C0093	24482	5FA2h	E	1	FIX32	VD	4	0	Ra	
C0094	24481	5FA1h	E	1	FIX32	VD	4	0	Ra/Wa	
C0095	24480	5FA0h	E	1	FIX32	VD	4	0	Ra/W	CINH
C0096	24479	5F9Fh	A	2	FIX32	VD	4	0	Ra/Wa	
C0097	24478	5F9Eh	E	1	FIX32	VD	4	0	Ra	
C0098	24477	5F9Dh	E	1	I32	VH	4	0	Ra/W	CINH
C0099	24476	5F9Ch	E	1	FIX32	VD	4	1	Ra	
C0105	24470	5F96h	E	1	FIX32	VD	4	3	Ra/Wa	
C0108	24467	5F93h	A	2	FIX32	VD	4	2	Ra/Wa	
C0109	24466	5F92h	A	2	FIX32	VD	4	2	Ra/Wa	
C0110	24465	5F91h	E	1	FIX32	VD	4	0	Ra/W	CINH
C0111	24464	5F90h	E	1	FIX32	VD	4	0	Ra/W	CINH
C0112	24463	5F8Fh	E	1	FIX32	VD	4	0	Ra/W	CINH
C0113	24462	5F8Eh	E	1	FIX32	VD	4	0	Ra/W	CINH
C0114	24461	5F8Dh	A	4	FIX32	VD	4	0	Ra/Wa	
C0118	24457	5F89h	A	2	FIX32	VD	4	0	Ra/Wa	
C0120	24455	5F87h	E	1	FIX32	VD	4	0	Ra/Wa	
C0121	24454	5F86h	E	1	FIX32	VD	4	0	Ra/Wa	
C0122	24453	5F85h	E	1	FIX32	VD	4	0	Ra/Wa	
C0123	24452	5F84h	E	1	FIX32	VD	4	0	Ra/Wa	
C0124	24451	5F83h	E	1	FIX32	VD	4	0	Ra/Wa	
C0125	24450	5F82h	E	1	FIX32	VD	4	0	Ra/Wa	
C0126	24449	5F81h	E	1	FIX32	VD	4	0	Ra/Wa	
C0127	24448	5F80h	E	1	FIX32	VD	4	0	Ra/Wa	
C0128	24447	5F7Fh	E	1	FIX32	VD	4	1	Ra/Wa	
C0135	24440	5F78h	E	1	B16	VH	2	0	Ra/Wa	
C0136	24439	5F77h	A	3	B16	VH	2	0	Ra	
C0141	24434	5F72h	E	1	FIX32	VD	4	2	Ra/Wa	
C0142	24433	5F71h	E	1	FIX32	VD	4	0	Ra/Wa	
C0150	24425	5F69h	E	1	B16	VH	2	0	Ra	
C0155	24420	5F64h	E	1	B16	VH	2	0	Ra	
C0157	24418	5F62h	A	7	FIX32	VD	4	0	Ra	
C0161	24414	5F5Eh	E	1	FIX32	VD	4	0	Ra	
C0167	24408	5F58h	E	1	FIX32	VD	4	0	Ra/Wa	
C0168	24407	5F57h	A	8	FIX32	VD	4	0	Ra	
C0169	24406	5F56h	A	8	U32	VH	4	0	Ra	
C0170	24405	5F55h	A	8	FIX32	VD	4	0	Ra	
C0173	24402	5F52h	E	1	FIX32	VD	4	0	Ra/W	CINH
C0174	24401	5F51h	E	1	FIX32	VD	4	0	Ra/W	CINH
C0175	24400	5F50h	E	1	FIX32	VD	4	0	Ra/Wa	
C0178	24397	5F4Dh	E	1	U32	VH	4	0	Ra	
C0179	24396	5F4Ch	E	1	U32	VH	4	0	Ra	
C0183	24392	5F48h	E	1	FIX32	VD	4	0	Ra	
C0199	24376	5F38h	E	1	FIX32	VD	4	0	Ra	

Code	Index		Data						Access	
	dec	hex	DS	DA	DT	Format	DL	Decimal position	LCM-R/W	Condition
C0200	24375	5F37h	E	1	VS	VS	14	0	Ra	
C0201	24374	5F36h	E	1	VS	VS	20	0	Ra	
C0202	24373	5F35h	A	4	U32	VH	4	0	Ra	
C0203	24372	5F34h	E	1	VS	VS	12	0	Ra	
C0204	24371	5F33h	E	1	FIX32	VD	4	0	Ra	
C0205	24370	5F32h	E	1	FIX32	VD	4	0	Ra	
C0206	24369	5F31h	E	1	VS	VS	13	0	Ra	
C0207	24368	5F30h	E	1	VS	VS	14	0	Ra	
C0208	24367	5F2Fh	E	1	VS	VS	14	0	Ra	
C0209	24366	5F2Eh	E	1	VS	VS	14	0	Ra	
C0250	24325	5F05h	E	1	FIX32	VD	4	0	Ra/Wa	
C0254	24321	5F01h	E	1	FIX32	VD	4	4	Ra/Wa	
C0300	24275	5ED3h	E	1	FIX32	VD	4	0	Ra	
C0301	24274	5ED2h	E	1	FIX32	VD	4	0	Ra	
C0302	24273	5ED1h	E	1	B32	VH	4	0	Ra	
C0304	24271	5ECFh	E	1	FIX32	VD	4	0	Ra/Wa	
C0305	24270	5ECEh	E	1	FIX32	VD	4	0	Ra/Wa	
C0306	24269	5ECDh	E	1	B32	VH	4	0	Ra/Wa	
C0307	24268	5ECCh	E	1	B16	VH	2	0	Ra/Wa	
C0308	24267	5ECBh	E	1	FIX32	VD	4	0	Ra/Wa	
C0309	24266	5ECAh	E	1	FIX32	VD	4	0	Ra/Wa	
C0310	24265	5EC9h	E	1	FIX32	VD	4	0	Ra/Wa	
C0349	24226	5EA2h	A	2	FIX32	VD	4	0	Ra	
C0350	24225	5EA1h	E	1	FIX32	VD	4	0	Ra/Wa	
C0351	24224	5EA0h	E	1	FIX32	VD	4	0	Ra/Wa	
C0352	24223	5E9Fh	E	1	FIX32	VD	4	0	Ra/Wa	
C0353	24222	5E9Eh	A	3	FIX32	VD	4	0	Ra/Wa	
C0354	24221	5E9Dh	A	6	FIX32	VD	4	0	Ra/Wa	
C0355	24220	5E9Ch	A	6	FIX32	VD	4	0	Ra	
C0356	24219	5E9Bh	A	4	FIX32	VD	4	0	Ra/Wa	
C0357	24218	5E9Ah	A	3	FIX32	VD	4	0	Ra/Wa	
C0358	24217	5E99h	E	1	FIX32	VD	4	0	Ra/Wa	
C0359	24216	5E98h	E	1	FIX32	VD	4	0	Ra	
C0360	24215	5E97h	A	12	FIX32	VD	4	0	Ra	
C0361	24214	5E96h	A	12	FIX32	VD	4	0	Ra	
C0362	24213	5E95h	E	1	FIX32	VD	4	0	Ra	
C0363	24212	5E94h	E	1	FIX32	VD	4	0	Ra/Wa	
C0365	24210	5E92h	E	1	FIX32	VD	4	0	Ra	
C0366	24209	5E91h	E	1	FIX32	VD	4	0	Ra/Wa	
C0367	24208	5E90h	E	1	FIX32	VD	4	0	Ra/Wa	
C0368	24207	5E8Fh	E	1	FIX32	VD	4	0	Ra/Wa	
C0369	24206	5E8Eh	E	1	FIX32	VD	4	0	Ra/Wa	
C0370	24205	5E8Dh	E	1	FIX32	VD	4	0	Ra/Wa	
C0371	24204	5E8Ch	E	1	FIX32	VD	4	0	Ra/Wa	
C0381	24194	5E82h	E	1	FIX32	VD	4	0	Ra/Wa	
C0382	24193	5E81h	E	1	FIX32	VD	4	0	Ra/Wa	
C0383	24192	5E80h	E	1	FIX32	VD	4	0	Ra/Wa	
C0384	24191	5E7Fh	E	1	FIX32	VD	4	0	Ra/Wa	

Code	Index		Data						Access	
	dec	hex	DS	DA	DT	Format	DL	Decimal position	LCM-R/W	Condition
C0400	24175	5E6Fh	E	1	FIX32	VD	4	2	Ra	
C0416	24159	5E5Fh	E	1	FIX32	VD	4	0	Ra/Wa	
C0417	24158	5E5Eh	E	1	FIX32	VD	4	0	Ra/Wa	
C0418	24157	5E5Dh	E	1	FIX32	VD	4	0	Ra/W	CINH
C0419	24156	5E5Ch	E	1	FIX32	VD	4	0	Ra/W	CINH
C0420	24155	5E5Bh	E	1	FIX32	VD	4	0	Ra/W	CINH
C0421	24154	5E5Ah	E	1	FIX32	VD	4	0	Ra/W	CINH
C0426	24149	5E55h	E	1	FIX32	VD	4	0	Ra	
C0427	24148	5E54h	E	1	FIX32	VD	4	0	Ra/W	CINH
C0428	24147	5E53h	E	1	FIX32	VD	4	0	Ra/Wa	
C0429	24146	5E52h	E	1	FIX32	VD	4	0	Ra/Wa	
C0431	24144	5E50h	E	1	FIX32	VD	4	0	Ra/Wa	
C0443	24132	5E44h	E	1	B8	VH	1	0	Ra	
C0444	24131	5E43h	A	2	FIX32	VD	4	0	Ra	
C0469	24106	5E2Ah	E	1	FIX32	VD	4	0	Ra/W	CINH
C0470	24105	5E29h	A	4	B8	VH	1	0	Ra/Wa	
C0471	24104	5E28h	E	1	B32	VH	4	0	Ra/Wa	
C0472	24103	5E27h	A	20	FIX32	VD	4	2	Ra/Wa	
C0473	24102	5E26h	A	10	FIX32	VD	4	0	Ra/Wa	
C0474	24101	5E25h	A	5	I32	VH	4	0	Ra/Wa	
C0475	24100	5E24h	A	2	FIX32	VD	4	0	Ra/Wa	
C0490	24085	5E15h	E	1	FIX32	VD	4	0	Ra/W	CINH
C0491	24084	5E14h	E	1	FIX32	VD	4	0	Ra/W	CINH
C0495	24080	5E10h	E	1	FIX32	VD	4	0	Ra/W	CINH
C0497	24078	5E0Eh	E	1	FIX32	VD	4	1	Ra/Wa	
C0504	24071	5E07h	A	2	FIX32	VD	4	0	Ra/Wa	
C0505	24070	5E06h	E	1	FIX32	VD	4	0	Ra/Wa	
C0506	24069	5E05h	E	1	FIX32	VD	4	0	Ra/Wa	
C0507	24068	5E04h	E	1	FIX32	VD	4	0	Ra	
C0508	24067	5E03h	E	1	FIX32	VD	4	0	Ra/Wa	
C0509	24066	5E02h	E	1	FIX32	VD	4	0	Ra/Wa	
C0510	24065	5E01h	E	1	FIX32	VD	4	0	Ra/Wa	
C0514	24061	5DFDh	A	40	U32	VH	4	0	Ra/Wa	
C0515	24060	5DFCh	A	40	U32	VH	4	0	Ra	
C0516	24059	5DFBh	E	1	FIX32	VD	4	0	Ra/W	CINH
C0517	24058	5DFAh	A	32	FIX32	VD	4	2	Ra/Wa	
C0518	24057	5DF9h	A	250	B32	VH	4	0	Ra/Wa	
C0519	24056	5DF8h	A	250	B32	VH	4	0	Ra	
C0540	24035	5DE3h	E	1	FIX32	VD	4	0	Ra/W	CINH
C0545	24030	5DDEh	E	1	FIX32	VD	4	0	Ra/Wa	
C0547	24028	5DDCh	E	1	FIX32	VD	4	2	Ra	
C0549	24026	5DDAh	E	1	FIX32	VD	4	0	Ra	
C0559	24016	5DD0h	E	1	FIX32	VD	4	0	Ra/Wa	
C0576	23999	5DBFh	E	1	FIX32	VD	4	0	Ra/Wa	
C0577	23998	5DBEh	E	1	FIX32	VD	4	3	Ra/Wa	
C0578	23997	5DBDh	E	1	FIX32	VD	4	1	Ra/Wa	
C0579	23996	5DBCh	E	1	FIX32	VD	4	0	Ra/Wa	
C0580	23995	5DBBh	E	1	FIX32	VD	4	0	Ra/Wa	

Code	Index		Data						Access	
	dec	hex	DS	DA	DT	Format	DL	Decimal position	LCM-R/W	Condition
C0581	23994	5DBAh	E	1	FIX32	VD	4	0	Ra/Wa	
C0582	23993	5DB9h	E	1	FIX32	VD	4	0	Ra/Wa	
C0583	23992	5DB8h	E	1	FIX32	VD	4	0	Ra/Wa	
C0584	23991	5DB7h	E	1	FIX32	VD	4	0	Ra/Wa	
C0586	23989	5DB5h	E	1	FIX32	VD	4	0	Ra/Wa	
C0588	23987	5DB3h	E	1	FIX32	VD	4	0	Ra/Wa	
C0591	23984	5DB0h	E	1	FIX32	VD	4	0	Ra/Wa	
C0592	23983	5DAFh	E	1	FIX32	VD	4	0	Ra/Wa	
C0593	23982	5DAEh	E	1	FIX32	VD	4	0	Ra/Wa	
C0594	23981	5DADh	E	1	FIX32	VD	4	0	Ra/Wa	
C0595	23980	5DACh	E	1	FIX32	VD	4	0	Ra/Wa	
C0596	23979	5DABh	E	1	FIX32	VD	4	0	Ra/Wa	
C0597	23978	5DAAh	E	1	FIX32	VD	4	0	Ra/Wa	
C0598	23977	5DA9h	E	1	FIX32	VD	4	0	Ra/Wa	
C0599	23976	5DA8h	E	1	FIX32	VD	4	1	Ra/Wa	
C0602	23973	5DA5h	E	1	FIX32	VD	4	0	Ra/Wa	
C0603	23972	5DA4h	E	1	FIX32	VD	4	0	Ra/Wa	
C0604	23971	5DA3h	E	1	FIX32	VD	4	0	Ra/Wa	
C0605	23970	5DA2h	E	1	FIX32	VD	4	0	Ra/Wa	
C0606	23969	5DA1h	E	1	FIX32	VD	4	0	Ra/Wa	
C0607	23968	5DA0h	E	1	FIX32	VD	4	0	Ra/Wa	
C0608	23967	5D9Fh	E	1	FIX32	VD	4	0	Ra/Wa	
C0609	23966	5D9Eh	E	1	FIX32	VD	4	0	Ra/Wa	
C0745	23830	5D16h	E	1	U32	VH	4	0	Ra/Wa	
C0746	23829	5D15h	A	200	U32	VH	4	0	Ra	
C0747	23828	5D14h	A	8	I16	VH	2	0	Ra	
C0855	23720	5CA8h	A	2	B16	VH	2	0	Ra	
C0856	23719	5CA7h	A	3	FIX32	VD	4	2	Ra	
C0857	23718	5CA6h	E	1	I32	VH	4	0	Ra	
C0858	23717	5CA5h	A	3	FIX32	VD	4	2	Ra	
C0859	23716	5CA4h	E	1	I32	VH	4	0	Ra	
C0863	23712	5CA0h	A	6	B16	VH	2	0	Ra	
C0866	23709	5C9Dh	A	11	FIX32	VD	4	2	Ra	
C0867	23708	5C9Ch	A	3	I32	VH	4	0	Ra	
C0868	23707	5C9Bh	A	11	FIX32	VD	4	2	Ra	
C0869	23706	5C9Ah	A	3	I32	VH	4	0	Ra	
C0878	23697	5C91h	A	4	FIX32	VD	4	0	Ra	
C0879	23696	5C90h	A	3	FIX32	VD	4	0	Ra/Wa	
C0906	23669	5C75h	A	9	FIX32	VD	4	2	Ra	
C0907	23668	5C74h	A	4	FIX32	VD	4	0	Ra	
C0908	23667	5C73h	E	1	I32	VH	4	0	Ra	
C0909	23666	5C72h	E	1	FIX32	VD	4	0	Ra/Wa	
C0910	23665	5C71h	E	1	FIX32	VD	4	0	Ra/Wa	
C0911	23664	5C70h	E	1	FIX32	VD	4	0	Ra/Wa	
C0912	23663	5C6Fh	E	1	FIX32	VD	4	0	Ra/Wa	
C1120	23455	5B9Fh	E	1	FIX32	VD	4	0	Ra/Wa	
C1121	23454	5B9Eh	E	1	FIX32	VD	4	0	Ra/Wa	
C1122	23453	5B9Dh	E	1	FIX32	VD	4	3	Ra/Wa	

Code	Index		Data						Access	
	dec	hex	DS	DA	DT	Format	DL	Decimal position	LCM-R/W	Condition
C1123	23452	5B9Ch	E	1	FIX32	VD	4	3	Ra/Wa	
C1190	23385	5B59h	E	1	FIX32	VD	4	0	Ra/Wa	
C1191	23384	5B58h	A	2	FIX32	VD	4	0	Ra/Wa	
C1192	23383	5B57h	A	2	FIX32	VD	4	0	Ra/Wa	
C1771	22804	5914 h	E	1	FIX32	VD	4	0	Ra/Wa	
C1772	22803	5913h	E	1	FIX32	VD	4	0	Ra/Wa	
C1773	22802	5912h	E	1	FIX32	VD	4	0	Ra/Wa	
C1792	22783	58FFh	E	1	FIX32	VD	4	0	Ra/Wa	
C1793	22782	58FEh	E	1	FIX32	VD	4	1	Ra/Wa	
C1794	22781	58FDh	E	1	FIX32	VD	4	0	Ra/W	CINH
C1798	22777	58F9h	E	1	VS	VS	13	0	Ra	
C1810	22765	58EDh	E	1	VS	VS	14	0	Ra	
C1811	22764	58ECh	E	1	VS	VS	20	0	Ra	
C1921	22654	587Eh	E	1	FIX32	VD	4	0	Ra/Wa	
C1922	22653	587Dh	E	1	FIX32	VD	4	0	Ra/Wa	
C1923	22652	587Ch	E	1	FIX32	VD	4	0	Ra/Wa	
C2100	22475	57CBh	E	1	FIX32	VD	4	0	Ra/Wa	
C2102	22473	57C9h	E	1	FIX32	VD	4	0	Ra/Wa	
C2103	22472	57C8h	A	8	I16	VH	2	0	Ra	
C2104	22471	57C7h	E	1	FIX32	VD	4	0	Ra/Wa	
C2106	22469	57C5h	E	1	FIX32	VD	4	0	Ra/Wa	
C2108	22467	57C3h	E	1	FIX32	VD	4	0	Ra/Wa	
C2110	22465	57C1h	A	3	FIX32	VD	4	0	Ra	
C2111	22464	57C0h	E	1	VS	VS	14	0	Ra	
C2112	22463	57BFh	A	4	U32	VH	4	0	Ra	
C2113	22462	57BEh	E	1	VS	VS	12	0	Ra	
C2114	22461	57BDh	A	13	U32	VH	4	0	Ra	
C2115	22460	57BCh	E	1	U16	VH	2	0	Ra/Wa	
C2116	22459	57BBh	E	1	U32	VH	4	0	Ra/Wa	
C2117	22458	57BAh	E	1	FIX32	VD	4	0	Ra	
C2118	22457	57B9h	E	1	FIX32	VD	4	0	Ra/Wa	
C2120	22455	57B7h	E	1	FIX32	VD	4	0	Ra/Wa	
C2121	22454	57B6h	E	1	B8	VH	1	0	Ra	
C2130	22445	57ADh	E	1	VS	VS	12	0	Ra	
C2131	22444	57ACh	E	1	FIX32	VD	4	0	Ra	
C2132	22443	57ABh	E	1	U32	VH	4	0	Ra	
C2133	22442	57AAh	E	1	U32	VH	4	0	Ra	
C2140	22435	57A3h	E	1	B16	VH	2	0	Ra	
C2141	22434	57A2h	E	1	B16	VH	2	0	Ra	
C2142	22433	57A1h	E	1	B16	VH	2	0	Ra	
C2143	22432	57A0h	E	1	B16	VH	2	0	Ra/Wa	
C2144	22431	579Fh	E	1	VS	VS	4	0	Ra	
C2145	22430	579Eh	E	1	VS	VS	2	0	Ra	
C2146	22429	579Dh	E	1	VS	VS	12	0	Ra	
C2147	22428	579Ch	E	1	VS	VS	13	0	Ra	
C2148	22427	579Bh	A	8	B8	VH	1	0	Ra	
C2149	22426	579Ah	A	35	B8	VH	1	0	Ra	
C2150	22425	5799h	E	1	B16	VH	2	0	Ra/Wa	

Code	Index		Data						Access	
	dec	hex	DS	DA	DT	Format	DL	Decimal position	LCM-R/W	Condition
C2350	22225	56D1h	E	1	FIX32	VD	4	0	Ra/Wa	
C2351	22224	56D0h	E	1	FIX32	VD	4	0	Ra/Wa	
C2352	22223	56CFh	E	1	FIX32	VD	4	0	Ra/Wa	
C2353	22222	56CEh	A	3	FIX32	VD	4	0	Ra/Wa	
C2354	22221	56CDh	A	6	FIX32	VD	4	0	Ra/Wa	
C2355	22220	56CCh	A	6	FIX32	VD	4	0	Ra/Wa	
C2356	22219	56CBh	A	5	FIX32	VD	4	0	Ra/Wa	
C2357	22218	56CAh	A	4	FIX32	VD	4	0	Ra/Wa	
C2359	22216	56C8h	E	1	FIX32	VD	4	0	Ra/Wa	
C2367	22208	56C0h	E	1	FIX32	VD	4	0	Ra/Wa	
C2368	22207	56BFh	E	1	FIX32	VD	4	0	Ra/Wa	
C2373	22202	56BAh	A	3	FIX32	VD	4	0	Ra/Wa	
C2374	22201	56B9h	A	3	FIX32	VD	4	0	Ra/Wa	
C2375	22200	56B8h	A	3	FIX32	VD	4	0	Ra/Wa	
C2376	22199	56B7h	A	4	FIX32	VD	4	0	Ra/Wa	
C2377	22198	56B6h	A	4	FIX32	VD	4	0	Ra/Wa	
C2378	22197	56B5h	A	4	FIX32	VD	4	0	Ra/Wa	
C2382	22193	56B1h	A	5	FIX32	VD	4	0	Ra/Wa	
C2450	22125	566Dh	E	1	FIX32	VD	4	0	Ra/Wa	
C2451	22124	566Ch	E	1	FIX32	VD	4	0	Ra/Wa	
C2452	22123	566Bh	E	1	FIX32	VD	4	0	Ra/Wa	
C2453	22122	566Ah	A	3	FIX32	VD	4	0	Ra/Wa	
C2454	22121	5669h	A	6	FIX32	VD	4	0	Ra/Wa	
C2455	22120	5668h	A	6	FIX32	VD	4	0	Ra	
C2456	22119	5667h	A	4	FIX32	VD	4	0	Ra/Wa	
C2457	22118	5666h	A	3	FIX32	VD	4	0	Ra/Wa	
C2458	22117	5665h	E	1	FIX32	VD	4	0	Ra/Wa	
C2459	22116	5664h	E	1	FIX32	VD	4	0	Ra	
C2460	22115	5663h	A	12	FIX32	VD	4	0	Ra	
C2461	22114	5662h	A	12	FIX32	VD	4	0	Ra	
C2466	22109	565Dh	E	1	FIX32	VD	4	0	Ra/Wa	
C2467	22108	565Ch	E	1	FIX32	VD	4	0	Ra/Wa	
C2468	22107	565Bh	E	1	FIX32	VD	4	0	Ra/Wa	
C2469	22106	565Ah	E	1	FIX32	VD	4	0	Ra/Wa	
C2481	22094	564Eh	E	1	FIX32	VD	4	0	Ra/Wa	
C2482	22093	564Dh	E	1	FIX32	VD	4	0	Ra/Wa	
C2483	22092	564Ch	E	1	FIX32	VD	4	0	Ra/Wa	
C2484	22091	564Bh	E	1	FIX32	VD	4	0	Ra/Wa	
C2485	22090	564Ah	E	1	FIX32	VD	4	0	Ra/Wa	
C2491	22084	5644h	A	6	B16	VH	2	0	Ra	
C2492	22083	5643h	A	11	FIX32	VD	4	2	Ra	
C2493	22082	5642h	A	11	FIX32	VD	4	2	Ra	
C2500	22075	563Bh	A	255	FIX32	VD	4	0	Ra/Wa	
C2501	22074	563Ah	A	255	FIX32	VD	4	0	Ra/Wa	

14.7 General information about the system bus (CAN)

Note!

The information on this chapter will be part of the ”CAN Communication Manual” at a later date.

All Lenze drive and automation systems are equipped with an integrated system bus interface for the networking of control components on field level.

Via the system bus interface, for instance process data and parameter values can be exchanged between the nodes. In addition, the interface enables the connection of further modules such as distributed terminals, operator and input devices or external controls and host systems.

The system bus interface transmits CAN objects following the CANopen communication profile (CiA DS301, version 4.01) developed by the umbrella organisation of **CiA** (**C**AN **i**n **A**utomation) in conformity with the **CAL** (**C**AN **A**pplication **L**ayer).

Tip!

For further information visit the homepage of the CAN user organisation CiA (CAN in Automation): www.can-cia.org.

14.7.1 Structure of the CAN data telegram

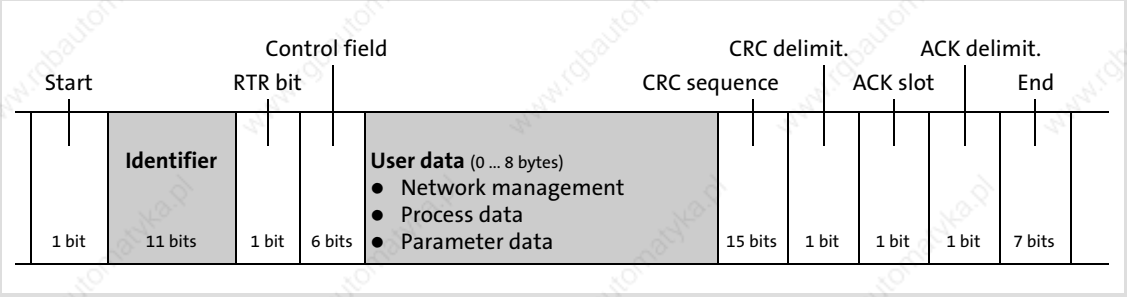

Fig. 14-4 Basic structure of the CAN telegram

Identifier

The identifier determines the priority of the message. Moreover, the following is coded:

- The CAN node address (device address in the CAN network) of the node which is to receive the CAN telegram.
  See also chapter ”Addressing of the parameter and process data objects” (📖 426).
- The type of user data to be transferred

User data

The user data area of the CAN telegram either contains network management data, process data or parameter data:

User data	Description
Network management data (NMT data)	The information serves to establish communication via the CAN network
Process data (PDO, Process Data Objects)	● Process data are transmitted via the process data channel. ● The process data serve to control the controller. ● Process data can be accessed directly by the higher-level host system. The data are, for instance, stored directly in the I/O area of the PLC. It is necessary that the data can be exchanged between the host system and the controller within the shortest time possible. In this connection, small amounts of data can be transferred cyclically. ● Process data are transmitted between the higher-level host system and the controllers to ensure a permanent exchange of current input and output data. ● Process data are not stored in the controller. ● Process data are, for instance, setpoints and actual values.
Parameter data (SDO, Service Data Objects)	● Parameter data are transferred via the parameter data channel and acknowledged by the receiver, i.e. the receiver gets a feedback whether the transmission was successful. ● Parameter data of Lenze devices are called codes. ● The parameter data channel enables access to all Lenze codes and all CANopen indexes. ● Parameters are set, for instance, for the initial commissioning of a plant or when material of a production machine is exchanged. ● Usually the transfer of parameters is not time-critical. ● Parameter changes are stored in the controller. ● Parameter data are, for instance, operating parameters, diagnostic information and motor data.

Tip!

The other signals refer to the transfer features of the CAN telegram that are not described in these instructions.

For further information visit the homepage of the CAN user organisation CiA (CAN in Automation): www.can-cia.org.

14.7.2 Communication phases of the CAN network (NMT)

With regard to communication the controller knows the following states:

Status	Explanation
"Initialisation" (Initialisation)	After the controller is switched on, the initialisation process starts. During this phase the controller is not involved in the data exchange on the bus. Furthermore, a part of the initialisation or the entire initialisation process can be executed in each NMT status by transmitting different telegrams (see "state transitions"). All parameters already set will then be written again with their standard values. After the initialisation is completed, the controller is in the "Pre-Operational" status.
"Pre-operational" (before ready for operation)	The controller can receive parameter data. The process data is ignored.
"Operational" (Ready for operation)	The controller can receive parameter data and process data.
"Stopped"	Only network management telegrams can be received.

State transitions

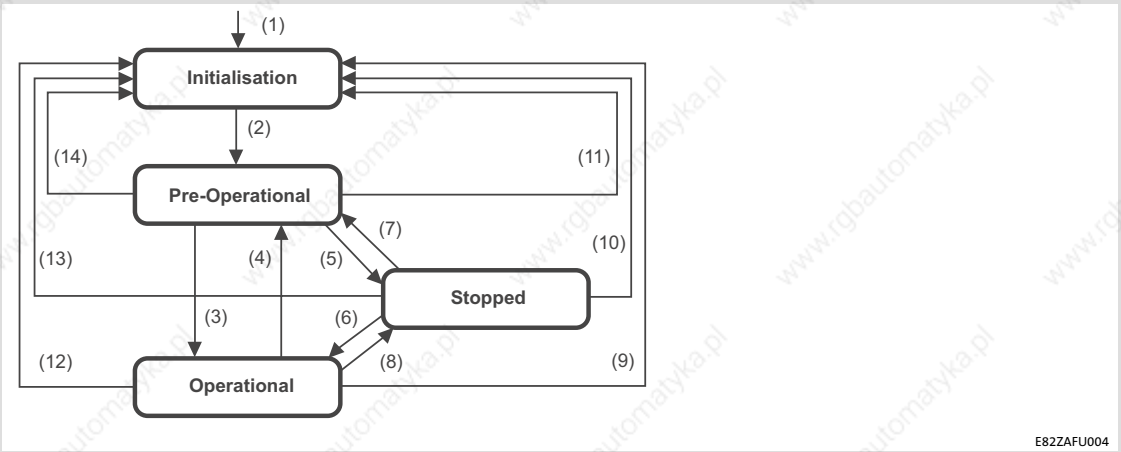

Fig. 14-5 State transitions in the CAN network (NMT)

State transition	Command (hex)	Network status after change	Effect on process or parameter data after state change
(1)	-	Initialisation	When the mains is switched on, the initialisation is started automatically. During the initialisation the controller is not involved in the data exchange. After the initialisation is completed, the node changes automatically to the "Pre-Operational" status.
(2)	-	Pre-operational	In this phase the master decides how the controllers take part in the communication.
From here, the states are changed over by the master for the entire network. A target address included in the command specifies the receiver/s.			
(3), (6)	01 xx	Operational	Network management telegrams, sync, emergency, process data (PDO) and parameter data (SDO) are active (corresponds to "Start Remote Node") Optional: In case of change, event-controlled and time-controlled process data (PDO) are sent once.
(4), (7)	80 xx	Pre-operational	Network management telegrams, sync, emergency, and parameter data (SDO) are active (corresponds to "Enter Pre-Operational State")
(5), (8)	02 xx	Stopped	Only network management telegrams can be received.
(9)	81 xx	Initialisation	Initialisation of all parameters in the communication module with the values stored (corresponds to "Reset Node")
(10)			
(11)			
(12)	82 xx		Initialisation of communication-relevant parameters (CiA DS 301) in the communication module with the values stored (corresponds to "Reset Communication")
(13)			
(14)			

xx = 00_{hex}	With this assignment, all devices connected are addressed by the telegram. The state can be changed for all devices at the same time.
xx = node ID	If a node address is specified, only the state of the addressed device will be changed.

Network management (NMT)

The telegram structure used for the network management contains the identifier and the command included in the user data which consists of the command byte and the node address.

	Identifier			User data						
	Value = 0 11 bits			Only contains command 2 bytes						

Fig. 14-6 Telegram for switching over the communcation phases

The communication phases are changed over by a node, the network master, for the entire network. The change-over can also be done by a controller.

With a certain delay after mains connection, a telegram is sent once which changes the status of the entire drive system to ”Operational”. The delay time can be set via the following codes:

Interface		Code
X1	Automation interface (AIF)	C2356/4
X4	ECSxS/P/M: MotionBus (CAN) ECSxA/E: System bus (CAN)	C0356/4
X14	System bus (CAN) ● Interface is not available for ECSxE.	C2456/4

Note!

Communication via process data only is possible with a state change to “operational”!

Example:
For changing the state of all nodes on the bus from ”pre-operational” to “operational” via the CAN master, the following identifier and user data must be set in the telegram:

► Identifier: 00 (broadcast telegram)
► User data: 0100 (hex)

14.7.3 Process data transfer

Definitions

► Process data telegrams between host and drive are distinguished as follows:
– Process data telegrams **to** the drive
– Process data telegrams **from** the drive

► The CANopen process data objects are designated as seen from the node’s view:
– RPDOx: process data object received by a node
– TPDOx: process data object sent by a node

14.7.3.1 Available process data objects

The following process data objects (PDOs) are available for the ECS modules via the interfaces X1, X4 and X14:

Interface	PDOs RPDO: to ECS module TPDO: from ECS module		in ECS module				
			ECSxE	ECSxS	ECSxP	ECSxM	ECSxA
X1 Automation interface (AIF)	RPDO	XCAN1_IN	–	✓	–	–	✓
		XCAN2_IN	–	✓	–	–	✓
		XCAN3_IN	–	✓	–	–	✓
	TPDO	XCAN1_OUT	–	✓	–	–	✓
		XCAN2_OUT	–	✓	–	–	✓
		XCAN3_OUT	–	✓	–	–	✓
X4 ECSxS/P/M: MotionBus (CAN) ECSxA/E: System bus (CAN)	RPDO	CAN1_IN	✓	✓	✓	✓	✓
		CAN2_IN	–	✓	✓	–	✓
		CAN3_IN	✓	✓	✓	–	✓
	TPDO	CAN1_OUT	✓	✓	✓	✓	✓
		CAN2_OUT	–	✓	✓	–	✓
		CAN3_OUT	✓	✓	✓	–	✓
X14 System bus (CAN) Interface is not available for ECSxE.	RPDO	CANaux1_IN	–	–	✓	–	✓
		CANaux2_IN	–	–	✓	–	✓
		CANaux3_IN	–	–	–	–	✓
	TPDO	CANaux1_OUT	–	–	✓	–	✓
		CANaux2_OUT	–	–	✓	–	✓
		CANaux3_OUT	–	–	–	–	✓

Note!

In case of the ECSxE power supply module, the PDOs CAN1_IN/OUT and CAN3_IN/OUT cannot be used simultaneously. The PDOs to be used are selected via C0360.

- The process data objects are integrated into the ECSxA... axis modules in the form of system blocks (📖 230).
- In the system blocks the user data is converted to corresponding signal types for further use.

14.7.3.2 Structure of the process data

The process data telegrams have a maximum user data length of eight bytes each.

Process data input telegram (RPDO)

- The process data input telegram transmits control information to the controller.
- The eight bytes of user data can be freely assigned.

	Identifier 11 bits			User data (8 bytes)							
				00_{hex}	00_{hex}	00_{hex}	00_{hex}	00_{hex}	00_{hex}	00_{hex}	00_{hex}

Fig. 14-7 Structure of process data input telegram (RPDO)

Process data output telegram (TPDO)

- The process data output telegram reports status information from the controller. Status information can be as follows:
  - Current status of the controller
  - Status of the digital inputs
  - States about internal analog values
  - Fault/error messages

  This information enables the higher-level control to respond accordingly.
- The eight bytes of user data can be freely assigned.

	Identifier 11 bits			User data (8 bytes)							
				00_{hex}	00_{hex}	00_{hex}	00_{hex}	00_{hex}	00_{hex}	00_{hex}	00_{hex}

Fig. 14-8 Structure of process data output telegram (TPDO)

14.7.3.3 Transfer of the process data objects

Process data objects		Data transmission	
		ECSxE	ECSxS/P/M/A
RPDOs (to ECS module)	XCAN1_IN	–	cyclic (sync-controlled)
	CAN1_IN	cyclic (sync-controlled)	
	CANaux1_IN	–	
	XCAN2_IN	–	event-controlled/cyclic without sync
	CAN2_IN	–	
	CANaux2_IN	–	
	XCAN3_IN	–	event-controlled/cyclic without sync
	CAN3_IN	event-controlled/cyclic without sync	
	CANaux3_IN	–	
TPDOs (from ECS module)	XCAN1_OUT	–	cyclic (sync-controlled)
	CAN1_OUT	cyclic (sync-controlled)	
	CANaux1_OUT	–	
	XCAN2_OUT	–	event-controlled/cyclic without sync
	CAN2_OUT	–	
	CANaux2_OUT	–	
	XCAN3_OUT	–	event-controlled/cyclic without sync
	CAN3_OUT	event-controlled/cyclic without sync	
	CANaux3_OUT	–	

► Cyclic data transmission with sync telegram (📖 419)
(via XCAN1, CAN1, CANaux1)
The sync telegram enables the controller to accept the process data from the master (RPDOs) or send it to the master (TPDOs).

► Event-controlled data transmission (📖 420)
(via XCAN2/3, CAN2/3, CANaux2/3)
The data will be transmitted if a value changes in the corresponding output object.

► Cyclic data transmission without sync telegram
(via XCAN2/3, CAN2/3, CANaux2/3)
The data is transmitted in fixed times. The cycle time can be set via the following codes:

Interface		Code
X1	Automation interface (AIF)	C2356
X4	ECSxS/P/M: MotionBus (CAN) ECSxA/E: System bus (CAN)	C0356
X14	System bus (CAN) ● Interface is not available for ECSxE.	C2456

– Setting of cycle time > 0: data transmission with fixed cycle time
– Setting of cycle time = 0: event-controlled data transmission

14.7.3.4 Cyclic process data objects

Cyclic process data objects are determined for a higher-level host system.

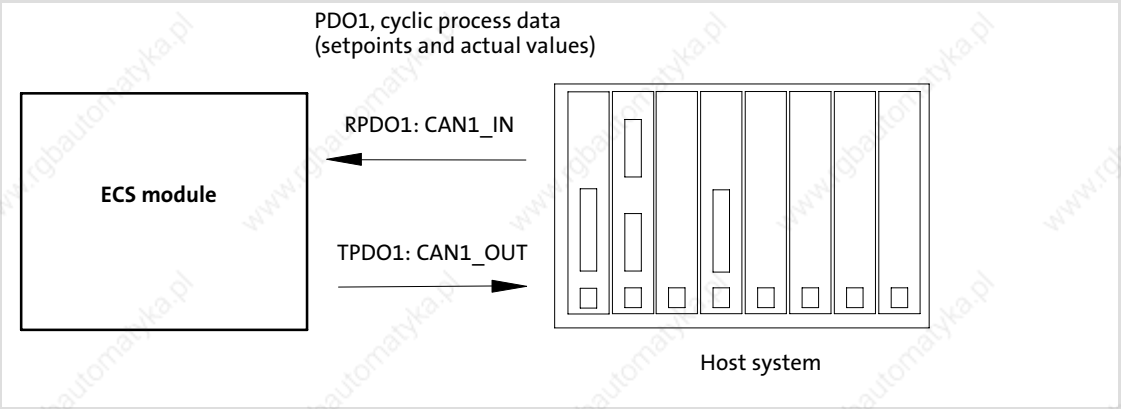

Fig. 14-9 Example: Process data transfer via CAN1_IN and CAN1_OUT

For a quick exchange of process data from or to the master, one process data object is available for input signals (RPDO1) and one process data object for output signals (TPDO1) with eight bytes of user data each.

Synchronisation of PDOs with sync-controlled transmission

In order that the cyclic process data can be read by the controller or the controller accepts the process data, a special telegram, the sync telegram, is used in addition.

The sync telegram is the trigger point for sending process data of the controller to the master and transferring process data from the master to the controller.

A sync-controlled process data processing requires a corresponding generation of the sync telegram.

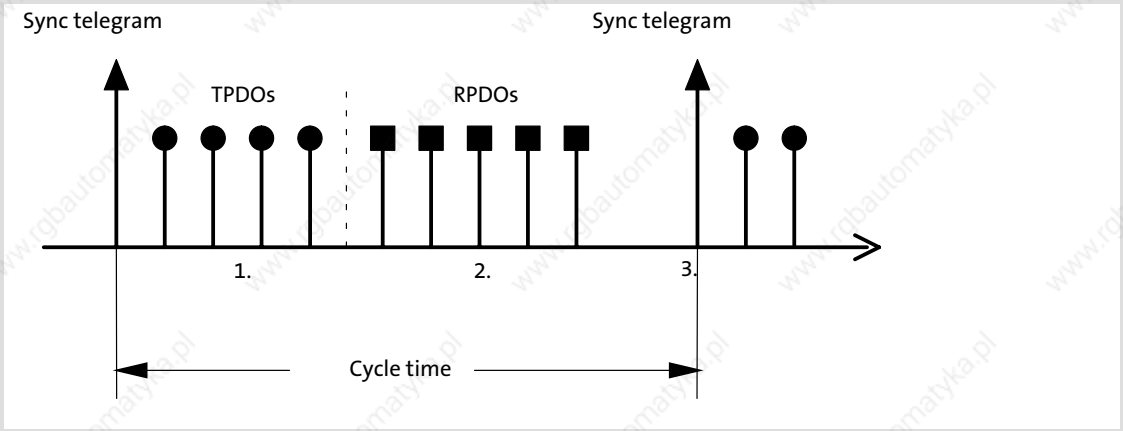

Fig. 14-10 Sync telegram

1. After the sync telegram has been received, the synchronous process data from the controllers are sent to the master (TPDOs). They are read as process input data in the master.
2. When the transmission process is completed, the process output data (of the master) are received by the controllers (RPDOs).

   All other telegrams (e.g. parameters or event-controlled process data) are accepted acyclically by the controllers after transmission is completed. The acyclic data are not displayed in the above graphics. They must be considered when the cycle time is dimensioned.
3. The data in the controller is accepted with the next sync telegram.

Tip!

The response to a sync telegram is determined by the transmission type selected.

Note!

Information on how to set the synchronisation can be found from 📖 257.

14.7.3.5 Event-controlled process data objects

The event-controlled process data objects are particularly suitable for the data exchange between controllers and for distributed terminal extensions. They can, however, also be used by a host system.

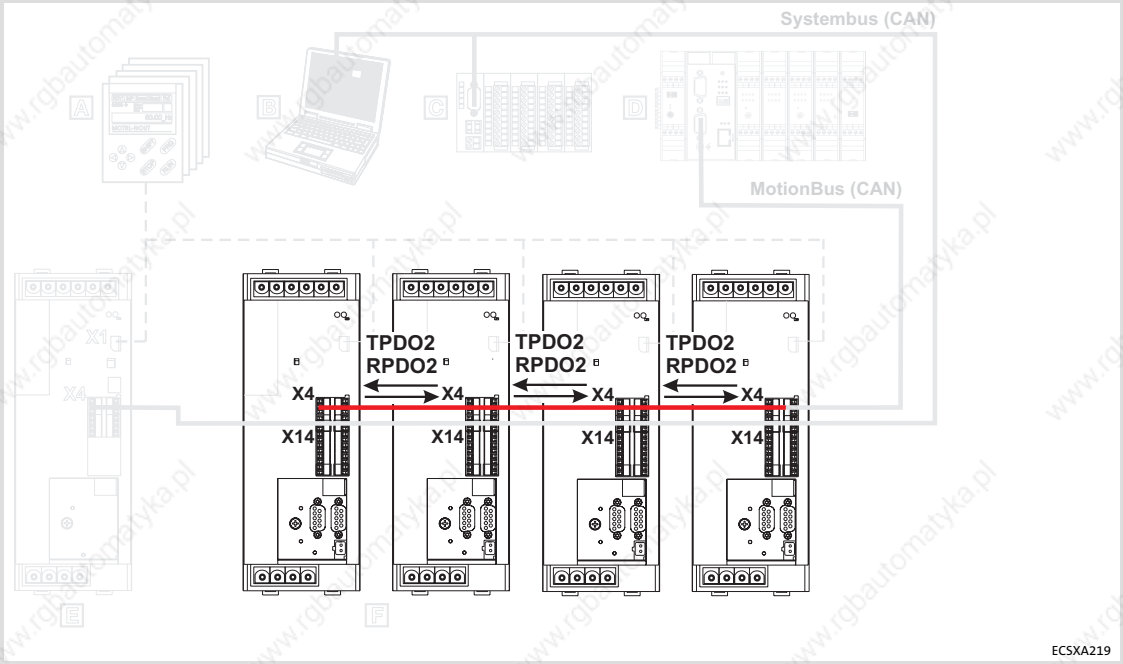

Fig. 14-11 Example: event-controlled process data objects PDO2

The process data objects serve to transmit simple binary signals (e.g. states of digital input terminals) or complete values in 16 and 32 bits (e.g. analog signals).

14.7.4 Parameter data transfer

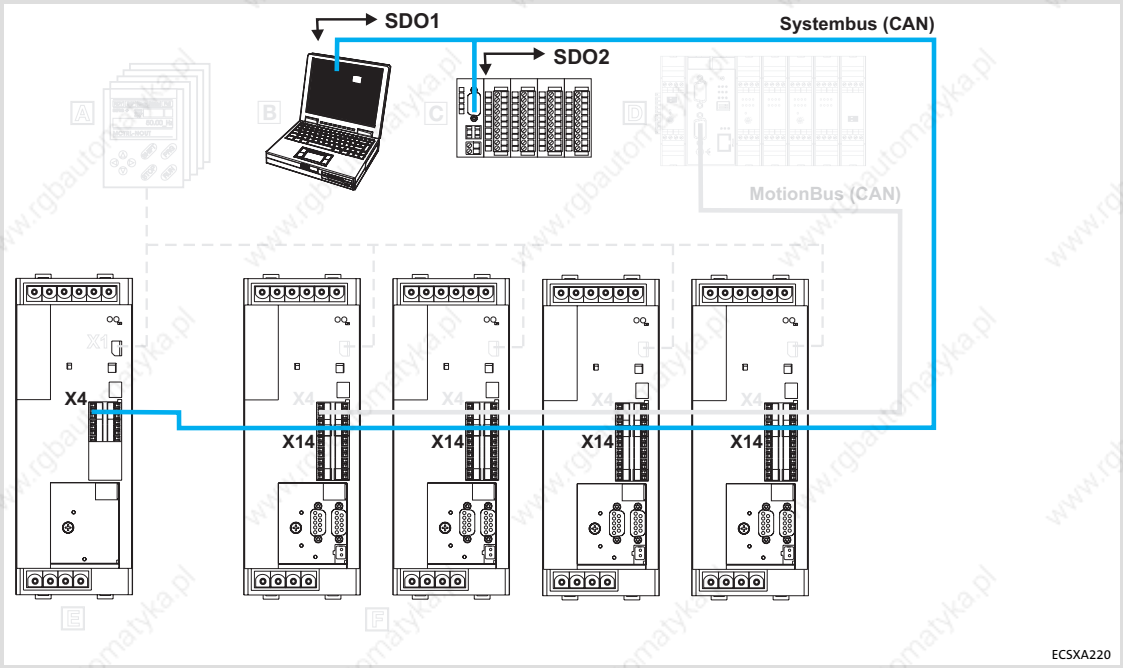

Fig. 14-12 Parameter data channels for parameterising ECS

Parameters

- ► are values which are stored under codes in the Lenze controllers.
- ► are set e.g. during initial commissioning or while changing materials in a machine.
- ► are transmitted with low priority.

Parameter data are transmitted as SDOs (Service Data Objects) via the system bus (CAN) and acknowledged by the receiver. The SDOs enable the writing and reading access to the object directory.

The CAN bus interfaces X4 and X14 have two separated parameter data channels each which enable the simultaneous connection of different devices for parameter setting and diagnostics.

The codes for parameter setting and diagnostics of the automation interface (AIF) X1 as well as the CAN bus interfaces X4 and X14 are divided into separate ranges:

Interface		Code range
X1	Automation interface (AIF)	C23xx
X4	ECSxS/P/M: MotionBus (CAN) ECSxA/E: System bus (CAN)	C03xx
X14	System bus (CAN) ● Interface is not available for ECSxE.	C24xx

14.7.4.1 User data

Structure of the parameter data telegram

User data (up to 8 bytes)							
1. byte	2. byte	3. byte	4. byte	5. byte	6. byte	7. byte	8. byte
Command	**Index** Low byte	**Index** High byte	**Subindex**	**Data 1**	**Data 2**	**Data 3**	**Data 4**
				Low word		High word	
				Low byte	High byte	Low byte	High byte
				Display			

Note!
The user data is shown in motorola format.
Examples for parameter data transfer can be found from 📖 424.

Command

The command contains the services for writing and reading the parameters and information on the length of the user data:

	Bit 7 MSB	**Bit6**	**Bit5**	**Bit4**	**Bit3**	**Bit 2**	**Bit 1**	**Bit 0** LSB
Command	Command specifier (cs)			toggle (t)	Length		e	E
Write request	0	0	1	0	00 = 4 bytes 01 = 3 bytes 10 = 2 bytes 11 = 1 byte		1	1
Write response	0	1	1	0			0	0
Read request	0	1	0	0			0	0
Read response	0	1	0	0			1	1
Error response	1	0	0	0	0	0	0	0

Tip!
Further commands are defined in the CANopen specification DS301, V4.02 (e.g. segmented transfer).

The command must contain the following information:

Command	4-byte data (5. ... 8. byte)		2-byte data (5. and 6. byte)		1-byte data (5. byte)		Block	
	hex	dec	**hex**	dec	**hex**	dec	**hex**	dec
Write request (Transmit parameter to the controller)	**23**	35	**2B**	43	**2F**	47	**21**	33
Write response (Acknowledgement, controller response to write request)	**60**	96	**60**	96	**60**	96	**60**	96
Read request (Request to read a controller parameter)	**40**	64	**40**	64	**40**	64	**40**	64
Read response (Response to read request with current value)	**43**	67	**4B**	75	**4F**	79	**41**	65
Error response (The controller reports a communication error)	**80**	128	**80**	128	**80**	128	**80**	128

”Error response” command: In case of a communication error an ”Error response” is generated by the addressed node. This telegram always contains the value ”6” in Data 4 and an error code in Data 3.

The error codes are standardised acc. to DS301, V4.02.

Addressing by index and subindex

The parameter or Lenze code is addressed with these bytes according to the following formula:

Index = 24575 - (Lenze code number)

Data 1 ... Data 4

Parameter value length depending on the data format			
Parameter value **(Length: 1 byte)**	00	00	00
Parameter value **(length: 2 bytes)**			
Low byte	High byte	00	00
Parameter value **(length: 4 bytes)**			
Low word		High word	
Low byte	High byte	Low byte	High byte

Note!

Lenze parameters are mainly represented as data type FIX32 (32 bit value with sign, decimally with four decimal positions). To obtain integer values, the desired parameter value must be multiplied by $10{,}000_{dec}$.

The parameters C0135 and C0150 must be transmitted bit-coded and without a factor.

Error messages

User data (up to 8 bytes)							
1st byte	2nd byte	3rd byte	4th byte	5th byte	6th byte	7th byte	8th byte
Command	Index Low byte	Index High byte	Subindex	**Display**			

- Byte 1:
  In the **command** byte the code **128_{dec}** or **80_{hex}** indicates that a fault has occurred.
- Byte 2, 3 and 4:
  In these bytes the **index** (byte 2 and 3) and **subindex** (byte 4) of the code in which an error occurred are entered.
- Byte 5 to 8:
  In the data bytes 5 to 8 the **error code** is entered. The structure of the error code is reversed to the read direction.

Example:
The representation of the error code 06 04 00 41_{hex} in the bytes 5 to 8

← Read direction of the error code

41	**00**	**04**	**06**
5. byte	6. byte	7. byte	8. byte
Low word		High word	
Low byte	High byte	Low byte	High byte

Possible error codes:

Command	7th byte	8th byte	Meaning
80_{hex}	6	6	Wrong index
80_{hex}	5	6	Wrong subindex
80_{hex}	3	6	Access denied

14.7.4.2 Examples of the parameter data telegram

Reading parameters

The heatsink temperature C0061 (value of 43 °C) is to be read from the controller with node address 5 via the parameter data channel 1.

- Identifier calculation

Identifier from SDO1 to controller	Calculation
1536 + node address	1536 + 5 = 1541

- Command ”Read Request” (request to read a parameter from the controller)

Command	Value
Read request	**40_{hex}**

- Index calculation:

Index	Calculation
24575 - code number	24575 - 61 = 24514 = $5FC2_{hex}$

- Subindex: 0
- Telegram to controller

Identifier	User data							
	Command	**Index** Low byte	**Index** High byte	**Subindex**	**Data 1**	**Data 2**	**Data 3**	**Data 4**
1541	40_{hex}	$C2_{hex}$	$5F_{hex}$	00	00	00	00	00

► Telegram from controller

Identifier	User data							
	Command	**Index** Low byte	**Index** High byte	**Subindex**	**Data 1**	**Data 2**	**Data 3**	**Data 4**
1413	43_{hex}	$C2_{hex}$	$5F_{hex}$	00	$B0_{hex}$	$8F_{hex}$	06_{hex}	00

– Command:
  ”Read Response” (response to the read request) = 43_{hex}
– Identifier:
  SDO1 from controller (= 1408) + node address (= 5) = 1413
– Index of the read request:
  $5FC2_{hex}$
– Subindex:
  0
– Data 1 to data 4:
  00 06 8F B0 = 430.000 → 430.000 : 10.000 = 43 °C

Writing parameters

The acceleration time C0012 (parameter set 1) of the controller with the node address 1 is to be changed to 20 seconds via the SDO 1 (parameter data channel 1).

► Identifier calculation

Identifier from SDO1 to controller	Calculation
1536 + node address	1536 + 1 = 1537

► Command ”Write Request” (transmit parameter to drive)

Command	Value
Write request	**23_{hex}**

► Index calculation:

Index	Calculation
24575 - code number	24575 - 12 = 24563 = $5FF3_{hex}$

► Subindex: 0

► Calculation of the acceleration time

Data 1 ... 4	Calculation
Value for acceleration time	20 s · 10.000 = 200.000_{dec} = 00 03 0D 40_{hex}

► Telegram to controller

Identifier	User data							
	Command	Index Low byte	Index High byte	Subindex	Data 1	Data 2	Data 3	Data 4
1537	23_{hex}	$F3_{hex}$	$5F_{hex}$	00	40_{hex}	$0D_{hex}$	03_{hex}	00

► Telegram from controller if executed faultlessly

Identifier	User data							
	Command	Index Low byte	Index High byte	Subindex	Data 1	Data 2	Data 3	Data 4
1409	60_{hex}	$F3_{hex}$	$5F_{hex}$	00	00	00	00	00

– Command:
”Write Response” (response of the controller (acknowledgement)) = 60_{hex}

– Identifier:
SDO1 from controller (= 1408) + node address (= 1) = 1409

14.7.5 Addressing of the parameter and process data objects

The CAN bus system is based on a message-oriented data exchange between a transmitter and many receivers. Thus, all nodes can transmit and receive messages at the same time.

The identifier in the CAN telegram – also called *COB-ID (Communication Object Identifier)* controls which node is to receive a transmitted message. With the exception of the network management (NMT) and the sync telegram (Sync) the identifier contains the node address of the drive besides the basic identifier:

Identifier (COB-ID) = basic identifier + adjustable node address (node ID)

The basic identifier is preset with the following values:

Object			Direction		Basic identifier	
			to the ECS module	from the ECS module	dec	hex
NMT					0	0
Sync					128	80
PDO1 (Process data channel 1)	RPDO1	XCAN1_IN CAN1_IN CANaux1_IN	X		512	200
	TPDO1	XCAN1_OUT CAN1_OUT CANaux1_OUT		X	384	180
PDO2 (Process data channel 2)	RPDO2	XCAN2_IN CAN2_IN CANaux2_IN	X		640	280
	TPDO2	XCAN2_OUT CAN2_OUT CANaux2_OUT		X	641	281
PDO3 (Process data channel 3)	RPDO3	XCAN3_IN CAN3_IN CANaux3_IN	X		768	300
	TPDO3	XCAN3_OUT CAN3_OUT CANaux3_OUT		X	769	301
SDO1 (Parameter data channel 1)			X		1536	600
				X	1408	580
SDO2 (Parameter data channel 2)			X		1600	640
				X	1472	5C0
Node guarding			X		1792	700

Note!

The ”9.2.1 Setting of CAN node address and baud rate” chapter contains information on

► Setting of the node address (📖 161).
► Individual addressing (📖 164).

14.8 Overview of accessories

The accessories are not included in the scope of supply. Lenze's basic devices and accessories are carefully matched to each other. With the basic device and the accessories, all components for a complete drive system are available. The component selection must be matched to the respective application.

14.8.1 Connector sets

To make purchasing easy, the connector sets are available as separate delivery units for the ECS power supply, capacitor and axis modules:

- ECSZ**E**000X0B (connector set for ECS power supply modules)
- ECSZ**K**000X0B (connector set for ECS capacitor modules)
- ECSZ**A**000X0B (connector set for ECS axis modules)

14.8.2 Shield mounting kit

The shield mounting kit ECSZS000X0B001 contains components for reliable and quick fixing of the cable shields. The scope of supply includes:

- Shield sheet for motor cable
- Wire clamp for shield connection of motor cable
- Wire clamp for shield connection of control cables
- Wire clamp for shield connection of motor monitoring cable

14.8.3 Power supply modules

For generating the DC-bus voltage for the axis modules:

- ECSxE012
- ECSxE020
- ECSxE040

x	Design/mounting technique:	E = standard installation C = cold-plate technique D = push-through technique

14.8.4 Capacitor modules

For backing up the DC-bus voltage for the drive system:

- ECSXK001
- ECSxK002

x	Design/mounting technology:	E = standard installation C = cold-plate technique D = push-through technique

14.8.5 Components for operation and communication

Operating and communication modules

Operating/communication module	Type/order number	Can be used together with	
		ECSxE	ECSxS/P/M/A
Keypad XT	EMZ9371BC	✓	✓
Diagnosis terminal (keypad XT with hand-held)	E82ZBBXC	✓	✓
LECOM-A (RS232)	EMF2102IB-V004	✓	✓
LECOM-B (RS485)	EMF2102IB-V002	✓	✓
LECOM-A/B (RS232/485)	EMF2102IB-V001	✓	✓
LECOM-LI (optical fibre)	EMF2102IB-V003	✓	✓
LON	EMF2141IB	–	✓
INTERBUS	EMF2113IB	–	✓
PROFIBUS-DP	EMF2133IB	–	✓
CANopen/DeviceNet	EMF2175IB	–	✓

System bus components

PC system bus adapter	Type/order number
Voltage supply via DIN connection	EMF2173IB
Voltage supply via PS2 connection	EMF2173IB-V002
Voltage supply via PS2 connection (electrical isolation to CAN bus)	EMF2173IB-V003
USB system bus adapter	EMF2177IB

Components for digital frequency coupling

Digital frequency distributor/cables	Type/order number
Digital frequency distributor	EMF2132IB
Master digital frequency cable	EYD0017AxxxxW01W01 [1)]
Slave digital frequency cable	EYD0017AxxxxW01W01 [1)]

1) ”xxxx” = Cable length in decimetre (example: ”xxxx” = ”0015” → length = 15 dm)

14.8.6 Brake resistor

Assignment of external brake resistors

Brake resistor	Ω	P_d [kW]	Power supply module								
			ECSEE...			ECSDE...			ECSCE...		
			012	020	040	012	020	040	012	020	040
ERBM082R100W	82	0.10							●		
ERBM039R120W	39	0.12								●	
ERBM020R150W	20	0.15									●
ERBD082R600W	82	0.60	●			●			●		
ERBD047R01K2	47	1.20		●			●			●	
ERBD022R03K0	22	3.00			●			●			●
ERBS082R780W	82	0.78	●			●			●		
ERBS039R01K6	39	1.64		●			●			●	
ERBS020R03K2	20	3.20			●			●			●

P_d Continuous power

Brake resistors of type ERBM...

Brake resistors with specifically adapted pulse capability in IP50 design

Rated data	Type	Brake resistor		
		ERBM082R100W	ERBM039R120W	ERBM020R150W
Resistance	R_B [Ω]	82	39	20
Continuous power	P_d [W]	100	120	150
Thermal capacity	C_B [kWs]	3	6	13
Max. on-time	t_e [s]	5		
Required recovery time	t_a [s]	90		
Operating voltage	U_{max} [V_{DC}]	1000		
Max. braking power	P_{Bmax} [kW]	$P_{Bmax} = \frac{\text{Thermal capacity } C_B}{\text{On} - \text{time}}$		

Brake resistors of type ERBD...

Brake resistors with increased power loss in IP20 design (protection against accidental contact acc. to NEMA 250 type 1)

Rated data	Type	Brake resistor		
		ERBD082R600W	ERBD047R01K2	ERBD022R03K0
Resistance	R_B [Ω]	82	47	22
Continuous power	P_d [W]	600	1200	3000
Thermal capacity	C_B [kWs]	87	174	375
Max. on-time	t_e [s]	15		
Required recovery time	t_a [s]	135		
Operating voltage	U_{max} [V_{DC}]	800		
Max. braking power	P_{Bmax} [kW]	$P_{Bmax} = \frac{\text{Thermal capacity } C_B}{\text{On} - \text{time}}$		

Brake resistors of type ERBS...

Brake resistors with increased power loss in IP65 design (NEMA 250 type 4x)

Rated data	Type	Brake resistor		
		ERBS082R780W	ERBS039R01K6	ERBS020R03K2
Resistance	R_B [Ω]	82	39	20
Continuous power	P_d [W]	780	1640	3200
Thermal capacity	C_B [kWs]	117	246	480
Max. on-time	t_e [s]	15		
Required recovery time	t_a [s]	135		
Operating voltage	U_{max} [V_{DC}]	800		
Max. braking power	P_{Bmax} [kW]	$P_{Bmax} = \frac{\text{Thermal capacity } C_B}{\text{On} - \text{time}}$		

14.8.7 Mains fuses

Fuses are not offered by Lenze. Please use standard fuses.

Observe the national and regional regulations (VDE, UL, EVU, ...).

Only circuit-breakers or UL-approved fuses can be used for cable protection.

In UL-approved systems, only UL-approved cables, fuses and fuse holders are to be used.

14.8.8 Mains chokes

It is not mandatory to use a mains choke for operating the ECS modules. The respective application determines whether a mains choke is required or not.

Advantages when using a mains choke:

- ► Lower system perturbations
  - – The waveform of the mains current is approximated to the sinusoidal shape.
  - – Reduction of the effective mains current by up to 25%.
  - – Reduction of the mains, cable and fuse load.
- ► The effective DC-bus current also decreases by up to 25%.
- ► Increased service life of the connected axis modules
  - – A mains choke reduces the AC current load of the DC-bus capacitors and thus increases their service life.
- ► Low-frequency radio interference voltages are reduced.

Please note:

- ► With mains choke operation the maximally possible output voltage does not fully reach the value of the mains voltage.
- ► For operation of drives for accelerating duty with high peak currents, it is recommended to use mains chokes with linear L/I characteristic (Lenze types ELN3...).
- ► The choke rating is to be checked and adapted to the respective conditions.

Mains chokes for the power supply modules:

Power supply module type	Mains choke type	I_r [A]	L_r [mH]	Short-circuit voltage (U_k)
ECSxE012	ELN3-0150H024	3 x 24	3 x 1.5	4 %
ECSxE020	ELN3-0088H035	3 x 35	3 x 0.88	
ECSxE040	ELN3-0055H055	3 x 55	3 x 0.55	

14.8.9 RFI filters

According to the application, different measures for reducing the mains current and for radio interference suppression are required on the supply side for servo systems. As a rule, these measures are not mandatory, but protect the universal application of a servo system.

Lenze offers a built-on filter for each power supply module for the interference level A. The RFI filters are designed for the ECS power supply module assigned and up to 10 axes with a motor cable length of 25 m each (Lenze system cable). The interference level A is observed as long as the motor cable length per axis module is 25 m at a maximum (Lenze sytem cables) and the number of the ECS axis modules is maximally 10.

RFI filter type	ECS power supply module type
ECSZZ020X4B	ECSxE012
	ECSxE020
ECSZZ040X4B	ECSxE040

Type of RFI filter	U [V]	I [A]	P_{loss} [W]	Weight [kg]
ECSZZ020X4B	3/PE AC 500 V at 50 ... 60 Hz	16	6.2	3.0
ECSZZ040X4B		32	9.3	

U Rated mains voltage
I Rated mains current
P_{loss} Power loss

14.8.10 Motors

Matched motors can be obtained under the following type designations:

- ► MCA series asynchronous motor (high speeds by means of wide field weakening range)
- ► MCS series synchronous motor (for high-dynamic applications)
- ► MDxMA series asynchronous motor (cost-effective)

15 Index

A

B

C

D

E

F

G

K

L

M

N

O

P

Q

R

S

T

U

V

W

X

Lenze Drive Systems GmbH
Hans-Lenze-Straße 1
D-31855 Aerzen
Germany

☎ +49 (0) 51 54 82-0
☎ Service 00 80 00 24 4 68 77 (24 h helpline)
Service +49 (0) 51 54 82-1112
E-Mail Lenze@Lenze.de
Internet www.Lenze.com

EDBCSXA064
EN 2.0

TD17

10 9 8 7 6 5 4 3 2 1