INDIVIDUAL PERFORMANCE CHARACTERISTICS (cont.)

0...5 V output (V_S = 15 V, R_L > 100 kΩ, t_{amb} = 25°C)

Characteristics		Min.	Typ.	Max.	Unit
Zero pressure offset	CT...7N... all others	2.45 -0.05	2.5 0	2.55 0.05	V
Full scale span[7]	CT...7N... all others	2.45 4.95	2.5 5.0	2.55 5.05	
Output impedance				25	Ω
Current consumption (no load)			4	8.5	mA

4...20 mA output (V_S = 15 V, R_L = 100 Ω, t_{amb} = 25°C)

Characteristics		Min.	Typ.	Max.	Unit
Zero pressure offset	CT...7N... all others	11.8 3.8	12.0 4.0	12.2 4.2	mA
Full scale span[7]	CT...7N... all others	7.8 15.8	8.0 16.0	8.2 16.2	
Power consumption (I_L = 20 mA)			260		mW

LOAD LIMITATION

4...20 mA output version

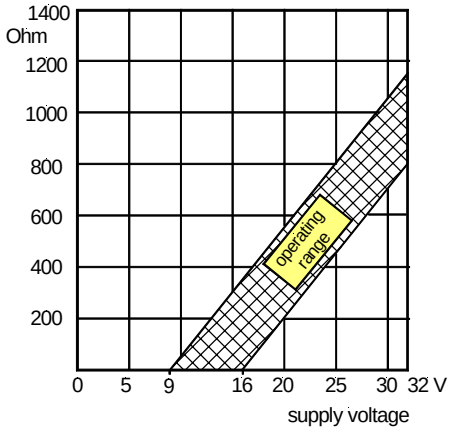

ELECTROMAGNETIC CAPABILITY[8]

	Test conditions		Criterion	Interference
Radiated, radio frequency electromagnetic field immunity (RFI)	EN61000-4-3:	10 V/m, 80 to 1000 MHz 80 % AMC (1 kHz)	A	<1 %FSO
Electrical fast transient / burst immunity (EFT)	EN61000-4-4:	±2 kV	B	<1 %FSO
Electrostatic discharge immunity test (ESD)	EN61000-4-2:	±4 kV, contact discharge ±8 kV, air discharge	B	<1 %FSO
Immunity to conducted disturbances induced by radio-frequency fields	EN61000-4-6:	0.15 to 80 MHz 10 V, 80 % AMC (1 kHz)	A	<1 %FSO

OUTLINE DRAWING

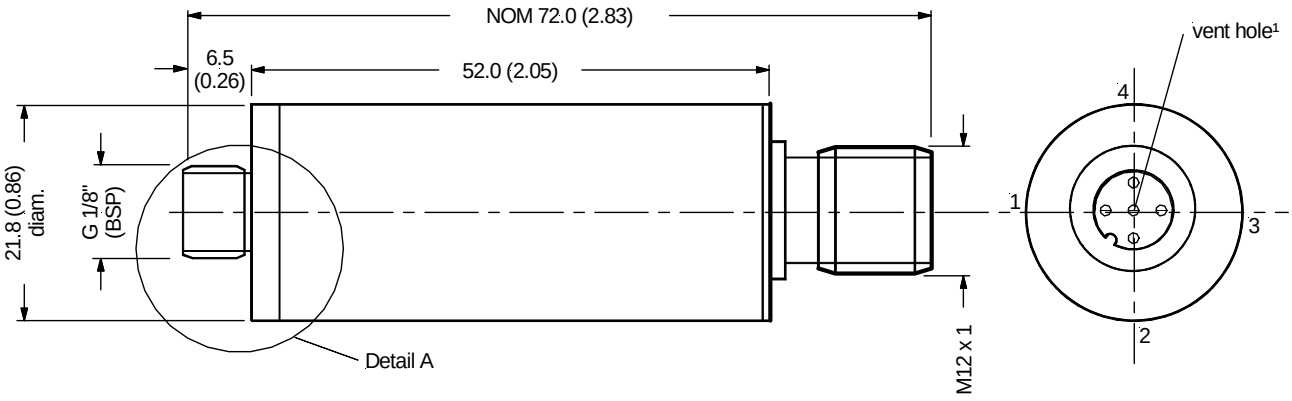

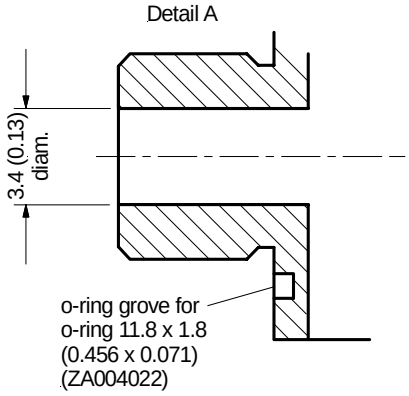

Pin	Output	
	0...10 V, 0.5...4.5 V, 0...5 V	4...20 mA
1	+Vs	+Vs
2	Vout	N/C
3	Case	Case
4	-Vs	-Vs

mass: 60 g

dimensions in mm (inches)