UVA and UVB Light Sensor with I²C Interface

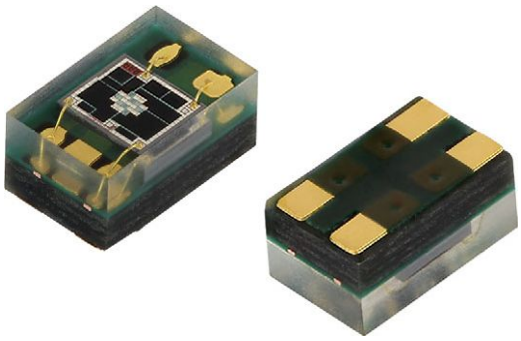

FEATURES

- Package type: surface mount
- Dimensions (L x W x H in mm): 2.0 x 1.25 x 1.0
- Integrated modules: ultraviolet sensor (UV), and signal conditioning IC
- Converts solar UV light intensity to digital data
- Excellent UVA and UVB sensitivity
- Reliable performance of UV radiation measurement under long time solar UV exposure
- 16-bit resolution per channel
- UVA and UVB individual channel solution
- Low power consumption I²C protocol (SMBus compatible) interface
- Package: OPLGA
- Temperature compensation: -40 °C to +85 °C
- Output type: I²C bus
- Operation voltage: 1.7 V to 3.6 V
- Material categorization: for definitions of compliance please see www.vishay.com/doc?99912

Pb-free
e4
RoHS COMPLIANT
HALOGEN FREE
GREEN (5-2008)

DESCRIPTION

The VEML6075 senses UVA and UVB light and incorporates photodiode, amplifiers, and analog / digital circuits into a single chip using a CMOS process. When the UV sensor is applied, it is able to detect UVA and UVB intensity to provide a measure of the signal strength as well as allowing for UVI measurement.

The VEML6075 provides excellent temperature compensation capability for keeping the output stable under changing temperature. VEML6075's functionality is easily operated via the simple command format of I²C (SMBus compatible) interface protocol. VEML6075's operating voltage ranges from 1.7 V to 3.6 V. VEML6075 is packaged in a lead (Pb)-free 4 pin OPLGA package which offers the best market-proven reliability.

APPLICATIONS

- Handheld device
- Notebook
- Consumer device
- Industrial and medical application

PRODUCT SUMMARY

PART NUMBER	OPERATING VOLTAGE RANGE (V)	I²C BUS VOLTAGE RANGE (V)	PEAK SENSITIVITY UVA, UVB (nm)	RANGE OF SPECTRAL BANDWIDTH $\lambda_{0.5}$ (nm)	OUTPUT CODE
VEML6075	1.7 to 3.6	1.7 to 3.6	365, 330	± 10	16 bit, I²C

Note

(1) Adjustable through I²C interface

ORDERING INFORMATION

ORDERING CODE	PACKAGING	VOLUME (1)	REMARKS
VEML6075	Tape and reel	MOQ: 2500 pcs	2.0 mm x 1.25 mm x 1.0 mm

Note

(1) MOQ: minimum order quantity

For technical questions, contact: sensorstechsupport@vishay.com
THIS DOCUMENT IS SUBJECT TO CHANGE WITHOUT NOTICE. THE PRODUCTS DESCRIBED HEREIN AND THIS DOCUMENT ARE SUBJECT TO SPECIFIC DISCLAIMERS, SET FORTH AT www.vishay.com/doc?91000

ABSOLUTE MAXIMUM RATINGS (T_{amb} = 25 °C, unless otherwise specified)					
PARAMETER	**TEST CONDITION**	**SYMBOL**	**MIN.**	**MAX.**	**UNIT**
Supply voltage		V_{DD}	0	3.6	V
Operation temperature range		T_{amb}	-40	+85	°C
Storage temperature range		T_{stg}	-40	+85	°C

RECOMMENDED OPERATING CONDITIONS (T_{amb} = 25 °C, unless otherwise specified)					
PARAMETER	**TEST CONDITION**	**SYMBOL**	**MIN.**	**MAX.**	**UNIT**
Supply voltage		V_{DD}	1.7	3.6	V
Operation temperature range		T_{amb}	-40	+85	°C
I^2C bus operating frequency		$f_{(I2CCLK)}$	10	400	kHz

PIN DESCRIPTIONS			
PIN ASSIGNMENT	**SYMBOL**	**TYPE**	**FUNCTION**
1	GND	I	Ground
2	SDAT	I / O (open drain)	I^2C data bus data input / output
3	SCLK	I	I^2C digital bus clock input
4	V_{DD}	I	Power supply input

BLOCK DIAGRAM

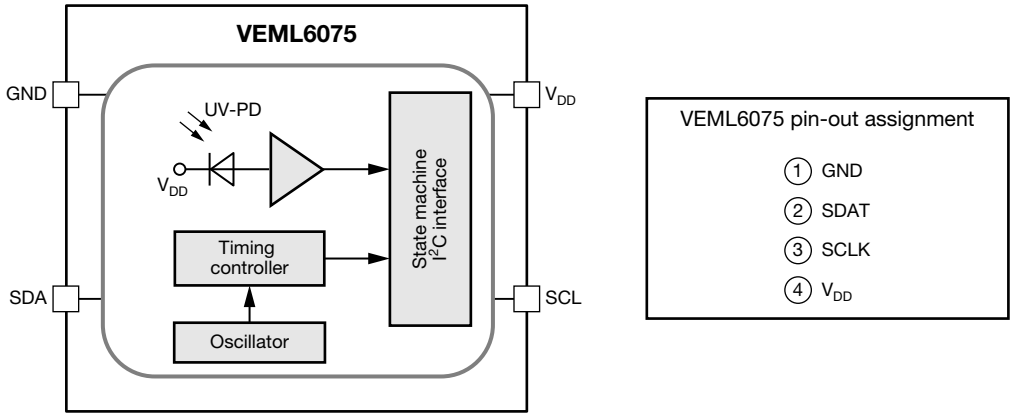

BASIC CHARACTERISTICS (T_{amb} = 25 °C, unless otherwise specified)							
PARAMETER		**TEST CONDITION**	**SYMBOL**	**MIN.**	**TYP.**	**MAX.**	**UNIT**
Supply operation voltage			V_{DD}	1.7	-	3.6	V
Supply current		V_{DD} = 1.8 V	I_{DD}	-	480	-	µA
I^2C signal input	Logic high	V_{DD} = 3.3 V	V_{IH}	1.5	-	-	V
	Logic low		V_{IL}	-	-	0.8	
I^2C signal input	Logic high	V_{DD} = 2.6 V	V_{IH}	1.4	-	-	V
	Logic low		V_{IL}	-	-	0.6	
Operating temperature			T_{amb}	-40	-	+85	°C
Shutdown current		Light condition = dark; V_{DD} = 1.8 V, T_{amb} = 25 °C	I_{DD} (SD)	-	800	-	nA
UVA responsivity		I_T = 50 ms (1)		-	0.93	-	counts/µW/cm²
UVB responsivity		I_T = 50 ms (2)		-	2.1	-	counts/µW/cm²
Visible / infrared response		W-LED / IRED (940 nm)		-	0.5	< 1	%

Notes

(1) Nichia NCSU033X (365 nm)
(2) UVTOP310TO39HS (315 nm)

For technical questions, contact: sensorstechsupport@vishay.com
THIS DOCUMENT IS SUBJECT TO CHANGE WITHOUT NOTICE. THE PRODUCTS DESCRIBED HEREIN AND THIS DOCUMENT ARE SUBJECT TO SPECIFIC DISCLAIMERS, SET FORTH AT www.vishay.com/doc?91000