Reproducibility	≤ 2 % [3] [4]
Temperature drift (of S_r)	± 10 %
EMC	According to EN 60947-5-2
Continuous current I_a	≤ 200 mA
Short-circuit protection	✓
Reverse polarity protection	✓
Power-up pulse protection	✓
Shock and vibration resistance	30 g, 11 ms/10 Hz ... 55 Hz, 1 mm
Ambient operating temperature	–25 °C ... +75 °C
Housing material	Metal, Nickel-plated brass
Sensing face material	Plastic, Plastic
Housing length	52 mm
Thread length	22 mm
Tightening torque, max.	≤ 100 Nm
UL File No.	NRKH.E181493

[1] At I_a max.
[2] Without load.
[3] Ub and Ta constant.
[4] Of Sr.

Reduction factors

Note	The values are reference values which may vary
St37 steel (Fe)	1
Stainless steel (V2A, 304)	Approx. 0.8
Aluminum (Al)	Approx. 0.45
Copper (Cu)	Approx. 0.4
Brass (Br)	Approx. 0.4

Installation note

Remark	Associated graphic see "Installation"
A	30 mm
B	60 mm
C	30 mm
D	60 mm
E	40 mm
F	160 mm

Classifications

ECl@ss 5.0	27270101
ECl@ss 5.1.4	27270101
ECl@ss 6.0	27270101
ECl@ss 6.2	27270101
ECl@ss 7.0	27270101
ECl@ss 8.0	27270101

ECl@ss 8.1	27270101
ECl@ss 9.0	27270101
ETIM 5.0	EC002714
ETIM 6.0	EC002714
UNSPSC 16.0901	39122230

Installation note

Non-flush installation

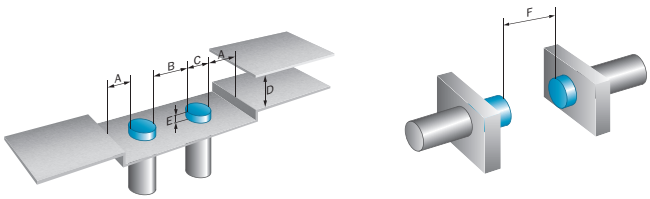

Connection diagram

Cd-007

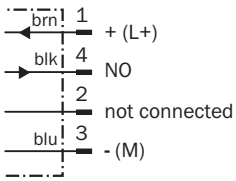

Dimensional drawing (Dimensions in mm (inch))

IME30 Short-body housing, connector, non-flush

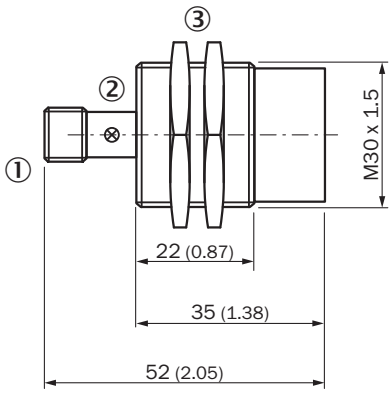

① Connection
② Indication LED
③ Fastening nuts (2x); width across 36, metal