gentech
SWITCHING AND SENSING SOLUTIONS

GENTECH INTERNATIONAL LTD

Grangestone Industrial Estate
Girvan, Ayrshire KA26 9PS
United Kingdom

Telephone: +44 1465 713581
Fax: +44 1465 714974

E-Mail: info@gentechsensors.com
Web Site www.gentechsensors.com

LIQUID LEVEL SENSORS

RS Series – Right Angle Liquid Level Sensor

RS801-51

Design Features

- *High or low level sensing*
- *Internal & External fit*
- *Reed Switch reliability*
- *Silicone sealing components*
- *Easy installation*

Product Comments

- *UL listed model, File E98428*
- *Normally open or normally closed by float reversal*
- *Suitable for a wide range of liquids*
- *Side entry with Vertical Stem/Float travel*
- *Polypropylene Materials*

Typical Applications

- *Waste Water Level*
- *Coolant level indication*
- *Drinking water level*
- *Cooling systems*
- *Water high or low Level*

Material, Design and Operation

Mounting:	Side Entry
Material:	Polypropylene
Fitting	Internal & External Fitting
Contact Form:	Form A – SPST
Contact Material:	Ruthenium
Maximum Switching Volts:	100 VAC
Maximum Switching Current:	1.0
Maximum Power:	15 Watts
Housing Temperature Range ˚C:	80
Housing Material:	Glass Filled Polypropylene
Housing Colour:	Charcoal
Float Material:	Glass Filled Polypropylene
Connection Type:	Stripped Cables
Cable Type:	2 x 18AWG 32/0.2mm PVC insulated 0.5m long to UL/CSA/BS6361
Cable Colour:	Black/Black
Minimum Specific Gravity:	0.85
Operating Temperature Range ˚C:	80
Operating Pressure BAR:	4
Sealing Components:	Silicone
Mounting Shock:	50g for 11ms duration
Mounting Vibration:	35g up to 500Hz
Operate Mode:	N/C with float down

Line Drawing

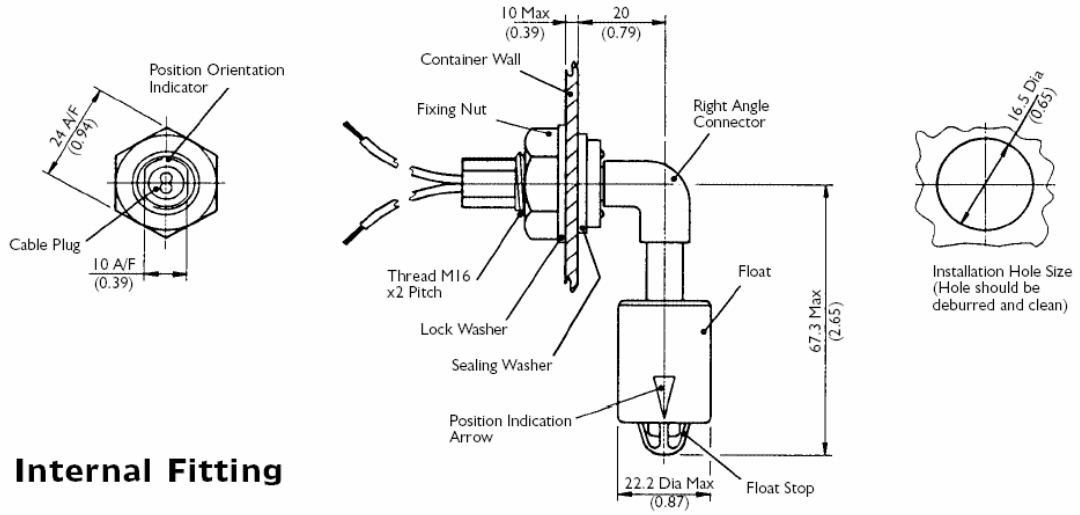

Internal Fitting

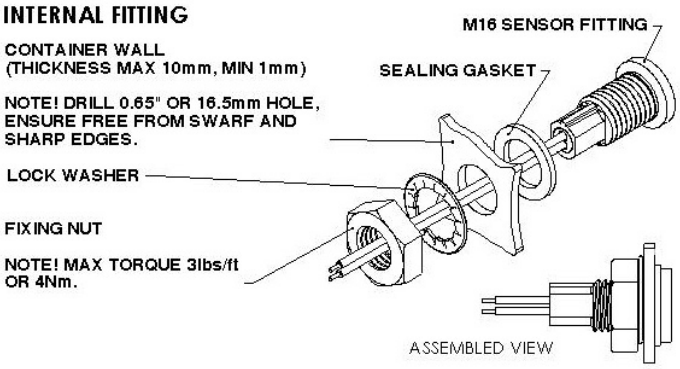

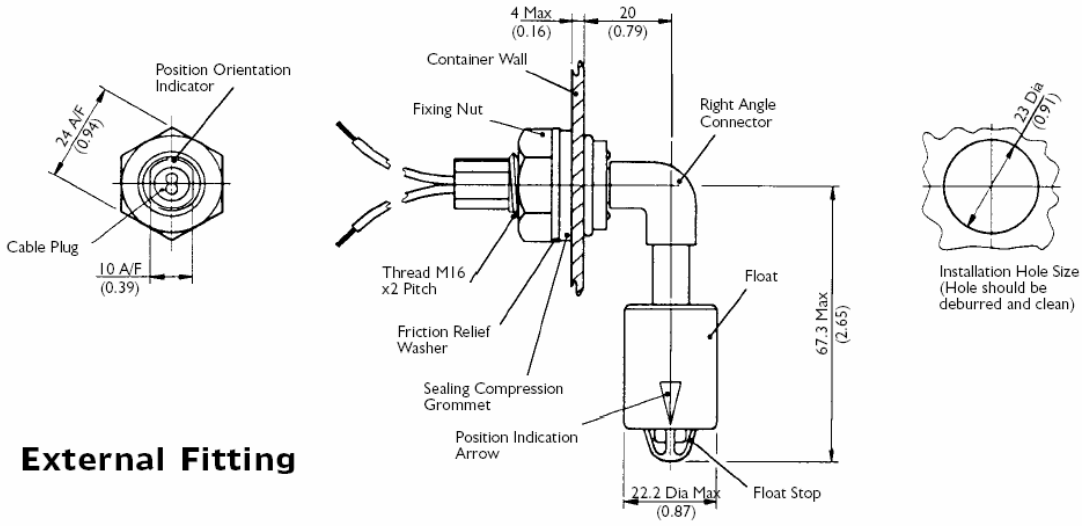
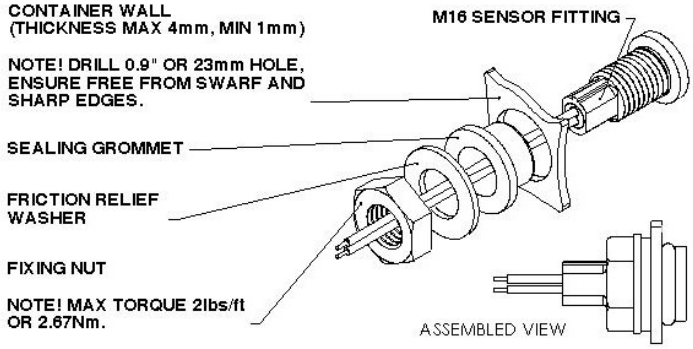
External Fitting