Changes for the Better

MITSUBISHI ELECTRIC

CNC
AC SERVO/SPINDLE
MDS-A/B Series

SPECIFICATIONS MANUAL

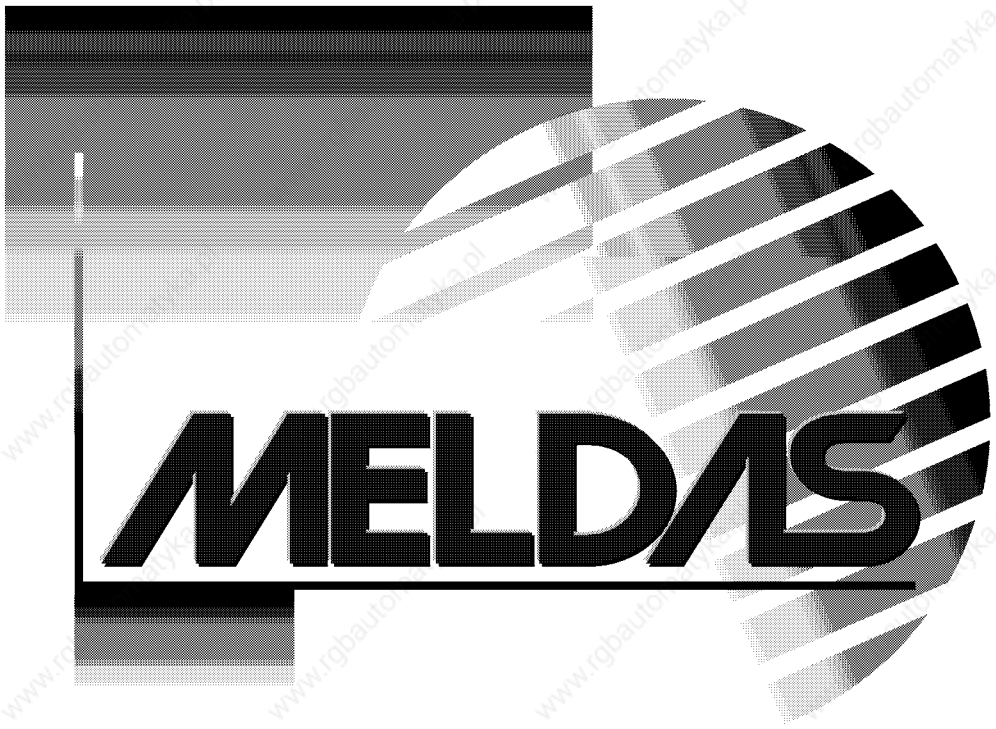

BNP-B3759B(ENG)

Introduction

Thank you for selecting the Mitsubishi numerical control unit.
This instruction manual describes the handling and caution points for using this AC servo/spindle.
Incorrect handling may lead to unforeseen accidents, so always read this instruction manual thoroughly to ensure correct usage.
Make sure that this instruction manual is delivered to the end user.
Always store this manual in a safe place.
All specifications for the MDS-B Series are described in this manual. However, each CNC may not be provided with all specifications, so refer to the specifications for the CNC on hand before starting use.

Notes on Reading This Manual

(1) Since the description of this specification manual deals with NC in general, for the specifications of individual machine tools, refer to the manuals issued by the respective machine manufacturers. The "restrictions" and "available functions" described in the manuals issued by the machine manufacturers have precedence to those in the manual.
(2) The manual describes as many special operations as possible, but it should be kept in mind that items not mentioned in this manual cannot be performed.
(3) Of the MDS Series, the CV, SP, V1 and V2 units have been sequentially changed from the MDS-A Series to the MDS-B Series during February to May 1996.
All of the above models are produced as the MDS-B Series, but to express the difference from the MDS-A Series, the MDS-A Series is also described.
If there is no differentiating expression between the A Series and B Series, the item is common for the A Series and B Series.
An effort has been made to describe the A Series and B Series type for the common items. However, due to space restrictions, this is abbreviated as A/B-V1.
If only the A Series or B Series expression is used, that item is targeted only for the respective series.

Precautions for safety

Please read this manual and auxiliary documents before starting installation, operation, maintenance or inspection to ensure correct usage. Thoroughly understand the device, safety information and precautions before starting operation.

The safety precautions in this instruction manual are ranked as "WARNING" and "CAUTION".

⚠ DANGER

⚠ WARNING When a dangerous situation may occur if handling is mistaken leading to fatal or major injuries.

⚠ CAUTION When a dangerous situation may occur if handling is mistaken leading to medium or minor injuries, or physical damage.

Note that some items described as **⚠ CAUTION** may lead to major results depending on the situation. In any case, important information that must be observed is described.

The numeric control unit is configured of the control unit, operation board, servo amplifier, spindle amplifier, power supply + servo drive or spindle drive, servomotor, and spindle motor, etc.

In this manual, the following items are generically called the "servomotor".
- Servomotor
- Spindle motor

In this manual, the following items are generically called the "servo amplifier".
- Servo amplifier
- Spindle amplifier
- Power supply + servo drive or spindle drive

Changes in terminal names

The terminal names have been changed in two stages as shown below.

	Prior to March 95	April 95 to March 96	Following April 96 (MDS-B Series)
Terminal name	R	R / L1	L1
	S	S / L2	L2
	T	T / L3	L3
	P	L+ / P	L+
	N	L– / N	L–
	Ro	L11 / Ro	L11
	So	L21 / So	L21
	G	G / ⏚	⏚

⚠ DANGER

⚠ WARNING

1. Electric shock prevention

Do not open the front cover whole the power is ON or during operation. Failure to observe this could lead to electric shocks.

Do not operate the unit with the front cover removed. The high voltage terminals and charged sections will be exposed, and can cause electric shocks.

Do not remove the front cover even when the power is OFF unless carrying out wiring work or periodic inspections. The inside of the servo amplifier is charged, and can cause electric shocks.

Wait at least 10 minutes after turning the power OFF before starting wiring or inspections. Failure to observe this could lead to electric shocks.

Ground the servo amplifier and servomotor with Class 3 grounding or higher.

Wiring and inspection work must be done by a qualified technician.

Wire the servo amplifier and servomotor after installation. Failure to observe this could lead to electric shocks.

Do not touch the switches with wet hands. Failure to observe this could lead to electric shocks.

Do not damage, apply forcible stress, place heavy items or engage the cable. Failure to observe this could lead to electric shocks.

⚠ CAUTION

1. Fire prevention

Install the servo amplifier, servomotor and regenerative resistor on noncombustible material. Direct installation on combustible material or near combustible materials could lead to fires.

Shut off the power on the servo amplifier side if a fault occurs in the servo amplifier. Fires could be caused if a large current continues to flow.

Shut off the power with an error signal when using the regenerative resistor. The regenerative resistor could abnormally overheat and cause a fire due to a fault in the regenerative transistor, etc.

⚠ CAUTION

2. Injury prevention

Do not apply a voltage other than that specified in Instruction Manual on each terminal. Failure to observe this item could lead to ruptures or damage, etc.

Do not mistake the terminal connections. Failure to observe this item could lead to ruptures or damage, etc.

Do not mistake the polarity (⊕, ⊖). Failure to observe this item could lead to ruptures or damage, etc.

Do not touch or place parts (cables, etc.) near the servomotor, etc., while the power is turned ON or immediately after turning the power OFF. These parts may reach high temperatures, and can cause burns or part damage.

3. Various precautions

Observe the following precautions. Incorrect handling of the unit could lead to faults, injuries and electric shocks, etc.

(1) Transportation and installation

Correctly transport the product according to its weight.

Use the servomotor's suspension bolts only when transporting the servomotor. Do not transport the servomotor when it is installed on the machine.

Do not stack the products above the tolerable number.

Do not hold the cables, axis or detector when transporting the servomotor.

Do not hold the connected wires or cables when transporting the servomotor.

Do not hold the front cover when transporting the servo amplifier. The unit could drop.

Follow this Instruction Manual and install the unit in a place where the weight can be borne.

Do not get on top of or place heavy objects on the unit.

Always observe the installation directions.

Secure the specified distance between the servo amplifier and control panel, or between the servo amplifier and other devices.

Do not install or run a servo amplifier or servomotor that is damaged or missing parts.

Do not block the intake or exhaust ports of the servomotor provided with a cooling fan.

Do not let foreign objects enter the servo amplifier or servomotor. In particular, if conductive objects such as screws or metal chips, etc., or combustible materials such as oil enter, rupture or breakage could occur.

The servo amplifier and servomotor are precision devices, so do not drop them or apply strong impacts to them.

⚠ CAUTION

⚠ Store and use the units under the following environment conditions.

Environment	Conditions	
	Servo amplifier	Servomotor
Ambient temperature	0°C to +55°C (with no freezing)	0°C to +40°C (with no freezing)
Ambient humidity	To follow separate specifications	80%RH or less (with no dew condensation)
Storage temperature	To follow separate specifications	–15°C to +70°C
Storage humidity	To follow separate specifications	90% RH or less (with no dew condensation)
Atmosphere	Indoors (Where unit is not subject to direct sunlight) With no corrosive gas, combustible gas, oil mist or dust	
Altitude	1000m or less above sea level	
Vibration	To follow separate specifications	

⚠ Securely fix the servomotor to the machine. Insufficient fixing could lead to the servomotor slipping off during operation.

⚠ Always install the servomotor with reduction gears in the designated direction. Failure to do so could lead to oil leaks.

⚠ Never touch the rotary sections of the servomotor during operations. Install a cover, etc., on the shaft.

⚠ When coupling to a servomotor shaft end, do not apply an impact by hammering, etc. The detector could be damaged.

⚠ Do not apply a load exceeding the tolerable load onto the servomotor shaft. The shaft could break.

❗ When storing for a long time, please contact the Service Center or Service Station.

⚠ CAUTION

(2) Wiring

⚠ Correctly and securely perform the wiring. Failure to do so could lead to runaway of the servomotor.

⚠ Do not install a condensing capacitor, surge absorber or radio noise filter on the output side of the servo amplifier.

⚠ Correctly connect the output side (terminals U, V, W). Failure to do so could lead to abnormal operation of the servomotor.

⚠ Do not directly connect a commercial power supply to the servomotor. Doing so could lead to faults.

⚠ When using an inductive load such as a relay, always connect a diode as a noise measure parallel to that load.

⚠ When using a capacitance load such as a lamp, always connect a protective resistor as a noise measure serial to that load.

⚠ When connecting a DC relay for the control output signals, do not mistake the polarity of the diode. Failure to observe this could cause the signals not to be output due to a fault or the protective circuit to fail.

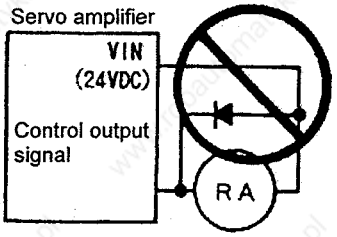

⚠ Do not connect/disconnect the cables connected between the units while the power is ON.

⚠ Securely tighten the cable connector fixing screw or fixing mechanism. An insecure fixing could cause the cable to fall off while the power is ON.

⚠ When use of a shielded cable is instructed in the connection diagrams, always ground the cable with a cable clamp, etc.

⚠ Always separate the signals wires from the drive wire and power line.

⚠ Use wires and cables that have a wire diameter, heat resistance and flexibility that conforms to the system.

(3) Trial operation and adjustment

⚠ Check and adjust each program and parameter before starting operation. Failure to do so could lead to unforeseen operation of the machine.

⚠ Do not make remarkable adjustments and changes as the operation could become unstable.

⚠ CAUTION

(4) Usage methods

Install an external emergency stop circuit so that the operation can be stopped and power shut off immediately.

Turn the power OFF immediately if smoke, abnormal noise or odors are generated from the spindle motor or spindle amplifier.

Unqualified persons must not disassemble or repair the unit.

Never make modifications.

Reduce magnetic damage by installing a noise filter. The electronic devices used near the servo amplifier could be affected by magnetic noise.

Use the spindle motor, spindle amplifier and regenerative resistor with the designated combination. Failure to do so could lead to fires or trouble.

The brakes (magnetic brakes) assembled into the servomotor are for holding, and must not be used for normal braking.

There may be cases when holding is not possible due to the magnetic brake's life or the machine construction (when ball screw and servomotor are coupled via a timing belt, etc.). Install a stop device to ensure safety on the machine side.

After changing the parameters or after maintenance and inspection, always test the operation before starting actual operation.

Do not enter the movable range of the machine during automatic operation. Never place body parts near or touch the spindle during rotation.

Follow the power supply specification conditions given in the separate specifications manual for the power (input voltage, input frequency, tolerable power failure time, etc.).

(5) Troubleshooting

If a hazardous situation is predicted during power failure or product trouble, use a servomotor with magnetic brakes or install an external brake mechanism.

Use a double circuit configuration that allows the operation circuit for the magnetic brakes to be operated even by the external emergency stop signal.

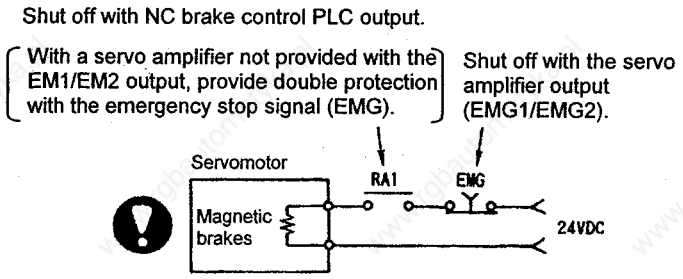

Always turn the input power OFF when an alarm occurs.

Never go near the machine after restoring the power after a failure, as the machine could start suddenly. (Design the machine so that personal safety can be ensured even if the machine starts suddenly.)

⚠ CAUTION

(6) Maintenance, inspection and part replacement

⚠ Always backup the servo amplifier programs and parameters before starting maintenance or inspections.

⚠ The capacity of the electrolytic capacitor will drop due to deterioration. To prevent secondary damage due to failures, replacing this part every five years when used under a normal environment is recommended. Contact the Service Center or Service Station for replacemet.

⚠ Do not perform a megger test (insulation resistance measurement) during inspections.

❗ If the battery low warning is issued, save the machining programs, tool data and parameters with an input/output unit, and then replace the battery.

⚠ Do not short circuit, charge, overheat, incinerate or disassemble the battery.

(7) Disposal

⚠ Treat this unit as general industrial waste.
If the heat radiating fins are protruding from the rear of the MDS Series, substitute Freon is used. Do not dispose of this type of unit as general industrial waste. Always contact the Service Station or Service Center for disposal.

⚠ Do not disassemble the spindle motor or spindle amplifier.

⚠ Dispose of the battery according to local laws.

(8) General precautions

The drawings given in this Specifications and Maintenance Instruction Manual show the covers and safety partitions, etc., removed to provide a clearer explanation. Always return the covers or partitions to their respective places before starting operation, and always follow the instructions given in this manual.

CONTENTS

Chapter I MDS-A/B Series Servo/Spindle System Configuration

1. Outline I-1
2. Drive Section System Configuration I-4
   (1) Basic system configuration I-5
   (2) List of units I-6
   (3) List of unit dimensions I-7
3. Unit Installation I-8
4. Connection of Each Unit I-10
   4.1 Layout of each unit I-11
   4.2 Link bar specifications I-11
   4.3 Unit separated layout I-13
   4.4 Precautions for installing multiple power supply units I-14
   4.5 Precautions for installing only one power supply unit for the 2CH communication specifications with the NC I-16
   4.6 Connection of battery unit I-17
5. Drive Section Connector and Cable Specifications I-18
   5.1 Half pitch cable connection system I-18
   5.2 Cable details I-20
      5.2.1 Communication cable SH21 (semi ordered product) I-20
      5.2.2 Terminator A-TM (ordered part) I-20
      5.2.3 Servo drive unit detector cable I-21
         (1) HA053/13 motor built-in detector cable I-21
         (2) Cables for OHE25K-□, OHA25K-□, OSE104□, OSA104□, OSE105□ and OSA105□ detectors I-22
      5.2.4 Brake cable I-23
      5.2.5 Communication cable SH21 connector I-24
         (a) 10320-3210-000 ..... I-24
         (b) 10320-52F0-008 ..... I-24
      5.2.6 Cannon plug for servomotor detector I-25
         1. Standard plug I-25
         2. JIS corresponding plugs (Hirose) I-27
      5.2.7 Cable materials I-29
      5.2.8 Cable protection tube (Measures against noise) I-30
      5.2.9 Oil proof type AC servomotor cable connectors (Recommendation 1) I-31
      5.2.10 Oil proof type servomotor cable connectors (Recommendation 2) I-32
      5.2.11 Cable clamp I-33
      5.2.12 Spindle control circuit cable list I-34
         (1) CNP5 cable I-37
         (2) CNP6M cable I-38
         (3) CNP6A cable I-39
         (4) CNP7A cable I-40
         (5) CNP7B cable I-41
         (6) CNP7H cable I-42
         (7) CNP67A cable I-43
         (8) CNP71A cable I-44
         (9) CNP71B cable I-45
         (10) CNP71H cable I-46
         (11) CNP5H cable I-47
         (12) CNP8 cable I-48
      5.2.13 Cable assembly procedure I-49

6. Outline Drawing I-53
6.1 Outline list I-53
6.2 Power supply unit I-54
6.3 1-axis servo drive unit I-55
6.4 2-axis servo drive unit I-56
6.5 Spindle drive unit I-56
6.6 Battery unit I-57
6.7 AC reactor I-58
6.8 Dynamic brake unit I-59
6.9 Contactor I-59
6.10 NFB I-59
7. Heating Value I-60
8. Selection of Capacity I-61
8.1 Selection of power supply unit I-61
8.2 Selection of power supply capacity I-63
8.3 Selection of wire size I-64
8.4 Selection of AC reactor, contactor and NFB I-69

Chapter II MDS-A-CV, MDS-B-CV Power Regeneration Type/Power Supply Section
MDS-A-CR Resistance Regeneration Type/Power Supply Section A

1. Power Regeneration Type Power Supply
1.1 Outline II-1
1.2 Model configuration II-1
1.3 List of specifications II-2
1.4 Hardware setting II-3
1.5 Status display II-4
1.5.1 7-segment LED display II-4
1.5.2 Charge lamp II-4
1.6 List of alarms and warnings II-5
(1) Alarms II-5
(2) Warning II-6
1.7 Explanation of connectors and terminal block II-7
1.8 Functions added with MDS-B Series
(Power supply external emergency stop function) II-8
1.9 Main circuit connection II-10
2. Resistance Regeneration Type Power Supply II-12
2.1 Outline II-12
2.2 Mode configuration II-12
2.3 List of specifications II-13
2.4 Capacity selection II-13
2.4.1 Regenerative resistor unit capacity selection II-13
2.5 Hardware and parameter settings II-15
2.6 Status display II-17
2.7 List of alarms and warnings II-18
2.8 Resistance regeneration converter unit outline drawing II-19
2.9 Connection of each unit II-20
2.10 Resistance regeneration converter wiring diagram II-21
2.11 Regenerative resistor unit outline drawing II-24

Chapter III MDS-A-Vx, MDS-B-Vx Servo System Section

1. Outline III-1
2. Motor III-2
2.1 Outline III-2
2.2 Model configuration III-3
2.3 Main equipment list III-4
2.4 Specifications list III-5
2.5 Outline dimension drawing III-7
2.6 Data sheet III-20
(1) Characteristics list III-20
(2) Torque-speed characteristic III-24
(3) Duty drive characteristic III-29
2.7 Motor connection III-30
(1) Cannon plugs to be used III-30
(2) Terminal box type motors III-32
(3) Cables to be used III-34
2.8 Motors with electromagnetic brake III-35
(1) Outline of motors with electromagnetic brake III-35
(2) Characteristics of electromagnetic brakes III-36
(3) Using electromagnetic brake III-37
(a) Brake excitation power III-37
(b) Safety considerations III-38
(c) Precautions for sequence III-39
2.9 Motor vibration resistance III-40
2.10 Motor shaft strength III-41
3. Detectors III-43
3.1 List of model names III-43
3.2 Specification III-44
3.3 Machine end detector outline drawing III-45
3.4 Serial pulse encoder III-47
3.4.1 Features III-47
3.4.2 Types III-47
3.4.3 Outline drawing III-48
3.4.4 Cable connection diagram III-49
3.4.5 Compatibility III-51
3.4.6 Maintenance III-53
4. Servomotor and Detector Installation III-54
4.1 Installation III-54
4.2 Coupling with the load III-58
(1) Direct coupling III-58
(2) Gear coupling III-59
(3) Span ring III-59
(4) Taper gauge III-60
(5) Other reference items III-60
5. MDS-A/B-V1 Servo Drive III-61
5.1 Model configuration III-61
5.2 Servo drive specifications III-62
5.3 Connection of dynamic brake unit III-62
5.4 Hardware setting III-64
5.5 Parameter settings III-65
(1) Parameter screens III-65
(2) Explanation of parameters III-66

(3) Parameter details III-72
(4) Supplement explanation III-77
(a) Lost motion and overshooting compensation + and – directions III-77
(b) Limits regarding PC1 and PC2 ..... III-77
(c) Current limits III-78
(5) Standard parameters per motor III-79
1. 2000rpm motor III-79
2. 3000rpm motor III-80
3. Low inertia motor III-81
(6) Parameters per servo system III-82
5.6 Alarm and warnings III-83
5.7 Explanation of connector and terminal block III-87
5.8 Main circuit and brake connection III-88
5.8.1 Main circuit III-88
5.8.2 Brake III-90
5.9 Wiring system diagrams for systems III-91
(1) Servo system configuration table III-92
(2) Cable system drawings for each specification III-93
5.10 D/A output function III-95
5.10.1 Outline III-95
5.10.2 Hardware specifications III-95
5.10.3 Parameters III-96
5.10.4 Output data No. III-96
5.10.5 Setting of output magnification III-97
5.10.6 Others III-97
6. MDS-A/B-V2 Servo Drive III-98
6.1 Model configuration III-98
6.2 Servo drive unit specifications III-99
6.3 Hardware setting III-102
6.4 Status display III-103
6.5 Explanation of terminal block and connectors III-105
6.6 Main circuit connection III-106
7. Selection of Capacity III-108
7.1 Selection of servo system III-108
7.1.1 Types of drive systems III-108
7.1.2 Selection of servomotor III-109
7.2 Determining the coasting amount with emergency stop III-120

Chapter IV MDS-A-SP, MDS-B-SP Spindle System Section
MDS-A-CSP Large Capacity Spindle Drive Section

1. Outline IV-1
1.1 Features of the MDS-A-SP and MDS-B-SP spindle system IV-1
1.2 Precautions for use IV-1
1.3 Model configuration IV-2
1.4 Configuration IV-3
1.4.1 Basic configuration (no added functions) IV-3
1.4.2 With orientation function IV-3
1.4.3 High-speed synchronous tap/spindle synchronization/with orientation function IV-5
1.4.4 OSE90K + 1024 encoder C-axis control/with orientation function IV-6
1.4.5 OSE90K + 1024 encoder C-axis control and high-speed synchronous tap/spindle synchronization/with orientation function IV-7

1.4.6 MBE90K encoder C-axis control/with orientation function IV-8
1.4.7 MBE90K encoder C-axis control and high-speed synchronous tap/ spindle synchronization/with orientation function IV-8
1.4.8 MHE90K encoder C-axis control/with orientation function IV-9
1.4.9 MHE90K encoder C-axis control and high-speed synchronous tap/ spindle synchronization/with orientation function IV-9
1.5 Device-to-device connections IV-10
2. Specifications IV-11
2.1 AC spindle motor and controller specifications IV-11
2.2 Output characteristics IV-15
2.3 Outline Dimension drawings IV-17
2.3.1 Motor IV-17
3. Functions IV-24
3.1 Control input signals IV-24
3.2 Control output signals IV-27
3.3 Meter outputs IV-30
3.4 Output interface IV-32
4. Status Display and Parameter Settings IV-33
4.1 Status display with 7-segment LED IV-33
4.2 Spindle parameters IV-34
4.3 Spindle specification parameters screen IV-52
4.4 Spindle monitor screen IV-53
4.5 Alarm and warning table IV-57
5. Optional Specifications and Parts IV-58
5.1 Orientation specifications (optional) IV-58
5.1.1 1-point orientation using magnesensor IV-58
5.1.2 4096-point orientation using encoder IV-66
5.1.3 4096-point orientation using motor built-in encoder IV-69
5.1.4 Operation of orientation IV-69
5.2 Synchronous tap function (option) IV-72
5.2.1 Closed type synchronous tap IV-72
5.2.2 Semi-closed type synchronous tap IV-72
5.2.3 Operation of synchronous tap IV-72
5.3 C-axis control (optional) IV-73
5.3.1 When using encoder (OSE90K + 1024 BKO-NC6336H01) IV-73
5.3.2 When using built-in encoder (MBE90K) IV-76
5.3.3 When using built-in encoder (MHE90K) IV-76
5.4 Single parts (optionally supplied parts) IV-77
5.4.1 Power step-down transformer IV-77
5.4.2 Noise filter IV-79
5.5 Other optional specifications IV-81
5.6 Theoretical acceleration and deceleration times IV-82
6. Large Capacity Spindle Drive IV-83
6.1 Outline dimensions IV-83
6.2 Connection of each unit IV-85
6.3 Drive section connector and cable specifications IV-86
6.4 Electrical specifications IV-87
Appendix 1. EN Standards Step-down Insulation Transformer ..... A I-1
Appendix 2. EMC Installation Guidelines ..... A II-1
Appendix 3. Unit Systems ..... A III-1
Supplement S-1

I. MDS-A/B Series
Servo/Spindle System Configuration

1. Outline

MDS-B Series servo and spindle system outline

The MDS-A Series is a drive system that corresponds to the MELDAS M500 Series NC that has been developed to totally connected the servo drive and spindle drive sections. The MDS-B Series is the successor to the MDS-A Series, and has been developed to satisfy European Safety Standards. This Series has the following features.

(1) Compact and lightweight

The converters that were conventionally built in each servo and spindle drive have been integrated into one unit. The drive system volume, installation area and weight have been drastically reduced with the incorporation of high density mounted electronic parts IGBT-IPM (Intelligent Power Module) and the high performance heat radiating fin.

(2) Standardization of dimensions

The outline has been standardized to the book end type, and by unifying the height and depth dimensions, installation in cabinets has been made easy. Furthermore, by matching the shape with the NC unit, an integrated appearance with the NC has been realized.

(3) Low heat generation

By incorporating the IPM and using power supply regeneration in the servo drive, the amount of heat generated has been greatly reduced.

(4) High speed and precision processing

A high speed CPU has been mounted on the control PCB, and a 100,000 pulse/rotation sub micron detector has been incorporated as a standard to allow faster and more precise interpolation.
By incorporating the stable position loop control (SHG control) method, having an outstanding response, the positioning time and tracking have been improved and the machine vibration during acceleration/deceleration has been reduced.
The cutting performance and cutting precision during position control have been improved by using the high speed CPU also for the spindle drive.

(5) High speed spindle orientation

Smooth operations and minimum orientation times have been realized by using the high speed orientation method while allows direct orientation from the high speed during the spindle drive.

(6) Features of the MDS-B Series

(a) European Safety Standards compliant
This Series complies with the European Safety Standards (LVD). Refer to the section "Compliance to European EC Directives" for details.

(7) Addition of power supply emergency stop input line

With the B Series, the external contactor can be directly shut off from the power supply even when the emergency stop hot line from the NC does not function for any reason.
(This function is validated with the rotary switch and connected drive parameter settings. Thus, the functions doe not change from the conventional functions when used in the same manner as the A Series.)

Compliance to European EC Directives

1. European EC Directives

The European EC Directives were issued to unify Standards within the EU Community and to smooth the distribution of products of which the safety is guaranteed. In the EU Community, the attachment of a CE mark (CE marking) to the product being sold is mandatory to indicate that the basic safety conditions of the Machine Directives (issued Jan. 1995), EMC Directives (issued Jan. 1996) and the Low-voltage Directives (issued Jan. 1997) are satisfied. The machines and devices in which the servo and spindle drive are assembled are a target for CE marking.
The servo and spindle drive are components designed not to function as a single unit but to be used with a combination of machines and devices. Thus, these are not subject to the EMC Directives, and instead the machines and devices in which the servo is assembled are targeted.
The MDS-B Series complies with the Standards related to the Low-voltage Directives in order to make CE marking of the assembled machines and devices easier. The EMC INSTALLATION GUIDELINES (BNP-B8582-45) which explain the servo amplifier installation method and control panel manufacturing method, etc., has been prepared to make compliance to the EMC Directives easier. Contact Mitsubishi or your dealer for more information. (Refer to Appendix 2.)

2. Cautions for EC Directive compliance

Use the Low Voltage Directive compliance part for the servo/spindle drive and servo/spindle motor. In addition to the items described in this instruction manual, observe the items described below.

(1) Configuration

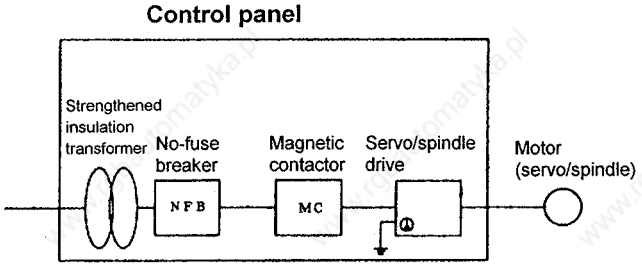

(2) Environment

The servo/spindle drive must be used within an environment having a Pollution Class of 2 or more as stipulated in the IEC664. For this, install the servo amplifier in a control panel having a structure (IP54) into which water, oil, carbon and dust cannot enter.

(3) Power supply

① The servo/spindle drive must be used with the overvoltage category II conditions stipulated in IEC664. For this, prepare a reinforced insulated transformer that is IEC or EN Standards complying at the power input section.

(4) Earthing

① To prevent electric shocks, always connect the servo amplifier protective earth (PE) terminal (terminal with ⏚ mark) to the protective earth (PE) on the control panel. (Always carry this out even when using a leakage breaker.)
② When connecting the earthing wire to the protective earth (PE) terminal, do not tighten the wire terminals together. Always connect one wire to one terminal.

(5) Wiring

① Always use solderless terminals with insulation tubes so that the wires connected to the servo amplifier terminal block do not contact the neighboring terminals.

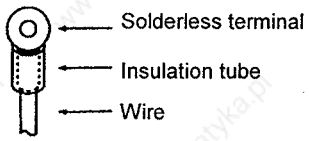

(6) Peripheral devices and options

① Use a no-fuse breaker and magnetic contactor that comply with the EN/IEC Standards.
② Select the wire size according to EN60204.

(7) Others

Refer to the EMC INSTALLATION GUIDELINES for other EMC Directive measures.

2. Drive Section System Configuration

⚠ WARNING

1. Wiring and inspection work must be done by a qualified technician.
2. Wait at least 10 minutes after turning the power OFF before starting wiring or inspections. Failure to observe this could lead to electric shocks.
3. Wire the servo amplifier and servomotor after installation. Failure to observe this could lead to electric shocks.
4. Do not damage, apply forcible stress, place heavy items or engage the cable. Failure to observe this could lead to electric shocks.

⚠ CAUTION

1. Correctly carry out the wiring. Failure to do so could lead to runaway of the servomotor, or to injuries.
2. Do not mistake the terminal connections. Failure to observe this item could lead to ruptures or damage, etc.
3. Do not mistake the polarity (⊕ , ⊖). Failure to observe this item could lead to ruptures or damage, etc.
4. When connecting a DC relay for the control output signals, do not mistake the polarity of the diode. Failure to observe this could cause the signals not to be output due to a fault or the protective circuit to fail.

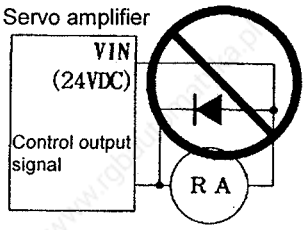

5. Magnetic noise may affect the electronic devices used near the control unit or servo amplifier. Keep the effect of magnetic obstacles to a minimum by installing a noise filter, etc. (Refer to Option Specifications Parts 5.4.2.)
6. Do not install a phase advancing capacitor, surge absorber or radio noise filter (option LF-□) on the power wire of the servomotor.
7. Shut off the power with the fault signal.
   Failure to do so could lead the regenerative resistor to abnormally overheat and to fires if the transistor fails, etc.
8. Do not make any modifications to the unit.
9. Some parts are the MDS-B Series instead of the MDS-A Series. The basic specifications do not differ, but if newly added functions or a newly added capacity is being used, always confirm the changed points before starting use.

⚠ CAUTION

Cautions for using MDS-B Series

1) The power supply unit MDS-B-CV-370 has a different rush sequence from the other supplies. Thus, always install an external contactor. Do not share the contactor with other power supplies.
2) The servo drive unit MDS-B-V1-110/150 does not have built-in dynamic brakes. Thus, always use an external dynamic brake unit.

(1) Basic system configuration (Example: Spindle + 3-axis servo)

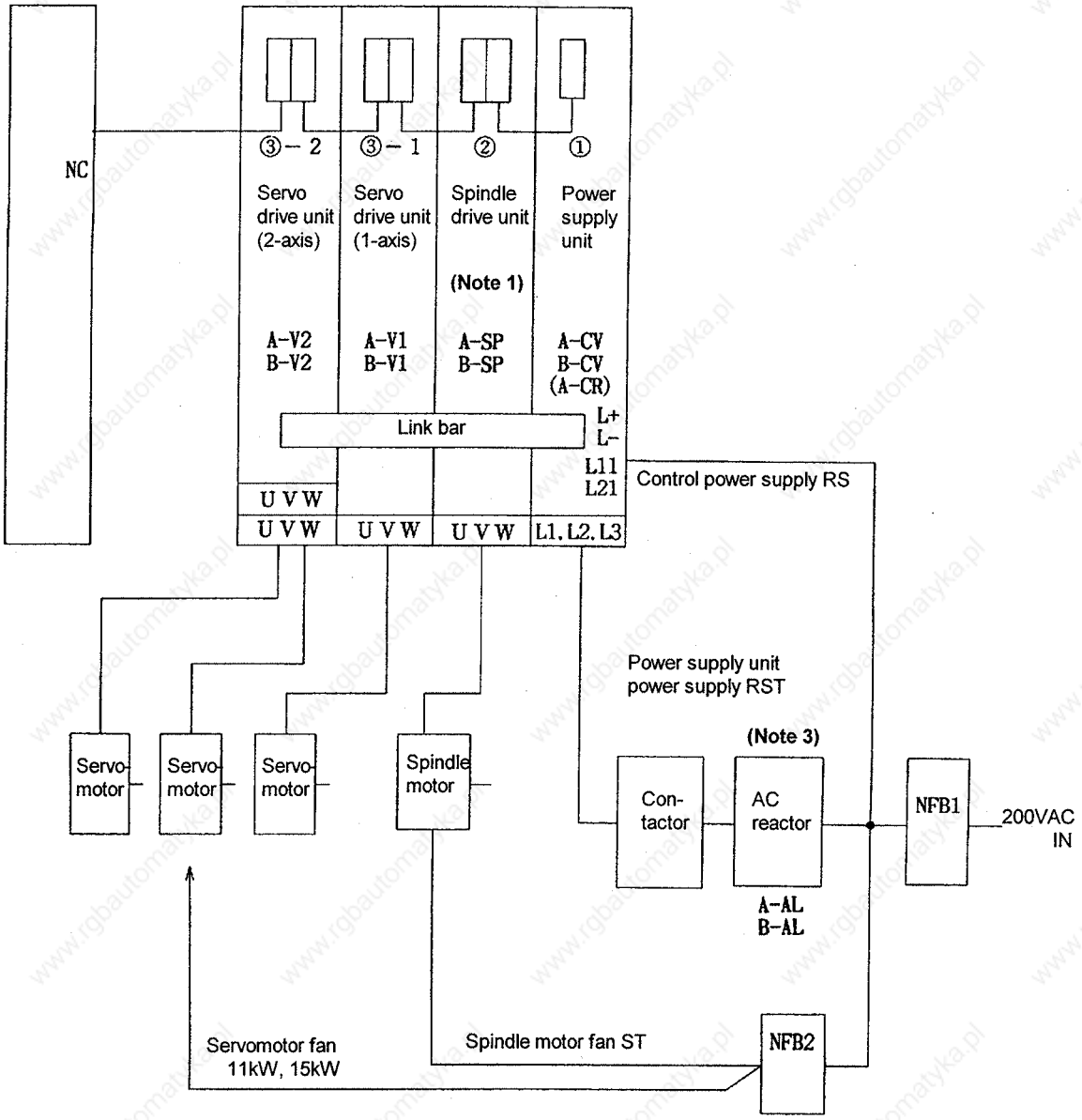

(Note 1) In systems which use a spindle drive unit, the spindle drive unit must be placed next to the power supply unit as shown above. Also install the 11kW and higher servo drive unit next to the power supply unit.
If also using spindle drive units, arrange the units next to the power supply in order of drive capacity size.

(Note 2) Excluding the MDS-B-CV-370, the use of a contactor can be selected.
Excluding the MDS-B-CV-370, use is possible without a contactor, but use of a contactor is recommended for safety purposes.
The rotary switch on the power supply unit must be set as follows according to whether the contactor is installed.

- Contactor installed ..... Rotary switch setting = 0
- Contactor not installed ..... Rotary switch setting = 1

With the A-CR, the rotary switch is fixed to 0. Always install a contactor.
Also install a contactor for the MDS-B-CV-370.

(Note 3) Always install the AC reactor. (The AC reactor is shipped from Mitsubishi.)
Note that this is not required for the A-CR. Wire the AC reactor to the front (NF) side of the contactor.

(2) List of units

① Power supply unit ..... DC power supply to drive unit/regenerative control

No.	Model	Capacity (kW)	Weight (kg)	Dimensions (H×W×Dmm) Type		Correspondence to drive unit capacity when single spindle is used (kW) 0.4	0.75	1.5	2.2	3.7	5.5	7.5	11	15	18.5	22	26	30	37	45	55
1	A-CV-37	3.7	5.0	380×60×300	A1	■	■	■	■	■											
2	A-CV-55	5.5	5.0	380×60×300							■										
3	A-CV-75	7.5	5.0	380×60×300								■									
4	A-CV-110	11.0	8.5	380×90×300	B1								■								
5	A-CV-150	15.0	10.5	380×120×300	C1									■							
6	A-CV-185	18.5	10.5	380×120×300											■						
7	A-CV-220	22.0	12.5	380×150×300	D1											■					
8	A-CV-260	26.0	12.5	380×150×300													■				
9	A-CV-300	30.0	12.5	380×150×300														■			
10	B-CV-370	37.0	12.5	380×150×300															■		
11	A-CR-10	1.0	2.0	380×60×180	A0	■	■														
12	A-CR-15	1.5	2.0	380×60×180				■													
13	A-CR-22	2.2	2.0	380×60×180					■												
14	A-CR-37	3.7	2.0	380×60×180						■											
15	A-CR-55	5.5	2.0	380×60×180							■										
16	A-CR-75	7.5	2.5	380×60×180								■									
17	A-CR-90	9.0	2.5	380×60×180																	

② Spindle drive unit ... Spindle motor control

No.	Model	Capacity (kW)	Weight (kg)	Dimensions(H×W×Dmm) Type		Power supply unit for single spindle	Remarks
1	A/B-SP-04	0.4	3.5	380 × 60 × 180	A0	A/B-CV-37	
2	A/B-SP-075	0.75	3.5	380 × 60 × 180		A/B-CV-37	
3	A/B-SP-15	1.5	3.5	380 × 60 × 180		A/B-CV-37	
4	A/B-SP-22	2.2	4.5	380 × 60 × 300	A1	A/B-CV-37	
5	A/B-SP-37	3.7	4.5	380 × 60 × 300		A/B-CV-37	
6	A/B-SP-55	5.5	6.5	380 × 90 × 300	B1	A/B-CV-55	
7	A/B-SP-75	7.5	6.5	380 × 90 × 300		A/B-CV-75	
8	A/B-SP-110	11.0	6.5	380 × 90 × 300		A/B-CV-110	
9	A/B-SP-150	15.0	8.5	380 ×120 × 300	C1	A/B-CV-150	
10	A/B-SP-185	18.5	8.5	380 × 120 × 300		A/B-CV-185	
11	A/B-SP-220	22.0	10.0	380 × 150 × 300	D1	A/B-CV-220	
12	A/B-SP-260	26.0	10.0	380 × 150 × 300		A/B-CV-260	
13	A/B-SP-300	30.0	10.0	380 × 150 × 300		A/B-CV-300	

* The combination of the power supply unit and spindle drive unit may differ from the above table.
The power supply unit capacity is determined by the motor output, and the spindle drive unit capacity is determined by the motor characteristics.

③ Servo drive unit ... Servomotor control

No. of axes	No.	Model	Capacity (kW)	Dimensions MDS-A	Dimensions MDS-B	Axis	Drive motor (HA**) 053	13	23	33	40	43	80	83	100	103	200	203	300	700	900	11K	15K
1-axis type	1	A/B-V1-01	0.1	A0	A0		■	■															
	2	A/B-V1-03	0.3						■	■													
	3	A/B-V1-05	0.5								■	■											
	4	A/B-V1-10	1.0	A1									■	■									
	5	A/B-V1-20	2.0		A1										■								
	6	A/B-V1-35	3.5													■	■						
	7	A/B-V1-45	4.5	B1	B1													■	■				
	8	A/B-V1-70	7.0	C1	C1															■			
	9	A/B-V1-90	9.0																		■		
	10	B-V1-110	11.0		D1																	■	
	11	B-V1-150	15.0																				■
2-axis type	1	A/B-V2-0101	0.1×2	A0	A0	L/M	■	■															
	2	A/B-V2-0301	0.3+0.1			L			■	■													
						M	■	■															
	3	A/B-V2-0303	0.3×2			L/M			■	■													
	4	A/B-V2-0501	0.5+0.1			L					■	■											
						M	■	■															
	5	A/B-V2-0503	0.5+0.3			L					■	■											
						M			■	■													
	6	A/B-V2-0505	0.5+0.1			L/M					■	■											
	7	A/B-V2-1005	1.0+0.5	A1		L							■	■									
						M					■	■											
	8	A/B-V2-1010	1.0×2			L/M							■	■									
	9	A/B-V2-2010	2.0+1.0		A1	L									■								
						M							■	■									
	10	A/B-V2-2020	2.0×2			L/M									■								
	11	A/B-V2-3510	3.5+1.0	B1	B1	L										■	■						
						M							■	■									
	12	A/B-V2-3520	3.5+2.0			L										■	■						
						M									■								
	13	A/B-V2-3535	3.5×2			L/M										■	■						
	14	B-V2-4520	4.5+2.0			L												■	■				
						M									■								
	15	B-V2-4535	4.5+3.5			L												■	■				
						M										■	■						

* Refer to Chapter III "Servo System Section 5.2 Servo drive specifications" for the combination of the low inertia motor and amplifier.

(3) List of unit dimensions

Outline type	A0/A1	B1	C1	D1
H×W×Dmm	A0: 380×60×180 A1: 380×60×300	380×90×300	380×120×300	380×150×300
Outline drawing (mm)	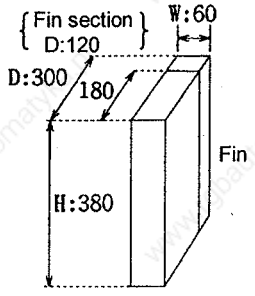 The A0 type has no fin (Depth: 180)	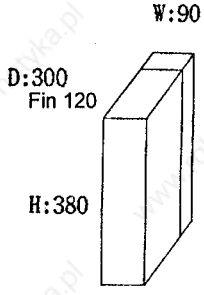	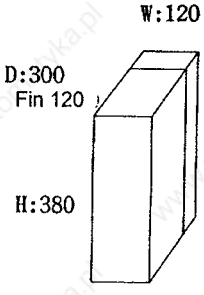	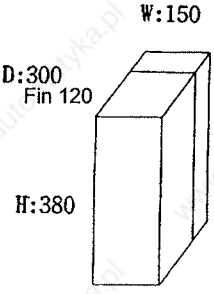

3. Unit Installation

⚠ CAUTION

1. Transport the product with the correct method according to the weight. Failure to do so could lead to injuries.
2. Do not stack products past the limit.
3. Install the unit on a non-combustible material. Direct installation on combustible material or near combustible material could lead to fires.
4. Install the unit according to the instruction manual in a place where the weight can be withstood.
5. Do not get on or place heavy objects on the product. Failure to do so could lead to injuries.
6. Use the unit within the designated environmental condition range.
7. Do not allow conductive matter such as screw or cutting chips or combustible matter such as oil enter the servo amplifier or servomotor.
8. Do not block the intake/outtake ports of the servo amplifier or servomotor. Failure to observe this could lead to faults.
9. The servo amplifier and servomotor are precision machines, so do not drop or apply strong impacts on them.
10. Do not install or operate servo amplifiers or servomotors that are damaged or that have missing parts.
11. When storing the unit for a long time, contact the Service Center or Service Station.

(1) Each unit is designed to be installed in a cabinet such as a power distribution box. Avoid installation in direct sunlight, near heat generating objects or outdoors.

(2) The inner working environment (temperature, humidity, vibration, atmosphere) of the cabinet must be within the limits given in the "Specifications for each unit". The cabinet for the cutting machine must be a totally closed type cabinet.

(3) Make considerations so that inspections and replacement during maintenance is easy.
The required space around each unit is shown in the outline dimensions drawing.

(4) Each unit generates some heat, so leave a space on the top and bottom when installing other equipment or parts.
Refer to the outline drawing for the square hole dimensions. In this case, insert packing between the unit and power distribution box. Refer to the following installation examples for the installation of the servo amplifier.

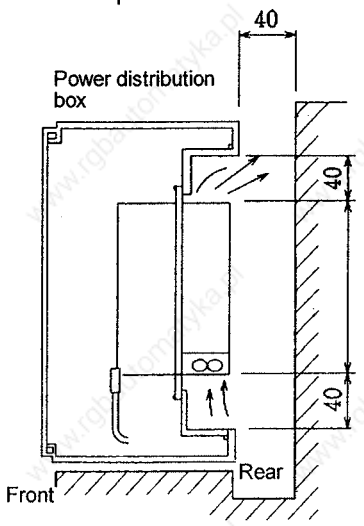

Example 1. Leave space for air flow when the power distribution box is at the rear of the machine.

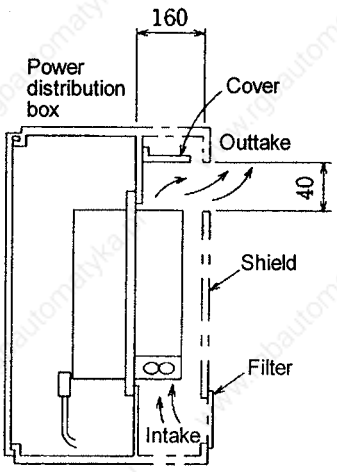

Example 2. When the outdoor air cooling section is to protrude from the power distribution box, make sure that cutting chips, etc., do not enter the outtake section.

⚠ CAUTION
1. Do not hold the front cover when transporting the servo amplifier. The amplifier could drop and lead to injuries. 2. Always observe the installation directions. Failure to do so could lead to faults. 3. Secure the specified distance between the servo amplifier and inner side of the control panel and the other devices. Failure to do so could lead to faults.

Note 1. When installing in a poor environment (factories with large quantities of oil mist), install a filter on the intake section shield shown with the dotted line.
Note 2. When assembling the control panel, make sure that drill cutting chips, etc., do not enter the amplifier.
Note 3. Make sure that oil, water and cutting chips do not enter the amplifier from the control panel clearances or fan on top panel.
Note 4. When using the unit is places having high levels of toxic gases or dust, protect the amplifier by air purging (preventing the entry of toxic gases and dust by feeding clean air from an external source, so that inner pressure of control panel is higher than the outer pressure).

(5) Installation of cooling fan

1) Each unit (excluding types without fins) are individually provided with cooling fans (FAN1 shown below). However, to continue operation when the fan stops due to deterioration of the fan's ambient environment, and in terms of maintenance improvement, the user should install the additional fan (FAN2 shown below.).

When using the totally closed type unit installation method and the box structure in which cutting oil and dust, etc., easily enters the unit's fan and fin section (a structure where the fan may stop easily due to the working environment), the user should install a fan at the position indicated as FAN2 below. Forced cooling should then be performed with a velocity of 2m/sec or higher. Also consider the maintainability in this case.

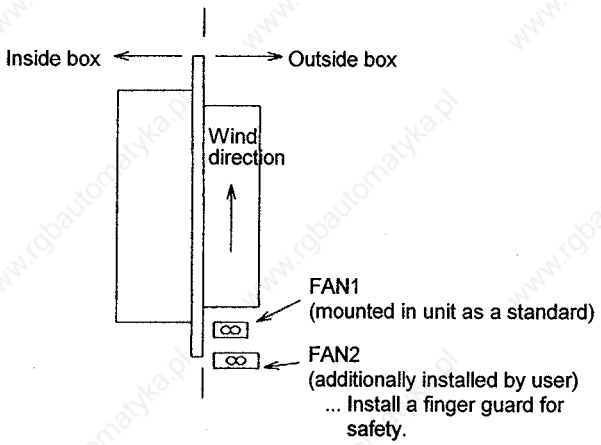

2) Due to the structure, heat will tend to accumulate that the top of each unit. Thus, install a fan in the distribution panel to mix the heat at the top of each unit.

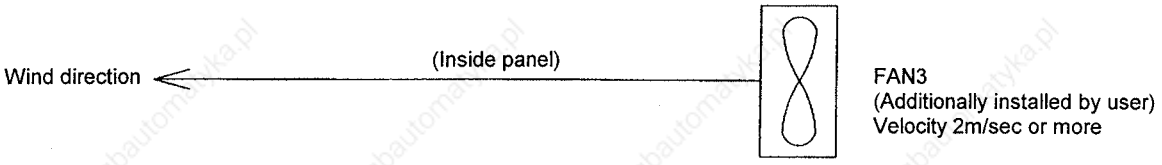

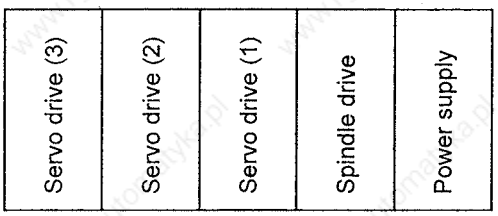

Front view of units in distribution panel

4. Connection of Each Unit

⚠ CAUTION

1. Shut off the power on the servo amplifier side if a fault occurs in the servo amplifier. Fires could be caused if a large current continues to flow.
2. Shut off the power with a fault signal. The regenerative resistor could abnormally overheat and cause a fire due to a fault in the regenerative transistor, etc.
3. Use a double circuit configuration that allows the operation circuit for the magnetic brakes to be operated even by the external emergency stop switch when the power is OFF • an alarm has occurred, or the servo ON signal is OFF.
4. Always install the MDS-B-CV-370 external contactor.
   Do not share the contactor with the other CV power supply units. Failure to observe this could lead to breakage.
5. The MDS-B-V1-110/150 does not have built-in dynamic brakes. Always use an external dynamic brake unit.

Wire the power supply and main circuit as shown below.
Always use a no-fuse breaker (NF) for the power supply input wire.

Standard connection

Drive section wiring system diagram

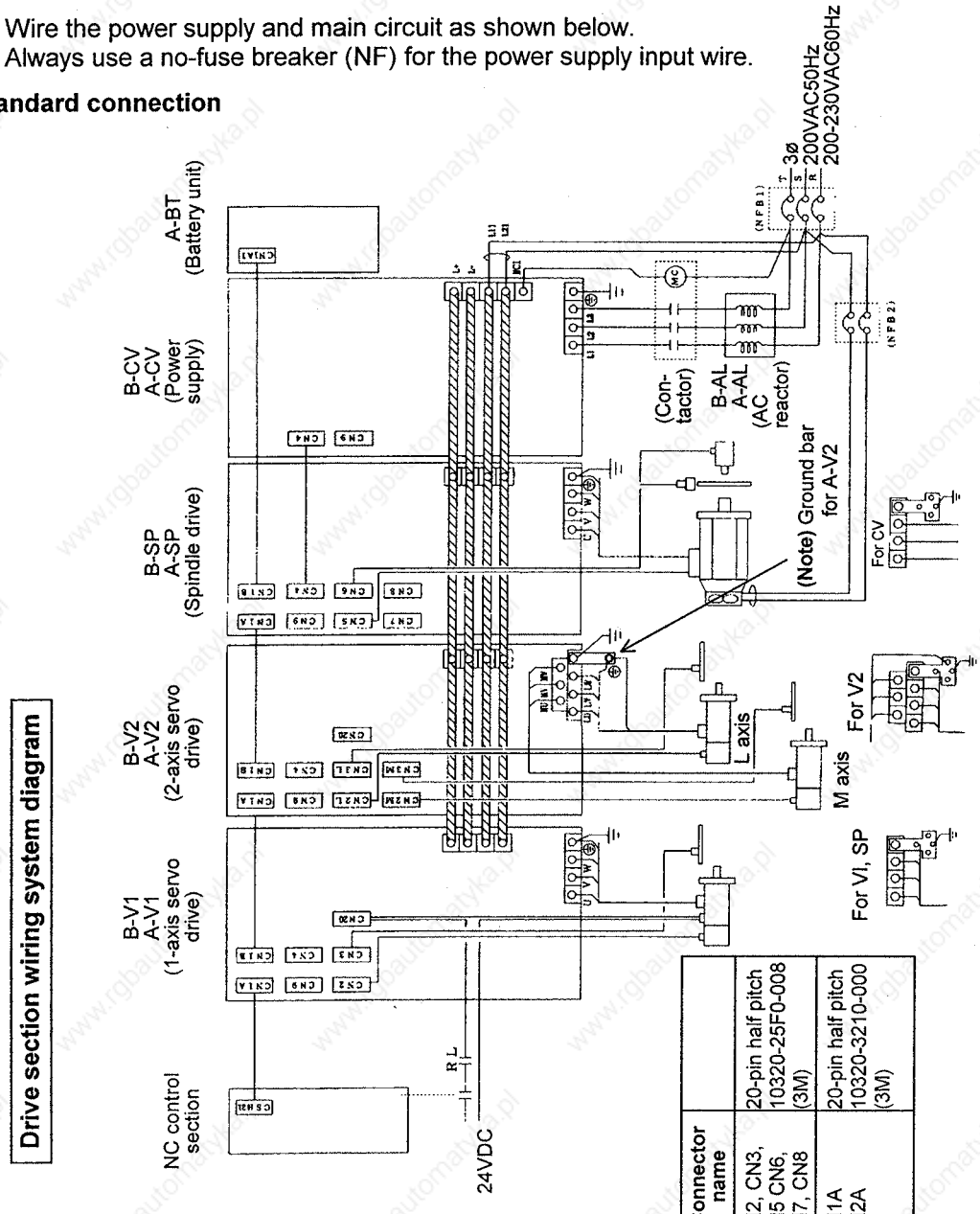

Connector name	
CN2, CN3, CN5 CN6, CN7, CN8	20-pin half pitch 10320-25F0-008 (3M)
CN1A CN2A	20-pin half pitch 10320-3210-000 (3M)

Note 3. Devices (contactor, magnetic brakes, relay) that generate high levels of noise are installed near the power supply and drive unit. If the unit may malfunction, install a surge killer on the noise generating device, so as to suppress the noise.

Note 2. Each unit is shipped with an earth bar, as of production starting April 1995. Wire as shown in the drawings so that the earth wire is not tightened commonly.

4.1 Layout of each unit

Layout the units according to the following reference as a principle.

(1) When total of spindle motor output and servomotor output is 38kW or less
Σ (Spindle motor output) +kΣ (servomotor output) ≤ 38kW

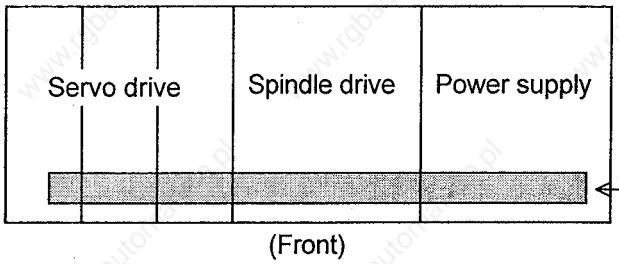

(K = 1 with 1-axis servo)
(K = 0.7 with 2 or more axes)
Refer to section
8. Selection of Capacity for details.

(2) When total of spindle motor output and servomotor output is larger than 31kW
Σ (Spindle motor output) +kΣ (servomotor output) > 38kW

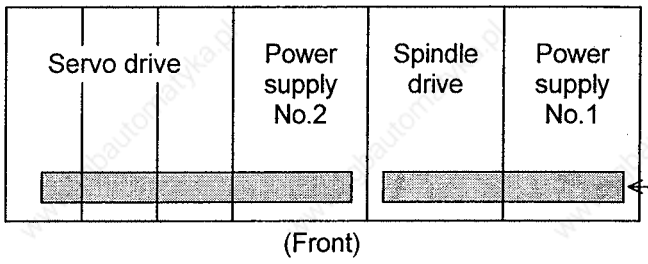

(K=1 with only 1-axis servo)
(K=0.7 with 2 or more axes)
Refer to section
8. Selection of Capacity for details.

⚠ CAUTION

Always connect the power supply No. 1 and No. 2 L+ and L– link bars independently.

(Note) The clearance between each unit should generally be 3cm or less.
If the spindle drive unit and servo drive unit must be separated by more than 3cm, observe the conditions listed in section 4.3.

4.2 Link bar specifications

The link bar is the following part, and must be manufactured by the user:

L+, L– —— A connection wire used to supply the converter's DC voltage from the power supply unit to each drive unit.

L11, L21 —— A connection wire used to supply the 200VAC control power to each unit.

This does not necessary need to be a bar (plate), but can be a wire.

Link bar specifications —— The terminal block for link bar connection is the following regardless of the capacity:

{ L+, L– ..... M6 screw
{ L11, L21 ..... M4 screw

An outline connection drawing is shown on the following page for reference.

(1) Outline connection drawing

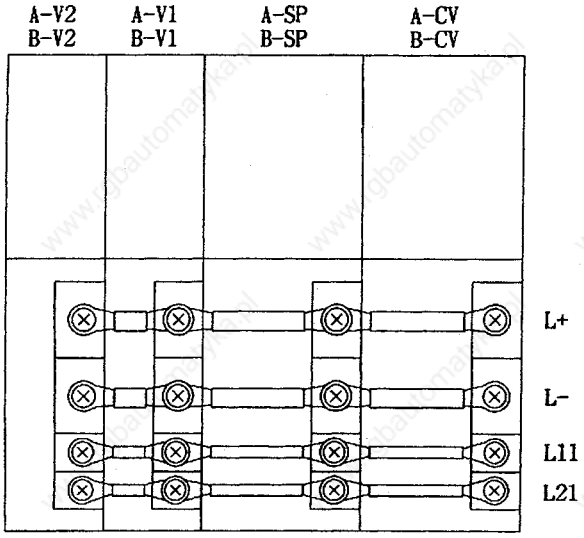

(Note) Mount the terminal cover after wiring as shown above. The terminal cover differs for each unit width. Refer to section 8.3 for selecting the wire size.

4.3 Unit separated layout

When installing vertically, avoid separating the spindle drive unit (A/B-SP) and power supply unit (A/B-CV) as shown in <Example 1> below. Do not separate the 11kw and higher servo drive units either.
When using both spindle drive units and 11kw and higher servo drive units, arrange them next to the power supply unit in the following order of priority.

V1-150 > V1-110 > SP-300 > SP-260 > SP-220 > SP-185 > SP-150 ·····

For example, when using a combination of SP-260 and V1-150, place the V1-150 next to the power supply unit, and the SP-260 next to that.
The 9kW and below servo drive unit can be installed vertically as shown in <Example 2>. Note that the relay link bar length must be 50cm or less, and two bars must be bundled.

<Example 1> NG

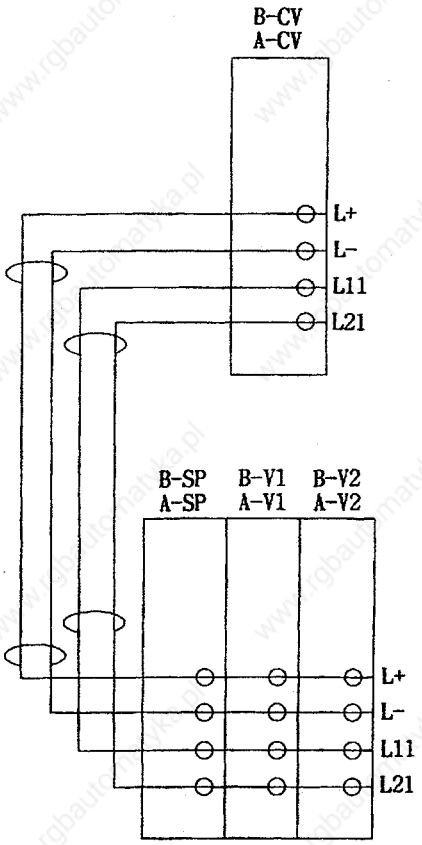

<Example 2> OK

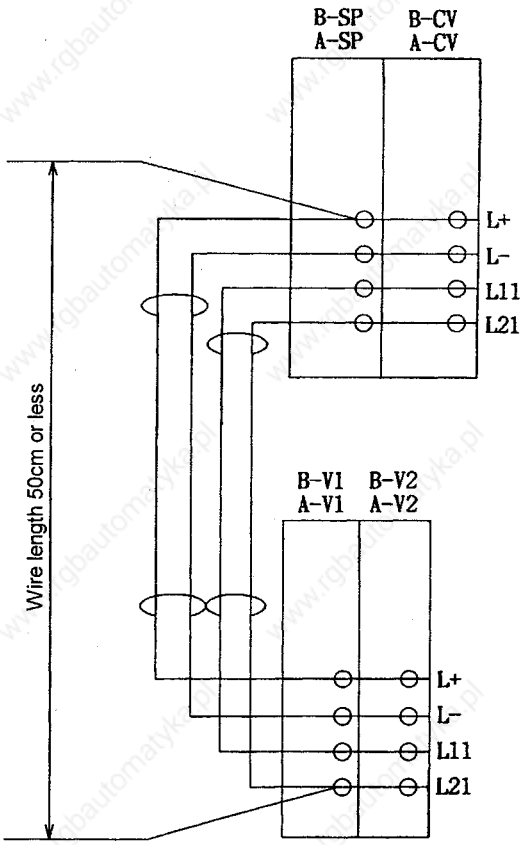

(Note) The above details also apply when separating the units to the left and right and installing.

4.4 Precautions for installing multiple power supply units (Refer to section 8.1 (Note 4))

(1) When not using a contactor

⚠ Always use this wiring when using the MDS-B-CV-370.

The rush circuit and contactor operation sequence of the MDS-B-CV-370 differs from the other power supply units (A/B-CV). Thus, always install an independent contactor. If the contactor is not used or if shared with other power supply units, damage will occur.
A system in which a power supply unit (A/B-CV (No. 1)) is installed for the spindle drive unit and one (A/B-CV (No. 2)) is installed for the servo drive unit is explained as a representative example of multiple power supply unit installation. The same connections are used for other multiple installation systems.

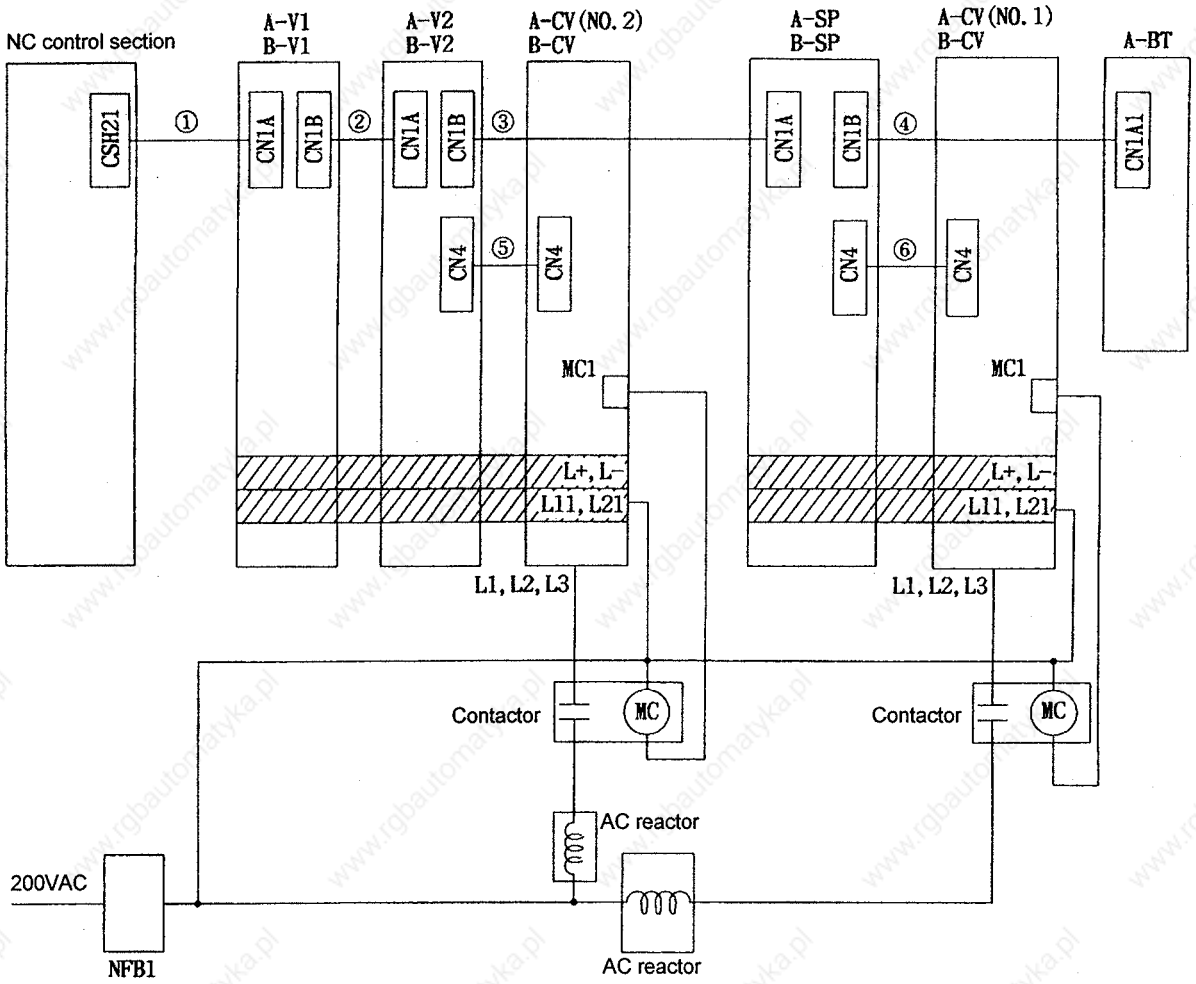

Fig. 1

1) Connection of NC communication cable
   <1> When battery unit (A-BT) is required (when absolute position detection specifications are used)
   Connect with the lines ① to ④ above.
   <2> When battery unit (A-BT) is not required (when absolute position detection specifications are not used).
   The ④ connection cable and battery unit will not be required so insert a terminator (A-TM) into the terminating axis CN1B (A/B-SP above).
2) Connection of communication cable between drive unit and power supply unit
   Connect the ⑥ cable to A/B-CV (No. 1) and the ⑤ cable to A/B-CV (No. 2) as shown above.

3) Connection of L+, L–, L11 and L21 link bars
As shown in Fig. 1, the link bar for A/B-CV (No. 1) and for A/B-CV (No. 2) are connected independently. Make sure than neither of the link bars are short circuited and connected.
4) Connection of AC reactor
Always use one AC reactor per power supply unit, and install the AC reactor for the A/B-CV (No. 1) and A/B-CV (No. 2) separately as shown in Fig. 1.
5) Connection of contactor
When using the MDS-B-CV-370, a contactor cannot be used, so install separately as shown in Fig. 1.

(2) To share contactors

In this section, the system in which the power supply unit (A/B-CV (No. 1)) for the spindle drive unit, and the power supply unit (A/B-CV (No. 2)) for the servo drive unit are installed as shown below is explained as a special example of using one contactor with multiple power supply units. The same connection is used for multiple systems. When sharing the contactor, set the power supply unit that does not control the contactor as "No contactor". At this time some alarms (ground fault, external contact welding) will be invalidated.

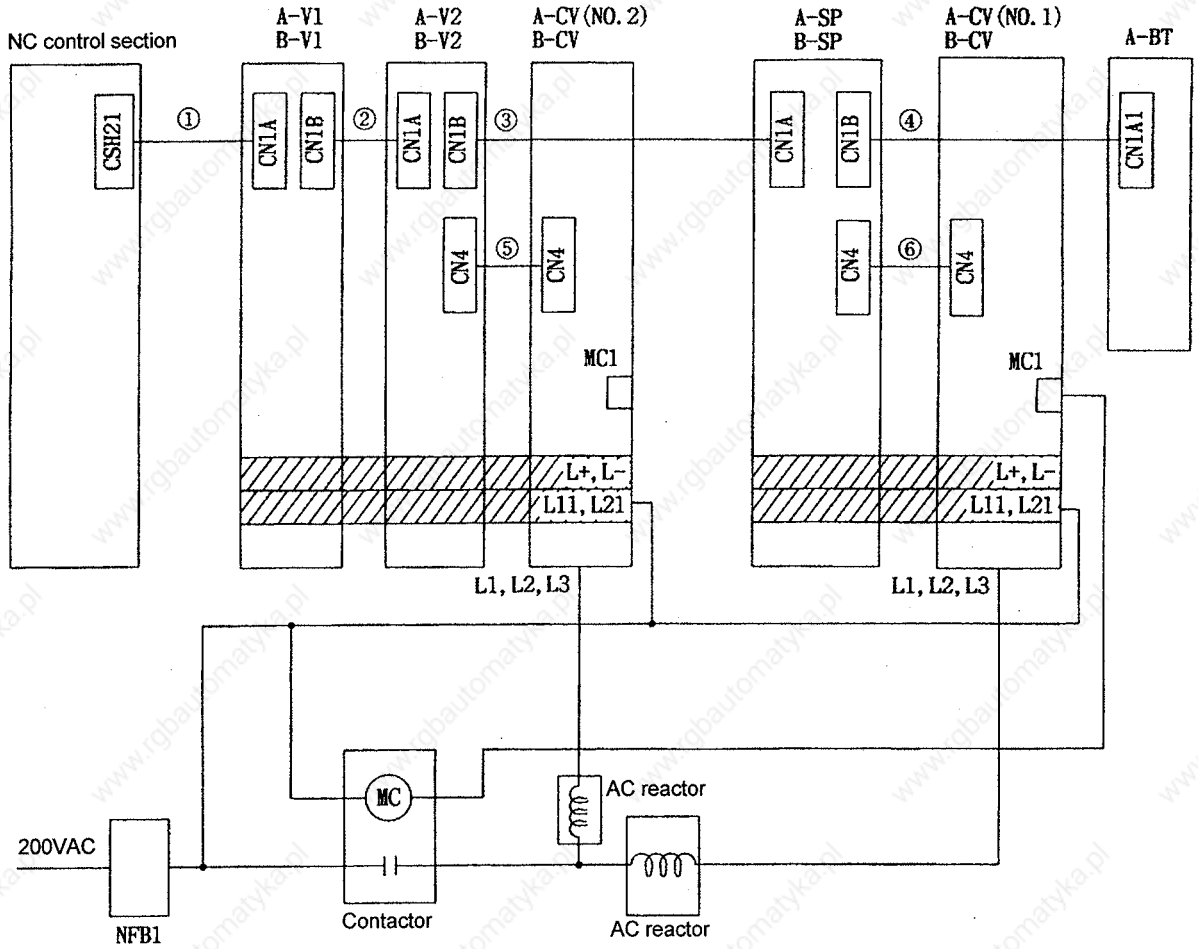

6) Connection and selection of NFB1, contactor and AC reactor
For the NFB and contactor, basically only one unit each needs to be installed for the A/B-CV (No. 1) and A/B-CV (No. 2) as shown in Fig. 1. However, each power supply should be provided with an AC reactor, so separately install the AC reactors for the A/B-CV (No. 1) and A/B-CV (No. 2) as shown in Fig. 1.
7) Connection of MC1 terminal (power supply unit)
If one batch connector is installed as shown in Fig. 1, the contactor coil exciting terminal (MC1) is connected only to the power supply unit (=A/B-CV (No.1)) connected to the terminating axis.

4.5 Precautions for installing only one power supply unit for the 2CH communication specifications with the NC (For 2-system control)

※ Note that this method cannot be used with the A-CR.

The following systems will be explained in this section. The other 2CH systems also use the same specifications.

- CH1 ..... A/B-V1 + A/B-V2
- CH2 ..... A/B-V2 + A/B-SP

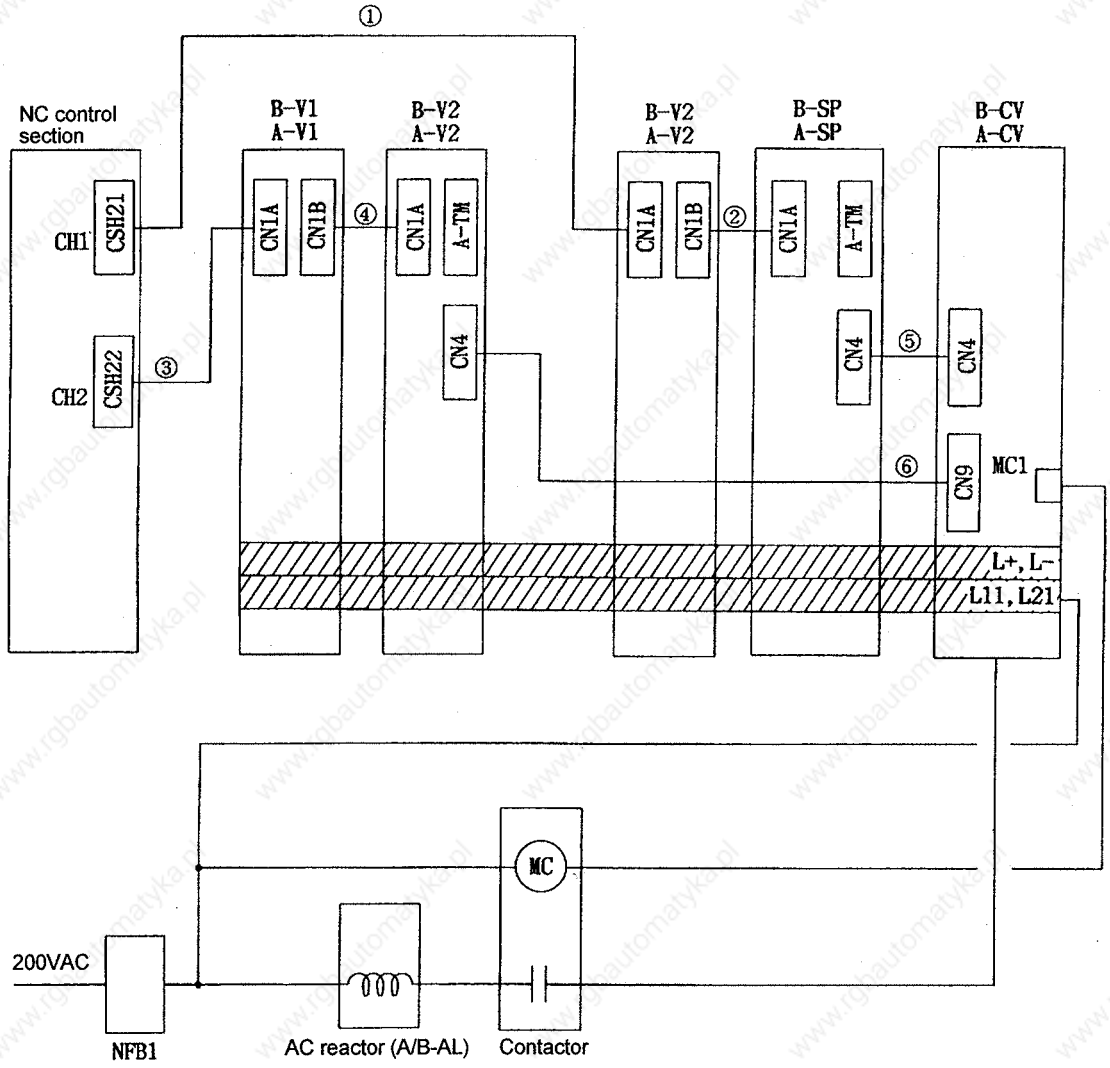

Fig. 2

1) Connection of NC communication cable
   <1> CH1
   Connect with the lines ① to ② shown in Fig. 2.
   <2> CH2
   Connect with the lines ③ to ④ shown in Fig. 2.
2) Connection of communication cable between drive unit and power supply unit
   <1> CH1
   Connect from the CH1 terminating axis (A/B-SP in Fig.2) with the line ⑤. The pin assignments for cable ⑤ are the same as the standard specifications. (Refer to section 5.2.1.)
   <2> CH2
   Connect from the CH2 terminating axis (A/B-V2 in Fig. 2) with the line ⑥ . The pin assignments for cable ⑥ are the same as the standard specifications.

4.6 Connection of battery unit

Unit configuration

① Without battery unit

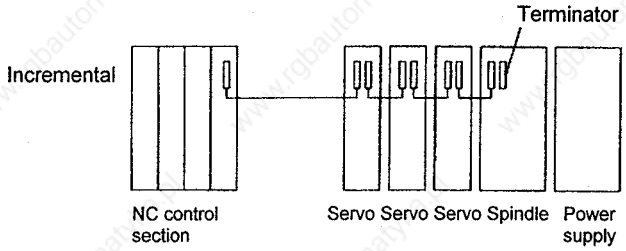

② With battery unit

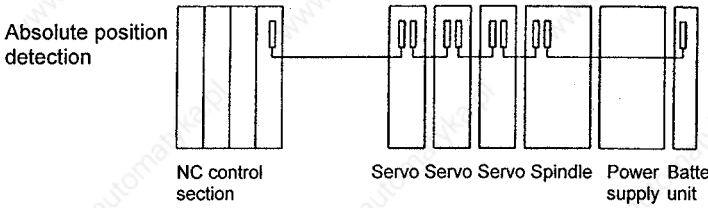

The terminator is not required for the absolute position detection.
(The connector is built in the battery unit.)

The battery unit model is as follows according to the battery capacity (quantity). Select so that the No. of axis for absolute position detector is less than the No. of batteries.

MDS-A-BT- 2
4
6
8
} No. of batteries (≥ No. of absolute value axes)

※ The battery does not differ for the MDS-B Series, so prepare the conventional MDS-A-BT-□ type.

5. Drive Section Connector and Cable Specifications

5.1 Half pitch cable connection system

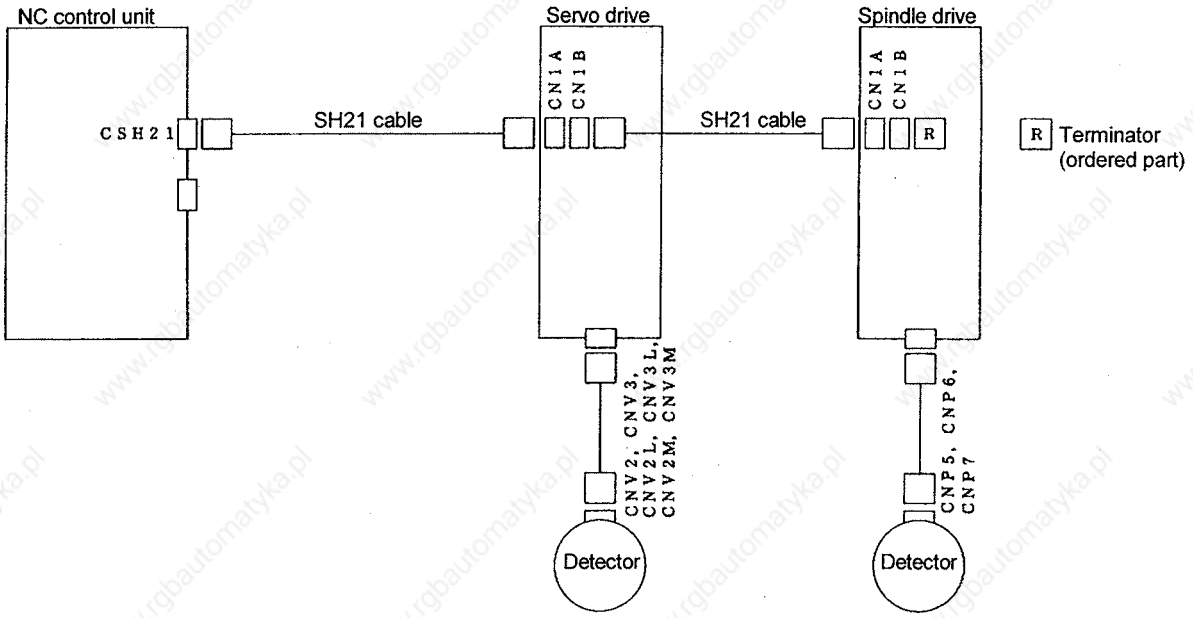

	Cable name	Connector name on controller side (Maker)	Recommended connector name on cable side (Maker)	Cable maker	Cable creation tool (Maker)
	SH21 cable	10220-52A2JL 20220-52A2JL	Shell (Crimp type) : 10320-3210-000(3M) Plug (Crimp type) : 10120-6000EL (3M)	UL2789 AWG28 (DDK) IOPVV-SB AWG28X10P (3M)	Press machine unit (with gauge block) : 3794-1000 Locator plate : 3795-1A Platen : 3795-2A Cutting unit : 3795-3A Fixture unit : 3796-1A Fixture unit : 3796-2A Fixture unit : 3796-5A Fixture block : 3796-3A Cable clamp : 3796-4
Servo drive	CNV2, CNV3, CNV2L, CNV3L, CNV2M, CNV3M Each cable	Same as above	(1)Controller side Plug (soldered-type) : 10120-3000VE (3M) Shell (soldered-type) : 10320-52F0-008 (3M) (2)Detector side ⟶ ① (Straight) 2-type Cannon connector : MS3106B22-14S (Japan Aviation Electronics) Connector clamp : MS3057-12A (Japan Aviation Electronics) ② (Right angle) 3-type Cannon connector : MS3108B22-14S (Japan Aviation Electronics) Connector clamp : MS3057-12A (Japan Aviation Electronics) ③ (Amplifier terminal) E-type Amplifier terminal : V1.25-4	TSI-91026 2PX0.3SQ+10PX0.2SQ (DDK) The HA053/13 motor built-in encoder uses a different cannon plug. (Refer to section 5.2.3 (1).)	———

Half pitch cable connection system (continued)

	Cable name	Connector name on controller side (Maker)	Recommended connector name on cable side (Maker)	Cable maker	Cable creation tool (Maker)
Spindle drive	CNP5	20220-52A2JL	(1)Controller side Plug (soldered-type) : 10120-3000VE (3M) Shell (soldered-type) : 10320-52F0-008 (3M) (2)Detector side Connector : AMP-350720-1 (Japan Amplifier) Pin : AMP-350689-1 (Japan Amplifier)	TP-91026 2PX0.3SQ+10PX0.2SQ (DDK)	——
	CNP6	Same as above	(1)Controller side Plug (soldered-type) : 10120-3000VE (3M) Shell (soldered-type) : 10320-52F0-008 (3M) (2)Detector side ① Magnesensor : TRC116-12A10-7F10.5 (Tajimi Musen) ② Encoder : MS3106A20-29S (Cannon)	Same as above	——
	CNP7	Same as above	(1)Controller side Plug (soldered-type): 10120-3000VE (3M) Shell (soldered-type): 10320-52F0-008 (3M) (2)Detector side MS3106A20-29S (Cannon)	Same as above	——

Cable name system

CN□□□□ – □□ – □ – □

Connector fixed type	None	: One-touch type lock
	S	: Screw type lock
Connector type	E	: E-type (crimp terminal on lead end)
	2	: 2-type (cannon plug straight type or designated connector)
	3	: 3-type (cannon plug L type)
Axis No. (Axis 1 to 9)	1~9	: Axis 1 ~ 9
System No.	None	: Axis 1 system
	2	: Axis 2 system
	↓	
	5	: Axis 5 system
	P	: PLC axis
Servo and spindle detector type	None	: Servo standard detector or spindle PLG
	S	: Servo small capacity detector (HA053/HA13)
	F	: Servo special motor (HA-FH053C-Y)
	A	: Spindle shaft type encoder
	B	: Spindle built-in type encoder
	M	: Spindle magnesensor
Connection connector	2	: CN2L or CN2M (servo drive: semi-closed)
	3	: CN3L or CN3M (servo drive: closed)
	5	: CN5 (spindle drive: speed detection)
	6	: CN6 (spindle drive: orientation)
	7	: CN7 (spindle drive: C axis)
	67	: CN6 + CN7 (spindle drive: orientation + C axis)
	71	: CN7 (spindle drive: C axis) + CES11 (NC: threading)
Model	V	: For servo
	P	: For spindle

5.2 Cable details

> **⚠ CAUTION**
>
> Do not mistake the connection when manufacturing the detector cable. Failure to observe this could lead to runaway.

5.2.1 Communication cable SH21 (semi ordered product)

Application	Connector 1	Connector 2	L
NC ↔ drive unit	CSH21/22	CN1A	
Drive unit ↔ drive unit	CN1B	CN1A	Standard: 350mm
Drive unit ↔ power supply	CN4	CN4	Standard: 350mm
Drive unit ↔ battery unit	CN1B	CN1A1	Standard: 350mm

Part No.	Part name	Model	Maker
000			
101	Connector (plastic shell)	10320-3210-000	3M
102	Cable	10PVV-SB AWG28×10P(BK0-NC9072)	3M
103	Connector (plug)	10120-6000EL	3M

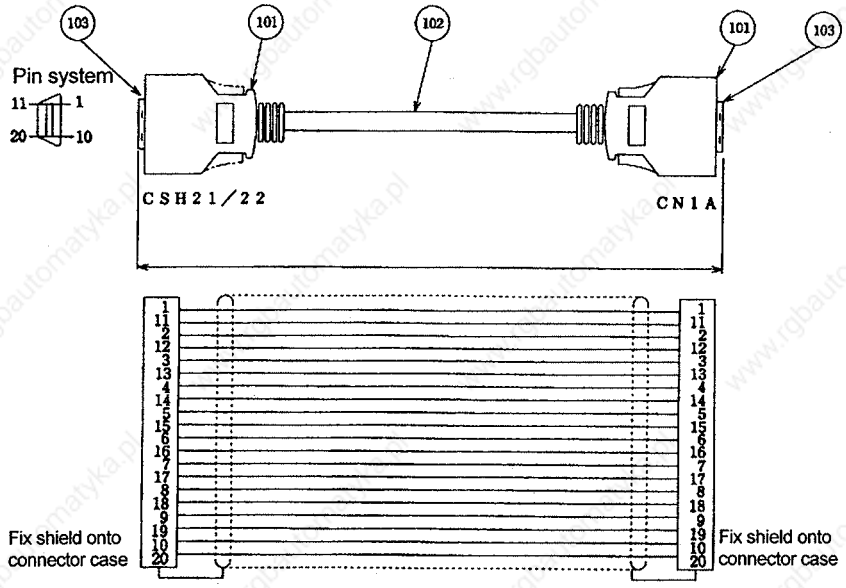

5.2.2 Terminator A-TM (ordered part)

Model
A-TM

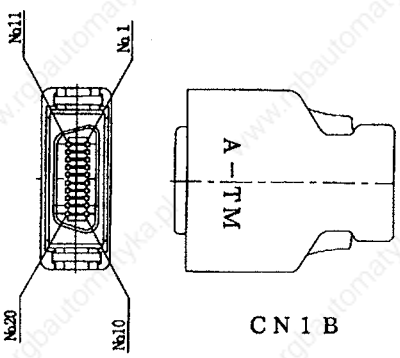

5.2.3 Servo drive unit detector cable

(1) HA053/13 motor built-in detector cable

(a) ① CNV2, CNV3, CNV2L, CNV2M, CNV3L, CNV3M (cable length ≤ 20m)

Part No.	Part name	Model	Qty/type			Maker
			2-type	3-type	E-type	
101	Connector (shell)	10320-52F0-008	1	1	1	3M
102	Connector (plug)	10120-3000VE	1	1	1	3M
103						
104	Cable	TS-91026 2P×0.3SQ+10P×0.2SQ	1	1	1	DDK
105	Cannon connector	MS3108B20-29S		1		DDK, Japan Aviation Electronics
106	Connector clamp	MS3057-12A	1	1		DDK, Japan Aviation Electronics
107						
108	Cannon connector	MS3106B20-29S	1			DDK, Japan Aviation Electronics

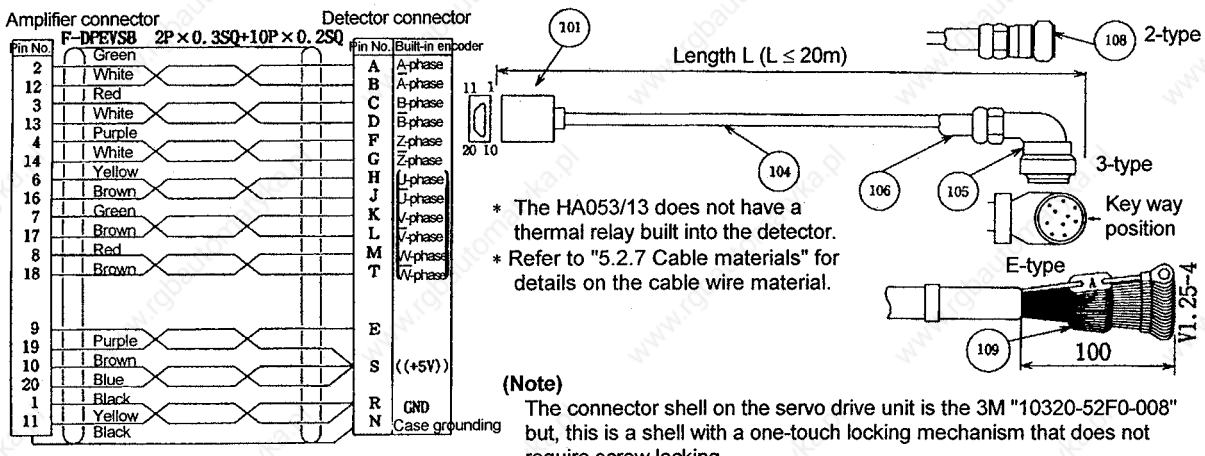

(Note)
The connector shell on the servo drive unit is the 3M "10320-52F0-008" but, this is a shell with a one-touch locking mechanism that does not require screw locking.
When ordering the cables from Mitsubishi, the shell "10320-52F0-008" with this one-touch lock mechanism will be used.
However, if the cable is to be manufactured by the user, the shell "10320-52A0-008" (3M) with the screw lock mechanism can be used instead of the above shell.

(b) ② CNV2, CNV3, CNV2L, CNV2M, CNV3L, CNV3M (20m < cable length ≤ 30m)

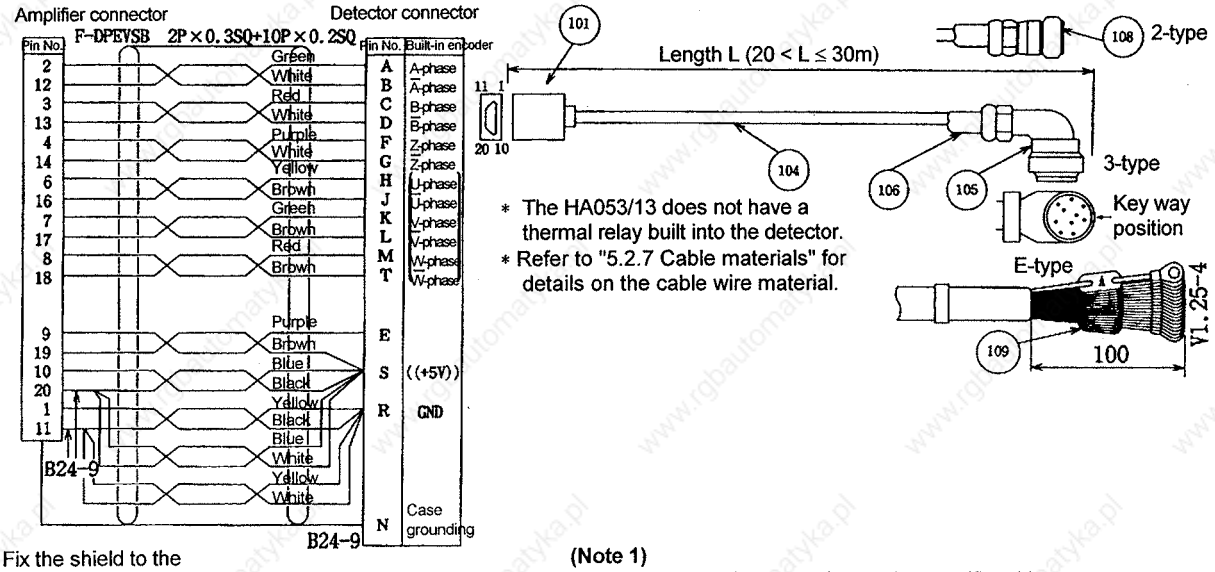

(Note 1)
For the 11.20 pin connection on the amplifier side connector, bundle the cable wires, connect the wires by soldering, and insulate with a heat contraction tube.

(Note) The cable length must be 30m or less.

(2) Cables for OHE25K-□, OHA25K-□, OSE104□, OSA104□, OSE105□ and OSA105□ detectors

(a) ① CNV2, CNV3, CNV2L, CNV2M, CNV3L, CNV3M (cable length ≤ 20m)

Part No.	Part name	Model	Qty/type			Maker
			2-type	3-type	E-type	
101	Connector (shell)	10320-52F0-008	1	1	1	3M
102	Connector (plug)	10120-3000VE	1	1	1	3M
103						
104	Cable	TS-91026 2P×0.3SQ+10P×0.2SQ	1	1	1	DDK
105	Cannon connector	MS3108B22-14S		1		DDK, Japan Aviation Electronics
106	Connector clamp	MS3057-12A	1	1		DDK, Japan Aviation Electronics
107						DDK, Japan Aviation Electronics
108	Cannon connector	MS3106B22-14S	1			

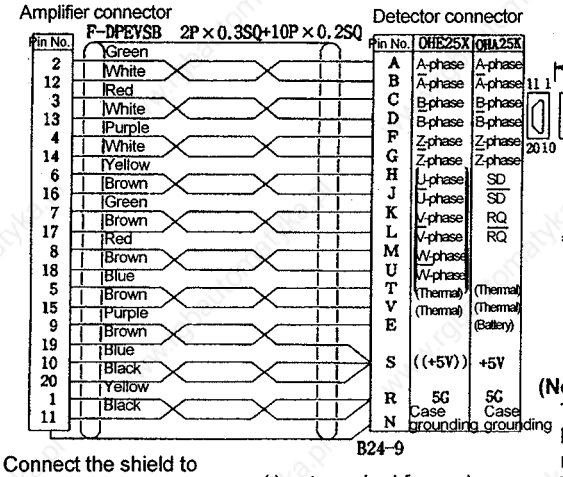

Connect the shield to the connector case

( ) not required for scale
(( )) not required for 5V built-in type scale

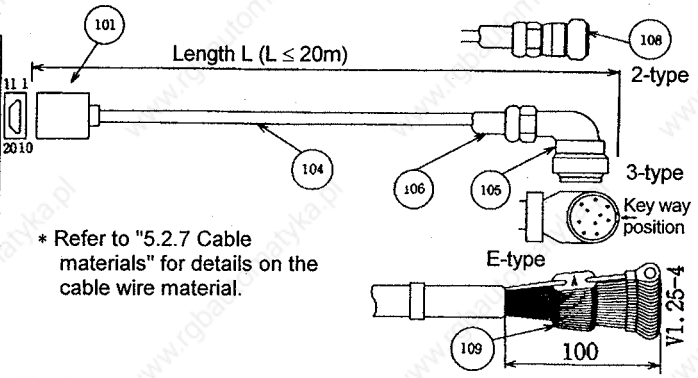

* Refer to "5.2.7 Cable materials" for details on the cable wire material.

(Note)
The connector shell on the servo drive unit is the 3M "10320-52F0-008" but, this is a shell with a one-touch locking mechanism that does not require screw locking.
When ordering the cables from Mitsubishi, the shell "10320-52F0-008" with this one-touch lock mechanism will be used.
However, if the cable is to be manufactured by the user, the shell "10320-52A0-008" (3M) with the screw lock mechanism can be used instead of the above shell.

(b) ② CNV2, CNV3, CNV2L, CNV2M, CNV3L, CNV3M (20m < cable length ≤ 30m)

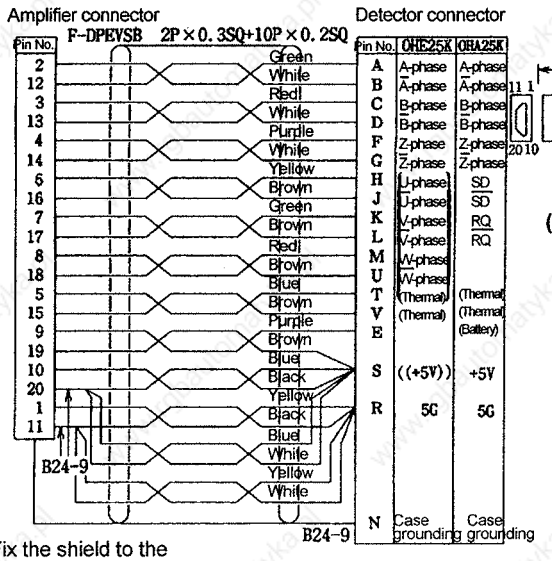

Fix the shield to the connector case

( ) not required for scale
(( )) not required for 5V built-in type scale

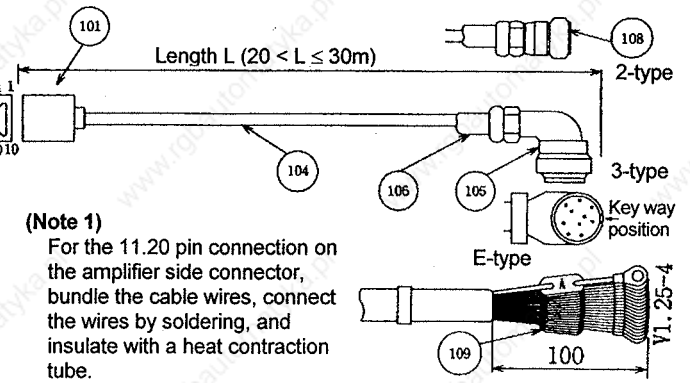

(Note 1)
For the 11.20 pin connection on the amplifier side connector, bundle the cable wires, connect the wires by soldering, and insulate with a heat contraction tube.

* Refer to "5.2.7 Cable materials" for details on the cable wire material.

(Note) The cable length must be 30m or less.

5.2.4 Brake cable

(1) 9kW and below Mechanical brakes

Part No.	Part name	Model	Maker
101	Connector	1-178128-3	Japan Amplifier
102	Contact	1-175218-2	Japan Amplifier

Line size : 0.5 ~ 1.25SQ

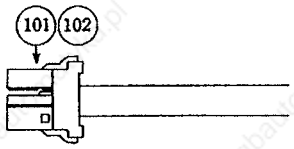

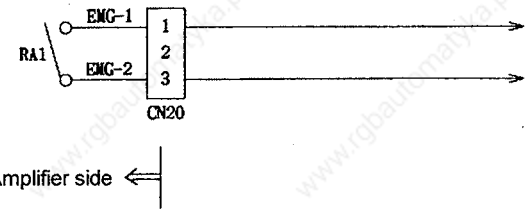

(2) 11kW, 15kW Mechanical brakes and dynamic brakes

Part No.	Part name	Model	Maker
101	Connector	1-178128-3	Japan Amplifier
102	Contact	1-175218-2	Japan Amplifier

Line size : 0.5 ~ 1.25SQ

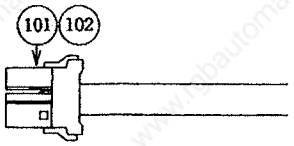

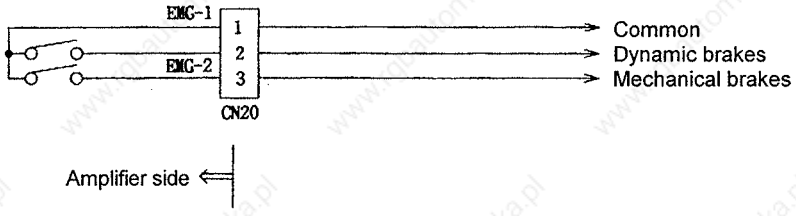

5.2.5 Communication cable SH21 connector

(a) 10320-3210-000

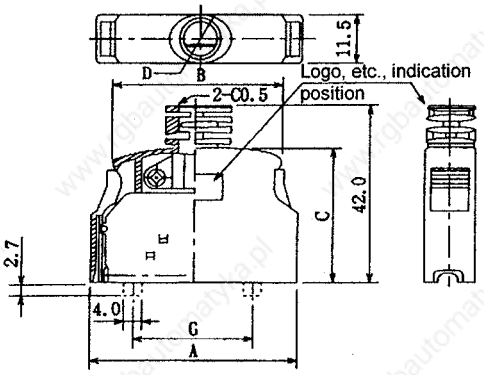

■A	■B	■C	■D	■E	■F	■G (–A00)	■G (–B00)	■G (–C00)
29.7	20.9	33.0	ø6.7	23.8	27.45	16.55	13.15	9.15

Designated dimension tolerance

Dimension	.0	.00
Tolerance	± .3	± .13

Unit : mm

Reference drawing for combination

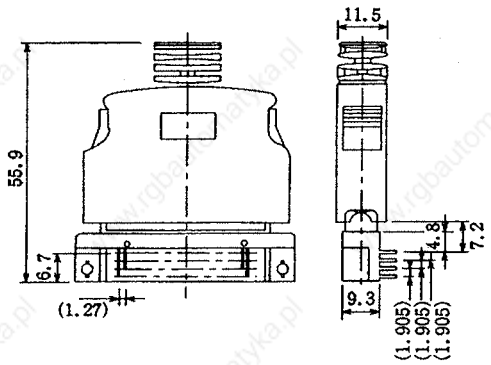

Recommended panel cut dimensions drawing

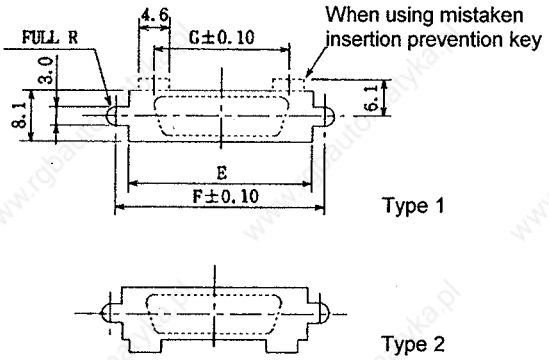

(b) 10320-52F0-008

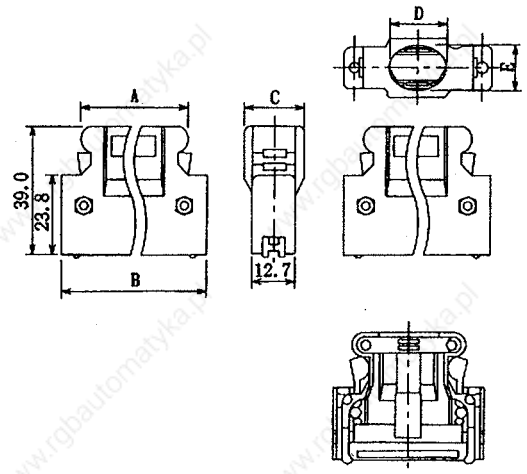

■A	■B	■C	■D	■E	■F
22.0	33.0	14.0	12.0	10.0	27.4

Designated dimension tolerance

Dimension	.0	.00
Tolerance	± .3	± .13

Unit : mm

Reference drawing for combination

5.2.6 Cannon plug for servomotor detector

1. Standard plug

(1) Angle plug MS3108B20-29S (for HA053/13 motor built-in encoder)

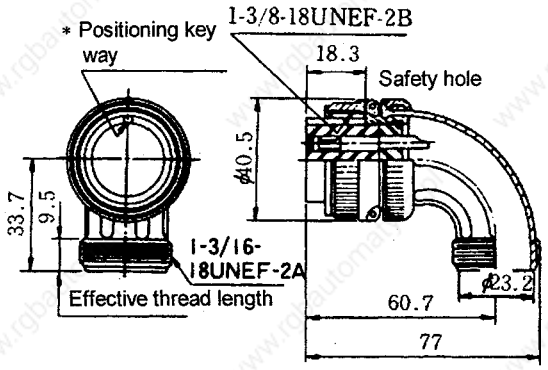

* Key position of cannon connector : motor flange direction

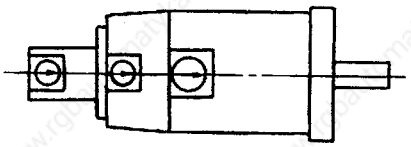

(2) Straight plug MS3106B20-29S (for HA053/13 motor built-in encoder)

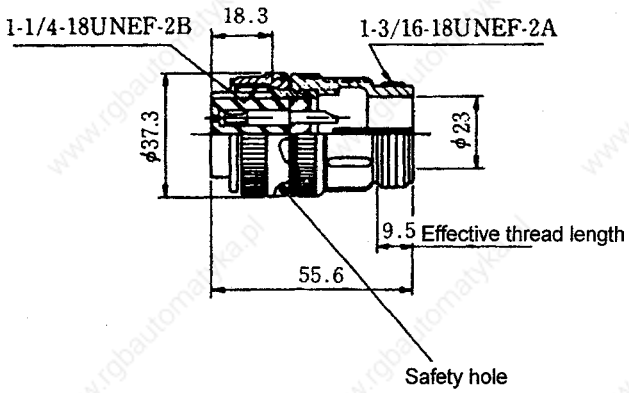

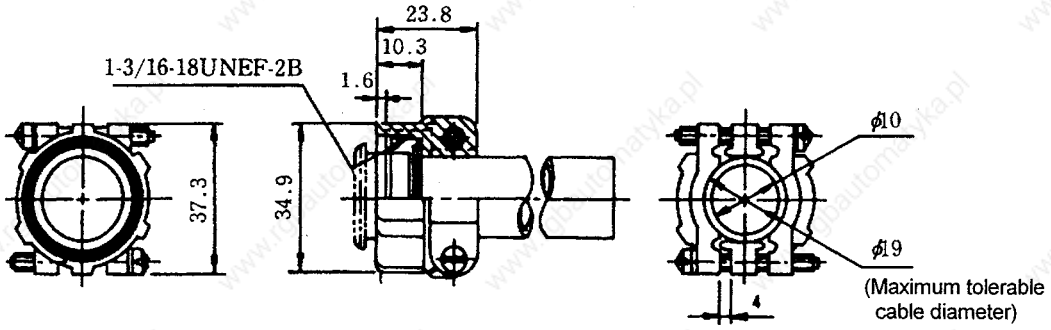

The servo drive unit and the motor are not provided with connector and cables.

(3) Angle plug MS3108B22-14S
(for OHE25K-□/OHA25K-□/OSE104□/OSA104□/OSE105□/OSA105)

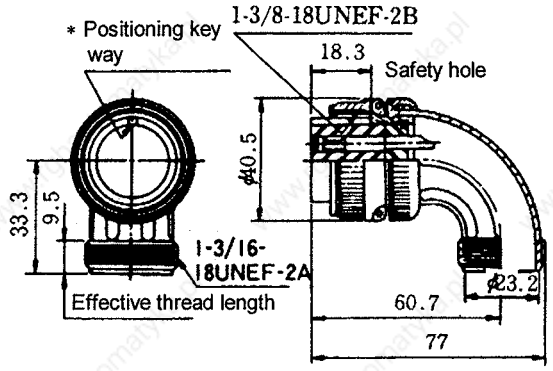

* Key position of cannon connector : motor flange direction

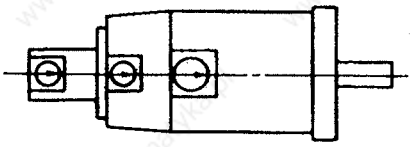

(4) Straight plug MS3106B22-14S
(for OHE25K-□/OHA25K-□/OSE104□/OSA104□/OSE105□/OSA105)

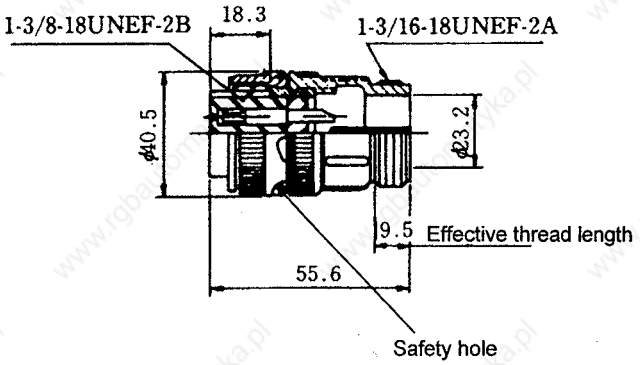

The servo drive unit and the motor are not provided with connector and cables.

2. JIS corresponding plugs (Hirose)

If the JIS B6015 standards must be followed, use the following connectors.
(JIS B6015 standards)

a. In accordance to MIL-C-5015 (US military standards)
b. Structure in which grounding is connected before other circuits are connected, and shut off after other circuits are shut off.
c. Waterproof and oil-proof.

(1) Angle plug H/MS3108B20-29S-N (for HA053/13 motor built-in encoder)

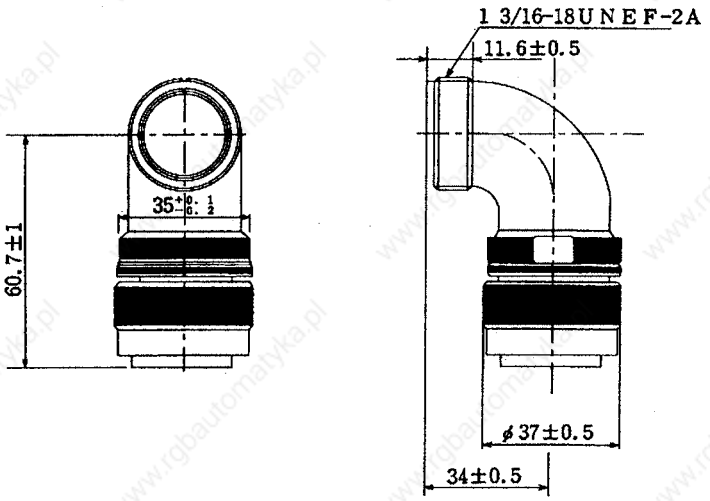

(2) Straight plug H/MS3106A20-29S-N (for HA053/13 motor built-in encoder)

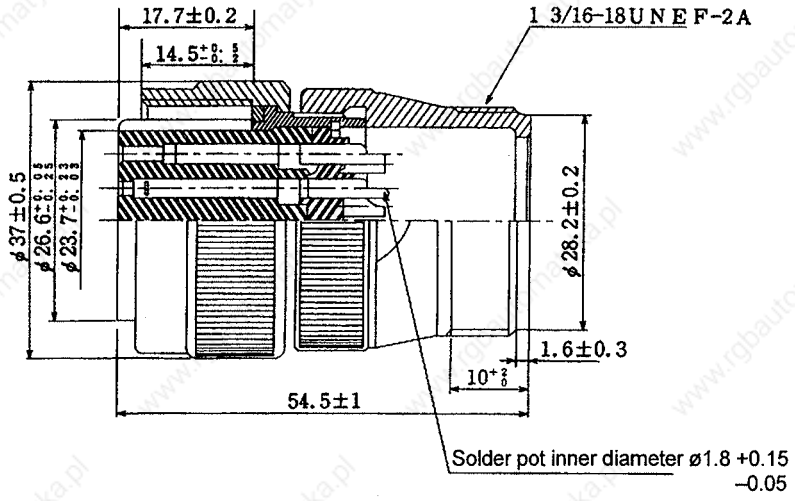

(3) Angle plug H/MS3108B22-14S-N
(for OHE25K-□/OHA25K-□/OSE104□/OSA104□/OSE105□/OSA105)

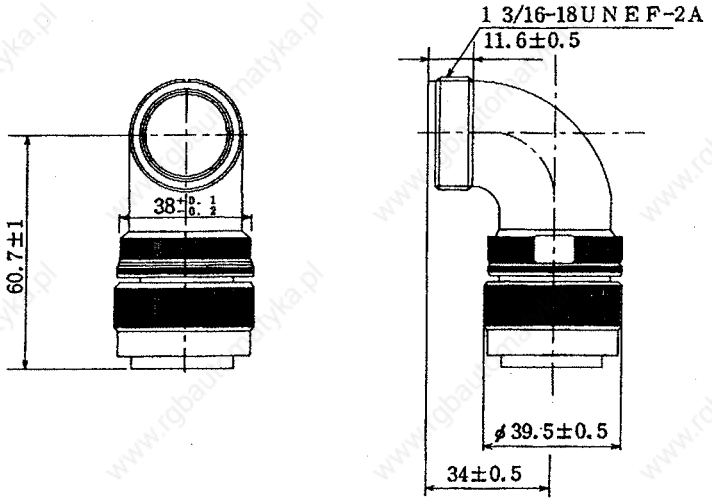

(4) Straight plug H/MS3106A22-14S-N
(for OHE25K-□/OHA25K-□/OSE104□/OSA104□/OSE105□/OSA105)

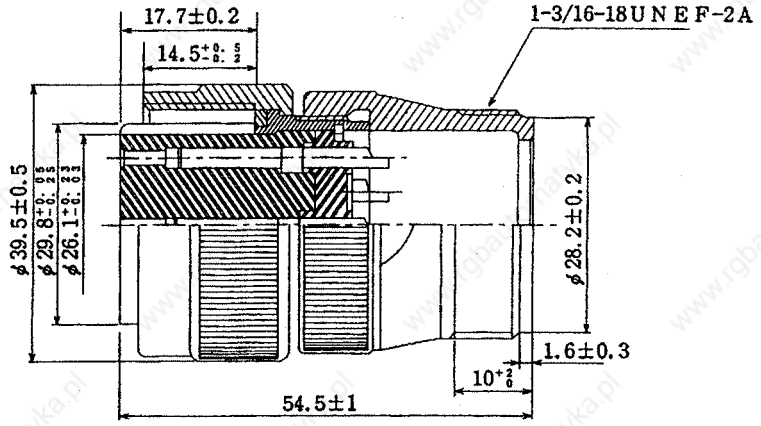

5.2.7 Cable materials

When the wiring length between the motor and the amplifier is long and the motor moves, high bending resistent cables should be used.
The following table represents the typical types of the cables made by Mitsubishi.

12 pair shield cable
Model: TS-91026 $0.3mm^2 \times 2$ pairs + $0.2mm^2 \times 10$ pairs
(DDK)

Type	No. of wire cores and size	Finished outer diameter	Characteristics of one wire				Bending resistance property	Color
			Configuration	Conductor resistance	Withstand voltage	Insulation resistance		
A	2 pairs $0.3mm^2$	11.6mm	60/0.08mm	63Ω/km or less	750VAC/min.	60MΩ/km or more	Approx. 140×10^4 times at R200	Black
B	10 pairs $0.2mm^2$		40/0.08mm	95Ω/km or less				

Structural drawing

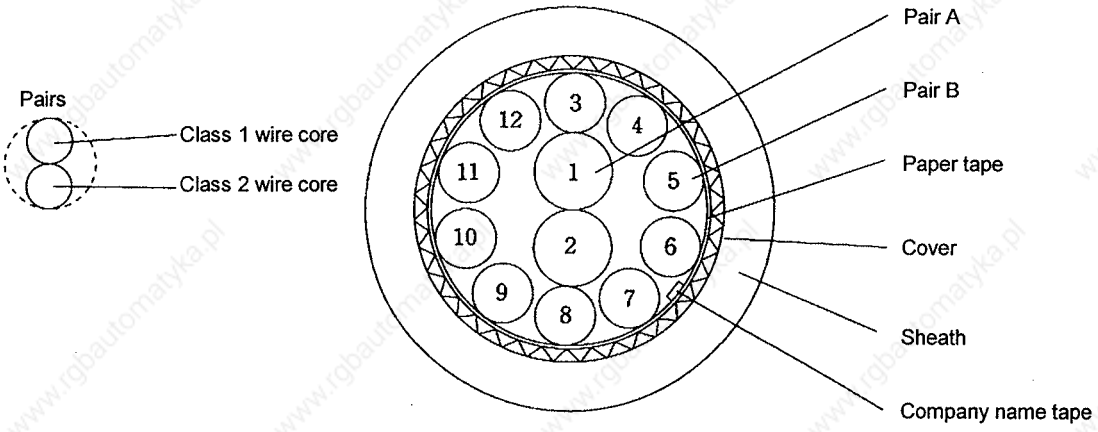

Core identification table

Type of pair	A		B									
Pair No.	1	2	3	4	5	6	7	8	9	10	11	12
Class 1 wire core insulation color	Blue	Yellow	Green	Red	Purple	Blue	Yellow	Green	Red	Purple	Blue	Yellow
Class 2 wire core insulation color	White	White	White	White	White	Brown	Brown	Brown	Brown	Brown	Black	Black

5.2.8 Cable protection tube (Measures against noise)

When noise cannot be prevented or the noise-proof property is laxed, the following metal tube should be selected and the signal cable should be passed through the tube.
The tube is also used when the cable sheath is cut or abraded by cutting chips. In addition, on the detector side, the cable clamps MS3057 cannot be mounted; when the cables are exposed to bending and vibration, or the cable may break. As the cable type 0.2SQ cannot be used, a cable type with a large conductor area should be used. The shield cable or the twist cable should be selected according to the instructions of Mitsubishi.

Application	Example of assembling
Motor detector	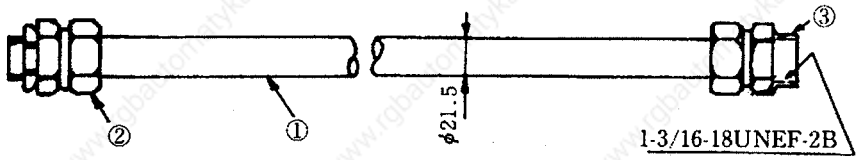

① Tube	Connector			Manufacturer
	② Amplifier	Installation screw	③ Motor detector	
FBA-4 (FePb wire blade sheath)	RBC-104(Straight) RBC-204 (45°) RBC-304 (90°)	G16 G16 G16	RCC-104-CA2022	Nippon Flex K/K
Preca tube PA-2 #17 (FePb sheath)	BC-17 (Straight)	Conduit thread 15	PDC20-17	Sankei S/S
High flex PT #17 (FePb sheath)	PSG-104 (Straight) PLG-17 (90°) PS-17 (Straight)	Thread dia. ø26.4 Thread dia. ø26.4 PF 1/2	PDC20-17	Daiwa Dengyo K/K

5.2.9 Oil proof type AC servomotor cable connectors (Recommendation 1)

When using the motor and cable in an environment where cutting fluids or lubricants may come in contact at all, use the oil-proof specification cable connector (plug) shown below for the motor and encoder.

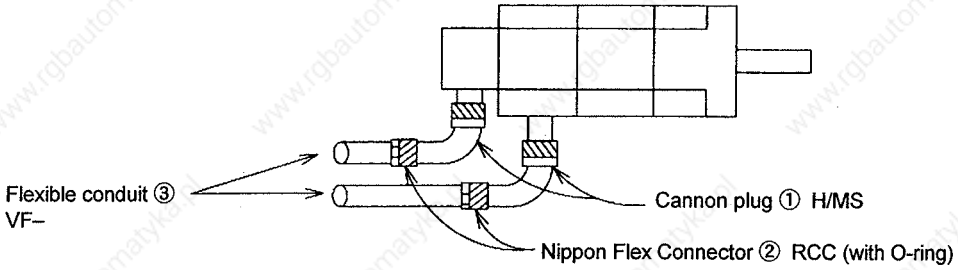

For motor connector

Servomotor model		① Cannon plug (Plug unit)		② Nippon Flex connector	③ Flexible conduit	
		1) Hirose, 2) Japan Aviation Electronics, 3) DDK		Nippon Flex	Nippon Flex	Min. inner dia.
		90° angle type	Straight type			
HA053C HA13C HA23NC HA33NC	Standard	1) H/MS3108A18-12S-D	1) H/MS3106A18-12S-D	RCC-103CA18 (with O-ring)	VF-03	10.6
				RCC-104CA18 (with O-ring)	VF-04	14.0
	European standard part	2) JL04V-8A18-12SE-EB 3) CE05-8A18-12SD-B-BAS	2) JL04V-6A18-12SE-EB 3) CE05-6A18-12SD-B-BSS	RCC-106CA18 (with O-ring)	VF-06	19.0
HA40NC~HA80NC HA43NC~HA83NC HA50LC~HA150LC HA53LC~HA153LC	Standard	1) H/MS3108A22-23S-D	1) H/MS3106A22-23S-D	RCC-104CA2022 (with O-ring)	VF-04	14.0
				RCC-106CA2022 (with O-ring)	VF-06	19.0
	European standard part	2) JL04V-8A22-23SE-EB 3) CE05-8A22-23SD-B-BAS	2) JL04V-6A22-23SE-EB 3) CE05-6A22-23SD-B-BSS	RCC-108CA2022 (with O-ring)	VF-08	24.4
HA100NC~HA300NC HA103NC~HA203NC HA200LC~HA500LC HA203LC~HA303LC	Standard	1) H/MS3108A24-10S-D	1) H/MS3106A24-10S-D	RCC-104CA2428 (with O-ring)	VF-04	14.0
				RCC-106CA2428 (with O-ring)	VF-06	19.0
	European standard part	2) JL04V-8A24-10SE-EB 3) CE05-8A24-10SD-B-BAS	2) JL04V-6A24-10SE-EB 3) CE05-6A24-10SD-B-BSS	RCC-108CA2428 (with O-ring)	VF-08	24.4

For brake cable

HA053CB~33NCB HA100NCB~300NCB	H/MS 3108A 10SL-4S	H/MS 3106A 10SL-4S	RCC-102CA12 (with O-ring)	VF-02	8.3

For detector cable

HA053/13 motor built-in encoder	H/MS 3108B 20-29S-N	H/MS 3106A 20-29S-N	RCC-104CA2022 (with O-ring)	VF-04	14.0
			RCC-106CA2022 (with O-ring)	VF-06	19.0
OHE25K-□ OHA25K-□ OSE104□ OSA104□ OSE105□ OSA105□	H/MS 3108B 22-14S-N	H/MS 3106A 22-14S-N	RCC-104CA2022 (with O-ring)	VF-04	14.0
			RCC-106CA2022 (with O-ring)	VF-06	19.0
			RCC-108CA2022 (with O-ring)	VF-08	24.4

5.2.10 Oil-proof type servomotor connectors (Recommendation 2)

When using the motor and cable in an environment where cutting fluids or lubricants may come in contact at all, use the oil-proof specification connector (plug) shown below for the motor and encoder.

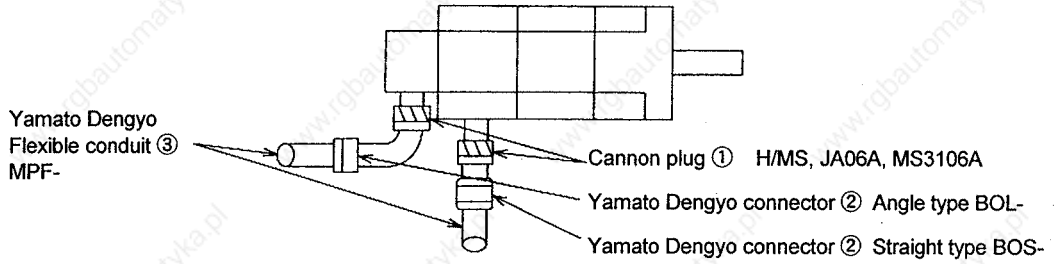

For motor connector

Servomotor model	① Cannon plug (Plug unit)		② Yamato Dengyo connector	③Yamato Dengyo flexible conduit	
	1) Hirose, 2) Japan Aviation Electronics, 3) DDK straight type		Model	Model	Min. inner diameter (guide collar)
	Standard	European standard part			
HA053C HA13C HA23NC HA33NC	1) H/MS3106A18-12S-D (03) 2) JA06A-18-12S-J1 3) MS3106A18-12S (D190)	2) JL04V-6A18-12SE 3) CE05-6A18-12SD-B	BOS-18-13 BOL-18-13	MPF-13	11.4
			BOS-18-15 BOL-18-15	MPF-15	14.2
			BOS-18-19 BOL-18-19	MPF-19	17.2
HA40NC~HA80NC HA43NC~HA83NC HA50LC~HA150LC HA53LC~HA153LC	1) H/MS3106A22-23S-D (03) 2) JA06A-22-23S-J1 3) MS3106A22-23S (D190)	2) JL04V-6A22-23SE 3) CE05-6A22-23SD-B	BOS-22-15 BOL-22-15	MPF-15	14.2
			BOS-22-19 BOL-22-19	MPF-19	17.2
			BOS-22-25 BOL-22-25	MPF-25	23.5
HA100NC~HA300NC HA103NC~HA203NC HA200LC~HA500LC HA203LC~HA303LC	1) H/MS3106A24-10S-D (03) 2) JA06A-24-10S-J1 3) MS3108B24-10S (D190)	2) JL04V-6A24-10SE 3) CE05-6A24-10SD-B	BOS-24-15 BOL-24-15	MPF-15	14.2
			BOS-24-19 BOL-24-19	MPF-19	17.2
			BOS-24-25 BOL-24-25	MPF-25	23.5

For brake cable

HA053CB~33NCB HA100NCB~300NCB	H/MS 3106A10SL-4S (03) JA06A-10SL-4S-JI MS3106A10SL-4S (D190)	(Hirose) (Japan Aviation Electronics) (DDK)	BOS-10-9 BOL-10-9	MPF-9	8.2

For detector cable

HA053/13 motor built-in encoder	H/MS 3106A20-29S-N (03) JA06A-20-29S-JI MS3106A20-29S (D190)	(Hirose) (Japan Aviation Electronics) (DDK)	BOS-20-15 BOL-20-15	MPF-15	14.2
			BOS-20-19 BOL-20-19	MPF-19	17.2
OHE25K-□ OHA25K-□ OSE104□ OSA104□ OSE105□ OSA105□	H/MS 3106A22-14S-N (03) JA06A-22-14S-JI MS3106A22-14S (D190)	(Hirose) (Japan Aviation Electronics) (DDK)	BOS-22-15 BOL-22-15	MPF-15	14.2
			BOS-22-19 BOL-22-19	MPF-19	17.2
			BOS-22-25 BOL-22-25	MPF-25	23.5

5.2.11 Cable clamp

Mount the grounding plate near the servo amplifier, peel the cable sheath, and press the peeled shield cable to the grounding plate using the cable clamp. If the cable is thin, clamp several cables.

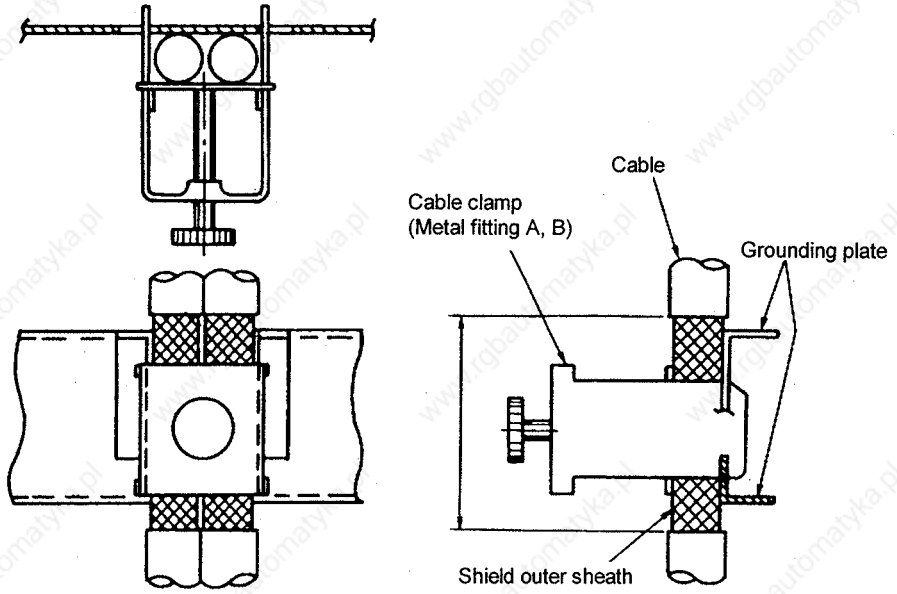

Clamp section drawing

The earth plate D and cable clamps A and B can be supplied by Mitsubishi.

Grounding plate (D) outline drawing

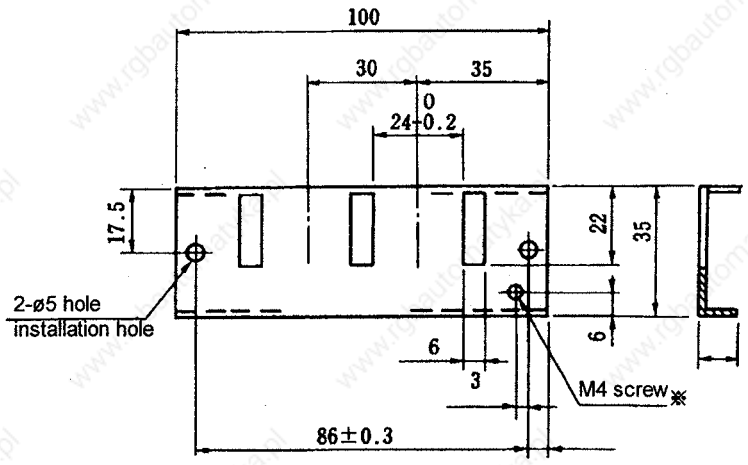

- The grounding wire should be connected between the grounding plate and the cabinet grounding plate.
- Two metal fittings A can be used.

※ Screw hole for wiring to cabinet grounding plate

Cable clamp outline drawing

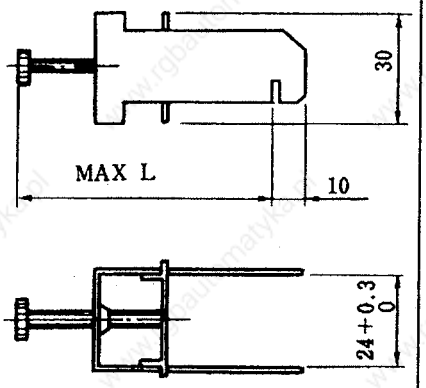

	L
Metal fitting A	70
Metal fitting B	45

5.2.12 Spindle control circuit cable list

No.	Application	Drive unit side connection connector	Cable name	Connected device Parts name Maker	Arranged by	Applicable cable finished state	Connected device Parts name Maker	Arranged by
(1)	Motor temperature switch signal Motor speed detection signal	CN5	CNP5 cable	Spindle drive unit (Shell) 10320-52F0-008 (Plug) 10120-3000VE Sumitomo 3M	Semi ordered part	Twisted pair batch shield cable 0.2SQ Maximum diameter 11mm	Motor (connector) Motor (lead wire terminal) (Connector) AMP-350720-1 (Pin) AMP-350689-1 Japan Amplifier	Enclosed with motor
(2)	Orientation detection signal Magnesensor	CN6	CNP6M cable	Spindle drive unit (Shell) 10320-52F0-008 (Plug) 10120-3000VE Sumitomo 3M	Semi ordered part	Twisted pair batch shield cable 0.2SQ Maximum diameter 11mm	Magnesensor amplifier TRC116-12A0-7F10.5 Tajimi Musen	Enclosed with magne-sensor amplifier
(3)	Orientation detection signal Encoder	CN6	CNP6A cable	Spindle drive unit (Shell) 10320-52F0-008 (Plug) 10120-3000VE Sumitomo 3M	Semi ordered part	Twisted pair batch shield cable 0.2SQ Maximum diameter 11mm	Encoder (RFH-1024-) MS3106A20-29S DDK	Enclosed with encoder
(4)	C-axis detection signal C-axis encoder (OSE90K + 1024)	CN7	CNP7A cable	Spindle drive unit (Shell) 10320-52F0-008 (Plug) 10120-3000VE Sumitomo 3M	Semi ordered part	Twisted pair batch shield cable 0.2SQ Maximum diameter 11mm	Encoder (OSE90K+1024) MS3106A20-29S DDK	Enclosed with encoder
(5)	C-axis detection signal C-axis built-in encoder (MBE90K)	CN7	CNP7B cable	Spindle drive unit (Shell) 10320-52F0-008 (Plug) 10120-3000VE Sumitomo 3M	Semi ordered part	Twisted pair batch shield cable 0.2SQ Maximum diameter 11mm	Encoder (MBE90K) (Housing) 69176-020 (Pin) 48235-000 DuPont	Enclosed with encoder
(6)	C-axis detection signal C-axis built-in encoder (MHE90K)	CN7	CNP7H cable	Spindle drive unit (Shell) 10320-52F0-008 (Plug) 10120-3000VE Sumitomo 3M	Ordered part	Twisted pair batch shield cable 0.2SQ Maximum diameter 7mm	Encoder (MHE90K) (Housing) JAC-15P (Pin) J-SP1140 Japan Solderless	Enclosed with encoder
(7)	C-axis encoder C-axis detection signal + orientation detection signal (OSE90K + 1024)	CN6 + CN7	CNP67A cable	Spindle drive unit (Shell) 10320-52F0-008 ×2 (Plug) 10120-3000VE ×2 Sumitomo 3M	Semi ordered part	Twisted pair batch shield cable 0.2SQ Maximum diameter 11mm	Encoder (OSE90K+1024) MS3106A20-29S DDK	Enclosed with encoder

No.	Application	Drive unit side connection connector	Cable name	Connected device Parts name Maker	Arranged by	Applicable cable finished state	Connected device Parts name Maker	Arranged by
(8)	C-axis encoder C-axis detection signal + NC speed indication signal (OSE90K + 1024)	CN7 + CES11	CNP71A cable	Spindle drive unit (Shell) 10320-52F0-008 (Plug) 10120-3000VE Sumitomo 3M CNC (M500) (Connector) CDA-15P (Contact) CD-PC-111 (Case) HDA-CTF Hirose	Semi ordered part	Twisted pair batch shield cable 0.2SQ Maximum diameter 11mm 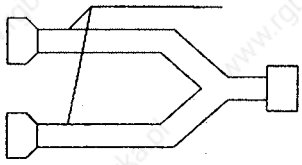	Encoder (OSE90K+1024) MS3106A20-29S DDK	Enclosed with encoder
(9)	C-axis built-in encoder C-axis detection signal + NC speed indication signal (MBE90K)	CN7 + CES11	CNP71B cable	Spindle drive unit (Shell) 10320-52F0-008 (Plug) 10120-3000VE Sumitomo 3M CNC (M500) (Connector) CDA-15P (Contact) CD-PC-111 (Case) HDA-CTF Hirose	Semi ordered part	Twisted pair batch shield cable 0.2SQ Maximum diameter 11mm 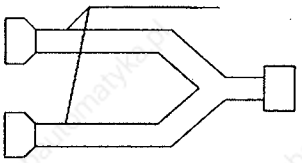	Encoder (MBE90K) (Housing) 69176-020 (Pin) 48235-000 DuPont 00	Enclosed with encoder
(10)	C-axis built-in encoder C-axis detection signal + NC speed indication signal (MHE90K)	CN7 + CES11	CNP71H cable	Spindle drive unit (Shell) 10320-52F0-008 (Plug) 10120-3000VE Sumitomo 3M CNC (M500) (Connector) CDA-15P (Contact) CD-PC-111 (Case) HDA-CTF Hirose	Ordered part	Twisted pair batch shield cable 0.2SQ Maximum diameter 7mm 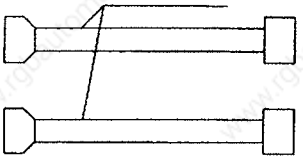	Encoder (MHE90K) (Housing) JAC-15P (Pin) J-SP1140 Japan Solderless (Housing) JAC-15P (Pin) J-SP1140 Japan Solderless	Enclosed with encoder
(11)	C-axis built-in encoder Motor speed detection signal + motor temperature switch signal (MHE90K)	CN5	CNP5H cable	Spindle drive unit (Shell) 10320-52F0-008 (Plug) 10120-3000VE Sumitomo 3M	Ordered part	Twisted pair batch shield cable 0.2SQ Maximum diameter 7mm 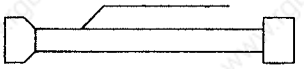	Encoder (MHE90K) (Housing) JEC-9P (Pin) J-SP1140 Japan Solderless	Enclosed with encoder
(12)	Speed detection signal	CN8	CNP8 cable	Spindle drive unit (Shell) 10320-52F0-008 (Plug) 10120-3000VE Sumitomo 3M		Twisted pair batch shield cable 0.2SQ Maximum diameter 11mm 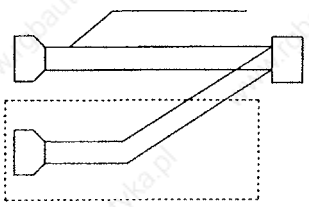 **(Note)** When the spindle has two axes, the [ ] cable must be added.	NC control unit (QX522 card CES11) (Connector) CDA-15P (Contact) CD-PC-1111 (Case) HDA-CTF Hirose	

(Note 1) The connector shell on the spindle drive unit is the 3M "10320-52F0-008" but, this is a shell with a one-touch locking mechanism that does not require screw locking.
When ordering the cables from Mitsubishi, the shell "10320-52F0-008" with this one-touch lock mechanism will be used.
However, if the cable is to be manufactured by the user, the shell "10320-52A0-008" (3M) with the screw lock mechanism can be used instead of the above shell.

(Note 2) Each cable length must be 30m or less.
The cable for the C-axis built-in encoder MHE90K must be 10m or less.

● (1) CNP5 cable ●

Part No.	Part name	Abbr.	Model	Qty/type				
				E-type	2-type			
000								
101	Connector (shell)	CON	10320-52F0-008	1	1			
102	Connector (plug)	CON	10120-3000VE	1	1			
103								
104	Cable	SEN	F-DPEVSB TS-91026 (DDK)	1	1			
105	Connector (housing)	CON	350720-1		1			
106	Connector (pin)	CON	350689-1		8			

Cable name

CNP5–□□–□

- Connector type
  - E : E-type (crimp terminal on lead end)
  - 2 : 2-type (designated connector)
- Axis No. (Axis 1 to 8)
  - 1~8 : Axis 1 ~ 8
- System No.
  - None : Axis 1 system
  - 2 : Axis 2 system
  - P : PLC axis
- Connection connector No.

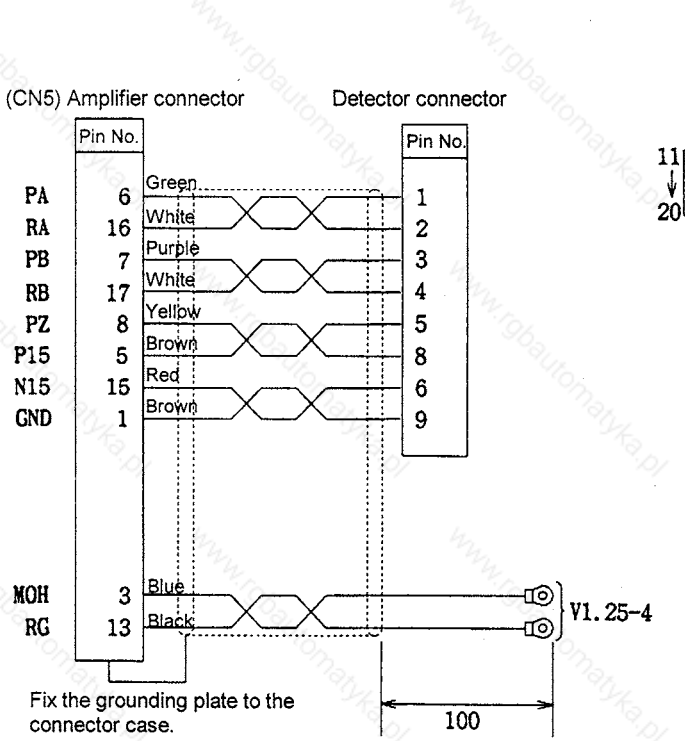

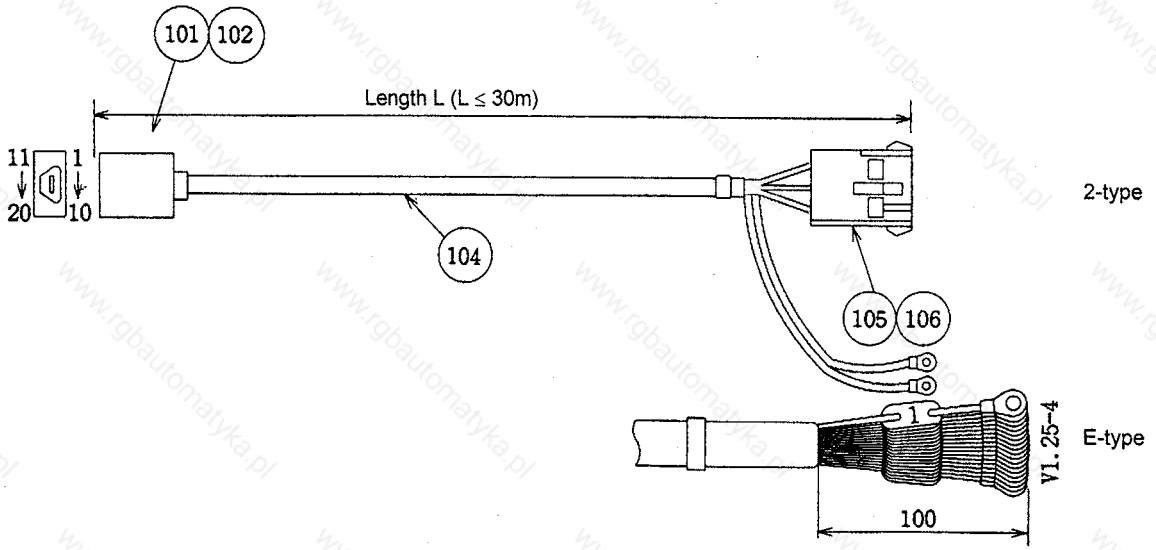

● (2) CNP6M cable ●

Part No.	Part name	Abbr.	Model	Qty/type				
000				E-type	2-type			
101	Connector (shell)	CON	10320-52F0-008	1	1			
102	Connector (plug)	CON	10120-3000VE	1	1			
103								
104	Cable	SEN	F-DPEVSB TS-91026 (DDK)	1	1			
105	Connector	CON	TRC116-12A10-7F10.5		1			
106								
107								
108								

Cable name

CNP6M–□□–□
- Connector type
  - E : E-type (crimp terminal on lead end)
  - 2 : 2-type (designated connector)
- Axis No. (Axis 1 to 8)
  - 1~8 : Axis 1 ~ 8
- System No.
  - None : Axis 1 system
  - 2 : Axis 2 system
  - P : PLC axis
- Magnesensor signal
- Connection connector No.

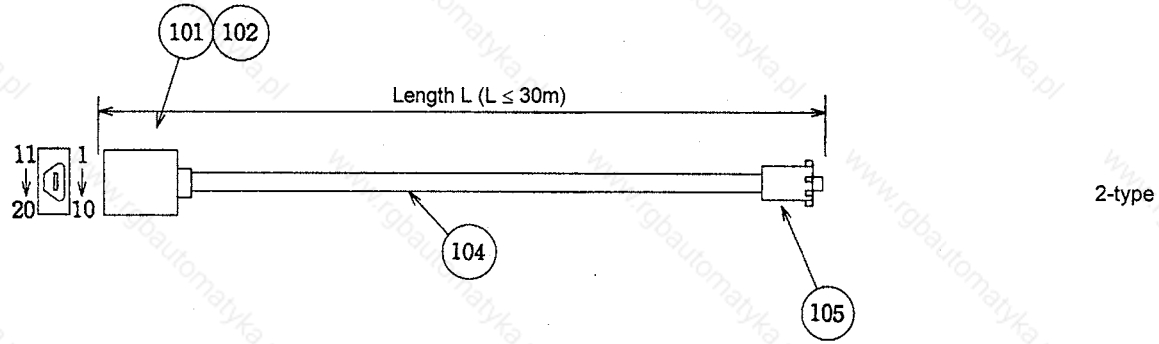

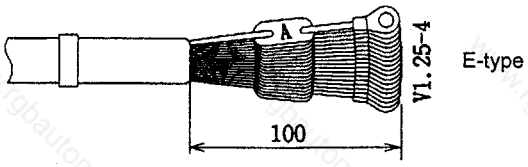

(CN6) Amplifier connector — Detector connector

	Pin No.		Pin No.
MAG	6	Green	A
MAGR	16	White	D
LS	7	Blue	F
LSR	17	Brown	E
P15	5	Purple	C
GND	15	Brown	B

Fix the grounding plate to the connector case.

● (3) CNP6A cable ●

Part No.	Part name	Abbr.	Model	Qty/type				
000				E-type	2-type	3-type		
101	Connector (shell)	CON	10320-52F0-008	1	1	1		
102	Connector (plug)	CON	10120-3000VE	1	1	1		
103								
104	Cable	SEN	F-DPEVSB TS-91026 (DDK)	1	1	1		
105	Cannon connector (angle)	CON	MS3108B20-29S			1		
106	Connector clamp	CON	MS3057-12A		1	1		
107								
108	Cannon connector (straight)	CON	MS3106B20-29S		1			

Cable name

CNP6A–□□–□

- Connector type
  - E : E-type (crimp terminal on lead end)
  - 2 : 2-type (cannon plug straight type)
  - 3 : 3-type (cannon plug L type)
- Axis No. (Axis 1 to 8)
  - 1~8 : Axis 1 ~ 8
- System No.
  - None : Axis 1 system
  - 2 : Axis 2 system
  - P : PLC axis
- Encoder signal (1024P) RFH-1024-
- Connection connector No.

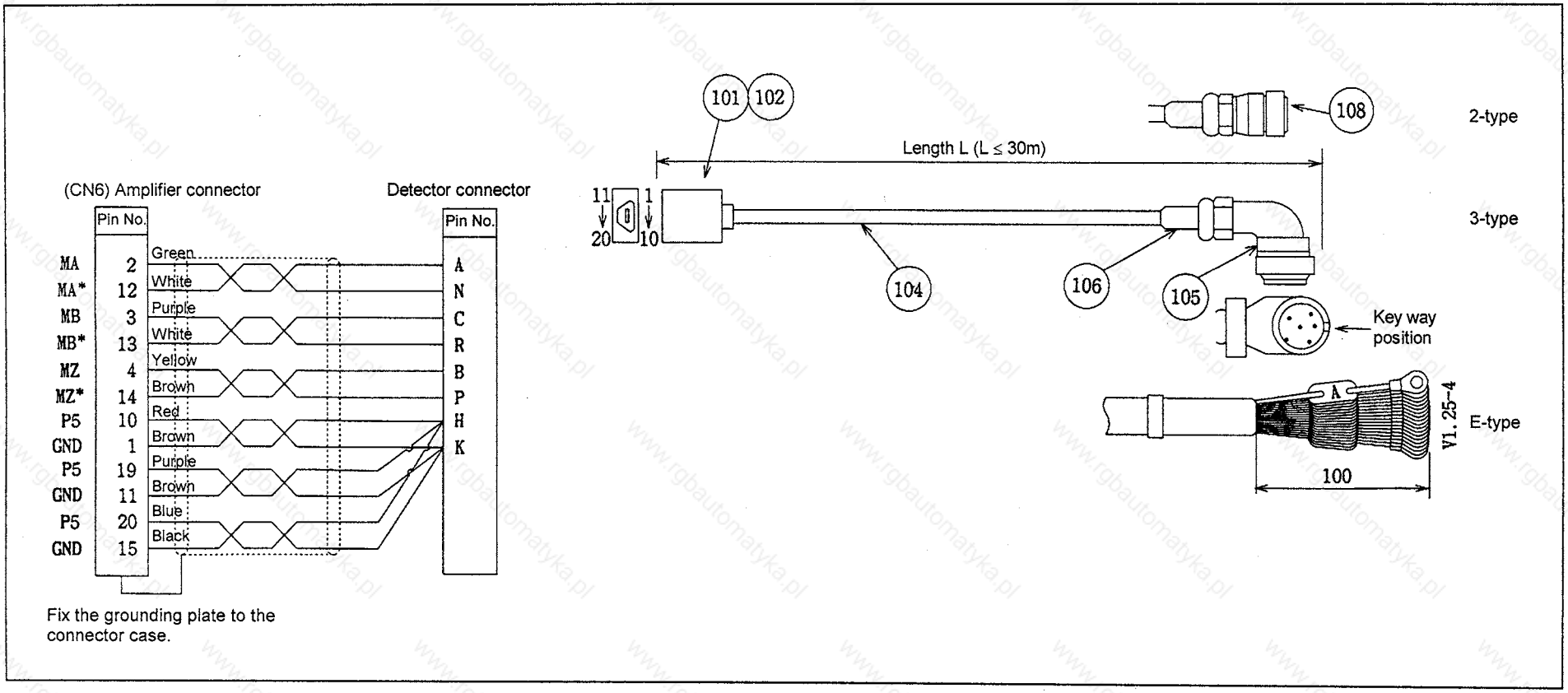

● (4) CNP7A cable ●

Part No.	Part name	Abbr.	Model	Qty/type				
000				E-type	2-type	3-type		
101	Connector (shell)	CON	10320-52F0-008	1	1	1		
102	Connector (plug)	CON	10120-3000VE	1	1	1		
103								
104	Cable	SEN	F-DPEVSB TS-91026 (DDK)	1	1	1		
105	Cannon connector (angle)	CON	MS3108B20-29S			1		
106	Connector clamp	CON	MS3057-12A		1	1		
107								
108	Cannon connector (straight)	CON	MS3106B20-29S		1			

Cable name

CNP7A-□□-□

- Connector type
  - E : E-type (crimp terminal on lead end)
  - 2 : 2-type (cannon plug straight type)
  - 3 : 3-type (cannon plug L type)
- Axis No. (Axis 1 to 8)
  - 1~8 : Axis 1 ~ 8
- System No.
  - None : Axis 1 system
  - 2 : Axis 2 system
  - P : PLC axis
- Shaft type encoder signal (90,000P)
  - OSE90K + 1024
- Connection connector No.

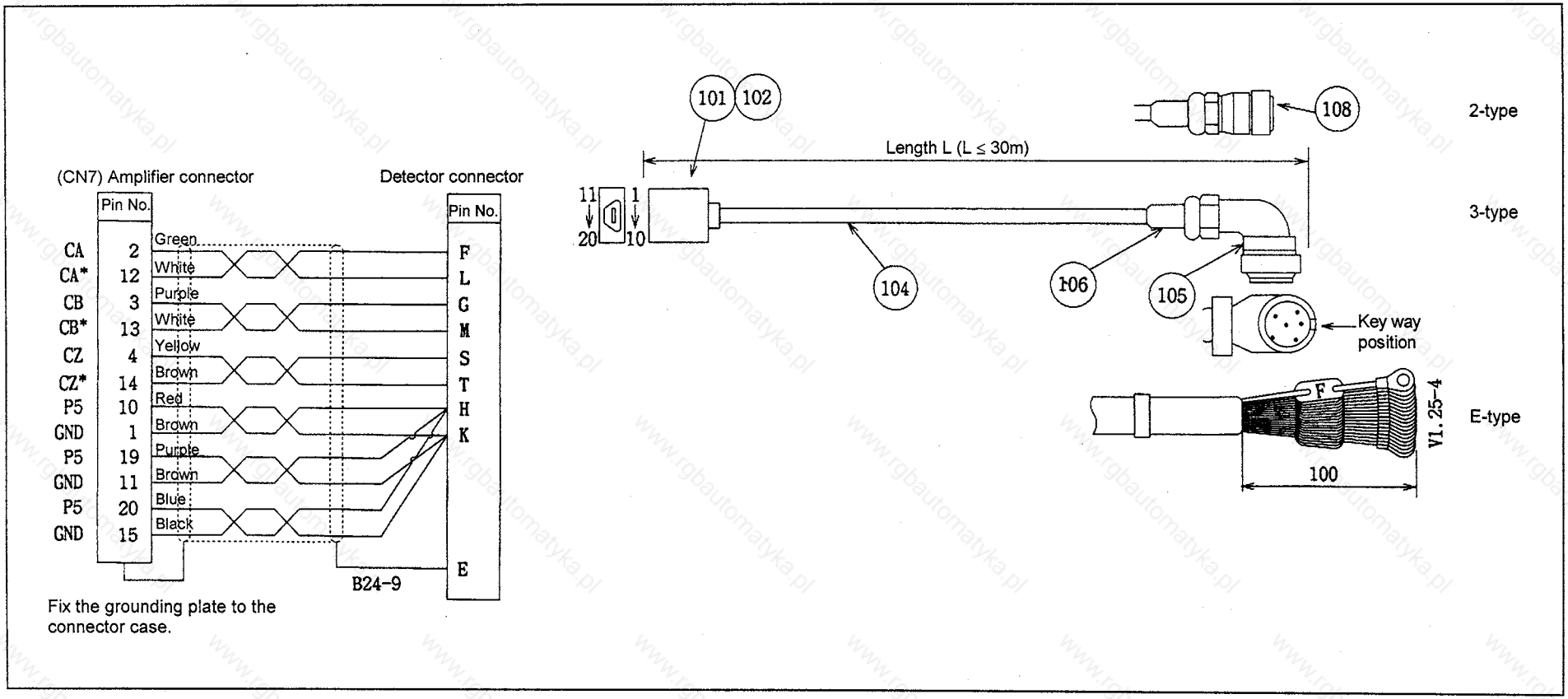

● (5) CNP7B cable ●

Part No.	Part name	Abbr.	Model	Qty/type				
000				E-type	2-type			
101	Connector (shell)	CON	10320-52F0-008	1	1			
102	Connector (plug)	CON	10120-3000VE	1	1			
103								
104	Cable	SEN	F-DPEVSB TS-91026 (DDK)	1	1			
105	Connector (housing)	CON	69176-D20		1			
106	Connector (pin)	CON	48235-000		13			
107								
108								

Cable name

CNP7B–□□–□

- Connector type
  - E : E-type (crimp terminal on lead end)
  - 2 : 2-type (connection connector)
- Axis No. (Axis 1 to 8)
  - 1~8 : Axis 1 ~ 8
- System No.
  - None : Axis 1 system
  - 2 : Axis 2 system
  - P : PLC axis
- Built-in type encoder signal (90,000P)
  - MBE90K
- Connection connector No.

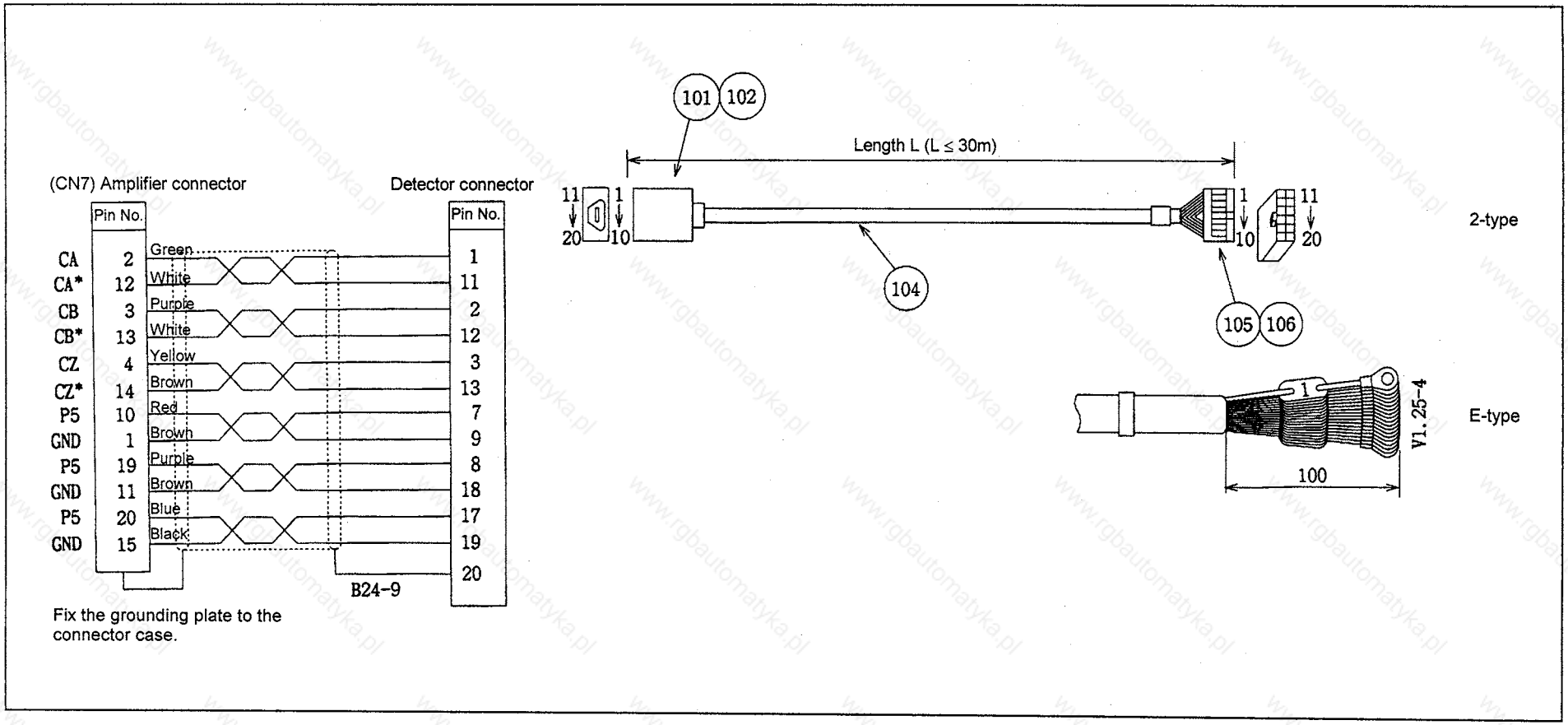

● (6) CNP7H cable ●

Part No.	Part name	Abbr.	Model	Qty/type				
000				E-type	2-type			
101	Connector (shell)	CON	10320-52F0-008	1	1			
102	Connector (plug)	CON	10120-3000VE	1	1			
103								
104	Cable	SEN		1	1			
105	Connector (housing)	CON	JAC-15P		1			
106	Connector (pin)	CON	J-SP1140		7			
107								
108								

Cable name

CNP7H–□□–□

- Connector type
  - E : E-type (crimp terminal on lead end)
  - 2 : 2-type (designated connector)
- Axis No. (Axis 1 to 8)
  - 1~8 : Axis 1 ~ 8
- System No.
  - None : Axis 1 system
  - 2 : Axis 2 system
  - P : PLC axis
- Built-in type encoder signal (90,000P)
  - MHE90K
- Connection connector No.

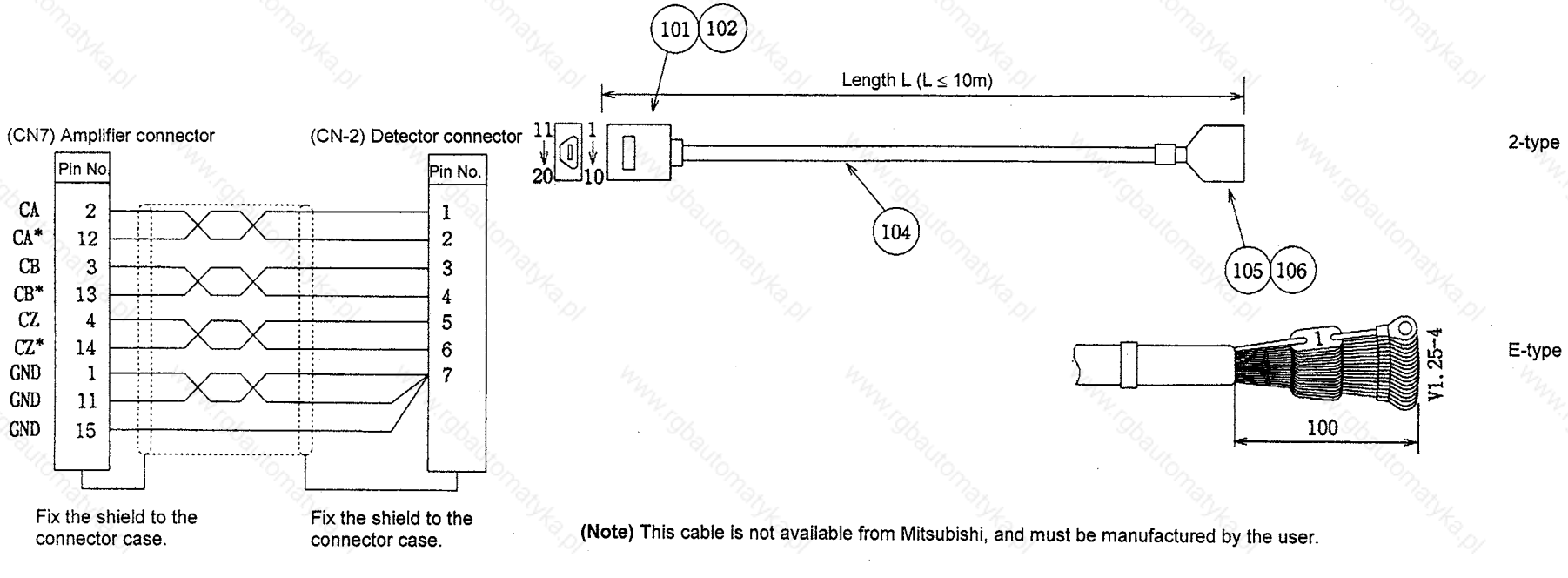

(Note) This cable is not available from Mitsubishi, and must be manufactured by the user.

● (7) CNP67A cable ●

Part No.	Part name	Abbr.	Model	Qty/type				
				E-type	2-type	3-type		
000								
101	Connector (shell)	CON	10320-52F0-008	2	2	2		
102	Connector (plug)	CON	10120-3000VE	2	2	2		
103								
104	Cable	SEN	F-DPEVSB TS-91026 (DDK)	1	1	1		
105	Cannon connector (angle)	CON	MS3108B20-29S			1		
106	Connector clamp	CON	MS3057-12A		1	1		
107								
108	Cannon connector (straight)	CON	MS3106B20-29S		1			

Cable name

CNP67A-□□-□

- Connector type
  - E : E-type (crimp terminal on lead end)
  - 2 : 2-type (cannon plug straight type)
  - 3 : 3-type (cannon plug L type)
- Axis No. (Axis 1 to 8)
  - 1~8 : Axis 1 ~ 8
- System No.
  - None : Axis 1 system
  - 2 : Axis 2 system
  - P : PLC axis
- Shaft type encoder signal
  - (90,000P + 1024P)
  - OSE90K + 1024
- Connection connector No.

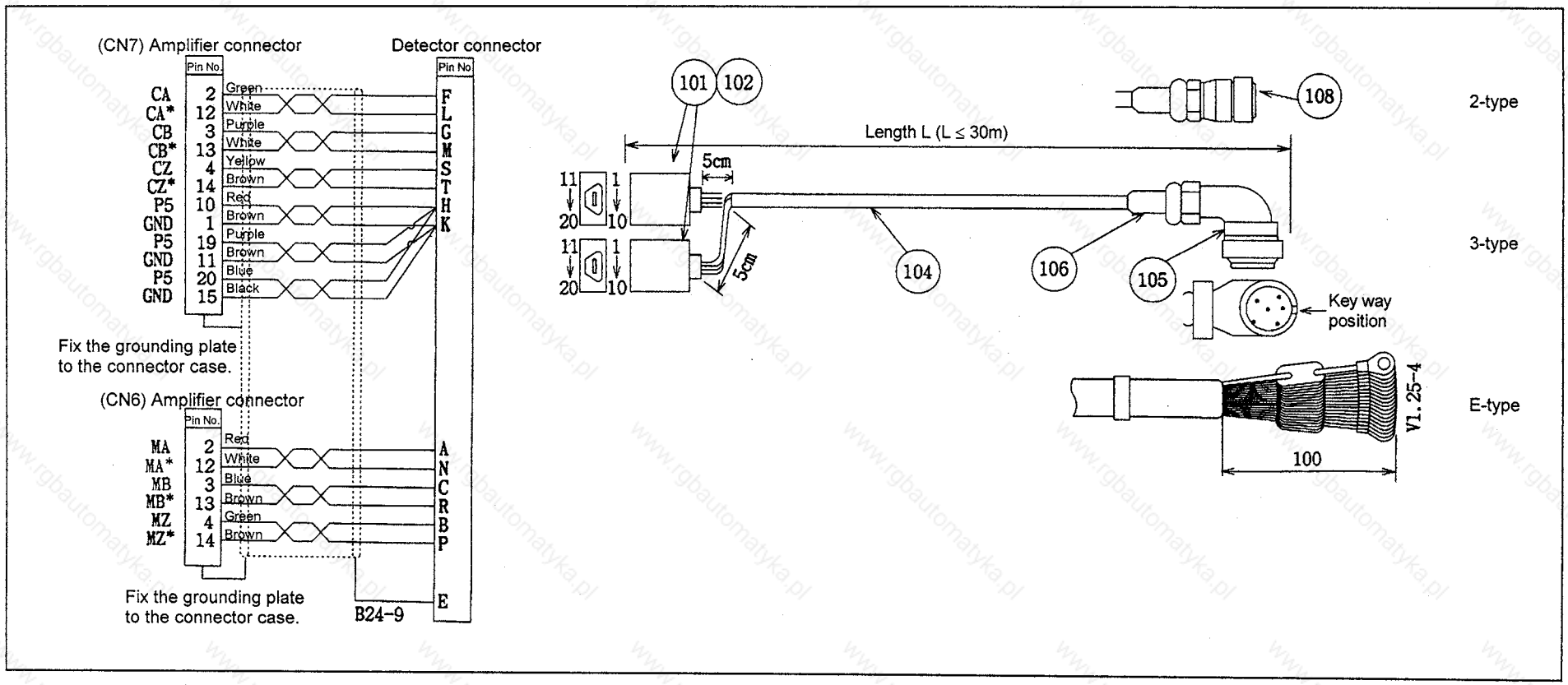

● (8) CNP71A cable ●

Part No.	Part name	Abbr.	Model	Qty/type				
000				E-type	2-type	3-type		
101	Connector (shell)	CON	10320-52F0-008	1	1	1		
102	Connector (plug)	CON	10120-3000VE	1	1	1		
103	Cannon connector (straight)	CON	MS3106B20-29S		1			
104	Cable	SEN	F-DPEVSB TS-91026 (DDK)	2	2			
105	Cannon connector (angle)	CON	MS3108B20-29S			1		
106	Connector clamp	CON	MS3057-12A		1	1		
107	Connector	CON	CDA-15P	1	1	1		
108	Contact	CON	CD-PC-111	6	6	6		
109	Case	CON	HDA-CTF	1	1	1		

Cable name

CNP71A–□□–□

- Connector type
  - E : E-type (crimp terminal on lead end)
  - 2 : 2-type (cannon plug straight type)
  - 3 : 3-type (cannon plug L type)
- Axis No. (Axis 1 to 8)
  - 1~8 : Axis 1 ~ 8
- System No.
  - None : Axis 1 system
  - 2 : Axis 2 system
  - P : PLC axis
- Shaft type encoder signal
  - (90,000P + 1024P)
  - OSE90K + 1024
- Connection connector No.

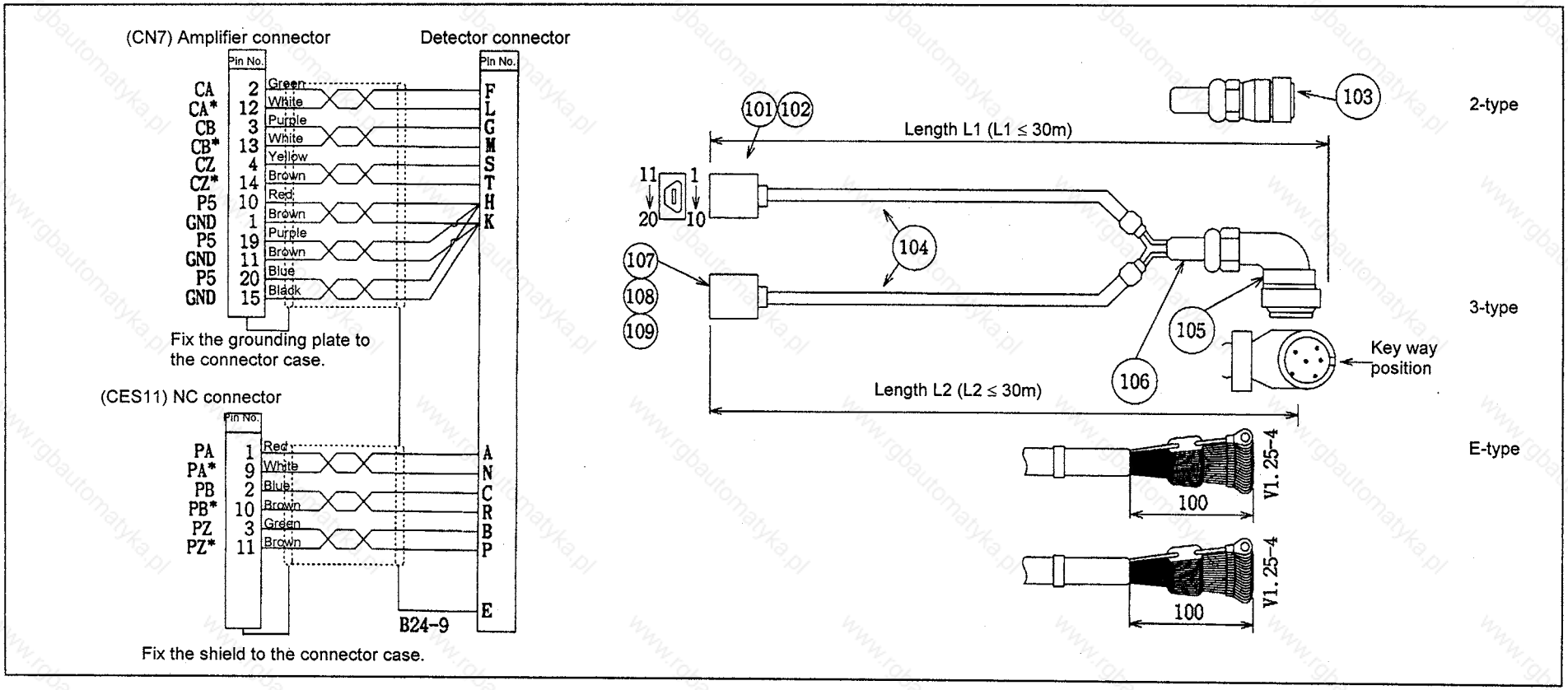

● (9) CNP71B cable ●

Part No.	Part name	Abbr.	Model	Qty/type				
000				E-type	2-type			
101	Connector (shell)	CON	10320-52F0-008	1	1			
102	Connector (plug)	CON	10120-3000VE	1	1			
103								
104	Cable	SEN	F-DPEVSB TS-91026 (DDK)	2	2			
105	Connector (housing)	CON	69176-020		1			
106	Connector (pin)	CON	48235-000		19			
107	Connector	CON	CDA-15P	1	1			
108	Contact	CON	CD-PC-111	6	6			
109	Case	CON	HDA-CTF	1	1			

Cable name

CNP71B–□□–□

- Connector type
  - E : E-type (crimp terminal on lead end)
  - 2 : 2-type (designated connector)
- Axis No. (Axis 1 to 8)
  - 1~8 : Axis 1 ~ 8
- System No.
  - None : Axis 1 system
  - 2 : Axis 2 system
  - P : PLC axis
- Built-in type encoder signal (90,000P + 1024P) MBE90K
- Connection connector No.

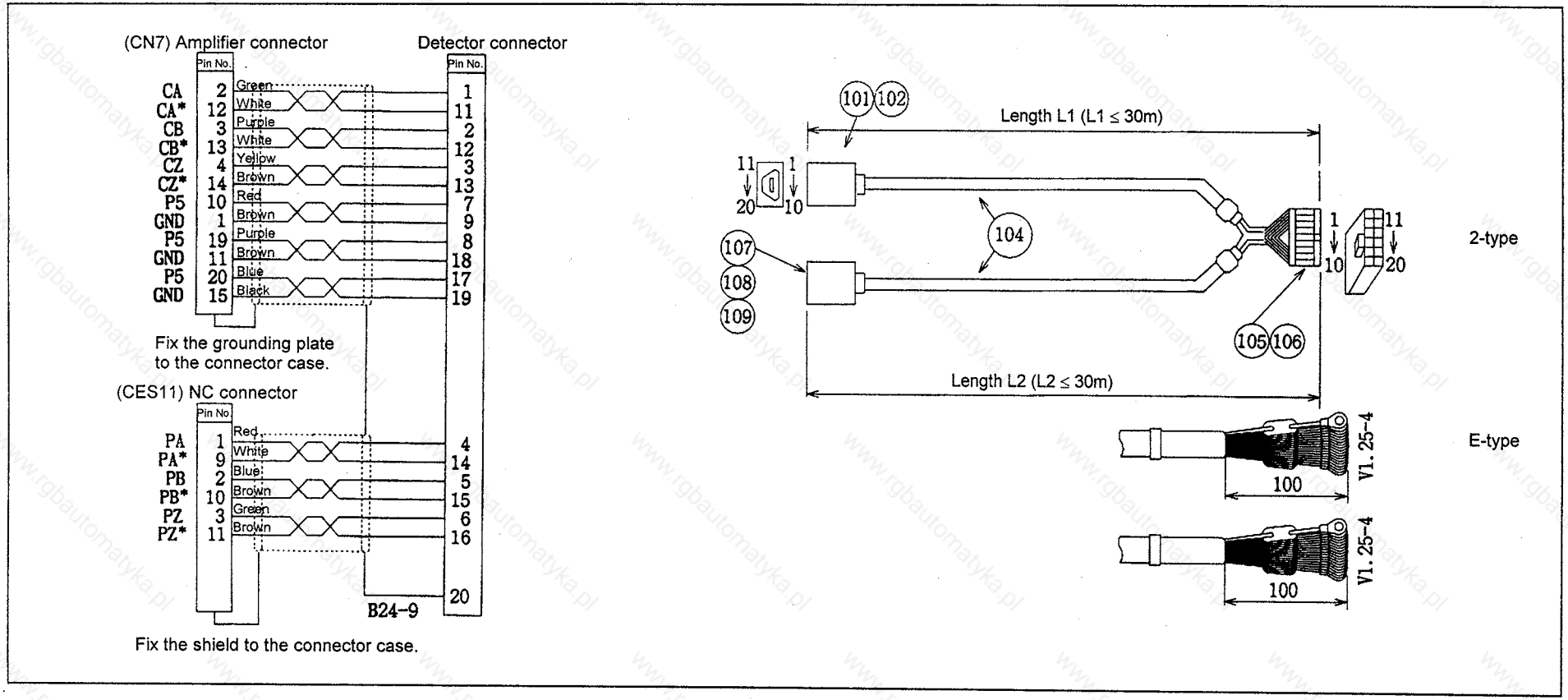

● (10) CNP71H cable ●

Part No.	Part name	Abbr.	Model	Qty/type				
				E-type	2-type			
000								
101	Connector (shell)	CON	10320-52F0-008	1	1			
102	Connector (plug)	CON	10120-3000VE	1	1			
103								
104	Cable	SEN	F-DPEVSB TS-91026 (DDK)	2	2			
105	Connector (housing)	CON	JAC-15P		2			
106	Connector (pin)	CON	J-SP1140		13			
107	Connector	CON	CDA-15P	1	1			
108	Contact	CON	CD-PC-111	6	6			
109	Case	CON	HDA-CTF	1	1			

Cable name

CNP71H–□□–□

- Connector type
  - E : E-type (crimp terminal on lead end)
  - 2 : 2-type (designated connector)
- Axis No. (Axis 1 to 8)
  - 1~8 : Axis 1 ~ 8
- System No.
  - None : Axis 1 system
  - 2 : Axis 2 system
  - P : PLC axis
- Built-in type encoder signal
  - (90,000P + 1024P) MHE90K
- Connection connector No.

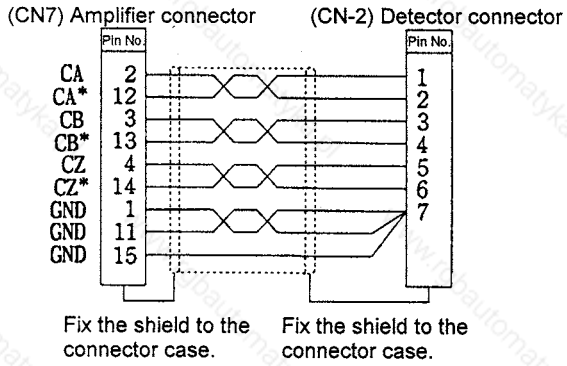

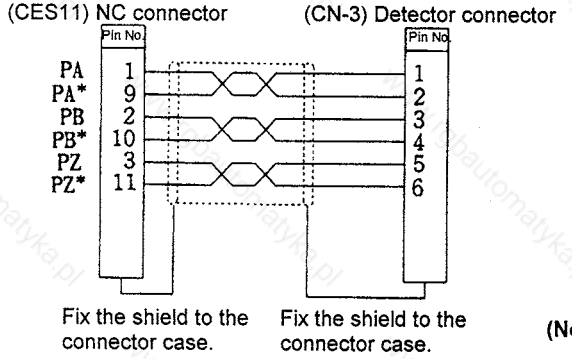

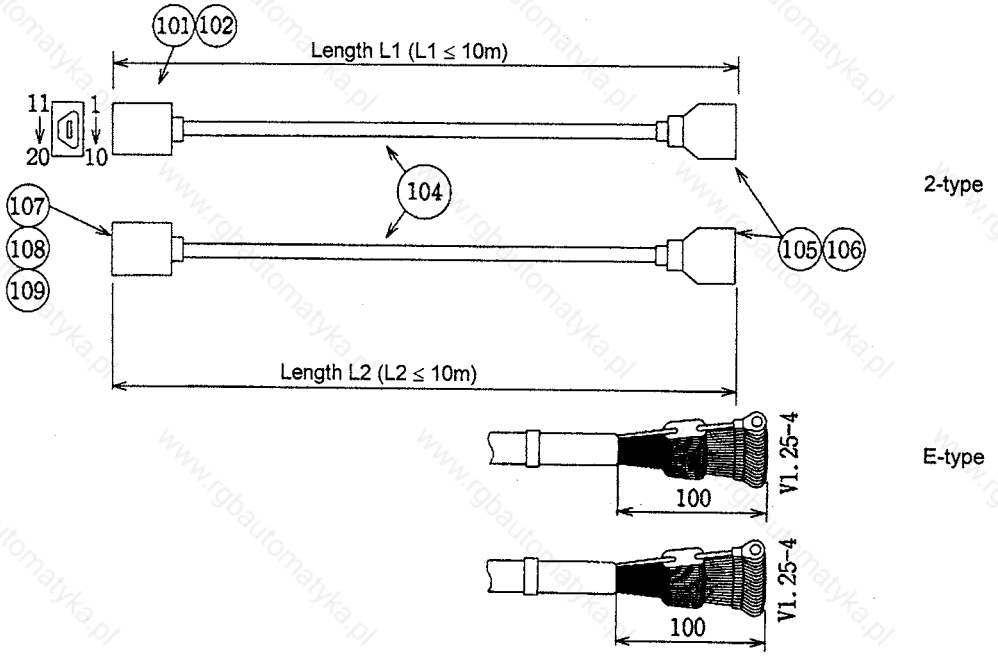

(Note) This cable is not available from Mitsubishi, and must be manufactured by the user.

● (11) CNP5H cable ●

Part No.	Part name	Abbr.	Model	Qty/type				
000				E-type	2-type			
101	Connector (shell)	CON	10320-52F0-008	1	1			
102	Connector (plug)	CON	10120-3000VE	1	1			
103								
104	Cable	SEN	F-DPEVSB TS-91026 (DDK)	1	1			
105	Connector (housing)	CON	JEC-9P		1			
106	Connector (pin)	CON	J-SP1140		7			

Cable name

CNP5H–□□–□

- Connector type
  - E : E-type (crimp terminal on lead end)
  - 2 : 2-type (designated connector)
- Axis No. (Axis 1 to 8)
  - 1~8 : Axis 1 ~ 8
- System No.
  - None : Axis 1 system
  - 2 : Axis 2 system
  - P : PLC axis
- Built-in type encoder signal
  - (180 wave) MHE90K
- Connection connector No.

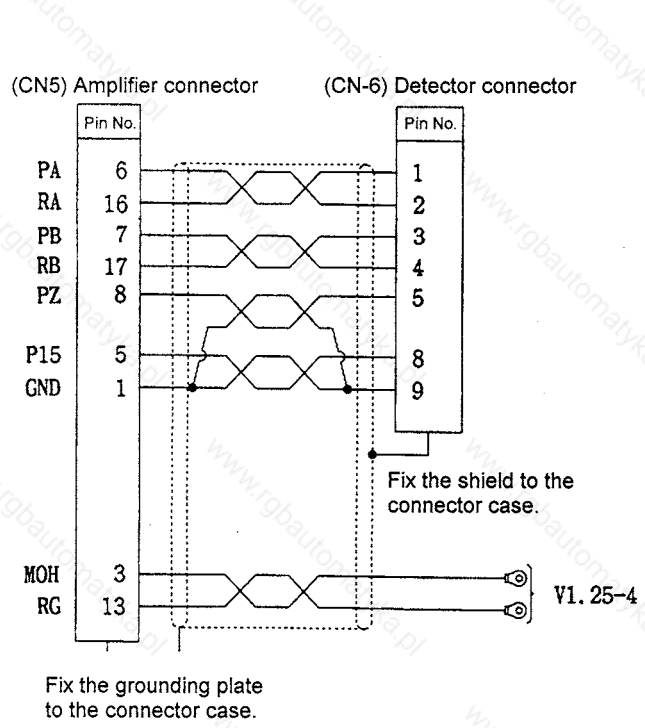

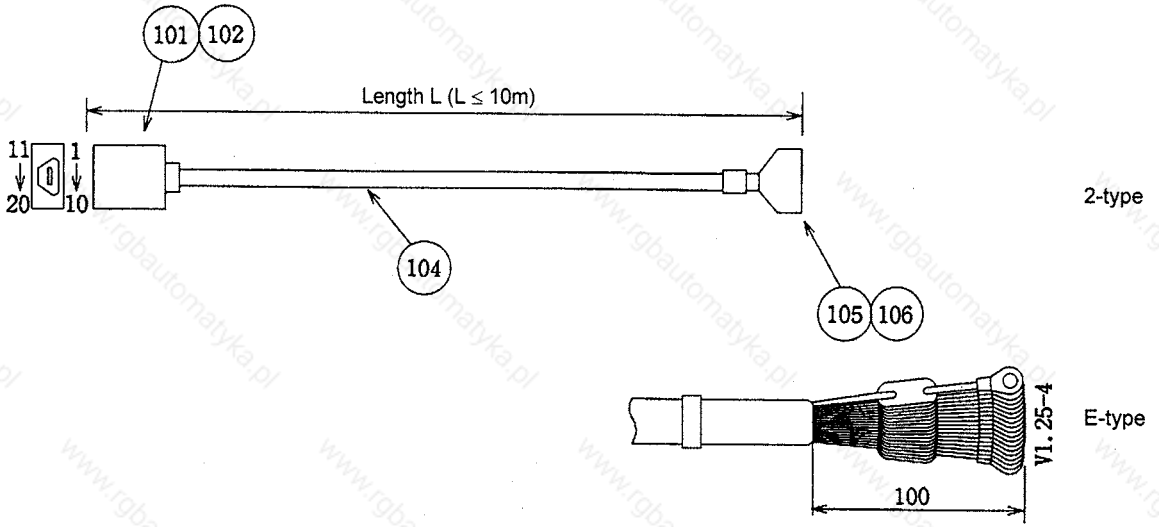

(Note) This cable is not available from Mitsubishi, and must be manufactured by the user.

● (12) CNP8H cable ●

Part No.	Part name	Abbr.	Model	Qty/type				
000								
101	Connector (shell)	CON	10320-52F0-008	1				
102	Connector (plug)	CON	10120-3000VE	1				
103								
104	Cable	SEN	F-DPEVSB TS-91026 (DDK)	1				
105	Connector	CON	CDA-15P	1				
106	Contact	CON	CD-PC-111	14				
107	Case	CON	HDA-CTF	1				

(Note) When using the 2-axis spindle, the required quantity of part Nos. (101) to (104) on the left will be two.

Cable name
CNP8

Connection connector No.

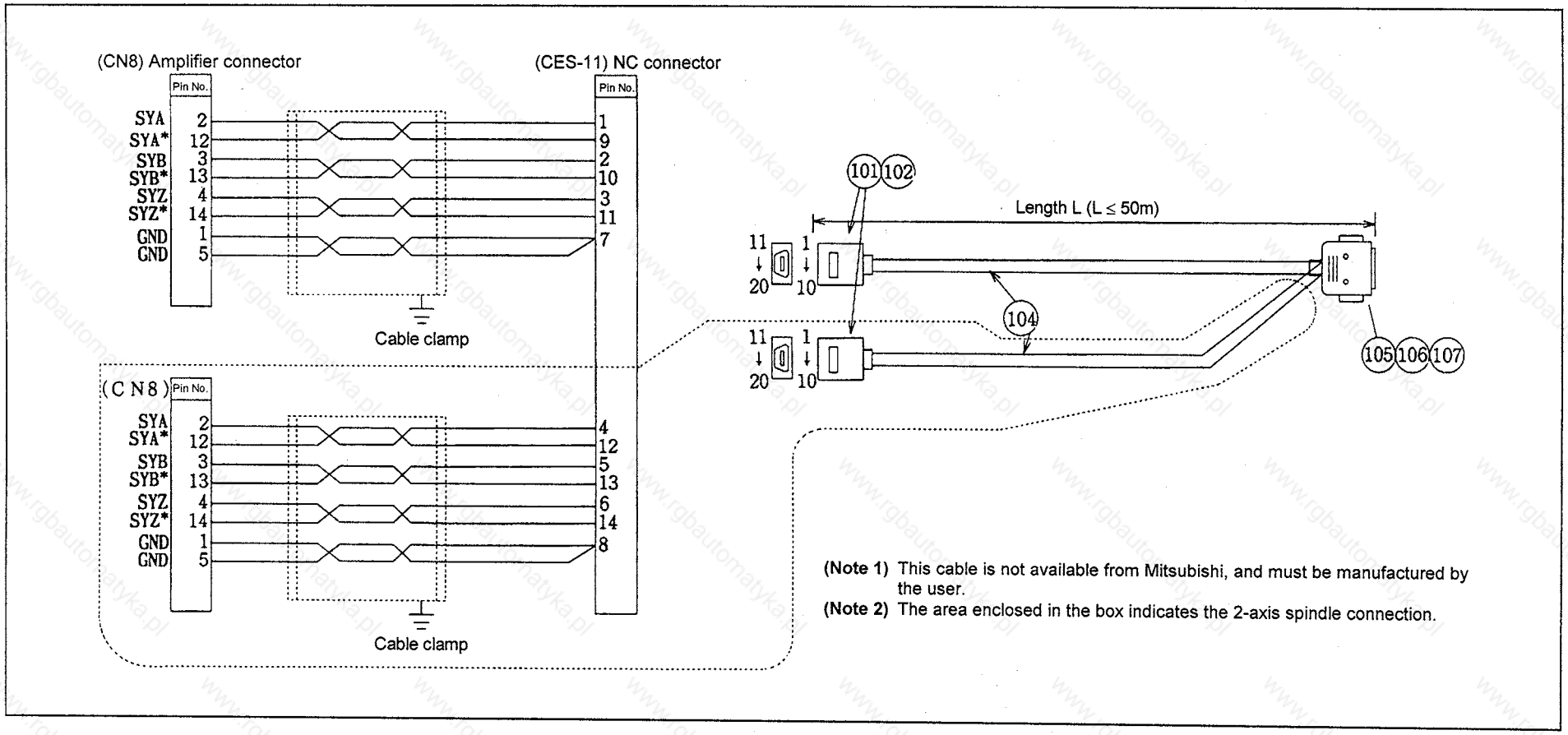

5.2.13 Cable assembly procedure (Excluding SH21 cable)

(1) Non-shield shell assembly procedure I

One-touch locking type

① 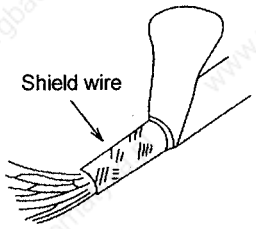	Peel the outer sheath so that the shield wires are exposed.
② 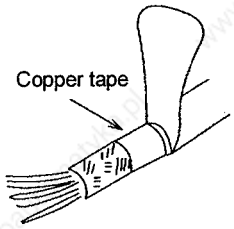	Wrap copper tape or vinyl tape around part of the shield wire section.
③ 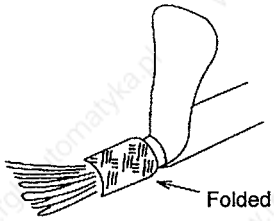	Fold the shield wire over the wrapped copper tape or vinyl tape.
④ 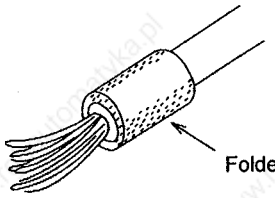	Cut off any excess sheath.
⑤ 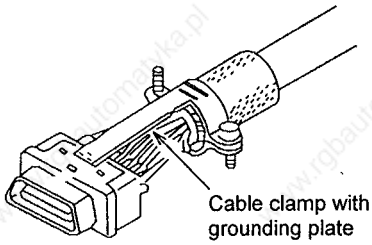	After connecting the connector and cable, mount the cable clamp approx. 1 to 2mm from the cable end, and tighten the screw until the cable clamp screw section face contacts closely. **Note.** Adjust the No. of copper tape windings in step ② so that the shield wire and clamp contact without looseness and so that the clamp's screw section face is closely contacted.

⑥ 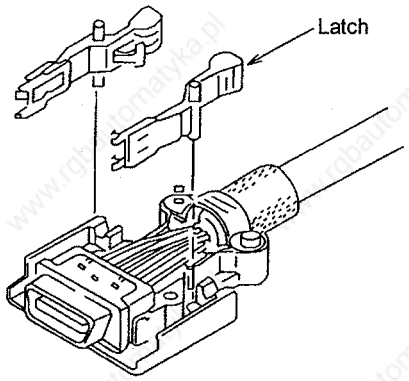	Store a connector and latch at the respective positions on one end of the shell. (The shell is reversible, so store on either side.) **Note.** Make sure that the cable does not rise up or exceed the shell's inner wall to prevent breakage of the cable.
⑦ 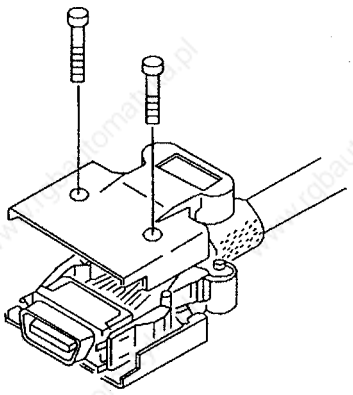	Set the other shell and tighten with a screw. **Note.** Recommended screw tightening torque: 3kgf•cm
⑧ 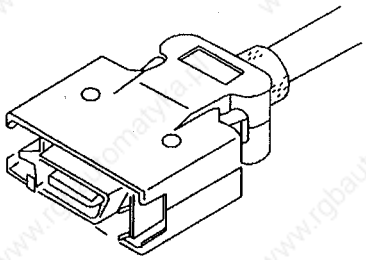	Completion Confirmation items : • There is no clearance on the shell engaging face. • The latch can be correctly opened and closed when moved with a finger.

(2) Non-shield shell assembly procedure II

Jack screw (screw lock) type

① 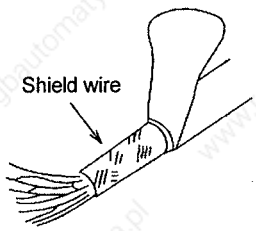	Peel the outer sheath so that the shield wires are exposed.
② 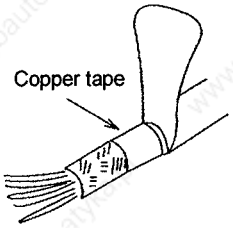	Wrap copper tape or vinyl tape around part of the shield wire section.
③ 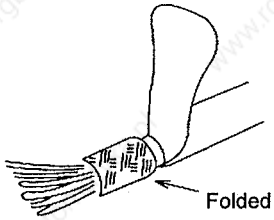	Fold the shield wire over the wrapped copper tape or vinyl tape.
④ 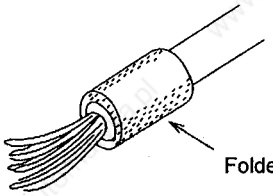	Cut off any excess sheath.
⑤ 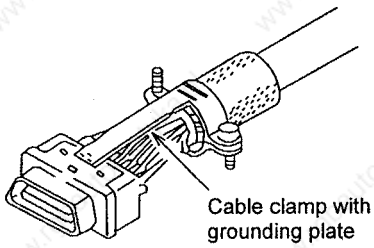	After connecting the connector and cable, mount the cable clamp approx. 1 to 2mm from the cable end, and tighten the screw until the cable clamp screw section face contacts closely. **Note.** Adjust the No. of copper tape windings in step ② so that the shield wire and clamp contact without looseness and so that the clamp's screw section face is closely contacted.

⑥ 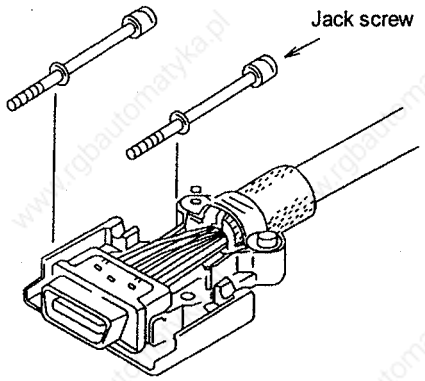	Store a connector and jack screw at the respective positions on one end of the shell. (The shell is reversible, so store on either side.) **Note.** Make sure that the cable does not rise up or exceed the shell's inner wall to prevent breakage of the cable.
⑦ 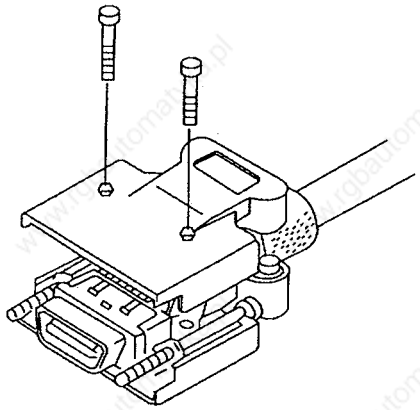	Set the other shell and tighten with a screw. **Note.** Recommended screw tightening torque: 3kgf•cm
⑧ 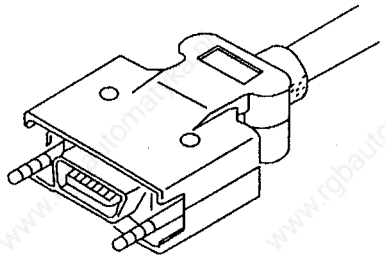	Completion Confirmation items : • There is no clearance on the shell engaging face.

6. Outline Drawing

6.1 Outline list

Outline

(1) Unit outline

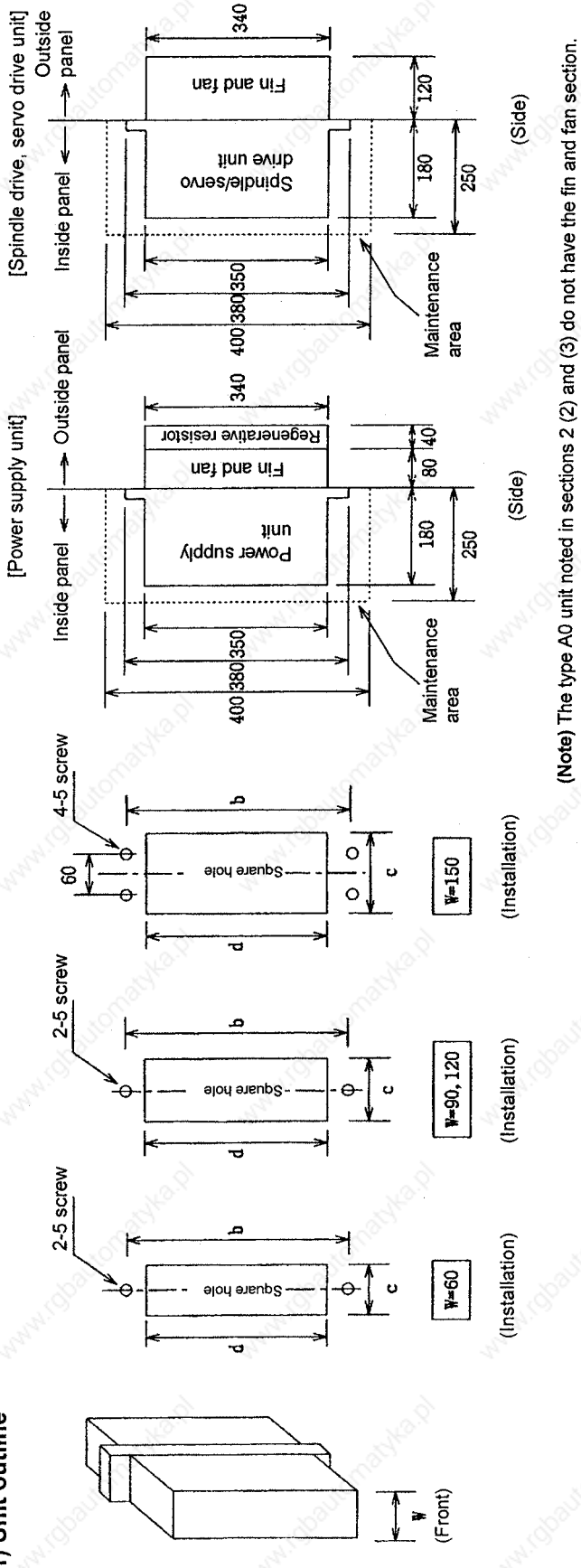

(Note) The type A0 unit noted in sections 2 (2) and (3) do not have the fin and fan section.

	Power supply unit				Spindle drive unit				Servo drive unit					
									1-axis			2-axis		
Capacity	~ 7.5kW	11kW	15 ~ 18.5kW	22 ~ 37kW	~ 3.7kW	5.5 ~ 11kW	15 ~ 18.5kW	22 ~ 30kW	~ 3.5kW	4.5kW	7 ~ 9kW	11 ~ 15kW	~ 2kW × 2	~ 4.5kW+3.5kW
W	60	90	120	150	60	90	120	150	60	90	120	150	60	90
b	360	360	360	360	360	360	360	360	360	360	360	360	360	360
c	52	82	112	142	52	82	112	142	52	82	112	142	52	82
d	342	342	342	342	342	342	342	342	342	342	342	342	342	342

6.2 Power supply unit

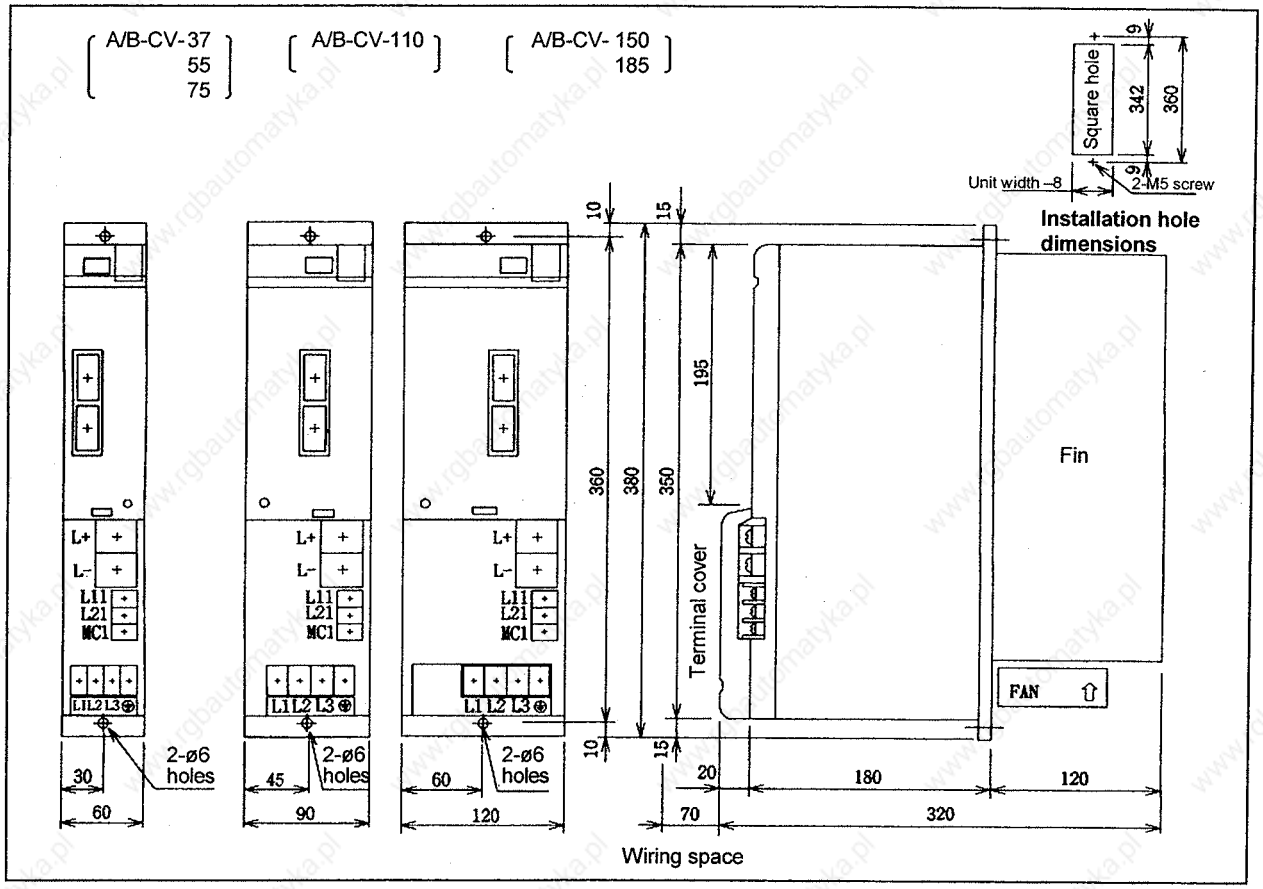

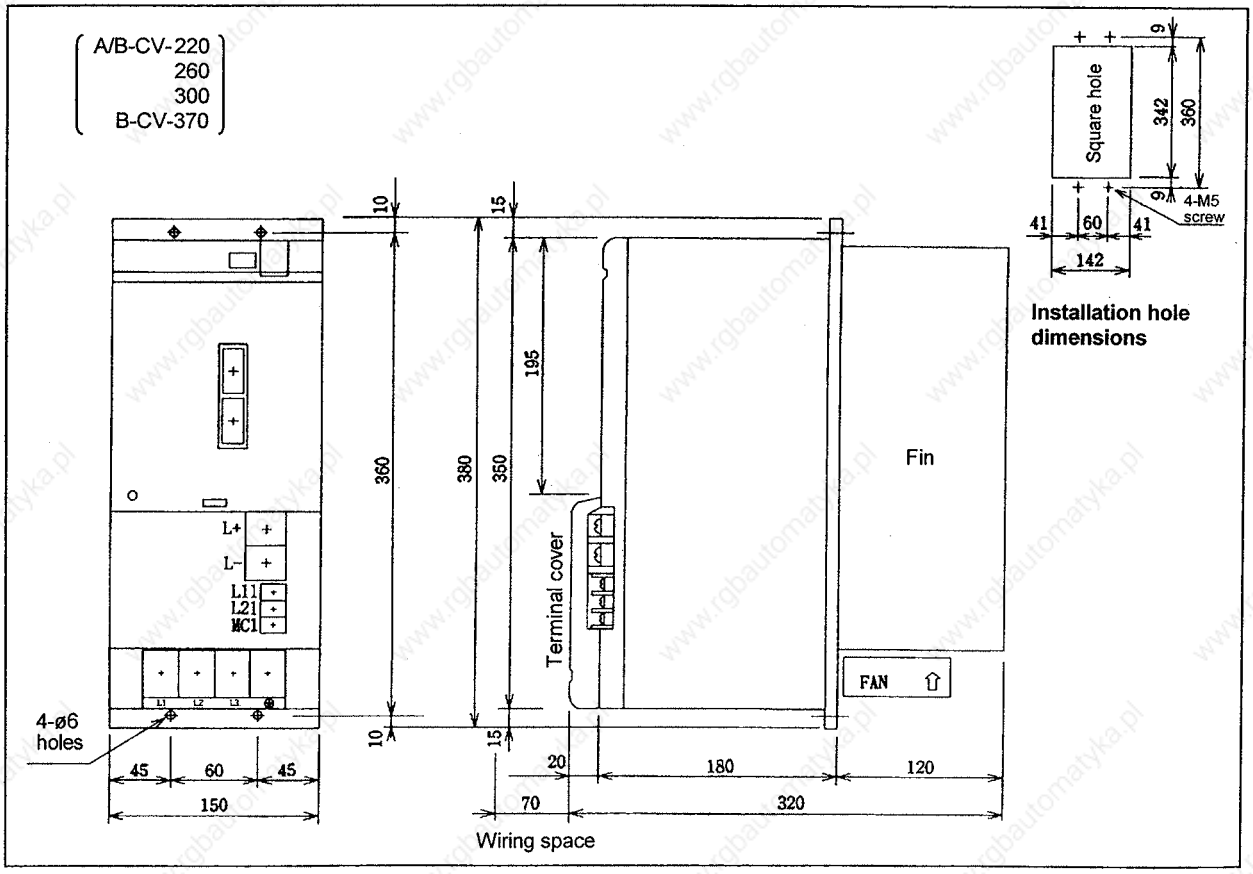

6.3 1-axis servo drive unit

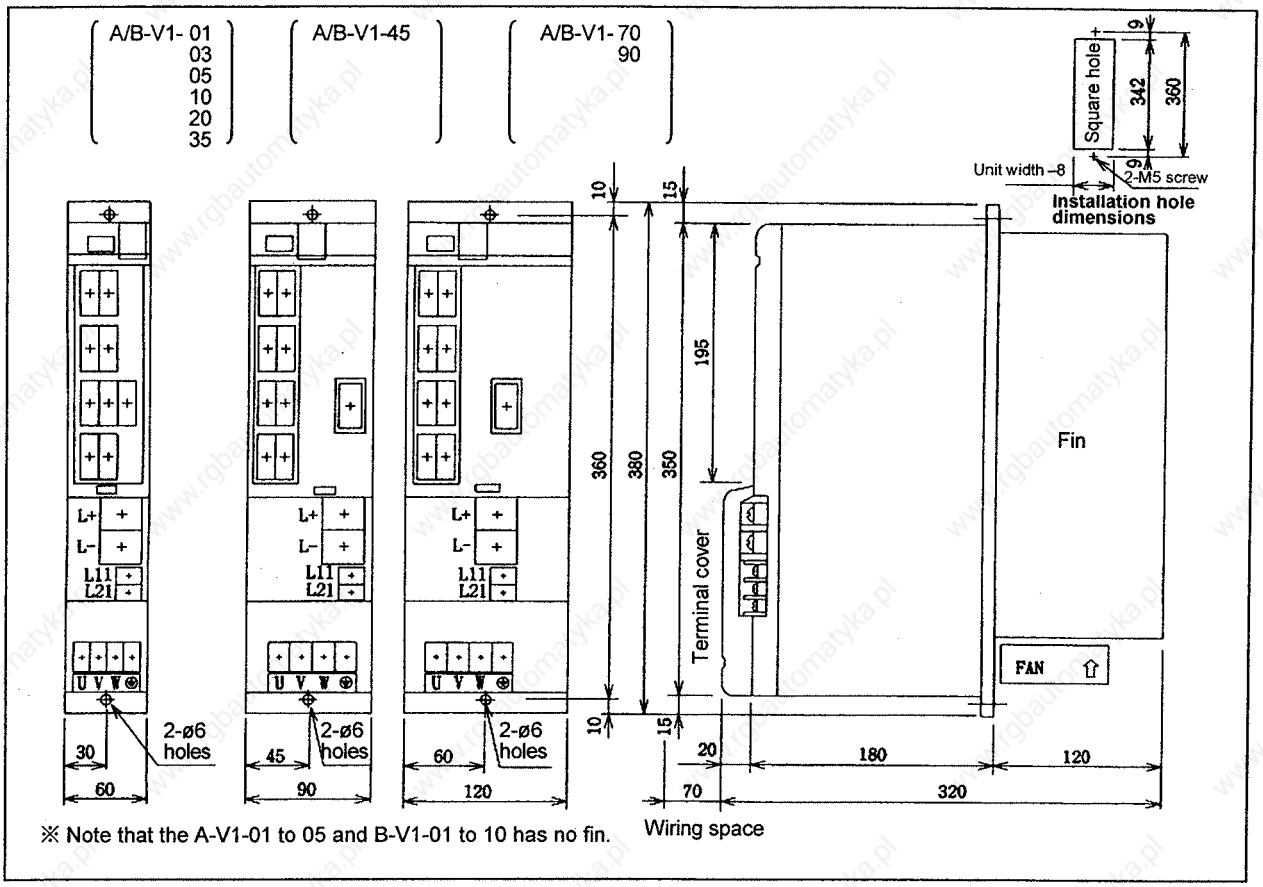

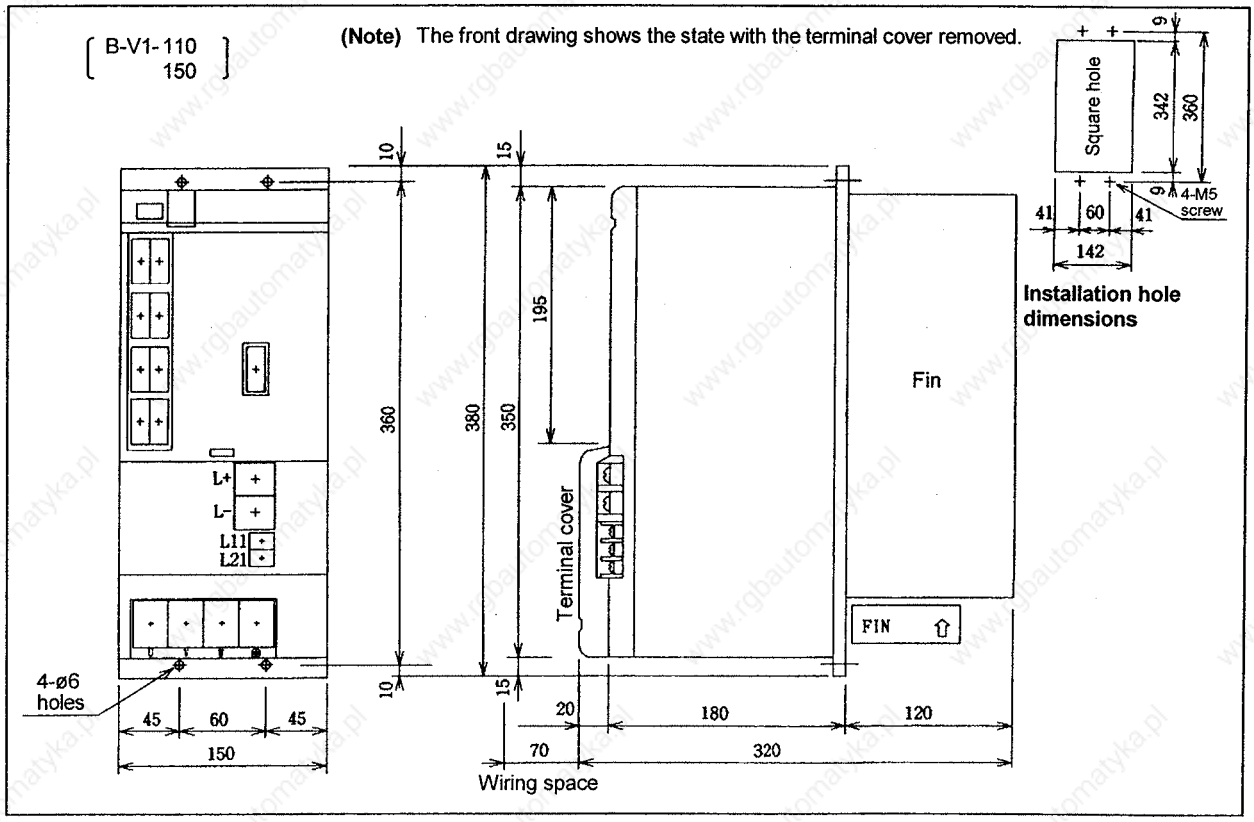

6.4 2-axis servo drive unit

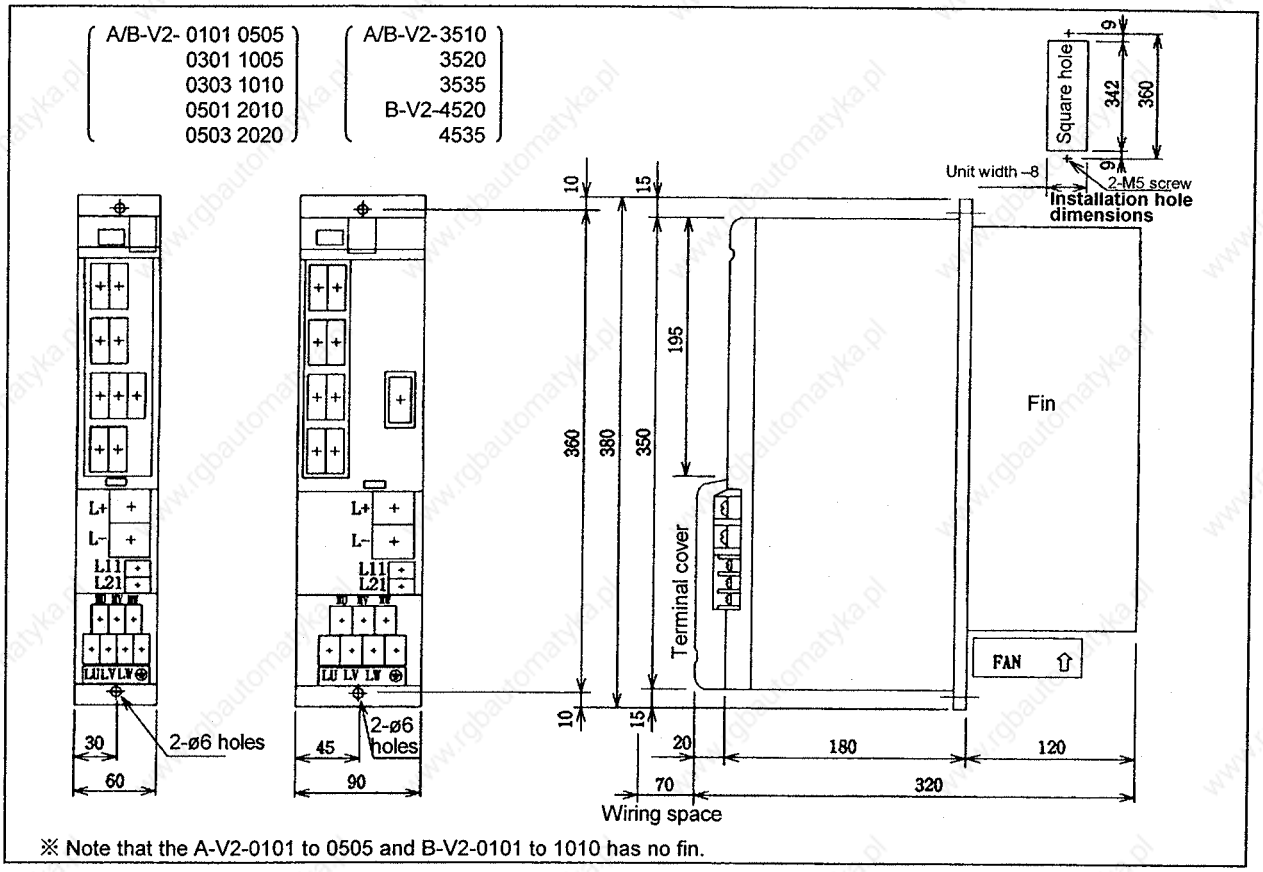

※ Note that the A-V2-0101 to 0505 and B-V2-0101 to 1010 has no fin.

6.5 Spindle drive unit

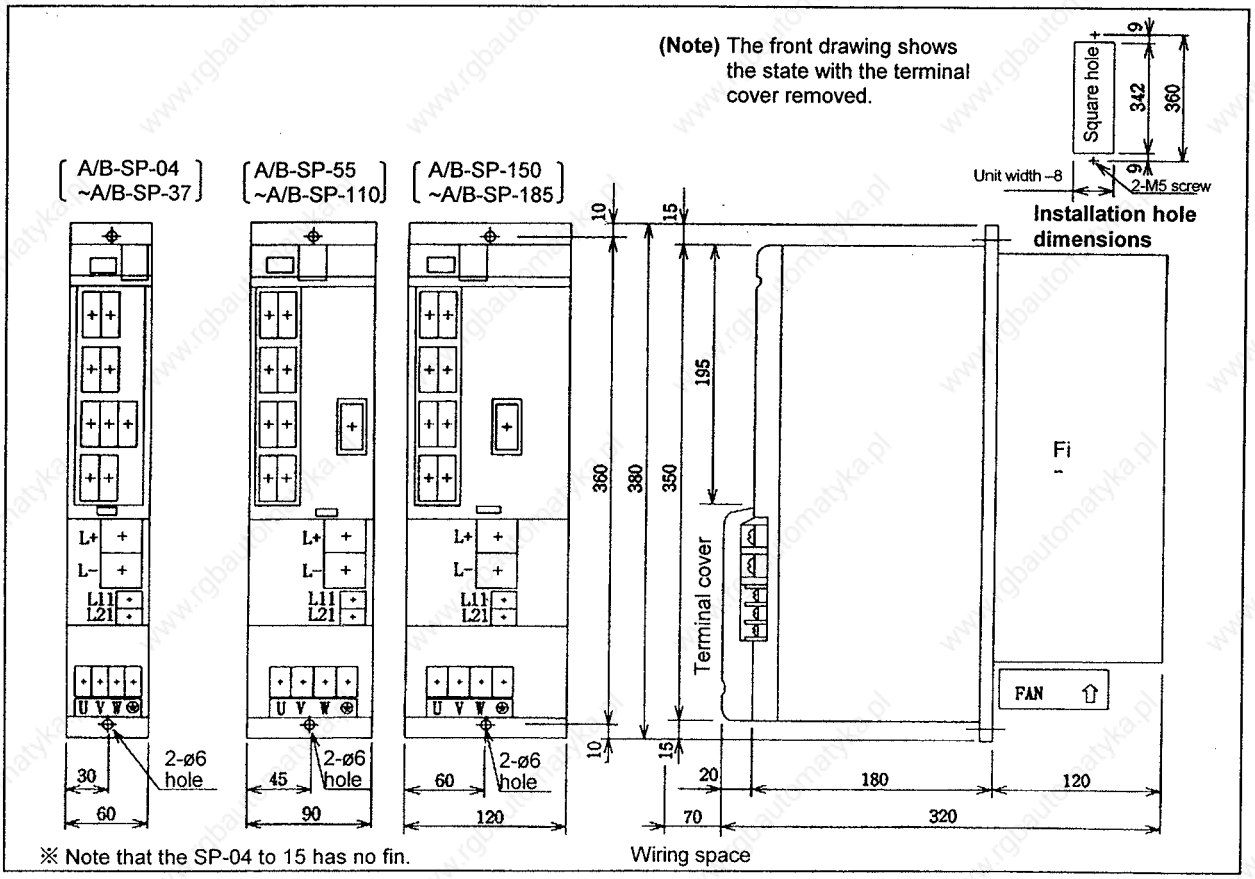

※ Note that the SP-04 to 15 has no fin.

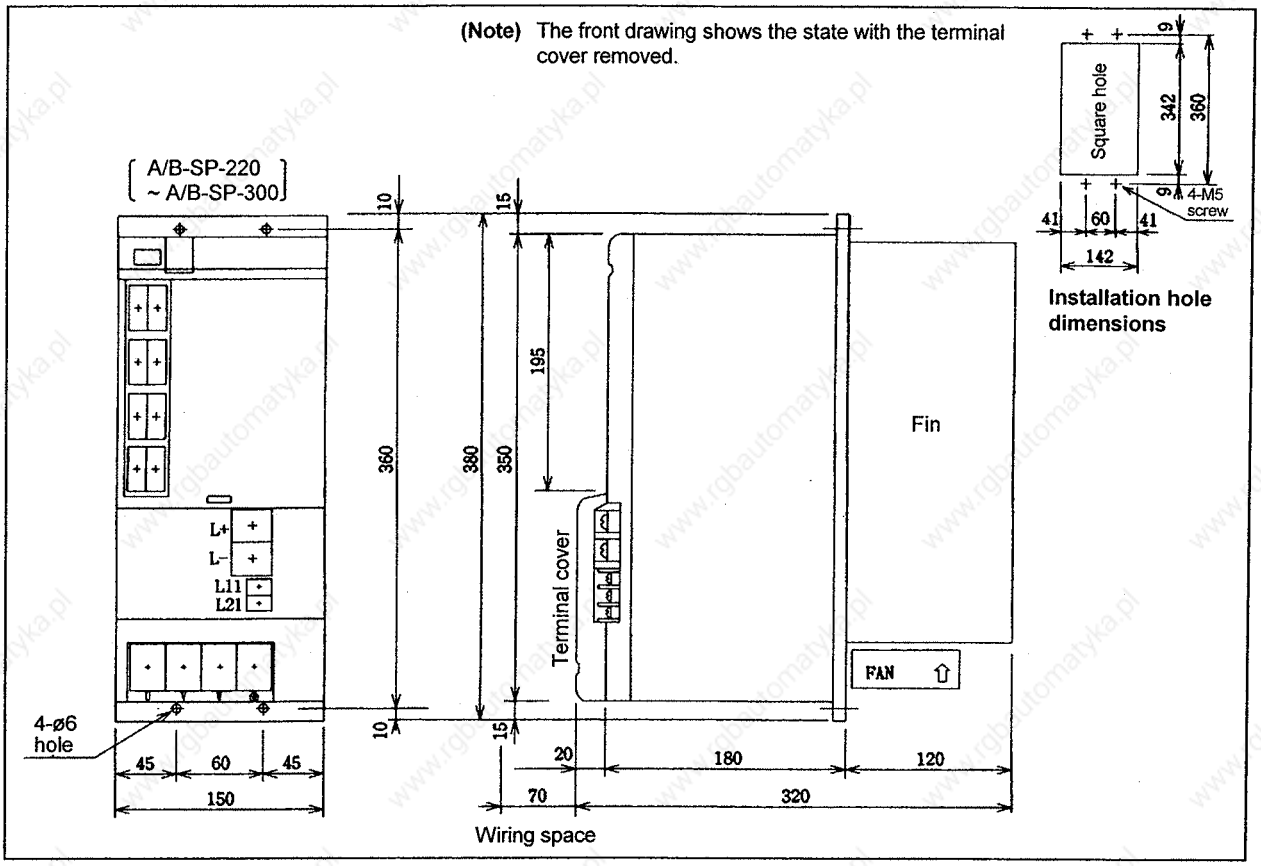

6.6 Battery unit

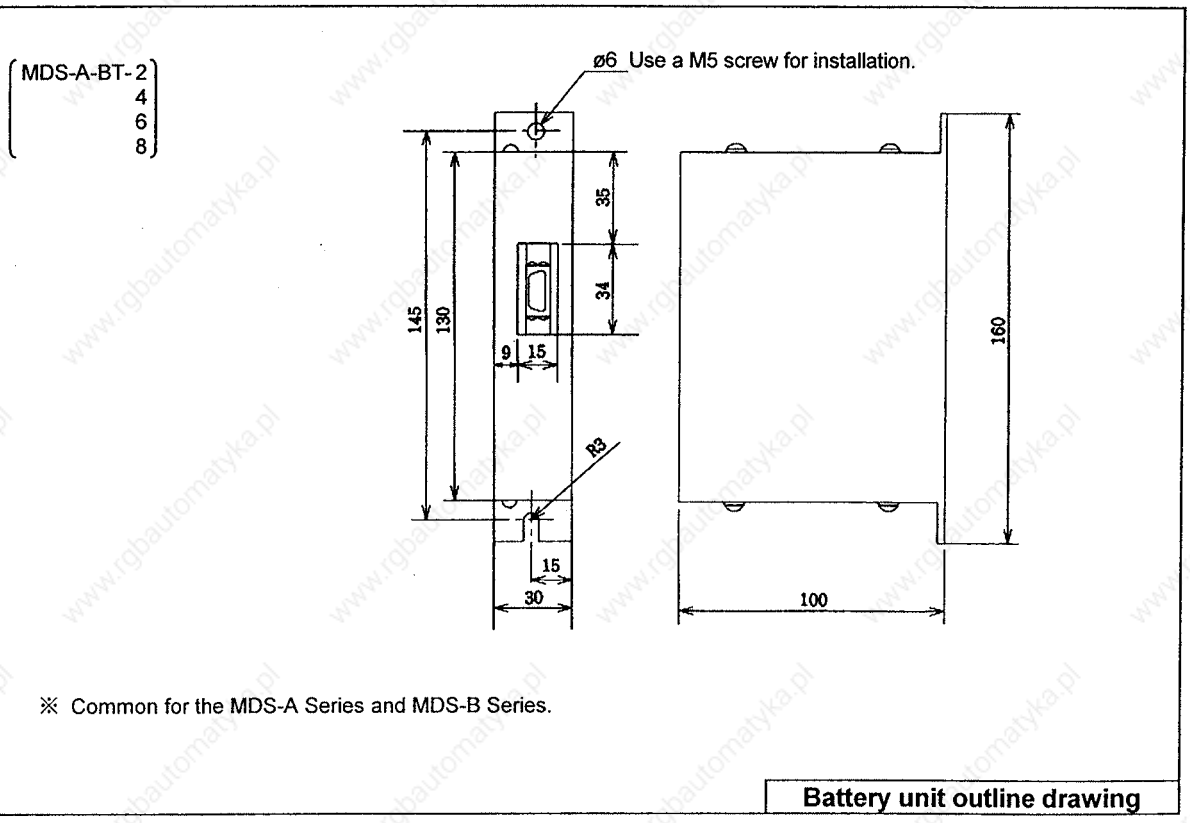

※ Common for the MDS-A Series and MDS-B Series.

Battery unit outline drawing

6.7 AC reactor

(1) Conventional part (production terminated)

AC reactor outline drawing

(1) For 30kW or less

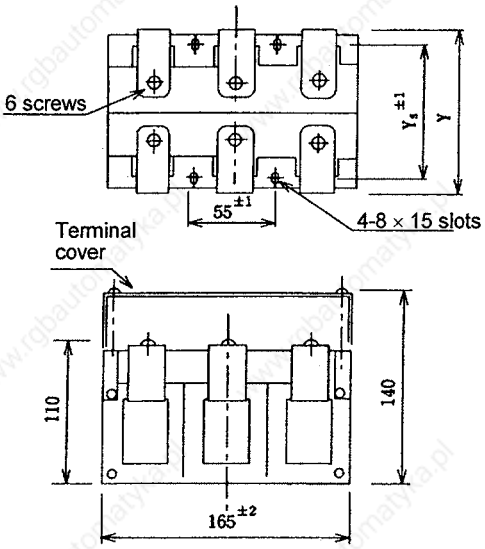

ACL model	Corresponding power supply unit	Ys	Y	Weight (kg)	Screw
A-AL BKO-NC6851H01	A-CV-37, A-CV-55, A-CV-75	82	130	3.6	M5
BKO-NC6851H02	A-CV-110	75	130	3.0	
BKO-NC6851H03	A-CV-150, A-CV-185	105	140	5.2	M6
BKO-NC6851H04	A-CV-220, A-CV-260, A-CV-300	110	150	6.0	

(2) European Standards compliant part

AC reactor outline drawing

(1) For 30kW or less

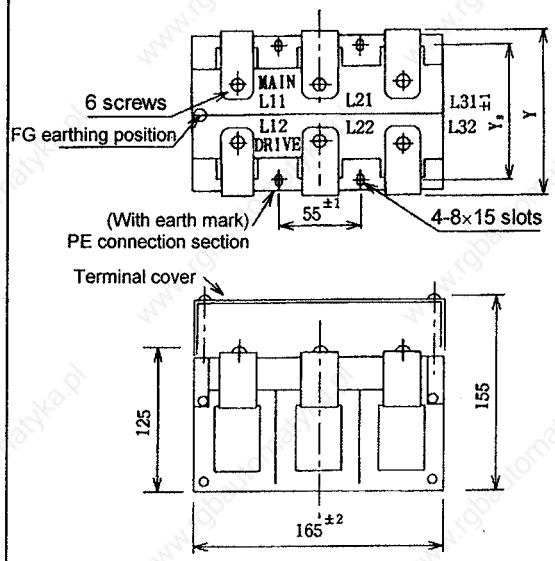

ACL model	Corresponding power supply unit	Ys	Y	Weight (kg)	Screw
B-AL-7.5K	A/B-CV-37, A/B-CV-55, A/B-CV-75	82	130	3.6	M5
B-AL-11K	A/B-CV-110	75	130	3.0	
B-AL-18.5K	A/B-CV-150, A/B-CV-185	105	140	5.2	M6
B-AL-30K	A/B-CV-220, A/B-CV-260, A/B-CV-300	110	150	6.0	

AC reactor outline drawing

(2) 37kW

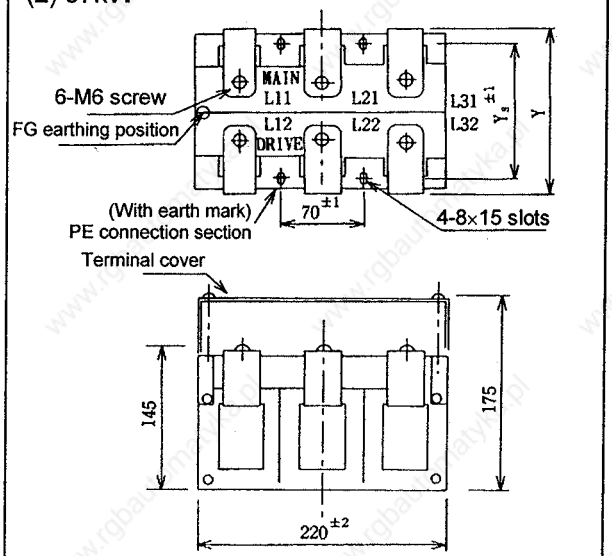

ACL model	Corresponding power supply unit	Ys	Y	Weight (kg)
B-AL-37K	B-CV-370	110	150	10.0

Note 1. This AC reactor has a PE (protection earthing) terminal for electric shock prevention and an FG (function earthing) terminal for noise measures. Observe the following cautions for treating each terminal.

① PE terminal (⏚)

a. When AC reactor installation side is PE
Install the AC reactor unit with screws (bolts) in all four installation holes.
Always insert a loosening-prevention washer and spring washer in the screw (bolt) used for the ⏚ mark installation hole, and tighten the screw.

b. When AC reactor installation side is not PE
Install the AC reactor unit with screws (bolts) in all four installation holes.
Always insert a loosening-prevention washer and spring washer and tighten the screw together with the earthing wire (PE) crimp terminal at the ⏚ mark installation hole.
The earthing wire used is the same type as the earthing wire connected to the power supply unit.

② FG terminal (FG)

Screw the function earthing wire crimp terminal at the terminal marked as "FG" on the top of the AC reactor (terminal block).
(With this treatment, the built-in filter's earth will be directly connected to the earth, and the noise withstand level will be improved.)

* Function earthing wire:
This is an earthing wire not used for protection earthing. Thus, do not use a green/yellow spiral wire.

Note 2. The dimensions of the terminal cover are as shown on the right. When separately manufacturing a cover, refer to the dimensions on the right.

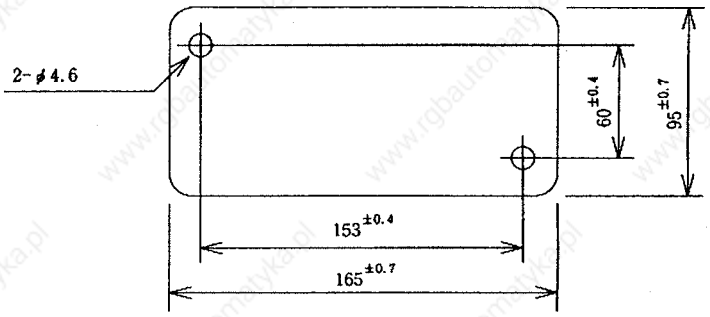

6.8 Dynamic brake unit

(Unit : mm)

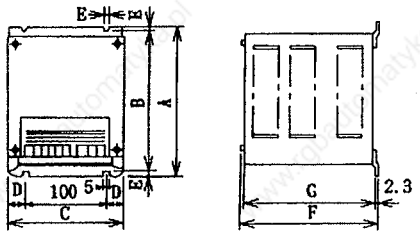

Model	MDS-B-DBU-150
A	200
B	190
C	140
D	20
E	5
F	200
G	193.8
Weight (kg)	2
Applicable servo amplifier	V1-110/150

6.9 Contactor

Refer to the section 8.4 Selection of AC reactor, contactor and NFB.

6.10 NFB

Refer to the section 8.4 Selection of AC reactor, contactor and NFB.

7. Heating Value

1) Power supply unit

Model	Heating value (W)	
	A series	B series
CV-37	55	55
CV-55	65	65
CV-75	80	80
CV-110	130	125
CV-150	160	155
CV-185	200	195
CV-220	220	210
CV-260	270	260
CV-300	330	320
CV-370	–	400

2) Spindle drive unit

Model	Heating value (W)	
	A series	B series
SP-04	* 30	* 30
SP-075	* 45	* 40
SP-15	* 55	* 50
SP-22	70	70
SP-37	80	80
SP-55	110	110
SP-75	140	140
SP-110	190	185
SP-150	250	240
SP-185	360	350
SP-220	390	375
SP-260	510	495
SP-300	650	635

3) 1-axis servo drive unit

Model	Heating value (W)	
	A series	B series
V1-01	* 20	* 20
V1-03	* 25	* 25
V1-05	* 35	* 35
V1-10	55	* 50
V1-20	80	80
V1-35	115	115
V1-45	165	160
V1-70	255	245
V1-90	295	285
V1-110	–	400
V1-150	–	550

4) 2-axis servo drive unit

Model	Heating value (W)	
	A series	B series
V2-0101	40	35
V2-0303	45	40
V2-0503	60	50
V2-0505	70	60
V2-1005	90	75
V2-1010	110	90
V2-2010	140	135
V2-2020	160	155
V2-3510	170	165
V2-3520	190	185
V2-3535	230	225
V2-4520	–	230
V2-4535	–	265

(Note 1) The heating value for the spindle drive unit is for during continuous rated output; and for the servo drive unit is for during rated output.

(Note 2) For the total heating value for the amplifier, add the heating value for the corresponding unit above that is mounted on the actual machine.

Example) When mounted unit is B-CV-185, B-SP-110, B-V1-35, B-V2-2020
Total amplifier heating value (W) = 195 + 185 + 115 + 155 = 650 (W)

(Note 3) When using the fully closed installation method, the heating value outside the panel should follow equation ④ below.

	MDS-A Series	MDS-B Series
(1) Power supply unit	Heating value outside panel = (A-CV heating value –17) × 0.8	Heating value outside panel = (B-CV heating value –15) × 0.85
(2) Spindle drive unit	Heating value outside panel = (A-SP heating value –20) × 0.8	Heating value outside panel = (B-SP heating value –20) × 0.85 ..... ④
(3) 1-axis servo drive unit	Heating value outside panel = (A-V1 heating value –16) × 0.8	Heating value outside panel = (B-V1 heating value –15) × 0.85
(4) 2-axis servo drive unit	Heating value outside panel = (A-V2 heating value –28) × 0.8	Heating value outside panel = (B-V2 heating value –20) × 0.85

However, the units marked with * above are types without fins, so the heating value inside the panel will be applied instead of equation ④.

(Note 4) When designing the panel for the fully closed installation, consider the actual load ratio as the heating value inside the servo drive unit panel, and use the following equation.

Heating value inside servo drive unit panel (considering load ratio)
= heating value inside panel obtained with equation ④ × 0.5

(However, this excludes the power supply unit and spindle drive unit.)
If it is clear that the load ratio is larger than 0.5, substitute that load ratio for (× 0.5) in the above equation.

Example) If the mounted servo drive unit is B-V1-35:
Heating value inside panel (during rated output)
= 115 – (115 – 15) × 0.85 = 30 (W)
Thus,
Heating value inside panel (considering load ratio)
= 30 × 0.5 = 15 (W).

(Note 5) Due to the structure, heat will tend to accumulate that the top of each unit. Thus, install a fan in the distribution panel to mix the heat at the top of each unit.

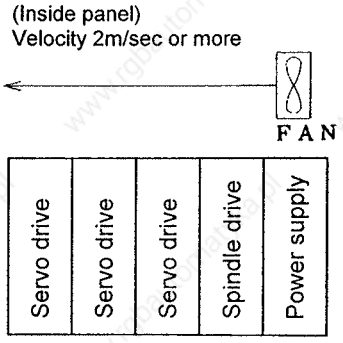

8. Selection of Capacity

8.1 Selection of power supply unit

The selection will differ according to the following standards.

1) When using 1-axis servomotor

Power supply unit capacity > Σ (Spindle motor output) + (Servomotor output)	..... ①

2) When using 2 or more axes servomotor

Power supply unit capacity > Σ (Spindle motor output) + 0.7 × Σ (Servomotor output)	..... ②

(Note 1) Σ (spindle motor output) is the total of the spindle motor's 30 minute rated output (kW).
Σ (servomotor output) is the total of the servomotor rated output (kW).
Note that, the motor output and drive unit capacity will not always match (for example, servo drive unit for servomotor HA103=2kW is V1-35=3.5kW). Thus, substitute the motor rated output instead of the drive unit capacity in the spindle motor output and servomotor output items in equations ① and ② above.
Furthermore, the spindle motor is used with differing outputs during the acceleration and constant speeds, so in this case, substitute the larger output in the spindle motor output item.

(Note 2) The power supply unit capacity is the minimum line up capacity that establishes equations ① and ②.

Example 1) If the value obtained on the right side of equations ① and ② is 10kW, the power supply unit capacity will be 11kW (CV-110)

Example 2) If the value obtained on the right side of equations ① and ② is 23kW, the power supply unit capacity will be 26kW (CV-260)

(Note 3) With the power regenerative type power supply CV, if the value obtained on the right of equations ① and ② is suppressed to less than 0.5kW more than line up CV unit capacity, the excessive amount can be ignored when selecting the CV unit capacity.
For capacities exceeding 22kW, excessive values can be ignored when selecting the CV unit capacity.

Example 1) If the value obtained on the right sides of equations ① and ② is 15.5kW, the power supply unit capacity will be 15kW.

Example 2) If the value obtained on the right sides of equations ① and ② is 15.6kW, the power supply unit capacity will be 18.5kW.

Example 3) If the value obtained on the right sides of equations ① and ② is 22.9kW, the power supply unit capacity will be 22kW.

Example 4) If the value obtained on the right sides of equations ① and ② is 23.1kW, the power supply unit capacity will be 26kW.

With the resistance regeneration type power supply CR, when the capacity is 3.7kW to 9kW, if the value obtained on the right of equations ① and ② is suppressed to less than 0.5kW more than the line up CR unit capacity, the excessive amount can be ignored.

(Note 4) If the value obtained on the right sides of equations ① and ② is larger than 31kW, there is no corresponding power supply unit. Thus,

<1> When Σ (spindle motor output) < 31kW

Power supply unit (No. 1) capacity > Σ (spindle motor output)

Power supply unit (No. 2) capacity > k × Σ (servomotor output)

* However, select two power supply units so that coefficient k is k=1 when the servomotor has one axis; and k=0.7 when the servomotor has two or more axes.

<2> When Σ (spindle motor output) > 38kW

Power supply unit (No.1) capacity > Σ (spindle motor output 1)

* Where, Σ (spindle motor output 1) is the total of the spindle motor output that is 38kW or less.

Power supply unit (No. 2) capacity > Σ (spindle motor output 2) + K × Σ (servomotor output)

* Where, two power supply units for Σ (spindle motor output 2) so that the spindle motor output coefficient k that is not added to the power supply unit (No. 1) is k=1 when the servomotor has one axis and k=0.7 when the servomotor has two or more axes.

<3> If the value obtained on the right sides of equations ① and ② is more than 76kW, three or more power supply units will be required. However, even in this case, the same selection method as <2> is used.

(Note 5) When the servomotor has two or more axes, the value is calculated as k = 0.7. However, if the capacity of the power supply unit determined by the calculation is smaller than the largest output of the servomotor being used, select a power supply unit capacity that is the same as the largest servomotor output.

8.2 Selection of power supply capacity

The power supply capacity reference values for the power supply unit selected in section 8.1 are as follow:

Power regeneration type power supply unit	A/B-CV-37	A/B-CV-55	A/B-CV-75	A/B-CV-110	A/B-CV-150	A/B-CV-185	A/B-CV-220	A/B-CV-260	A/B-CV-300	B-CV-370
Power supply capacity reference values (kVA)	7	9	12	17	23	28	33	37	44	54

Resistance regeneration type power supply unit	A-CR-10/15	A-CR-22	A-CR-37	A-CR-55	A-CR-75	A-CR-90
Power supply capacity reference values (kVA)	3	4	7	9	12	17

The actually required power supply capacity is calculated with the following equation based on the above power supply capacity reference values.

$$\text{Power supply capacity (kVA)} = \frac{\text{Right side value (kW) obtained in equations ① and ② in section 8.1}}{\text{Power supply unit capacity (kW) selected from section 8.1}} \times \text{power supply capacity reference value (kVA)} \quad \cdots\cdots ③$$

When using multiple power supply units, the total of the power supply capacity for each power supply unit obtained in equation ③ will be the total power supply capacity.

Example) When the value obtained in 8.1 equations ① and ② is 13.5kW, the CV-150 power supply unit will be selected, so the power supply capacity reference value (kVA) will be 23. Thus, from equation ③, the power supply capacity (kVA) will be (13.5/15) x 23 = 20.7 (kVA).

8.3 Selection of wire size

(1) Recommended power lead-in wire size

Select the wire size based on the power supply unit capacity as shown below regardless of the motor type.

	A-CR-10 A-CR-15 A-CR-22	A/B-CV-37 A-CR-37	A/B-CV-55 A-CR-55	A/B-CV-75 A-CR-75 A-CR-90	A/B-CV-110	A/B-CV-150	A/B-CV-185	A/B-CV-220
Recommended power lead-in wire size	IV2SQ	IV3.5SQ or HIV2SQ	IV3.5SQ or HIV3.5SQ	HIV5.5SQ	IV14SQ or HIV14SQ	IV22SQ or HIV14SQ	IV30SQ or HIV22SQ	IV38SQ or HIV30SQ

A/B-CV-260	A/B-CV-300	B-CV-370
IV50SQ or HIV38SQ	IV60SQ or HIV38SQ	HIV50SQ

(2) Recommended wire size for spindle motor output wire

Select the wire size based on the spindle drive unit capacity as shown below regardless of the motor type.

Spindle drive unit capacity	0.4K	0.75K	1.5K	2.2K	3.7K	5.5K	7.5K	11K
Recommended wire size for spindle motor output wire	IV2SQ or HIV2SQ	IV2SQ or HIV2SQ	IV3.5SQ or HIV2SQ	IV3.5SQ or HIV2SQ	IV3.5SQ or HIV2SQ	IV3.5SQ or HIV2SQ	IV5.5SQ or HIV3.5SQ	IV8SQ or HIV5.5SQ

15K	18.5K	22K	26K	30K
IV14SQ or HIV14SQ	IV22SQ or HIV14SQ	IV30SQ or HIV22SQ	IV38SQ or HIV30SQ	IV60SQ or HIV38SQ

(3) Recommended wire size for servomotor output wire

Select the wire size based on the servo drive unit capacity as shown below regardless of the motor type.

Servo drive unit capacity	0.1K	0.3K	0.5K	1.0K	2.0K	3.5K	4.5K	7.0K
Recommended wire size for servo motor output wire	IV1.25SQ OR HIV1.25SQ	IV1.25SQ or HIV1.25SQ	IV2SQ or HIV2SQ	IV2SQ or HIV2SQ	IV3.5SQ or HIV2SQ	IV5.5SQ or HIV3.5SQ	IV5.5SQ or HIV3.5SQ	IV8SQ or HIV5.5SQ

9.0K	11K	15K
IV8SQ or HIV8SQ	IV14SQ or HIV14SQ	IV30SQ or HIV22SQ

(Note) The wire sizes recommended in (1) to (3) above are selected with conditions of an ambient temperature of 30°C and three wires in the same tube.
During actual use, select the wire based on the above reference while considering the ambient temperature, wire material, and wiring state.

(4) Wire size for L11, L21 link bar

Regardless of the power supply unit and drive unit capacity, the wire size must be IV2SQ or more.
The wire between NFB ⟷ L11 and L21 must also be IV2SQ or more.

(5) Wire size for L+, L– link bar

[Selection method 1]

To unify the L+ and L– link bar size:
To unify the L+ and L– link bar size, use the wire sizes given below or a larger wire size for the L+ and L– link bar connected to the same power supply unit according to the power supply unit capacity.

Power supply unit	A-CR-10 A-CR-15 A-CR-22	A/B-CV-37 A-CR-37	A/B-CV-55 A-CR-55	A/B-CV-75 A-CR-75	A-CR-90	A/B-CV-110	A/B-CV-150
L+ and L– link bar wire size	IV2SQ	IV3.5SQ or HIV2SQ	IV3.5SQ or HIV2SQ	IV5.5SQ or HIV3.5SQ	IV8SQ or HIV5.5SQ	IV14SQ or HIV8SQ	IV14SQ or HIV14SQ

A/B-CV-185	A/B-CV-220	A/B-CV-260	A/B-CV-300	B-CV-370
IV22SQ or HIV14SQ	IV22SQ or HIV14SQ	IV38SQ or HIV22SQ	IV60SQ or HIV38SQ	IV60SQ or HIV50SQ

[Selection method 2]

To suppress the L+ and L– link bar size to the minimum required for each unit:
To suppress the L+ and L– link bar size to the minimum required for each unit, select the wire based on the current value that actually flows to the link bar.
The following drawing shows an example of a spindle and 3-axis servo system. The same selection method is used for other systems.

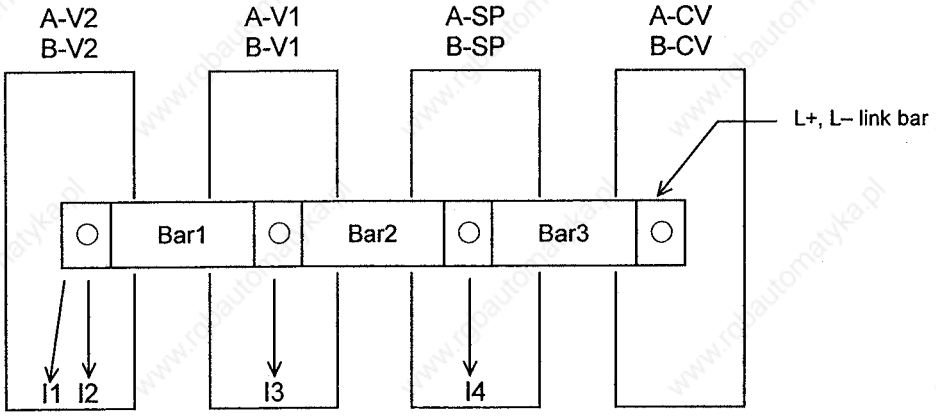

<1> If the current that flows through the L+, L– bus bars of each drive unit is I1 to I4, the current that flows through each link bar (Bar 1 to Bar 3) will be as follows:

$$\left.\begin{aligned} I\,(\text{Bar 1}) &= I1 + I2 \\ I\,(\text{Bar 2}) &= I1 + I2 + I3 \\ I\,(\text{Bar 3}) &= I1 + I2 + I3 + I4 \end{aligned}\right\} \quad \cdots\cdots \text{⑥}$$

Thus, the wire for each L+, L– link bar should tolerate the above current as a minimum.

<2> The I1 to I4 values are actually obtained with the following equation:

(I1 to I4) = Motor output current × 1.1 ..... ⑦

However, the motor output current in equation ⑦ is obtained with the following.

(A) Spindle motor
Substitute the following according to the spindle drive unit capacity :

Spindle drive unit capacity	0.4K	0.75K	1.5K	2.2K	3.7K	5.5K	7.5K	11K	15K	18.5K	22K	26K	30K
Motor output current (A)	4	6	10	17	25	30	40	60	74	94	103	127	165

(B) Servomotor
Substitute the following according to the servomotor name:

Motor name	HA053 HA13	HA23	HA33	HA40	HA43	HA80	HA83	HA100	HA103	HA200	HA203	HA300
Motor output current (A)	1.4	3.0	3.0	3.6	5.0	6.6	8.8	14.0	19.6	22.0	34.5	37.0

Motor name	HA303	HA700	HA703	HA900	HA50L	HA100L	HA150L	HA200L	HA300L	HA500L	HA-LH 11K2	HA-LH 15K2
Motor output current (A)	55	49.0	68	56.0	4.0	8.0	11.5	18.2	25.0	44.0	84.0	100.0

<3> Based on the values I1 to I4 obtained with equation ⑦, find I (Bar 1) to I (Bar 3) with equation ⑥. Match the obtained value with the values given below, and select the IV wire size.

Wire size	Tolerable current
IV2SQ	27 A
IV3.5SQ	37 A
IV5.5SQ	49 A
IV8SQ	61 A
IV14SQ	88 A
IV22SQ	115 A
IV38SQ	162 A
IV60SQ	217 A

(Ambient temperature 30°C or less)

<4> A selection example is shown below.

Drive unit	Motor	Motor output current
A/B-SP-75	SJ-7.5A	Substitute 40A
A/B-V1-20	HA100	Substitute 14A
A/B-V2-1010	HA80 × 2	Substitute 6.6A × 2

* The power supply unit capacity is as follows according to equation ② in section 8.1:
Power supply unit capacity > 7.5+0.7×(2+1+1) = 10.3→11(kW).
Thus, select CV-110.

For the above drive system, the following applies:

I1 = 6.6A × 1.1 = 7.3A
I2 = 6.6A × 1.1 = 7.3A
I3 = 14A × 1.1 = 15.4A
I4 = 40A × 1.1 = 44.0A

Thus,

I (Bar1) = I1 + I2 = 14.6A
I (Bar2) = I1 + I2 + I3 = 30.0A
I (Bar3) = I1 + I2 + I3 + I4 = 74.0A

Therefore, the following is selected according to the table in <3>:

Bar1 ..... IV2SQ
Bar2 ..... IV3.5SQ
Bar3 ..... IV14SQ

(6) Amplifier connection screw size

The screw size for each unit is as follows.

	Resistance regeneration type power supply unit	Power regeneration type power supply unit				Spindle drive unit				Servo drive unit					
										1-axis				2-axis	
Capacity (kW)	1.0~9.0	~7.5	11	15~18.5	22~37	~3.7	5.5~11	15~18.5	22~30	~3.5	4.5	7~9	11~15	~2 *2	~4.5 *3.5
Unit width	60	60	90	120	150	60	90	120	150	60	90	120	150	60	90
L1,L2,L3, ⏚	M4	M4	M5	M5	M8	–	–	–	–	–	–	–	–	–	–
U, V, W, ⏚	–	–	–	–	–	M4	M5	M5	M8	M4	M5	M5	M8	M4	M5
L+, L–	M6	M6	M6	M6	M6	M6	M6	M6	M6	M6	M6	M6	M6	M6	M6
L11, L21	–	M4	M4	M4	M4	M4	M4	M4	M4	M4	M4	M4	M4	M4	M4
MC1	M4	M4	M4	M4	M4	–	–	–	–	–	–	–	–	–	–
MC2, C	M4		–	–	–	–	–	–	–	–	–	–	–	–	–

(7) Select the wire size as follows for EC Directive compliance. (The sizes are all mm^2 units.) The wire types are as follow.

PVC : Polyvinyl chloride
EPR : Ethylene polypropylene
SIR : Silicone rubber

① MDS-A/B-CV (L1, L2, L3, PE)

Unit		37	55	75	110	150	185	220	260	300	370
Wire	PVC	2.5	2.5	4	6	10	16	25	35	50	70
	EPR	1.5	2.5	4	6	10	16	25	35	35	50
	SIR	1.0	1.5	2.5	4	6	10	16	16	25	25
Terminal screw size		M4			M5			M8			

② MDS-A/B-SP (U, V, W, PE)

Unit		04	075	15	22	37	55	75	110	150	185	220	260	300
Wire	PVC	1.0	1.0	1.0	1.0	1.5	2.5	4	6	10	16	25	35	70
	EPR	1.0	1.0	1.0	1.0	1.5	2.5	4	6	10	16	25	35	50
	SIR	1.0	1.0	1.0	1.0	1.0	1.0	2.5	4	6	10	10	16	25
Terminal screw size		M4					M5					M8		

③ MDS-A/B-V1, V2 (U, V, W, PE)

Unit		01	03	05	10	20	35	45	70	90	110	150
Wire	PVC	1.0	1.0	1.0	1.0	1.5	2.5	4	6	10	25	35
	EPR	1.0	1.0	1.0	1.0	1.0	1.5	4	6	10	16	25
	SIR	1.0	1.0	1.0	1.0	1.0	1.0	2.5	2.5	4	10	16
Terminal screw size		M4							M5		M8	

④ Wire size for L11 and L21 link bar
Regardless of the power supply unit and drive unit capacity, the wire size must be $1.5mm^2$ or more. (This also applies to the wire between NPB-L11 and L21.)

⑤ Wire size for L+ and L– link bar (for size unification)

Power supply unit		A-CV-37	A-CV-55	A-CV-75	A-CV-110	A-CV-150	A-CV-185	A-CV-220	A-CV-260	A-CV-300	A-CV-370
Wire	PVC	2.5	2.5	6	10	16	25	35	50	70	–
	EPR	1.5	2.5	4	10	16	25	35	35	70	70
	SIR	1.0	1.5	2.5	4	10	10	16	25	35	35
Terminal screw size		M6									

※ The above wire sizes follow EN60204 under the following conditions.
- Ambient temperature: 40°C
- Wire installed on wall or open cable tray

When using under other conditions, refer to Table 5 of EN60204 and Appendix C.

8.4 Selection of AC reactor, contactor and NFB

<1> Select the AC reactor, contactor and NFB from the following table when using only one power supply unit.

<table>
<tr><th>Power supply unit capacity</th><th>~ 7.5kW</th><th>11kW</th><th>15 ~ 18.5kW</th><th>22 ~ 30kW</th><th>37kW</th></tr>
<tr><td>AC reactor (ordered product)</td><td>B-AL-7.5K (Mitsubishi Electric)
* Refer to section 6. Outline Drawing for the dimensions</td><td>B-AL-11K</td><td>B-AL-18.5K</td><td>B-AL-30K</td><td>B-AL-37K</td></tr>
<tr><td>Recommended contactor (non-ordered part)</td><td>SK25-AC200V (Mitsubishi Electric)
* Refer to section 6. Outline Drawing for the dimensions</td><td>SK35-AC200V</td><td>SK50-AC200V</td><td>SK80-AC200V</td><td>SK150-AC200V</td></tr>
<tr><td>Recommended NFB1 (non-ordered part)</td><td>NF50CS3P-40A05 (Mitsubishi Electric)
* Refer to section 6. Outline Drawing for the dimensions</td><td>NF50CS3P-50A05</td><td>NF100CS3P-100A05</td><td>NF225CS3P-150A05</td><td>NF225CS3P-175A05</td></tr>
<tr><td>Recommended NFB2 (non-ordered part)</td><td colspan="5">An NFB or CP (circuit protector) can be used as the breaker for the motor fan. Select the NFB or CP by doubling the motor fan rated current value as a guideline. Contact the NFB or CP maker for the recommended wire size.
<table>
<tr><td>Spindle motor frame size</td><td>71</td><td>90</td><td>112</td><td>132</td><td>160</td><td>180</td></tr>
<tr><td>Motor fan rated current</td><td>0.1A</td><td>0.2A</td><td>0.2A</td><td>0.2A</td><td>0.6A</td><td>0.6A</td></tr>
</table>
<table>
<tr><td>Servomotor capacity</td><td>HA-LH11K2</td><td>HA-LH15K2</td></tr>
<tr><td>Motor fan rated current</td><td>0.2A</td><td>0.2A</td></tr>
</table>
* A rush current that is approximately double the above rated current will flow when the fan is started.</td></tr>
</table>

(Note) The following applies to the above table:

① Ordered parts refer to parts ordered by the user and shipped from Mitsubishi.
② Non-ordered parts refer to parts not ordered, but arranged by the user.

(Note) Use the EN/IEC Standards compliant parts for the contactor and NFB to comply with the EC Directives.

<2> Select the batch NFB1 and contactor as follows when using two or more power supply units.

(A) NFB1, contactor

(Note) With the MDS-B-CV-370, the contactor cannot be shared with other power supplies.

Total input current (A) = CV (No.1) input current (A) + CV (No.2) input current (A).

Substitute the following for the above equation of right side and obtained the total input current (A):

Power supply unit	A-CR-10 A-CR-15	A/B-CV-37 A-CR-22 A-CR-37	A/B-CV-55 A-CR-55	A/B-CV-75 A-CR-75	A-CR-90 A/B-CV-110	A/B-CV-150
Input current (A)	10	20	30	40	60	70

A/B-CV-185	A/B-CV-220	A/B-CV-260	A/B-CV-300	B-CV-370
80	100	120	135	160

Substitute the total input current (A) value in the following :

{ NFB1 ..... Rated current (A) in recommended NFB1 table
{ Contactor..... Rated conductivity current (A) in recommended contactor table

Select the NFB1 and contactor having a rated current larger than the total input current.

<3> The AC reactor cannot be shared between two and more power supply units. Always use one AC reactor for each power supply unit.

[Reference for contactor selection]

Mitsubishi Electric contactor

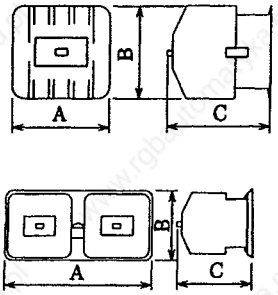

S-K21 type

AC operation AC electromagnetic contactor

Name	Model	AC Class 3 rated working current (A)		Rated conductivity current (A)	Support contact		Dimensions (mm)		
		200 ~ 220V	380 ~ 440V		Standard	Special	A	B	C
Open type	S-K10	11	7	20	1a	1b	44	66	78
Non-reversible type	S-K11	13	9	20	1a	1b	44	66	78
	S-K12	13	9	20	1a1b	2a	53	66	75
	S-K18	18	13	25	—	—	45	67	87.5
	S-K20	20	20	32	1a1b	2a	68	78	88
	S-K21	20	20	32	2a2b	—	68	78	96
	S-K25	26	24	50	2a2b	—	80	89	102
	S-K35	35	32	60	2a2b	—	80	89	102
	S-K50	50	46	80	2a2b	—	88	106	106
	S-K65	65	62	100	2a2b	—	88	106	106
	S-K80	80	75	135	2a2b	4a4b	100	124	127
	S-K95	93	93	135	2a2b	4a4b	100	124	127
	S-K100	100	100	150	2a2b	4a4b	100	150	136
	S-K125	125	120	150	2a2b	4a4b	100	150	136
	S-K150	150	150	200	2a2b	4a4b	120	160	145
	S-K180	180	180	260	2a2b	4a4b	138	204	174
	S-K220	220	220	260	2a2b	4a4b	138	204	174
	S-K300	300	300	350	2a2b	4a4b	163	243	195
	S-K400	400	400	450	2a2b	4a4b	163	243	195
	S-K600	630	630	660	2a2b	4a4b	290	310	234
	S-K800	800	800	800	2a2b	4a4b	290	310	234

Note 1. The contactor is currently being switched from the "S-K Series" to the "S-N Series". There are some types for which the installation dimensions are not compatible. Thus, confirm before purchasing.

Note 2. Noise is generated when the contactor turns ON to OFF, so use of a type with built-in surge absorber is recommended.

[Reference for NFB selection]

Mitsubishi Electric NFB

Frame A				30	50	60	100	225	400	600	800
Model				NF30-CB	NF50-CP	NF60-CP	NF100-CP	NF225-CP	NF400-CS	NF600-CS	NF800-CS
Appearance											
Rated current (A) Reference ambient temp.	General use: 40°C			3 5 10 15 20 30	10 15 20 30 40 50	(10)(15)(20) (30)(40)(50) 60 (*2)	(50) 60 75 100	(*3) (100) 125 150 175 200 225	250 300 350 400	500 600	Adjustable 600 700 800
	For ships	: 45°C									
No. of poles				2 3	2 3	2 3	2 3	2 3	2 3	3	3
Rated voltage (V)			AC	250	600	600	600	600	600	600	600
			DC	—	(*1) 250 —	(*1) 250 —	(*1) 250 —	(*1) 250 —	(*1) 250	(*1) 250	—
JIS (sym)		AC	550V	—	1.5	1.5	7.5	10	15	18	18
			460V	—	2.5	2.5	10	15	25	35	35
			220V	2.5	5	5	25	25	35	50	50
IEC [IEC157-1] [BS4752-1]		DC	250V	—	2.5 —	2.5 —	7.5 —	10 —	20	20	—
Rated shut-off capacity (kA)	P1 (sym)	AC	500V	—	2.5	2.5	7.5	10	15	18	18
			415V	—	2.5	2.5	10	15	25	35	35
			380V	—	5	5	18	18	25	35	35
			240V	2.5	5	5	25	25	35	50	50
		DC	250V	—	2.5 —	2.5 —	7.5 —	10 —	20	20	—
	NK (sym)	AC	500V	—	2.5	2.5	10	15	25	35	35
			250V	2.5	5	5	25	25	35	50	50
		DC	250V	—	2.5 —	2.5 —	7.5 —	10 —	—	—	—
Dimensions (mm)	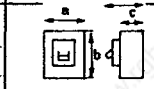		a	45 67.5	50 75	50 75	60 90	105	140	210	210
			b	96	130	130	155	165	257	275	275
			c	52	68	68	68	86	103	103	103
			c a	67	86	86	86	110	132	155	155
Surface type product weight (kg)				0.25 0.35	0.45 0.65	0.45 0.65	0.85 1.1	2.0 2.5	5.0 5.8	9.5	10.9
Connection method	Surface type (F)		Page	◉ For crimp terminal	◉ For crimp terminal	◉ For crimp terminal	◉ With barrier for crimp terminal	◉ With barrier for crimp terminal	◉ With bar terminal and barrier	◉ With bar terminal and barrier	◉ With bar terminal and barrier
	Rear surface type (B)		82	—	○ Round stud	○ Round stud	○ Round stud	○ Bar stud	◉ Bar stud	◉ Bar stud	◉ Bar stud
	Inlaid type (FP)			—	○	○	○	○	◉	◉	○
	Insertion type (PM)			—	○	○	○	○	○	○	○
With accessory devices	Alarm switch (AL)			— ◉	○	○	○	○	○	○	○
	Auxiliary switch (AX)			— ◉	○	○	○	○	○	○	○
	Voltage trip device (SHT)		92	—	○	○	○	○	○	○	○
	Undervoltage trip device (UVT)			—	○	○	○	○	○	○	○
	Electrical operation type (NFM)		118	—	—	—	— △ (Solenoid)	△ (Solenoid)	○ (Spring charge)	○ (Spring charge)	○ (Spring charge)
	Machine interlock (M1)		109	—	△	△	△	△	△	△	△
	Lead wire terminal block (LT)		97	—	○	○	○	○	○	○	○
	Boxed: Closed type (S)		106	○	○	○	○	—	—	—	—
	Boxed: Dust-proof type (1)			—	○	○	○	○	△	△	△
	Boxed: Waterproof type (W)			—	— △	— △	△	△	△	△	△
Optional parts	Door lock device (*4) (HL) (LC)		116	◉ (LC)	○ (HL) (LC)	○ (HL) (LC)	○ (HL) (LC)	○ (HL) (LC)	○ (HL)	○ (HL)	○ (HL)
	Operation door handle (TOTTE)	F type	98	—	◉ (F032P) ◉ (F03)	◉ (F032P) ◉ (F03)	◉ (F102P) ◉ (F10)	◉ (F20)	◉ (F40)	◉ (F60)	◉ (F60)
		S type	102	—	◉ (S03) (142SS)	◉ (503) (142SS)	◉ (S10) (141SS)	◉ (S20) (42SS)	◉ (S41) (60SS)	◉ (S40) (61SS)	◉ (S40) (61SS)
	Terminal cover (TC-L, S) (BTC)		110	◉ (TC-L) (TC-S)	◉ (TC-L)(TC-S) (BTC)	◉ (TC-L)(TC-S) (BTC)	◉ (TC-L)(TC-S) (BTC)	◉ (TC-L)(TC-S) (BTC)	◉ (TC-L) (BTC)	◉ (TC-L) ○ (BTC)	◉ (TC-L) ○ (BTC)
	Surface stud (B-ST)		84	—	◉	◉	◉	◉	△ ◉	—	—
	Inlaid installation frame		84	—	◉	◉	◉	◉	◉	◉	◉
	Insert terminal block		85	—	◉	◉	◉	◉	◉	◉	◉
Electrical part type approval (▽ obtained)				▽	▽	▽	▽	—	—	—	—
Approval from Shipping Federation (☆ obtained, ☐ pending) (NK,LR,BV,AB,GL)				☆ (Excluding AB)	—	☆	☆	☆	☆ NK, AB, LR ☐ GL		
Standard trip method				Fully electromagnetic				Heat — electromagnetic		Heat-adjustable electromagnetic	Electronic (adjustable)
Trip button				—	Yes	Yes	Yes	Yes	Yes	Yes	Yes
Outline / characteristics page				124	126	132	136	144	154	160	166

(Notes) *1 : Specify when using for DC.
*2 : The same structure as NF50-CS will be used for 50A or less.
*3 : The NF225-CS rated current 100A indicates the shut-off capacity for the rated voltage 380VAC or higher (JIS, IEC)

II. MDS-A-CV, MDS-B-CV
Power Regeneration Type
Power Supply Section

MDS-A-CR
Resistance Regeneration Type
Power Supply Section A

1. Power Regeneration Type Power Supply

1.1 Outline

MDS-A/B-CV power supply outline

(1) The converter section that was conventionally built in each servo drive unit and spindle drive unit has been integrated into one unit for common use.
(2) The heat generation has been greatly reduced by using an IPM (Intelligent Power Module).
(3) The 37.0kW unit has been newly added to the MDS-B Series.
Always install a contactor when using the 37.0kW unit.
(4) With the MDS-B Series, an emergency stop signal input from an external source can be added, and the contactor directly shut off from the power supply.

1.2 Model configuration

Power supply unit model configuration

MDS-A-CV- □
MDS-B-CV- □
Power supply capacity class symbol

Symbol	Capacity (kW)
37	3.7
55	5.5
75	7.5
110	11.0
150	15.0
185	18.5
220	22.0
260	26.0
300	30.0
370	37.0

* The 37.0kW is available only with the MDS-B Series.

⚠ WARNING

1. Do not omit the external contactor when using the MDS-B-CV-370. Failure to install it could lead to damage.

1.3 List of specifications

		Power supply unit model name									
	Unit	A-CV-37 B-CV-37	A-CV-55 B-CV-55	A-CV-75 B-CV-75	A-CV-110 B-CV-110	A-CV-150 B-CV-150	A-CV-185 B-CV-185	A-CV-220 B-CV-220	A-CV-260 B-CV-260	A-CV-300 B-CV-300	B-CV-370
Output voltage		270V ~ 311V									
Main circuit method		Converter with regenerative circuit (with IPM incorporated)									
Tolerable ambient temperature	°C	0 ~ 55°C									
Tolerable ambient relative humidity	%	90% or less (with no dew condensation)									
Storage temperature	°C	–15°C ~ 70°C									
Storage relative humidity	%	90% or less (with no dew condensation)									
Atmosphere		No toxic gas or dust									
Tolerable vibration	G	0.5G									
Tolerable shock	G	5G (acceleration) : When packaged									
Maximum heating value	W	55	65	80	130	160	200	220	270	330	420
Weight	kg	5.0	5.0	5.0	8.5	10.5	10.5	12.5	12.5	12.5	12.5
Capacity	kW	3.7	5.5	7.5	11.0	15.0	18.5	22.0	26.0	30.0	37.0
Tolerable power voltage	V	200/200 ~ 230V $^{+10\%}_{-15\%}$ 50/60Hz ±3Hz									
Noise	dB (A)	Less than 55dB									

1.4 Hardware setting

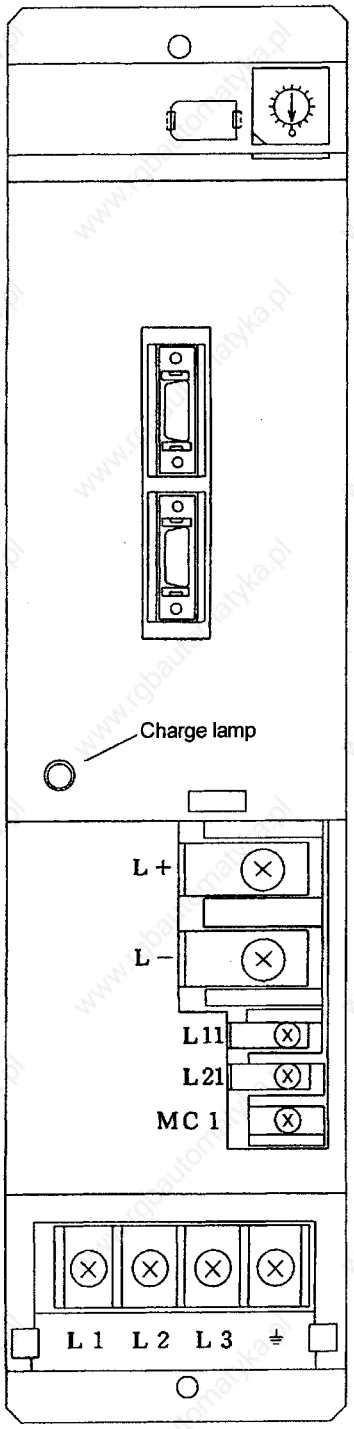

Set the rotary switch (SW1) as shown below.

SW1 setting	A-CV usage state	B-CV usage state	
0	During operation with contactor (deposits are detected)	During operation with contactor (deposits are detected)	External emergency stop
1	During operation with no contactor	During operation with no contactor	When not used
2	Setting prohibited	Setting prohibitied	
3			
4		During operation with contactor (deposits are detected)	External emergency stop
5		During operation with no contactor	When used
6		Setting prohibited	
7			
8	Setting prohibited		
9			
10			
11			
12			
13			
14			
15			

By opening the lid (to right of LED status display window) on the upper front of the power supply unit and turning the rotary switch, the use of the externally installed contactor can be set.
The example on the left shows the settings with the contactor.
Note that the external contactor cannot be omitted for the MDS-B-CV-370. Therefore, the "1" and "5" settings of SW1 are prohibited.

1.5 Status display

⚠ WARNING

1. Do not touch the switches with wet hands. Failure to observe this could lead to electric shocks.
2. Do not operate the unit with the front cover removed. The high voltage terminals and charged sections will be exposed, and can cause electric shocks.
3. Do not open the front cover whole the power is ON or during operation. Failure to observe this could lead to electric shocks.

⚠ CAUTION

1. Check and adjust each parameter before starting operation. Failure to do so could lead to unforeseen operation of the machine.
2. The servo amplifier's radiating fins, regenerative resistor and servomotor, etc., will be hot while operating and for some time after the power is turned OFF. Thus, do not touch these parts. Failure to observe this could lead to burns.

1.5.1 7-segment LED display

1) Power ON

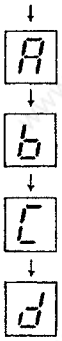

Initializing

Ready OFF

Ready ON, servo OFF

Servo ON

2) Display during alarm (example shows overvoltage alarm)

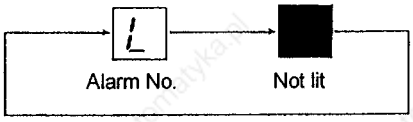

The alarm No. flickers

3) Display during warning (example shows instantaneous stop warning)

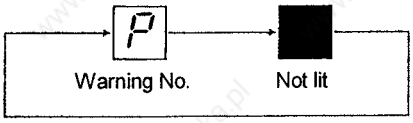

The warning No. flickers

4) Watch dog alarm

1.5.2 Charge lamp

This lamp lights when the rectifying voltage between P and N is charged over a set level. Always confirm that the charge lamp is not lit, and using a tester, confirm that the voltage has been discharged before starting maintenance work such as replacing the unit.

1.6 List of alarms and warnings

⚠ CAUTION
When an alarm occurs, remove the cause of the alarm, confirm that an operation signal is not being input, and secure the safety. Then reset the alarm to resume operation.

When an alarm occurs in the servo amplifier, the base will be shut off and the motor will coast to a stop.
Turn the power OFF with an external sequence. (Refer to 1.9 Main circuit connection.)
When resetting the alarm, remove the cause, and then turn the power ON.

(1) Alarms

[Alarm No.] Alarm No. displayed on drive unit connected with power supply unit
[LED display] LED display on power supply unit
[Release] AR : Release by turning power supply on again
PR : Release by turning the NC power supply on again
NR : Release with the NC RESET key

	Alarm No.	LED display	Name	Meaning	Release
	61 (61)	1	Power module overcurrent	An overcurrent (Ic) was detected in the power module (IPM).	PR
	63 (63)	3	Auxiliary regeneration error	The auxiliary circuit transistor stays on.	PR
	65 (65)	5	Rush relay error	The rush resistance short circuit relay does not turn on.	PR
	67 (67)	7	Open phase	One of the input power phases (R,S,T) is open.	PR
	68 (68)	8	Watch dog	The power supply software process did not complete within the set time.	AR
	69 (69)	9	Ground fault	There is a ground fault in the motor. This is detected only at READY ON.	PR
	6A (6A)	A	External contactor melt	The externally installed contactor turned on even during ready OFF.	PR
	6B (6b)	b	Rush relay melt	The rush resistance short circuit relay is still on.	PR
	6C (6C)	C	Main circuit error	The main circuit capacitor charging operation is not normal.	PR
	6E (6E)	E	Memory error	An error occurred in the memory circuit.	AR
	6F (6F)	F	AD converter error Power supply error	An AD converter error or power supply error was detected.	AR
	71 (71)	H	Instantaneous stop External emergency stop	The external contactor turned off even during ready ON. An instantaneous power stop occurred for 55ms or more.	NR
*1	73 (73)	J	Over-regeneration	The regeneration performance limit of the power supply was exceeded.	PR (Note 1)
	75 (75)	L	Overvoltage	The voltage between L+ and L– exceeded 410V.	NR
*1	76 (76)	n	External emergency stop setting error	The rotary switch setting and parameter (PTYP) setting do not match.	AR
	77 (77)	n	Power module overheat	Overheating of the power module (IPM) was detected.	AR

Note 1) With alarm "73", to prevent immediately resumption of operation from the over-regeneration state, the alarm cannot be released unless the control power (L11, L12) continuity state has continued for 15 minutes or more after the alarm has occurred. The alarm cannot be released even if the NC power or control power is turned ON immediately after the alarm occurs. If the power is turned ON immediately after the alarm occurred, wait 15 minutes or more in the continuity state, and then turn the power ON again.

(2) Warning

	Alarm No.	LED display	Name	Meaning
	E8 (E8)	o (o)	Auxiliary regeneration frequency over	The regeneration frequently exceeds the power supply regeneration capacity limit.
	E9 (E9)	P (P)	Instantaneous stop warning	An instantaneous power stop occurred for 25ms or more. (As the main circuit voltage has not dropped, an alarm has not occurred.)
*1	EA (EA)	q (q)	External emergency stop input	The external emergency stop input signal was input. (24V is not applied on the CN23 connector.)
	EB (Eb)	r (r)	Over-regeneration warning	80% of the over-regeneration alarm level was reached.

*1) These alarms and warning have been added from the MDS-B Series.

1.7 Explanation of connectors and terminal block

The CN23 external emergency stop connection connector has been added to the MDS-B Series.

		Name	Application	Remarks
Connector		CN4 CN9 CN23	For connection of servo and spindle amplifier (CH1) For connection of servo and spindle amplifier (CH2) For connection of the external emergency stop	Added with MDS-B.
Terminal block	TE2	L+ L–	Converter voltage output (+) Converter voltage output (–)	
	TE3	L11 L12 MC1	200VAC single phase input For externally installed contactor relay control	
	TE1	L1 L2 L3 ⏚	3-phase input power 200/220VAC Grounding	

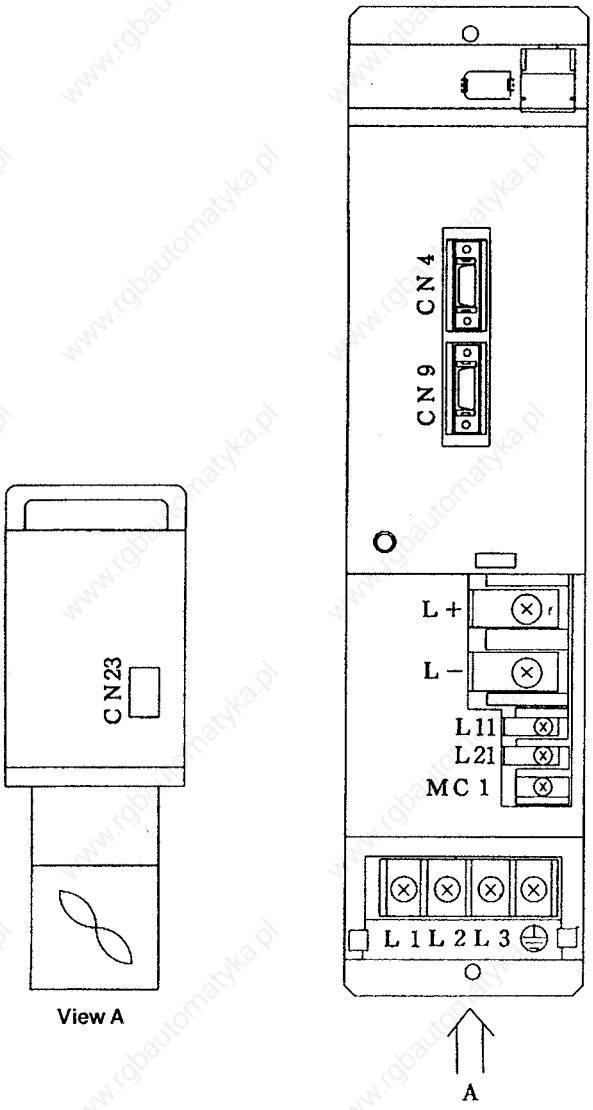

1.8 Functions added with MDS-B Series (Power supply external emergency stop function)

(1) Outline

An independent emergency stop signal from an external source has been added in addition to the emergency stop signal from the NC bus line, allowing double protection. When this function is not used, the specifications are the same as the A Series.

(2) Details of detection

1) Setting

When using the external emergency stop, the protection setting must be validated with the rotary switch on the front of the MDS-B-CV and the parameter (PTYP) of the connected drive unit.

Rotary switch : External contact valid ..... Set to 4

External contact invalid..... Set to 5

Parameter (PTYP) : Add 0040 to the currently set value.

(Example)

Current	Setting value
0008	0048
0030	0070

Note) If either of the settings are not made, an "external emergency stop setting error" will occur.

2) Detection details

If the external emergency stop input is detected continuously for 200ms or more, this function will start.

If the contactor OFF command from the NC Is not received within 30 seconds after the external emergency stop input is detected, the CV itself will turn the contactor OFF.

3) Alarm (Warning) list

CV display (flicker)	Connected amplifier display	Alarm/warning details
m	76	External emergency stop setting error
q	EA	Emergency stop state from NC when external emergency stop input is input
q	6F	When emergency stop from NC is not applied even when the external emergency stop is input

(3) Connection

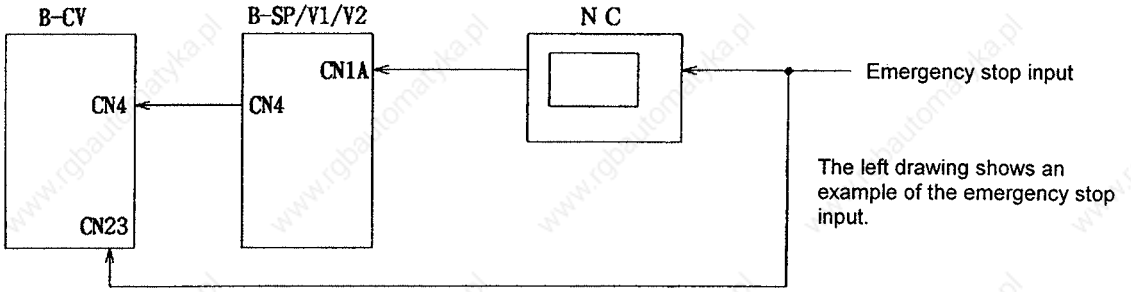

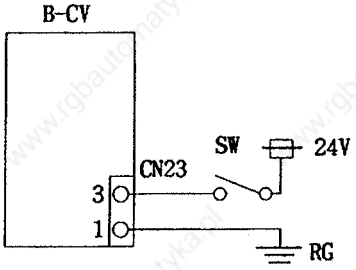

* The current that flows when the contact is ON is 15mA. Make sure not to mistake the polarity. (This function will not work if the 24VDC polarity is mistaken.)

* The emergency stop operation is applied when the switch in the diagram opens.

(4) Connector name

Part No.	Name	Type	Maker
101	Connector	2-178288-3	Japan AMP
102	Contact	1-175218-2	Japan AMP

Wire size: 0.5 to 1.25SQ

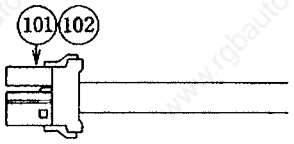

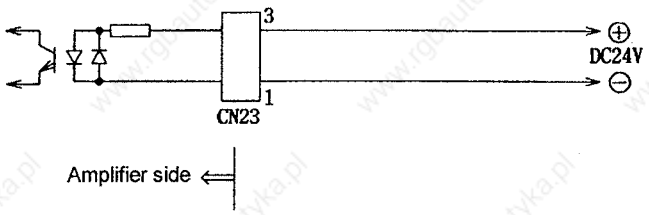

1.9 Main circuit connection

⚠ WARNING

Ground the servo amplifier and servomotor with Class 3 grounding or higher.

⚠ CAUTION

1. Correctly connect the servo amplifier and servomotor power supply phases (U, V, W). The servomotor will operate abnormally.
2. Do not apply a voltage other than that specified on each terminal. Failure to observe this could lead to breakage or trouble.

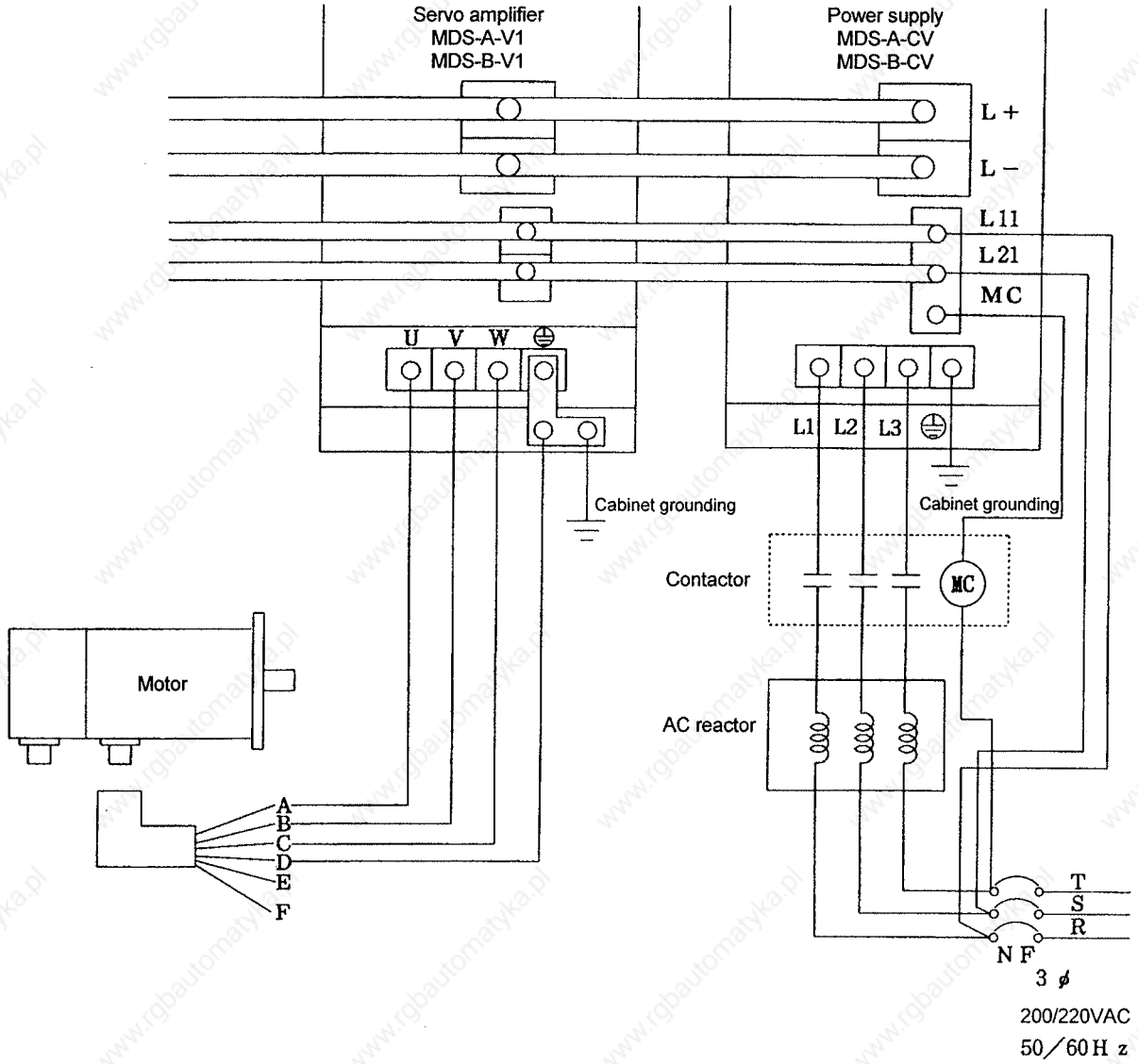

* A grounding bar is enclosed with each unit manufactured after April 1995. Use separate wiring as shown below so that the grounding is not commonly tightened.

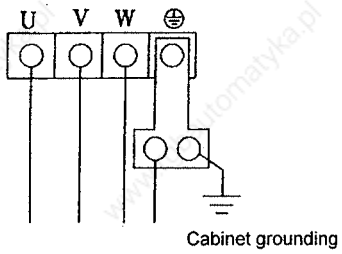

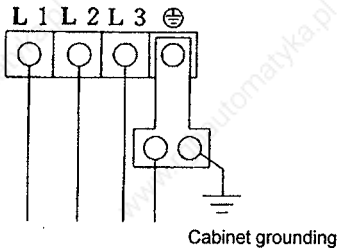

Precautions for connections

(1) The wires and crimp terminals will differ according to the capacity.
(Refer to section 8.3 in the Chapter I Servo/spindle system configuration.)
(2) A 200V class power supply is used.
The main circuit section does not have a transformer so always ground it.
(3) The phase order of the power supply terminals L1, L2, L3 is random.
(4) Refer to Section 8.3 in the Servo/Spindle system configuration for the selection of the contactor, AC reactor and non-fuse breaker connected to the power supply.
(5) The specified power supply must be connected to the amplifier power supply terminals (L1, L2 and L3). Use a transformer when the power supply is not as specified.
(6) The power supply wires (R, S, T) must not be connected to the motor output terminals (U, V, W).
(7) The output terminal (U, V, W) and motor terminal (A, B, C) phases must match.
(8) Do not directly apply commercial power on the motor.
(9) Check once again that the wires are connected correctly as indicated in the connection diagram.

2. Resistance Regeneration Type Power Supply

2.1 Outline

The following items differ from the power supply unit (MDS-A/B-CV).
Refer to 2.10 Resistance regeneration converter wiring diagram for details.

(1) Input the following into connector CN22.
- Control power supply 24V (current capacity 500mA)
- Resistor unit's thermal signal

(Prepare 24VDC for control, and input.)

(2) Make sure that the control 24VDC power supply described in (1) above, is turned ON before the servo and spindle drives and the NC.

(3) The conventional control power supply 200VAC input is not required.
(The resistor unit R1 and conductor excitation signal are wired to the terminal block where the conventional 200VAC was input.)

(4) The resistance regeneration converter unit series does not have the external heat radiating fins.
(These are installed inside, so the conventional square hole for sealing is not required.)

(5) A standalone regenerative resistor unit is required.

(6) The power is not regenerated, so the AC reactor is not required.

2.2 Model configuration

Resistance regeneration converter unit model configuration

MDS-A-CR- [ ]

Resistance regeneration converter capacity class symbol

Symbol	Capacity (kW)
10	1.0
15	1.5
22	2.2
37	3.7
55	5.5
75	7.5
90	9.0

2.3 List of specifications

			Resistance regeneration converter unit model name						
		Unit	A-CR-10	A-CR-15	A-CR-22	A-CR-37	A-CR-55	A-CR-75	A-CR-90
Output voltage			270V						
Main circuit method			Converter with resistance regeneration circuit						
Tolerable ambient temperature		°C	0 ~ 55°C						
Tolerable ambient relative humidity		%	90% or less (with no dew condensation)						
Storage temperature		°C	–15°C ~ 70°C						
Storage relative humidity		%	90% or less						
Atmosphere			No toxic gas or dust						
Tolerable vibration		G	0.5G						
Tolerable shock		G	5G (acceleration) : When packaged						
Maximum heating value		W	21W	24W	33W	43W	52W	62W	80W
Weight		kg	2.0	2.0	2.0	2.0	2.0	2.5	2.5
Capacity		kW	1.0	1.5	2.2	3.7	5.5	7.5	9.0
Tolerable power voltage	RST	V	200/200 ~ 230VAC +10% –10% 50/60Hz ±3Hz						
	Control power supply	V	24VDC ± 15%						

2.4 Capacity selection

2.4.1 Regenerative resistor unit capacity selection

(1) List of regenerative resistor units

The regenerative resistor units (external installation) compatible with the resistance regeneration converter units are as follow.

	No.	Type	Tolerable regenerative capacity (WR)	Outline drawing	Thermal signal	FAN
	①	GZG200W26OHMJ	80W	Fig. 1	Not provided	Not provided
Note 1	②	GZG300W13OHMJ×2	150W	Fig. 1	Not provided	Not provided
	③	MR-RB30	300W	Fig. 2	Provided	Not provided
	④	MR-RB50	500W	Fig. 3	Provided	Not provided
Note 2	⑤	GZG200W20OHMJ×3	350W	Fig. 1	Not provided	Not provided
Note 2	⑥	GZG300W20OHMJ×3	500W	Fig. 1	Not provided	Not provided
	⑦	R-UNIT-1	700W	Fig. 4	Provided	Provided
	⑧	R-UNIT-2	700W	Fig. 4	Provided	Provided
	⑨	R-UNIT-3	2.1Kw	Fig. 5	Provided	Provided

Refer to section 2.11 Regenerative resistor unit outline drawing.

Note 1. This is a 2-unit serial type.
Note 2. This is a 3-unit parallel type.

(2) Selection of the regenerative resistor unit

Select the corresponding regenerative resistor unit from the following table.

Regenerative resistor converter capacity	Spindle motor capacity (kW)	Servomotor capacity (for 2 or more axes)	Servomotor capacity (for 1 axis) (kW)	Corresponding regenerative resistor unit No.
9kW (A-CR-90)	7.5	2.8kW or less	2.0	⑧, ⑨
	5.5	5.7kW or less	3.5	⑧, ⑨
	3.7	8.2kW or less	4.5	⑤, ⑥
	2.2	10.4kW or less	7.0	⑤, ⑥
	1.5	11.4kW or less	9.0	⑤, ⑥
	–	13.5kW or less	9.0	⑤, ⑥
7.5kW (A-CR-75)	7.5	0.7kW or less	0.5	⑧, ⑨
	5.5	3.5kW or less	2.0	⑧, ⑨
	3.7	6.1kW or less	3.5	⑤, ⑥
	2.2	8.2kW or less	4.5	⑤, ⑥
	1.5	9.2kW or less	4.5	⑤, ⑥
	–	10.6kW or less	7.0	⑤, ⑥
5.5kW (A-CR-55)	5.5	0.7kW or less	0.5	⑧, ⑨
	3.7	3.2kW or less	2.0	⑧, ⑨
	2.2	5.4kW or less	3.5	③, ④
	1.5	6.4kW or less	4.5	③, ④
	0.75	7.5kW or less	4.5	③, ④
	–	8.5kW or less	4.5	③, ④
3.7kW (A-CR-37)	3.7	0.7kW or less	0.5	⑧, ⑨
	2.2	2.8kW or less	2.0	⑧, ⑨
	1.5	3.8kW or less	2.0	③, ④
	0.75	4.9kW or less	3.5	③, ④
	–	6.0kW or less	3.5	③, ④
2.2kW (A-CR-22)	2.2	0kW or less	0	⑦
	1.5	1.0kW or less	0.5	⑦
	0.75	2.0kW or less	1.0	⑦
	0.4	2.5kW or less	1.0	②
	–	3.1kW or less	2.0	②
1.5kW (A-CR-15)	1.5	0kW or less	0	⑦
	0.75	1.0kW or less	0.5	②
	0.4	1.5kW or less	1.0	②
	–	2.1kW or less	1.0	①
1.0kW (A-CR-10)	0.75	0.3kW or less	0.1	②
	0.4	0.8kW or less	0.5	②
	–	1.4kW or less	1.0	①

Note 1. Confirm that the regenerative energy under the working conditions is within the tolerable regeneration capacity (Refer to regenerative resistor unit list) of the regenerative resistor unit. (The following expression must be satisfied.)

$$WR \geq \sum_{i=1}^{m} \frac{ni}{120} \left\{ \frac{Ji}{100000} \left[\frac{2\pi Ni}{60} \right]^2 + Wi \cdot g \cdot \frac{hi}{1000} \cdot 0.8 \right\}$$

WR : Tolerable regeneration capacity of resistor unit [W]
m : No. of axes
ni : i axis acceleration/deceleration frequency (repeated positioning frequency) [times/min]
Ji : i axis motor shaft conversion inertia [$\times 10^{-4}$kg·m^2]
Ji = JLi + JMi
JLi : Motor shaft conversion load inertia [$\times 10^{-4}$kg·m^2]
JMi : Working motor rotor inertia [$\times 10^{-4}$kg·m^2]
Ni : i axis motor speed [rpm]
g : 9.80665 [m/s^2]
Wi : i axis unbalance weight [kg]
hi : Vertical shaft full stroke (i axis) [mm]

Note 2. One regenerative resistor must be installed for each resistance regeneration converter unit. Conversely, multiple regenerative resistance units cannot be installed on one resistance regeneration converter unit.

2.5 Hardware and parameter settings

⚠ CAUTION
Do not make remarkable adjustments or changes of the parameters as the operation may become unstable.

(1) Hardware settings

Regardless of whether an external contactor is provided, set the rotary switch to 0.

(2) Parameter settings

The specified parameters are set only for the drive unit to which the resistance regeneration converter is connected.

[Servo parameters/spindle parameters]

SV036/SP041 PTYP

F	E	D	C	B	A	9	8	7	6	5	4	3	2	1	0
				rtyp				ptyp							

rtyp Regenerative resistor unit type
(Set type from following table)

External regenerative resistor type	Resistance value (Ω)	Wattage (W)	rtyp
Power supply not connected	–	–	00
GZG200W260HMJ	26	80	01
GZG300W130HMJ × 2	26	150	02
MR-RB30	13	300	03
MR-RB50	13	500	04
GZG200W200HMJ × 3	6.7	350	05
GZG300W200HMJ × 3	6.7	500	06
R-UNIT-1	30	700	07
R-UNIT-2	15	700	08
R-UNIT-3	15	2.1K	09

ptyp Resistance regeneration converter unit type
(Set type from following table)

Converter unit type	ptyp
A-CR-10	81
A-CR-15	82
A-CR-22	83
A-CR-37	84
A-CR-55	86
A-CR-75	88
A-CR-90	89

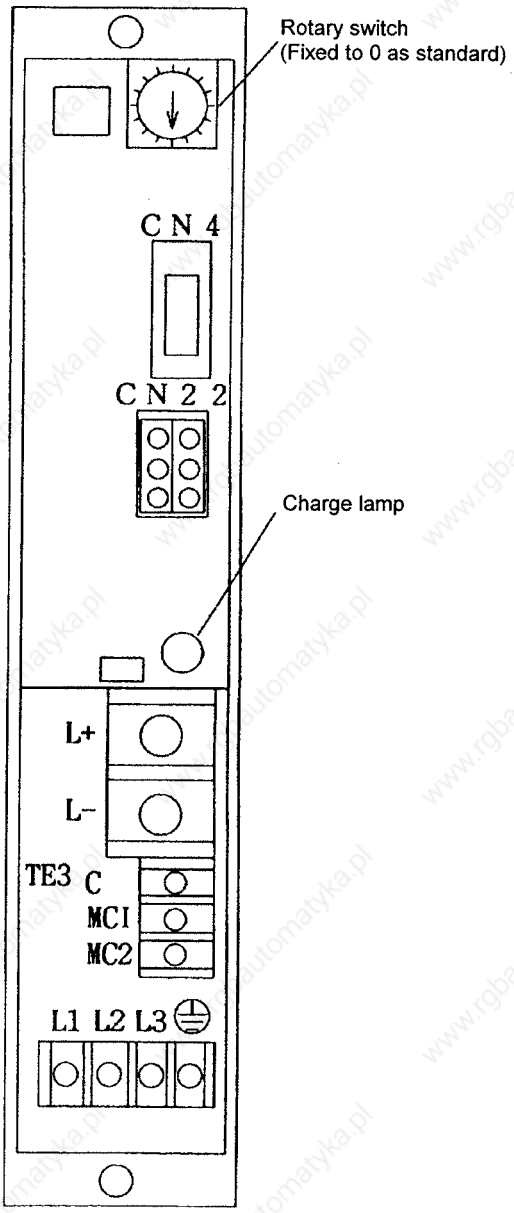

External regenerative resistor and power supply (A-CR) compatibility table

External regenerative resistor type	rtyp	CR-10	CR-15	CR-22	CR-37	CR-55	CR-75	CR-90
GZG200W260HMJ	01	○	○	○	○	○	○	○
GZG300W130HMJ × 2	02	○	○	○	○	○	○	○
MR-RB30	03	×	×	×	○	○	○	○
MR-RB50	04	×	×	×	○	○	○	○
GZG200W200HMJ × 3	05	×	×	×	×	×	○	○
GZG300W200HMJ × 3	06	×	×	×	×	×	○	○
R-UNIT-1	07	○	○	○	○	○	○	○
R-UNIT-2	08	×	×	×	○	○	○	○
R-UNIT-3	09	×	×	×	○	○	○	○

2.6 Status display

⚠ WARNING

1. Do not touch the switches with wet hands. Failure to observe this could lead to electric shocks.
2. Do not operate the unit with the front cover removed. The high voltage terminals and charged sections will be exposed, and can cause electric shocks.
3. Do not open the front cover whole the power is ON or during operation. Failure to observe this could lead to electric shocks.

⚠ CAUTION

1. Check and adjust each parameter before starting operation. Failure to do so could lead to unforeseen operation of the machine.
2. The servo amplifier's radiating fins, regenerative resistor and servomotor, etc., will be hot while operating and for some time after the power is turned OFF. Thus, do not touch these parts. Failure to observe this could lead to fires.

(1) 7-segment LED display

(a) Power ON

↓

Initializing

↓

Ready OFF

↓

Ready ON, servo OFF

↓

Servo ON

(b) Display during alarm (example shows overvoltage alarm)

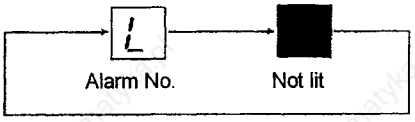

The alarm No. flickers

(c) Display during warning (example shows instantaneous stop warning)

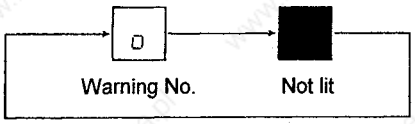

The warning No. flickers

(d) Watch dog alarm

(2) Charge lamp

This lamp lights when the rectifying voltage between P and N is charged over a set level. Always confirm that the charge lamp is not lit before starting maintenance such as replacing the unit.

2.7 List of alarms and warnings

⚠ CAUTION
When an alarm occurs, remove the cause of the alarm, confirm that an operation signal is not being input, and secure the safety. Then reset the alarm to resume operation.

When an alarm occurs in the servo amplifier, the base will be shut off and the motor will coast to a stop. Turn the power OFF with an external sequence. (Refer to 5.7 Main circuit connection.)
When resetting the alarm, remove the cause, and then turn the power ON.

IMPORTANT

When a regeneration alarm (AL63) occurs, if operation is repeated by turning the power OFF and ON, trouble could occur due to heating of the external regenerative resistor. Exercise caution in this case.

(1) Alarms

[Alarm No.] Alarm No. displayed on drive unit connected with resistance regeneration converter unit
[LED display] LED display on resistance regeneration converter unit
[Release] AR : Releases by turning the resistance regeneration converter unit power on again
PR : Release by turning the NC power supply on again
NR : Release with the NC RESET key

Alarm No.	LED display	Name	Meaning	Release
60	0	Instantaneous stop	The 24VDC dropped.	PR
63	3	Regeneration error	The regeneration transistor turned ON while the regeneration command was OFF.	PR
65	5	Rush relay error	The rush relay does not turn on, and chattering occurs.	PR
68	8	Watch dog	CPU runaway	AR
69	9	Ground fault	Driver UVW ground fault	PR
6B	b	Rush relay melt	The rush relay did not turn OFF	PR
6C	C	Main circuit error	The bus is short circuited, the charge to the main circuit is abnormal	PR
6D	d	Parameter error	The regenerative resistor setting is not adequate	PR
6E	E	Memory error	The memory cannot be read/written correctly	AR
73	J	Over-generation	The regeneration load was exceeded	PR
74	t	Regeneration resistor overheat	The regenerative resistor thermal functioned	PR
75	L	Overvoltage	The bus voltage rose.	NR
77	n	PCB overheat	Overheating of thermal in amplifier	PR

(2) Warning

E8	o	Over-regeneration warning	80% of the over-regeneration alarm level	

2.8 Resistance regeneration converter unit outline drawing

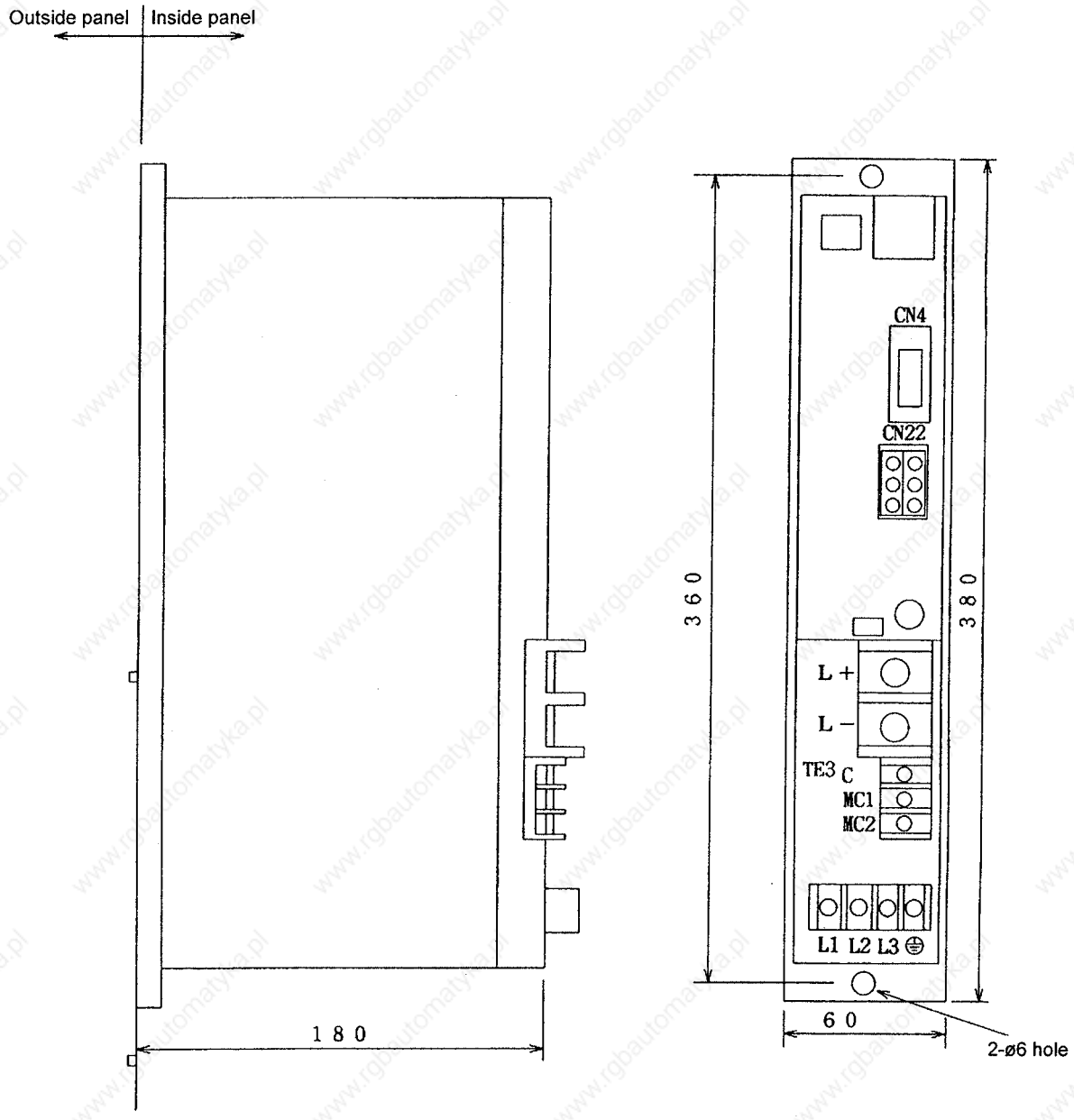

2.9 Connection of each unit

CAUTION

Do not apply a voltage other than that specified on each terminal. Failure to observe this could lead to breakage or trouble.

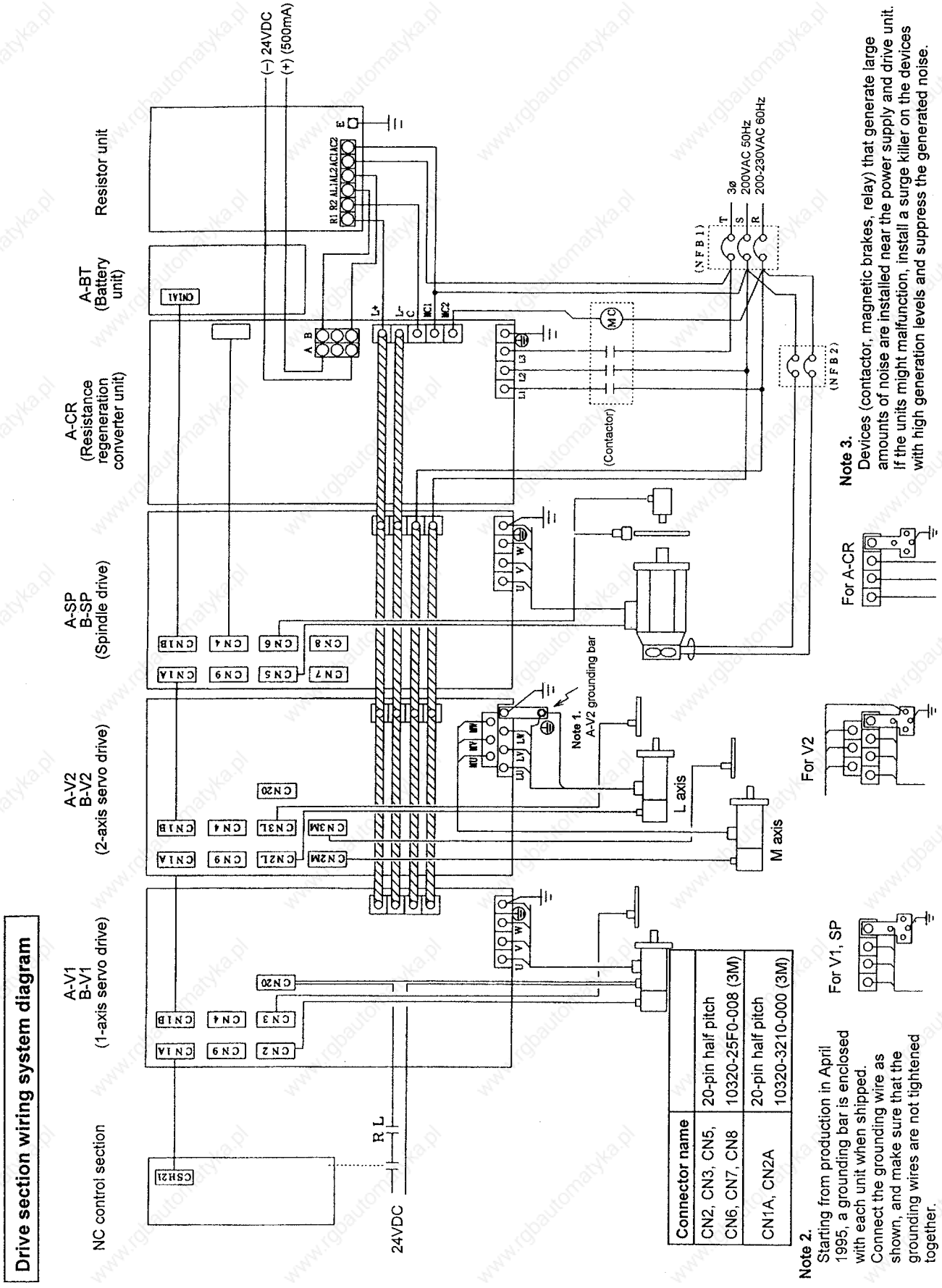

2.10 Resistance regeneration converter wiring diagram

(1) For GZG type resistor unit

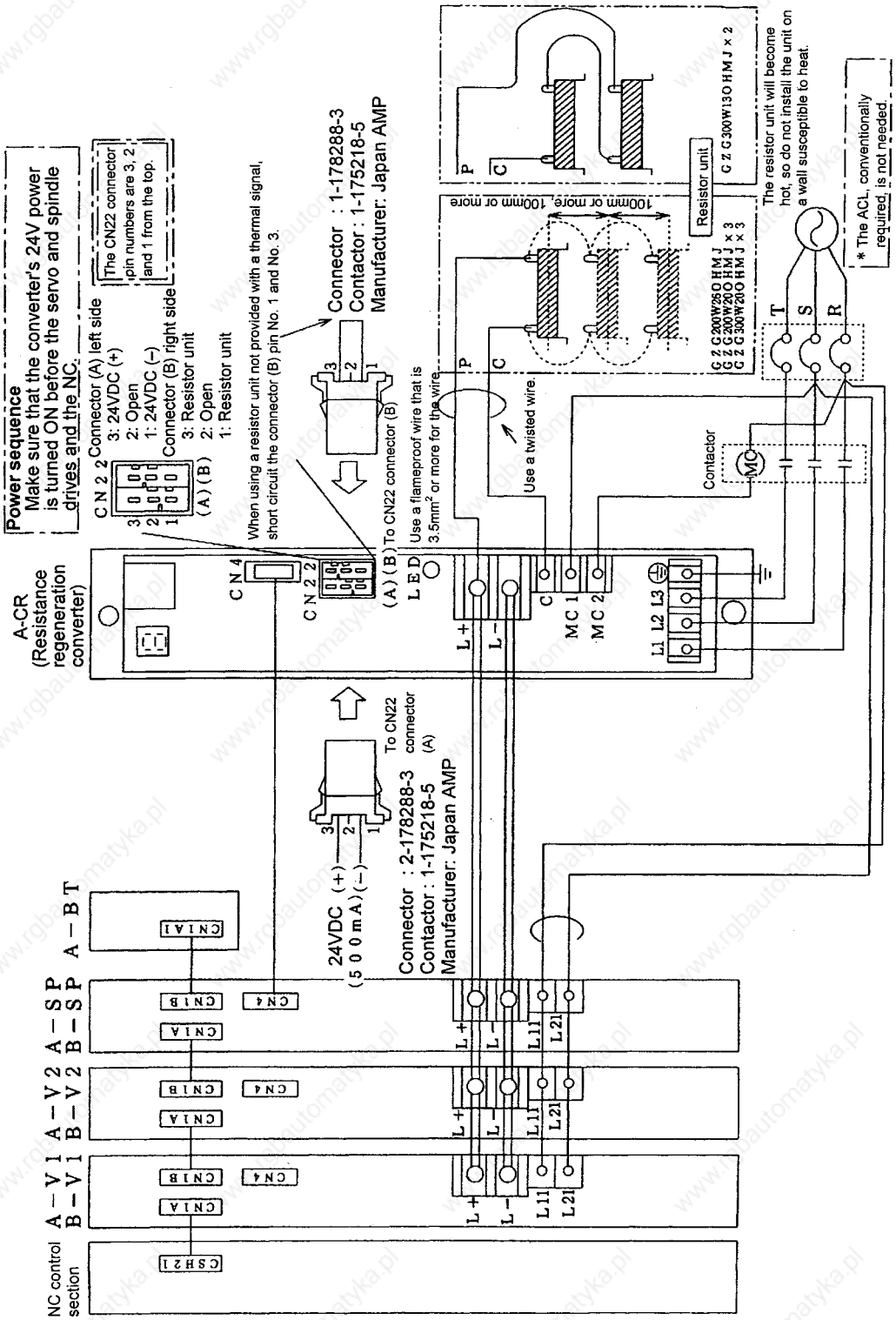

(2) For MR-RB type resistor unit

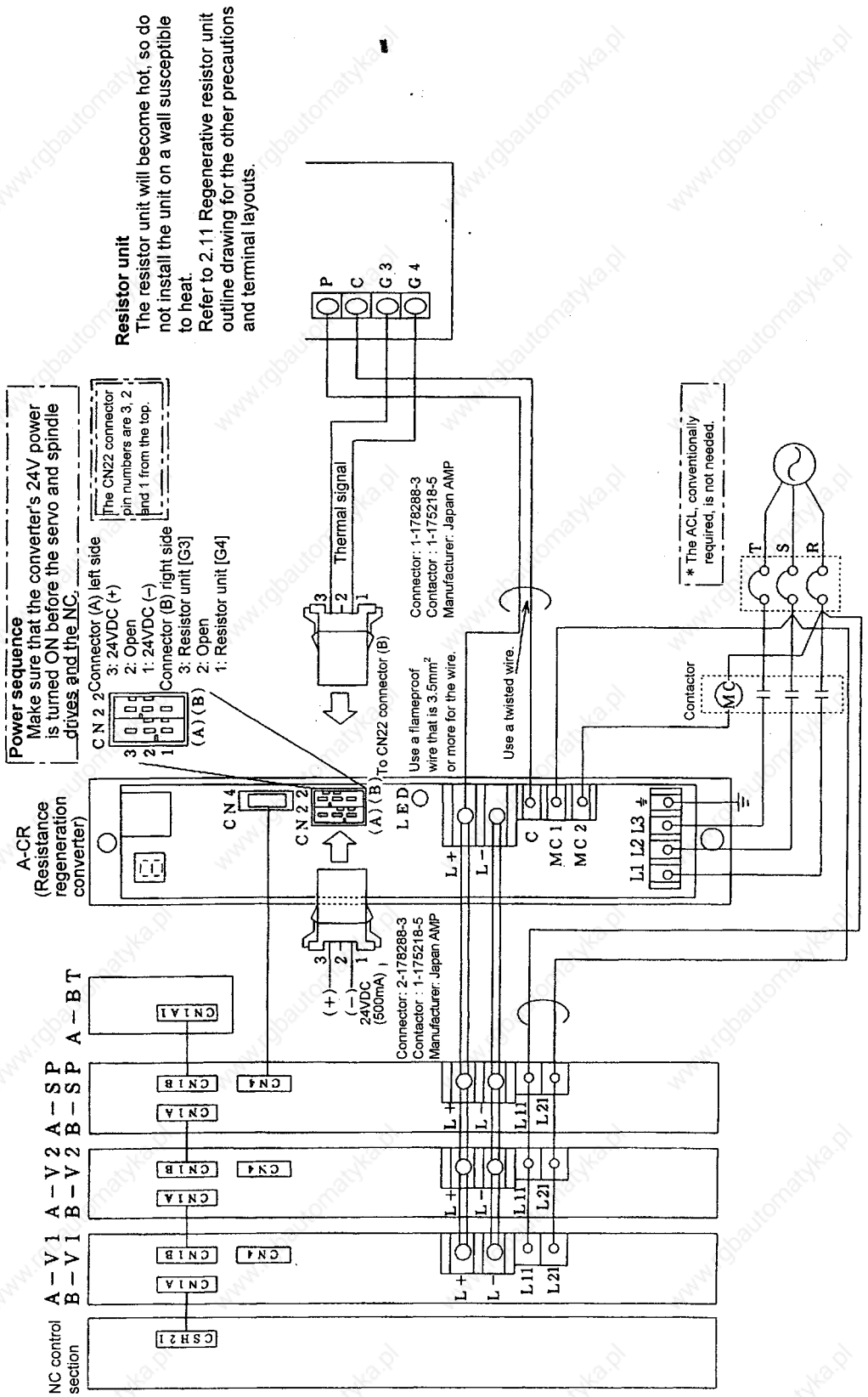

(3) For R-UNIT type resistor unit

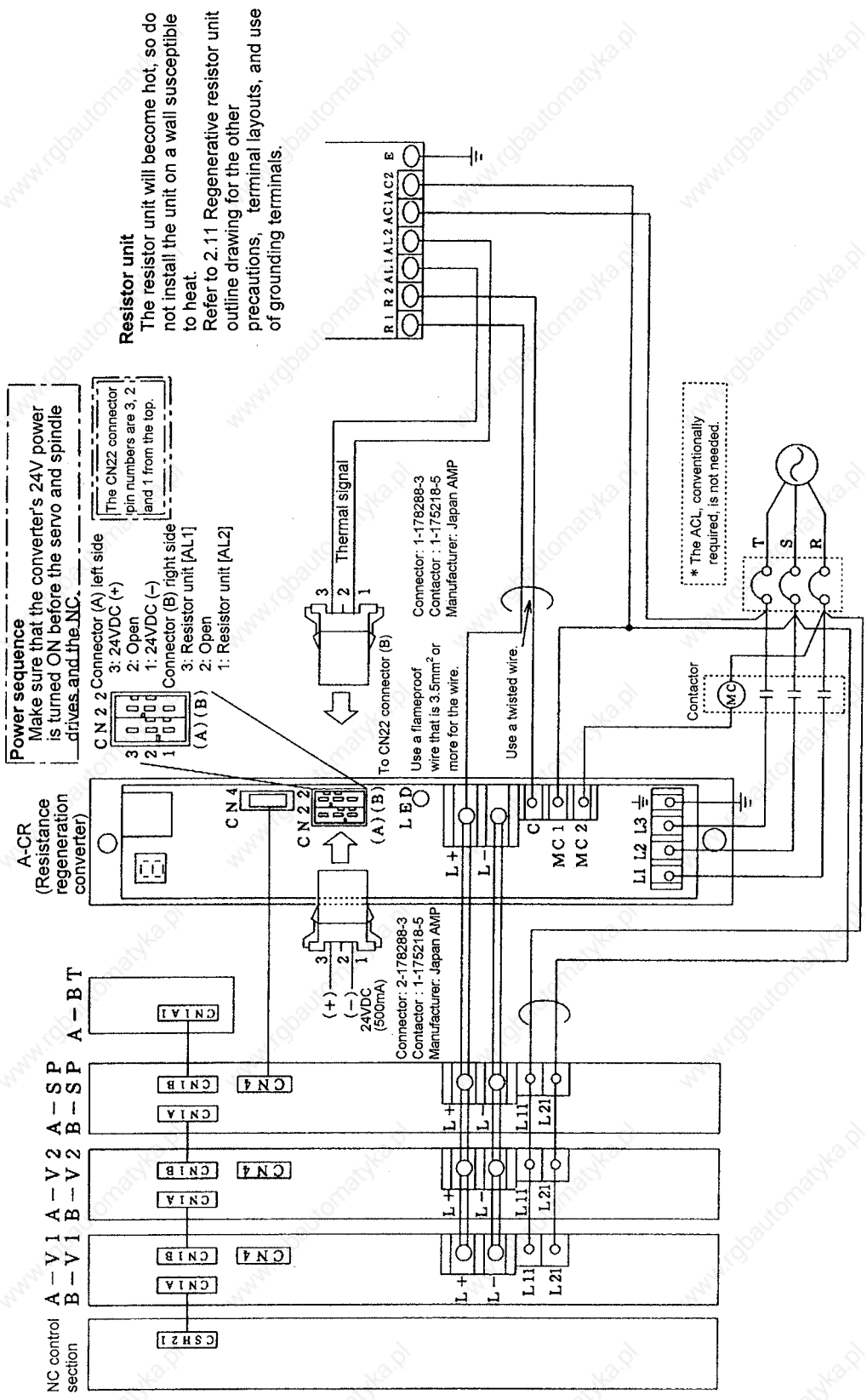

2.11 Regenerative resistor unit outline drawing

⚠ CAUTION

Non-designated combinations of the regeneration option and servo amplifier cannot be used.
Failure to observe this could lead to fires.

Fig. 1

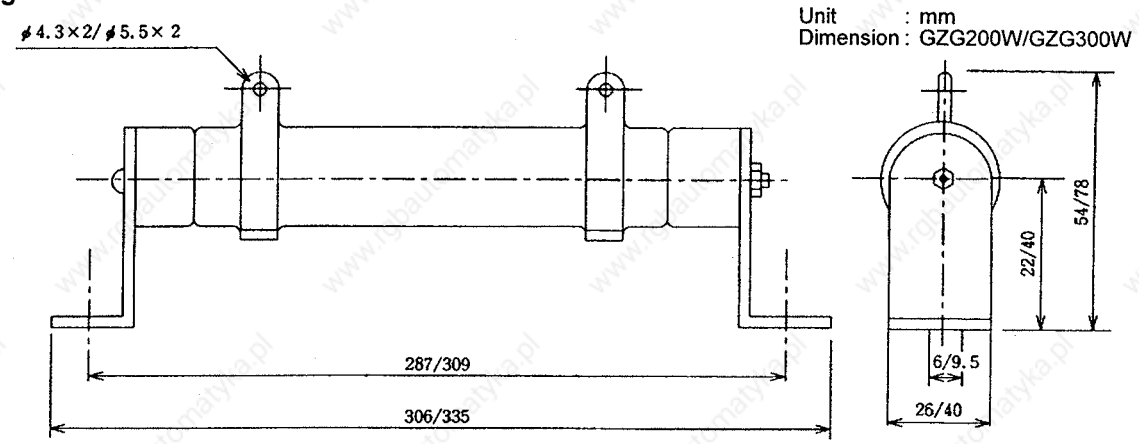

Note. With models that use two or more resistors in a row, install the units with sufficient space between them. (Guideline: 100mm or more)

Fig. 2

MR-RB30

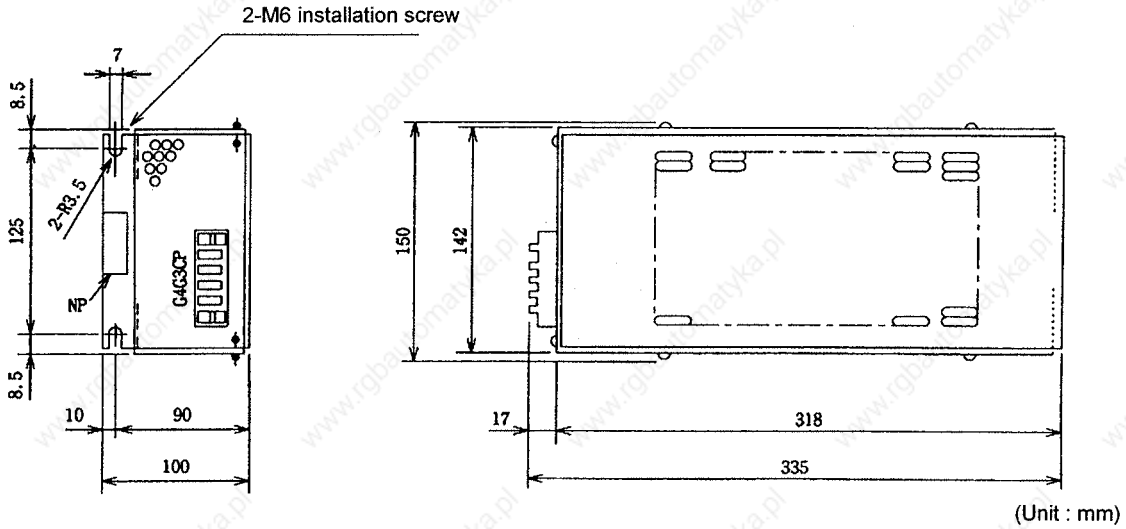

(Unit : mm)

Installation method

The installation direction is either A or B shown below.

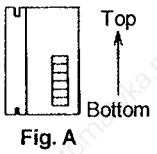

Fig. A

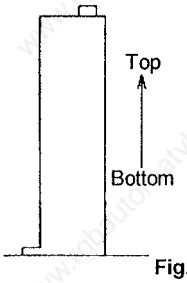

Fig. B

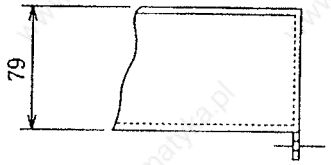

Fig. 3

MR-RB50 (500W) Weight: 5.6kg

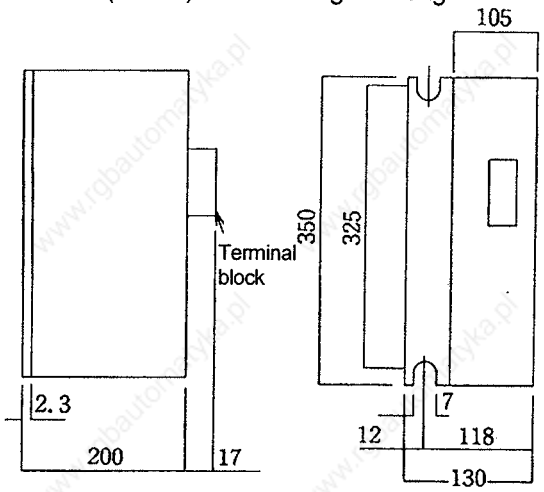

Note) Forcibly cool with a cooling fan (approx. 3.5m/s or more, □92).

Fig. 4

R-UNIT-1, R-UNIT-2

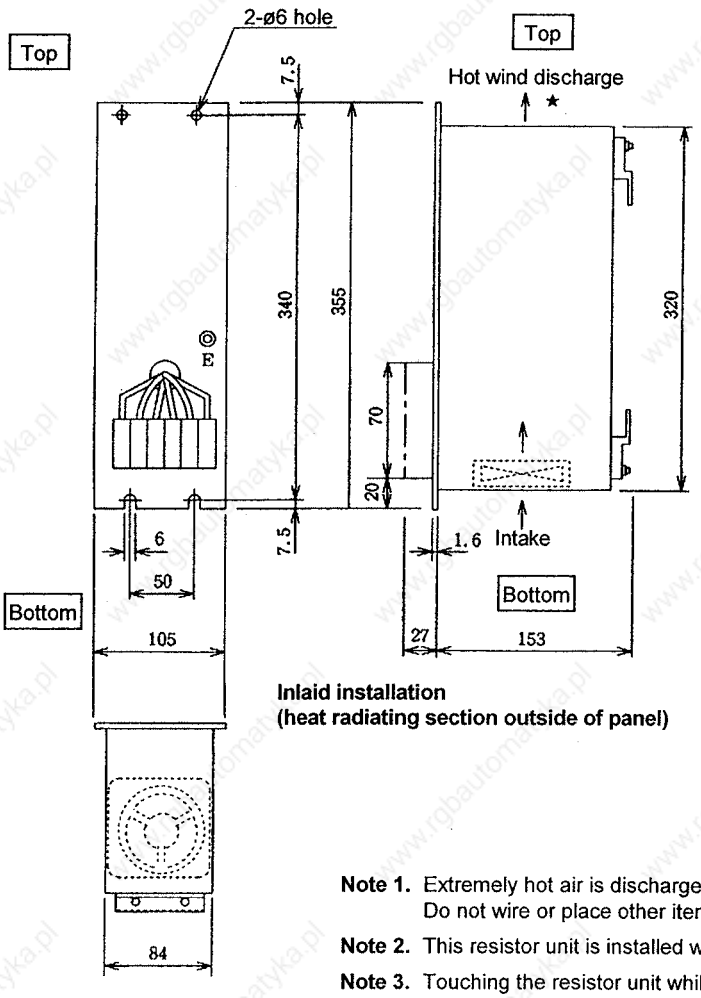

Inlaid installation
(heat radiating section outside of panel)

Terminal layout

R1	R2	AL1	AL2	AC1	AC2

Terminal screw size
M4 x 0.7 screw

Applicable crimp terminal
Bare round type up to 5.5-4

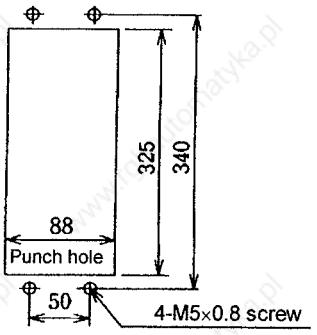

Installation hole dimensions for inlaid installation

Note 1. Extremely hot air is discharged from the sections marked with a ★. Do not wire or place other items here.

Note 2. This resistor unit is installed with the Top up and the Bottom down.

Note 3. Touching the resistor unit while it is hot could lead to burns. Install a protective cover, or consider the installation position so that workers will not touch the unit.

Fig. 5

R-UNIT-3

Inlaid installation (heat radiating section outside of panel)

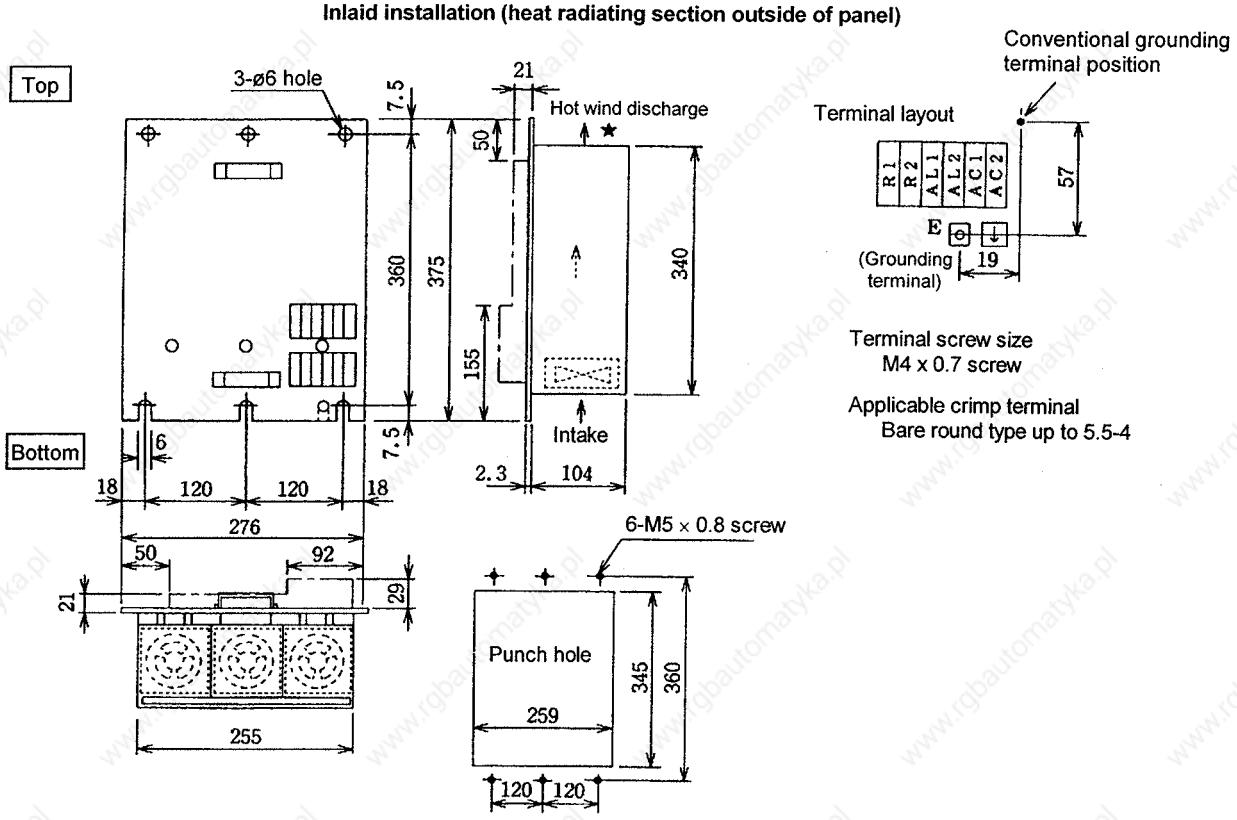

Installation hole dimensions for inlaid installation

Note 1. The ventilation area is approx. 100 × 120.
Note 2. Attach packing at the position where the flange is installed.
Note 3. Extremely hot air is discharged from the sections marked with a ★.
Do not wire or place other items here.
Note 4. This resistor unit is installed with the Top up and the Bottom down.
Note 5. Touching the resistor unit while it is hot could lead to burns.
Install a protective cover, or consider the installation position so that workers will not touch the unit.

III. MDS-A-Vx, MDS-B-Vx
Servo System Section

1. Outline

Outline of MDS servo system

1. The converter that was conventionally built into the MR-S servo drive unit has been congregated in the power supply unit and standardized with the drive unit for other axes. This allows a great reduction in size and weight.
2. By using a high-speed CPU and 100,000 pulse/rev. (max. 3000rpm) submicron detector as a standard, high-speed and accurate machining is possible.
3. By using the same feedback interface for the detector, an interface PCB does not need to be prepared for each specification (scale feed back, submicron, absolute position detection, etc.).
4. The following models have been added to the line up with the changes from the MDS-A-Vx Series to the MDS-B-Vx Series.
   The 110/150 servo drive unit has been added to MDS-B-V1.
   The 4535/4520 servo drive unit has been added to MDS-B-V2.

2. Motor

2.1 Outline

Outline of motor for MDS-A-Vx, MDS-B-Vx servo system

(1) A high precision 100,000 pulse /rev. detector has been incorporated as a standard.
(2) The differences with the conventional motors for the M300 series are as follow:
   a. All models have an oil seal.
   b. The wiring for the thermal protector has been placed inside the detector's cannon plug.
   c. Conventionally, the terminal box type could be handled even with the standard cannon connector method motor by using special specifications, but this is not possible with the MDS-A/B-Vx series.

2.2 Model configuration

HA motor model configuration

HA □ □ □ □ — □ □ □ □

D5 : IP65
D7 : IP67
No symbol : IP54 (Note that the 11K2/15k2 is equivalent to IP44.)

R : HA303, HA700, HA703, HA900 sealed type terminal box
No symbol : Other

S : Shaft end with oil seal

T : Tapered shaft (applicable only to HA23, 33)
No symbol : Straight shaft (other than HA40, 43, 80, 83)

Motor	Symbol	Shaft
HA23, 33	T	Tapered
	None	Straight
HA40, 80, 43, 83	None	Tapered
	S	Straight

B : With electromagnetic brake
No symbol : No electromagnetic brake

C : Main circuit cannon connector type
No symbol : Main circuit terminal box type

N : Motor for M500 Series
NL : Low inertia motor for M500 Series
L : Conventional low inertia motor (Already changed to the same specification NL type)
No symbol : Conventional motor

Motor power class

N-type 2000r/min		N-type 3000r/min		L-type 2000r/min		L-type 3000r/min	
Motor	kW	Motor	kW	Motor	kW	Motor	kW
40	0.5	053	0.05	50	0.5	53	0.5
80	1.0	13	0.1	100	1.0	103	1.0
100	2.0	23	0.3	150	1.5	153	1.5
200	3.5	33	0.45	200	2.0	203	2.0
300	4.5	43	0.5	300	3.0	303	3.0
700	7.0	83	1.0	500	5.0	503	5.0
900	9.0	103	2.0	-LH11K2	11.0		
		203	3.5	-LH15K2	15.0		
		303	4.5				
		703	7.0				

2.3 Main equipment list

HA motor main equipment

Maximum speed		2000r/min			3000r/min				
Item \ Motor model		HA40N HA80N	HA100N HA200N HA300N	HA700N HA900N	HA053 HA13	HA23N HA33N	HA43N HA83N	HA103N HA203N	HA303N HA703N
Oil seal	Presence	○	○	○	○	○	○	○	○
	Absence	×	×	×	×	×	×	×	×
Shaft end	Straight shaft	△	○	○	○	○	△	○	○
	Tapered shaft	○	×	×	×	○	○	×	×
Electro-magnetic brake	Presence	○	○	○	○	○	○	○	○
	Absence	○	○	○	○	○	○	○	○
Connec-tor type	Cannon connector	○	○	△	○	○	○	○	×
	Terminal box	×	×	○	×	×	×	×	○
IP65/67 compatible		△	△	×	×	△	△	△	×

○ : Standard product △ : Special product × : No specification

Maximum speed		2000r/min			3000r/min		
Item \ Motor model		HA50NL HA100NL HA150NL	HA200NL HA300NL HA500NL	HA-LH11K2 HA-LH15K2	HA53NL HA103NL HA153NL	HA203NL HA303NL	HA503NL
Oil seal	Presence	○	○	○	○	○	○
	Absence	×	×	×	×	×	×
Shaft end	Straight shaft	○	○	○	○	○	○
	Tapered shaft	○	×	×	○	×	×
Electro-magnetic brake	Presence	×	×	×	×	×	×
	Absence	○	○	○	○	○	○
Connec-tor type	Cannon connector	○	○	×	○	○	×
	Terminal box	×	×	○	×	×	○
IP65/67 compatible		×	×	×	×	×	×

○ : Standard product △ : Special product × : No specification

2.4 Specifications list

Servomotor specifications list

Item \ Motor model				HA40N	HA80N	HA100N	HA200N	HA300N	HA700N	HA900N	HA053
Motor characteristics during rated speed	Rated output		kW	0.5	1.0	2.0	3.5	4.5	7	9	0.05
	Rated torque		N·m	2.39	4.78	9.55	16.7	21.5	33.4	43.0	0.16
Stall torque			N·m	2.94	5.88	13.7	22.6	37.3	49.0	58.8	0.25
Maximum torque for drive unit combination			N·m	14.2	25.5	42.0	59.8	87.6	120	153	0.69
Rated speed			r/min	2000							3000
Motor inertia	Without brake	Jm	$\times10^{-4}$kg·m^2	9.8	19.6	68.6	131.0	192.0	254.0	319.0	0.18
		GD	$\times10^{-4}$kg·m^2	39.2	78.4	274	525	768	1015	1274	0.74
	With brake	Jm	$\times10^{-4}$kg·m^2	10.8	20.6	72.6	135.0	196.0	258.0	323.0	0.20
		GD	$\times10^{-4}$kg·m^2	41.9	81.1	291	542	785	1032	1291	0.80
Weight	Without brake		kg	8	12	21	32	43	56	80	1.1
	With brake		kg	10	14	27	38	49	62	85	1.5
Equipped parts	Thermal protector			Built-in motor							
	Shaft through-hole section oil seal			Provided							
	Electromagnetic brake			24VDC 15W 5.9N·m		24VDC 15W 29.4N·m					24VDC 5.2W 0.39N·m
	Cable connector			Cannon connector					Terminal box		Cannon connector
	Motor shaft end detector			Detector model name should be specified.							*1
Tolerable shaft end radial load			kg	Tapered shaft 40		210				250	8
				Straight shaft 100							
Operating environment				Ambient temperature: 0 to 40°C, free from oil and water, no condensation							

Item \ Motor model				HA13	HA23N	HA33N	HA43N	HA83N	HA103N	HA203N	HA303N	HA703N
Motor characteristics during rated speed	Rated output		kW	0.1	0.3	0.45	0.5	1.0	2.0	3.5	4.5	7.0
	Rated torque		N·m	0.32	0.95	1.43	1.60	3.19	6.37	11.2	14.3	22.3
Stall torque			N·m	0.49	0.98	1.96	2.94	5.88	13.7	22.6	37.3	49.0
Maximum torque for drive unit combination			N·m	1.37	2.7	5.59	10.2	19.2	40.2	55.9	79.8	105
Rated speed			r/min	3000								
Motor inertia	Without brake	Jm	$\times10^{-4}$kg·m^2	0.36	0.98	1.96	9.8	19.6	68.6	131.0	192.0	254.0
		GD	$\times10^{-4}$kg·m^2	1.43	3.92	7.84	39.2	78.4	274	525	768	1015
	With brake	Jm	$\times10^{-4}$kg·m^2	0.37	1.08	2.06	10.8	20.6	72.6	135.0	196.0	258.0
		GD	$\times10^{-4}$kg·m^2	1.49	4.72	8.64	41.9	81.1	291	542	785	1032
Weight	Without brake		kg	1.5	3.5	4.5	8	12	21	32	43	56
	With brake		kg	1.9	4.5	5.5	10	14	27	38	49	62
Equipped parts	Thermal protector				Built-in motor							
	Shaft through-hole section oil seal			Provided								
	Electromagnetic brake			24VDC 5.2W 0.39N·m	24VDC 12W 2.0N·m		24VDC 15W 5.9N·m		24VDC 25W 29.4N·m			
	Cable connector			Cannon connector							Terminal box	
	Motor shaft end detector			*1	Detector model name should be specified.							
Tolerable shaft end radial load			kg	8	25		Tapered shaft 40		210			
							Straight shaft 100					
Operating environment				Ambient temperature: 0 to 40°C, free from oil and water, no condensation								

(Note) *1: Detector model name need not be specified.

Low inertia servomotor specifications list

Item \ Motor model				HA50NL	HA100NL	HA150NL	HA200NL	HA300NL	HA500NL	HA-LH11K2
Motor characteristics during rated speed	Rated output	kW		0.5	1	1.5	2	3	5	11
	Rated torque	N·m		2.39	4.78	7.16	9.55	14.3	23.8	52.5
Stall torque		N·m		2.94	5.88	8.83	13.7	22.6	37.3	70.6
Maximum torque for drive unit combination		N·m		13.0	20.9	31.4	31.7	52.0	72.6	158
Rated speed		r/min		2000						
Motor inertia	Without brake	Jm	$\times10^{-4}$kg·m^2	2.75	5.49	8.24	19.6	29.4	88.3	118.0
		GD	$\times10^{-4}$kg·m^2	11	22	33	78.4	118	353	470
Weight	Without brake	kg		6.5	9.5	12.5	16	22	35	70
Equipped parts	Shaft through-hole section oil seal			Provided						
	Cable connector			Cannon connector						Terminal box
	Motor shaft end detector			Detector model name should be specified (corresponding to INC or ABS).						
Tolerable shaft end radial load		kg		Tapered shaft 40			210		250	
				Straight shaft 100						
Operating environment				Ambient temperature: 0 to 40°C, free from oil and water, no condensation.						

Item \ Motor model				HA-LH15K2	HA53NL	HA103NL	HA153NL	HA203NL	HA303NL	HA503NL
Motor characteristics during rated speed	Rated output	kW		15	0.5	1	1.5	2	3	5
	Rated torque	N·m		71.6	1.60	3.19	4.77	6.36	9.55	16.0
Stall torque		N·m		91.7	2.94	5.88	8.82	13.7	22.5	37.3
Maximum torque for drive unit combination		N·m		215	14.1	22.5	22.8	37	60	78
Rated speed		r/min (rpm)		3000						
Motor inertia	Without brake	Jm	$\times10^{-4}$kg·m^2	290.0	2.7	5.5	8.2	19.6	29.4	88.3
		GD	$\times10^{-4}$kg·m^2	1160	11	22	33	78.4	117.6	352.8
Weight	Without brake	kg		108	6.5	9.5	12.5	16	22	35
Equipped parts	Shaft through-hole section oil seal			Provided						
	Cable connector			Terminal box	Cannon connector					Terminal box
	Motor shaft end detector			Detector model name should be specified (corresponding to INC or ABS).						
Tolerable shaft end radial load		kg		300	Tapered shaft 40			210		250
					Straight shaft 100					
Operating environment				Ambient temperature: 0 to 40°C, free from oil and water, no condensation.						

2.5 Outline dimension drawing

Motor model	Dimensions		Weight (kg)	Tolerable shaft end radial load (kg)	Shaft shape
	A	B			
HA053C-S	118	43	1.1	8	Straight shaft
HA13C-S	135	60	1.5		

Encoder	
INC	OHE2500

Not compatible with ABS

Notes: 1. It is recommended that the cannon connector be mounted in a downward orientation to improve its splash-proof performance.
2. The wiring side plug is optional. It is only provided when ordered.
3. The detector connector direction cannot be changed.

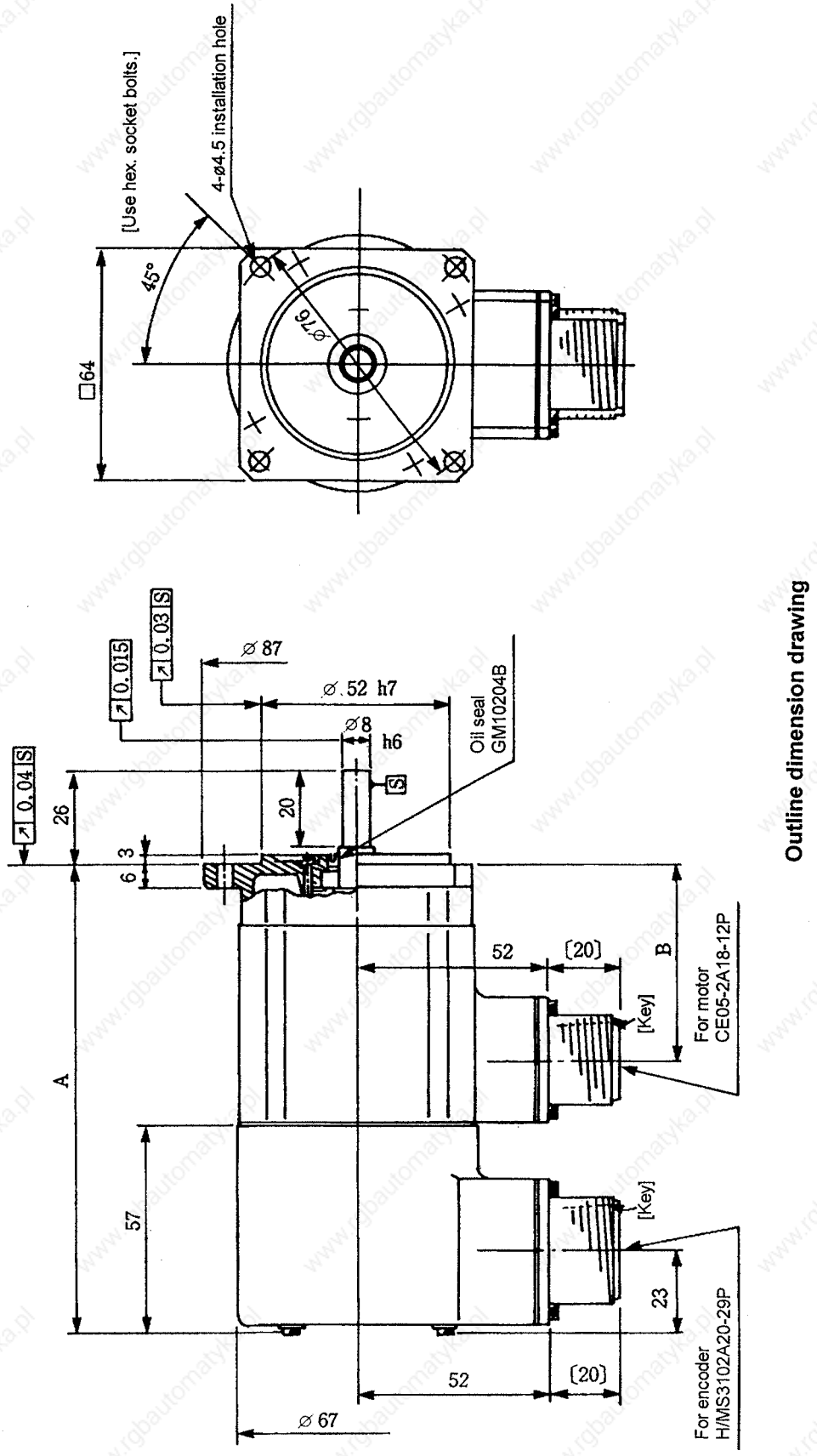

Outline dimension drawing

Motor model	Dimensions		Weight (kg)	Tolerable shaft end radial load (kg)	Shaft shape	Electromagnetic brake
	A	B				
HA053CB-S	156	81	1.5	8	Straight shaft	24VDC 0.39N·m
HA13CB-S	173	98	1.9			

Encoder	
INC	OHE2500

Not compatible with AMS

Notes: 1. It is recommended that the cannon connector be mounted in a downward orientation to improve its splash-proof performance.
2. The wiring side plug is optional. It is only provided when ordered.
3. The detector connector direction cannot be changed.

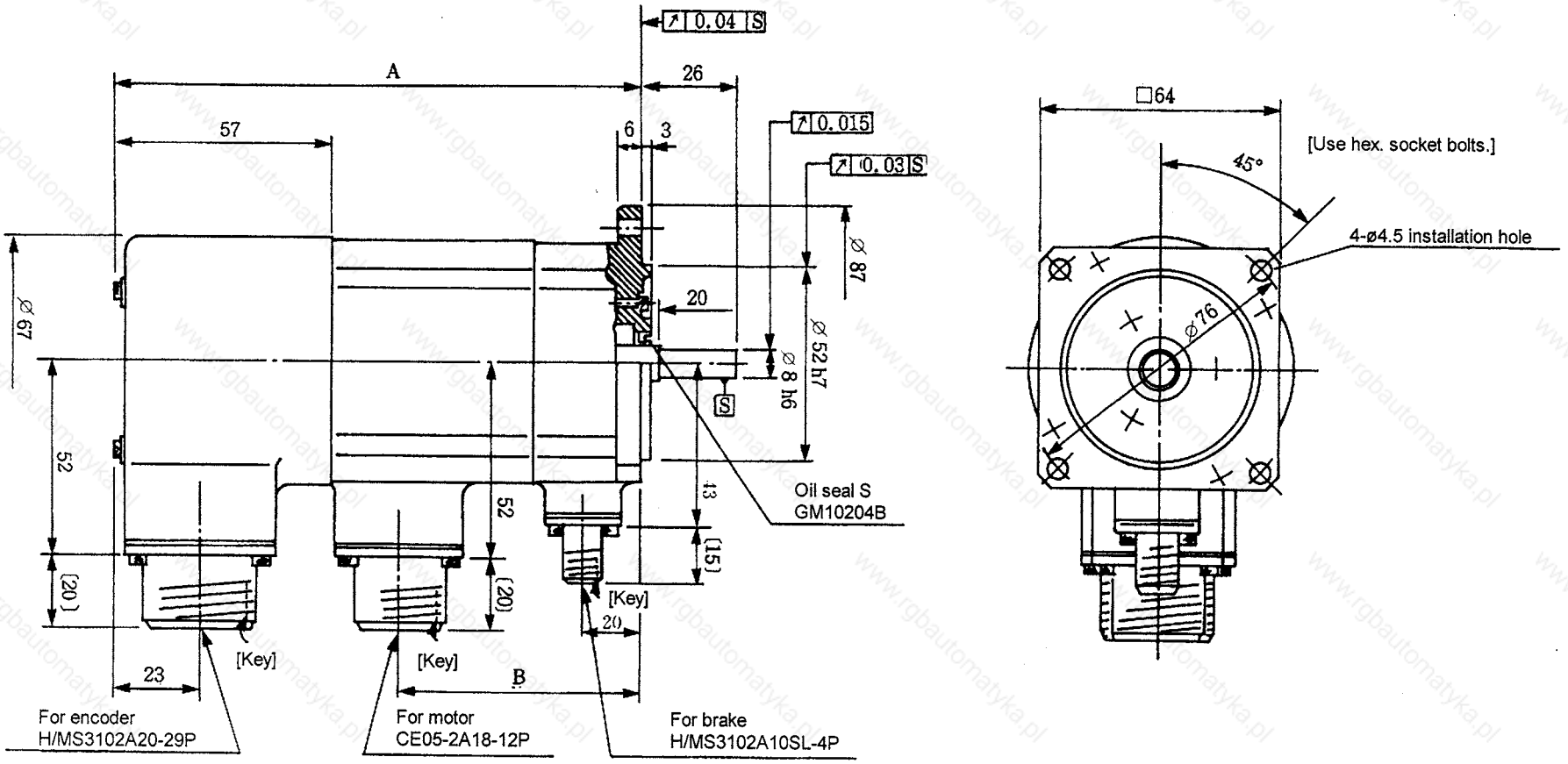

Outline dimension drawing

Motor model	Dimensions		Weight (kg)	Tolerable shaft end radial load (kg)	Shaft shape	Electro-magnetic brake
	A	B				
HA23NC-TS	125	81	3.5	25	Tapered shaft	24VDC 1.96N·m
HA33NC-TS	155	111	4.5			
HA23NC-S	125	81	3.5		Straight shaft	
HA33NC-S	155	111	4.5			

Conventional encoder		
Spec.	Model name	Dimension C
INC	OHE25K-85	70
ABS	OHA25K-85	70

Serial encoder		
Spec.	Model name	Dimension C
INC	OSE104S/OSE105S	45
ABS	OSA104S/OSA105S	45

Notes: 1. It is recommended that the cannon connector be mounted in a downward orientation to improve its splash-proof performance.
2. The wiring side plug is optional. It is only provided when ordered.

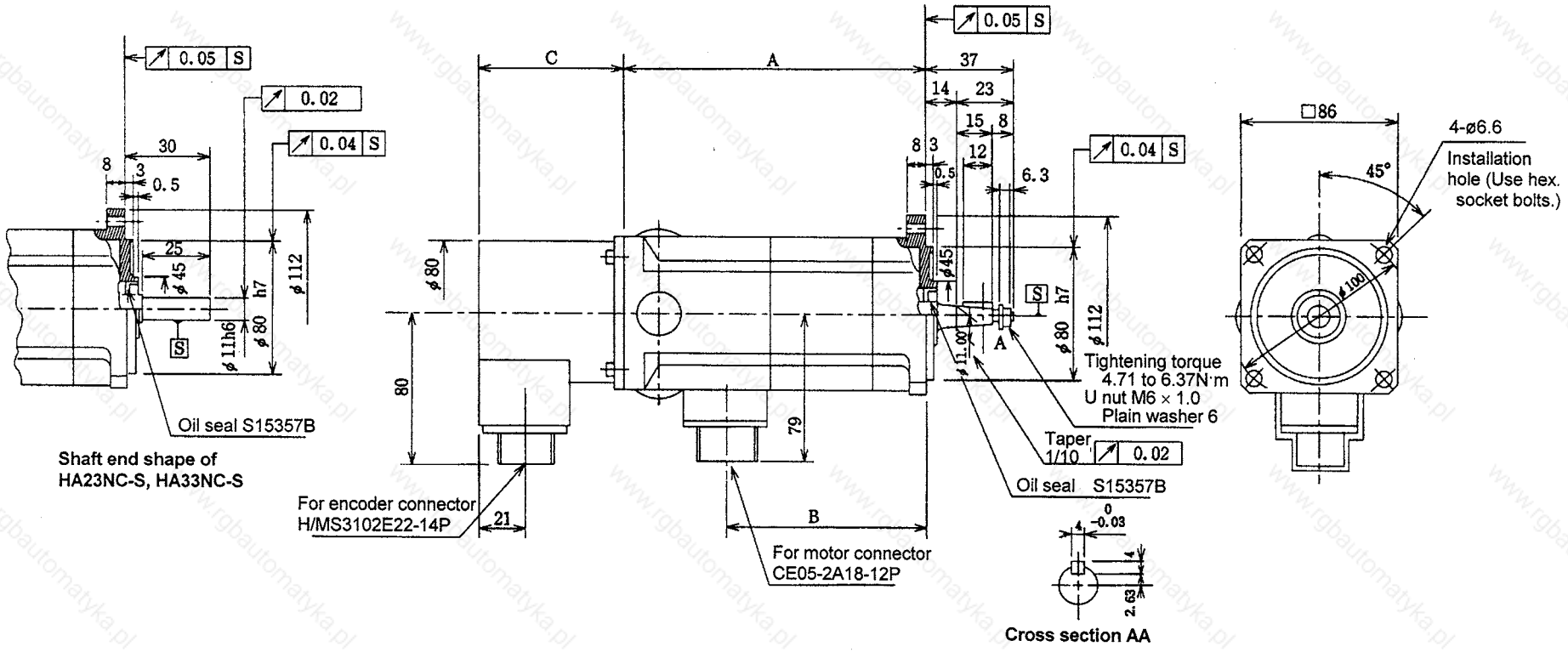

Outline dimension drawing

Motor model	Dimensions		Weight (kg)	Tolerable shaft end radial load (kg)	Shaft shape	Electro-magnetic brake
	A	B				
HA23NCB-TS	162	81	4.5	25	Tapered shaft	24VDC 1.92N·m
HA33NCB-TS	192	111	5.5			
HA23NCB-S	162	81	4.5		Straight shaft	
HA33NCB-S	192	111	5.5			

Conventional encoder		
Spec.	Model name	Dimension C
INC	OHE25K-85	70
ABS	OHA25K-85	70

Serial encoder		
Spec.	Model name	Dimension C
INC	OSE104S/OSE105S	45
ABS	OSA104S/OSA105S	45

Notes: 1. It is recommended that the cannon connector be mounted in a downward orientation to improve its splash-proof performance.
2. The wiring side plug is optional. It is only provided when ordered.

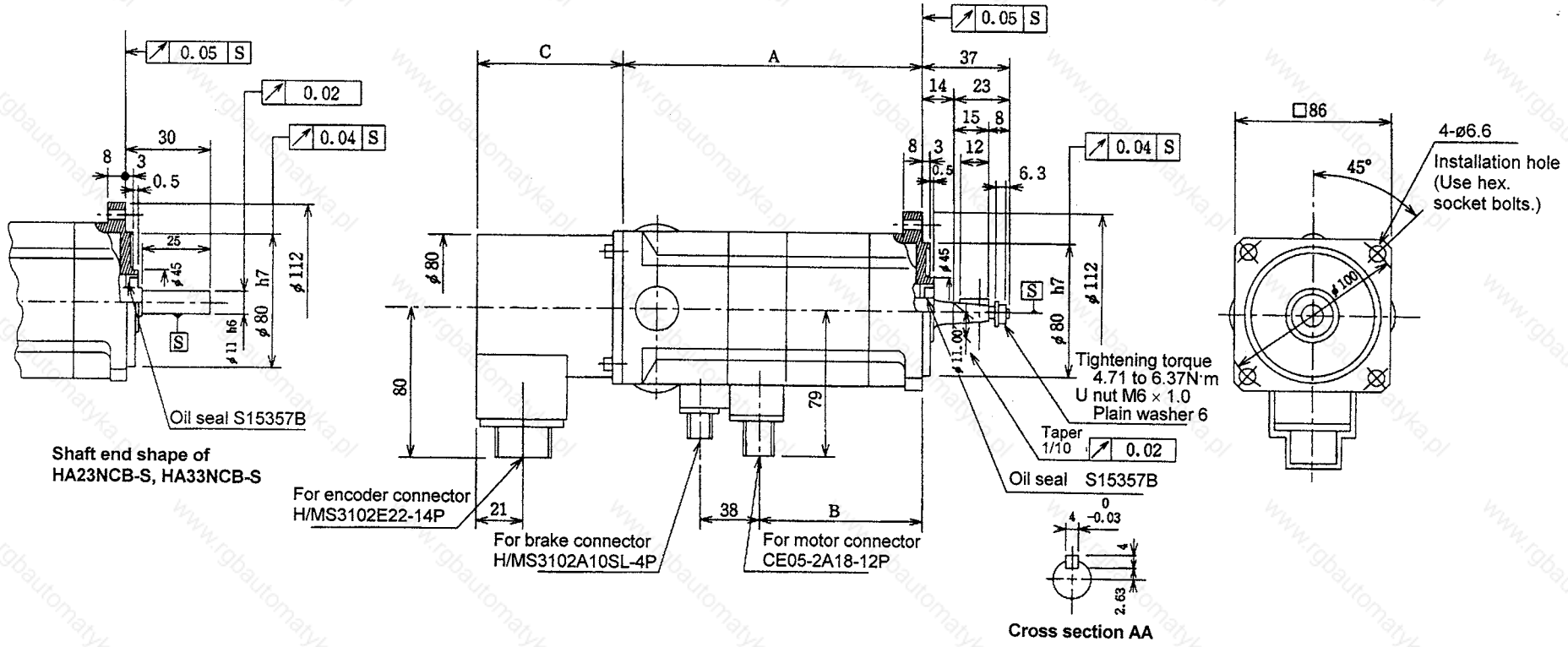

Outline dimension drawing

Motor model	Dimensions		Weight (kg)	Tolerable shaft end radial load (kg)	Shaft shape	Electromagnetic brake
	A	B				
HA40NC-S • HA43NC-S	214	131	8	40	Tapered shaft	None
HA80NC-S • HA83NC-S	254	171	12			
HA40NCB-S • HA43NCB-S	270	131	10			5.88N·m with 24VDC
HA80NCB-S • HA83NCB-S	310	171	14			
HA40NC-SS • HA43NC-SS	214	131	8	100	Straight shaft	None
HA80NC-SS • HA83NC-SS	254	171	12			
HA40NCB-SS • HA43NCB-SS	270	131	10			5.88N·m with 24VDC
HA80NCB-SS • HA83NCB-SS	310	171	14			

Encoder	
INC	OHE25K-6, OSE104, OSE105
ABS	OHA25K-4, OSA104, OSA105

Notes: 1. It is recommended that the cannon connector be mounted in a downward orientation to improve its splash-proof performance.
2. The wiring side plug is optional. It is only provided when ordered.

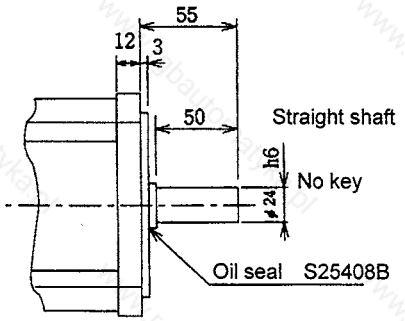

[Use hex. socket bolts.]

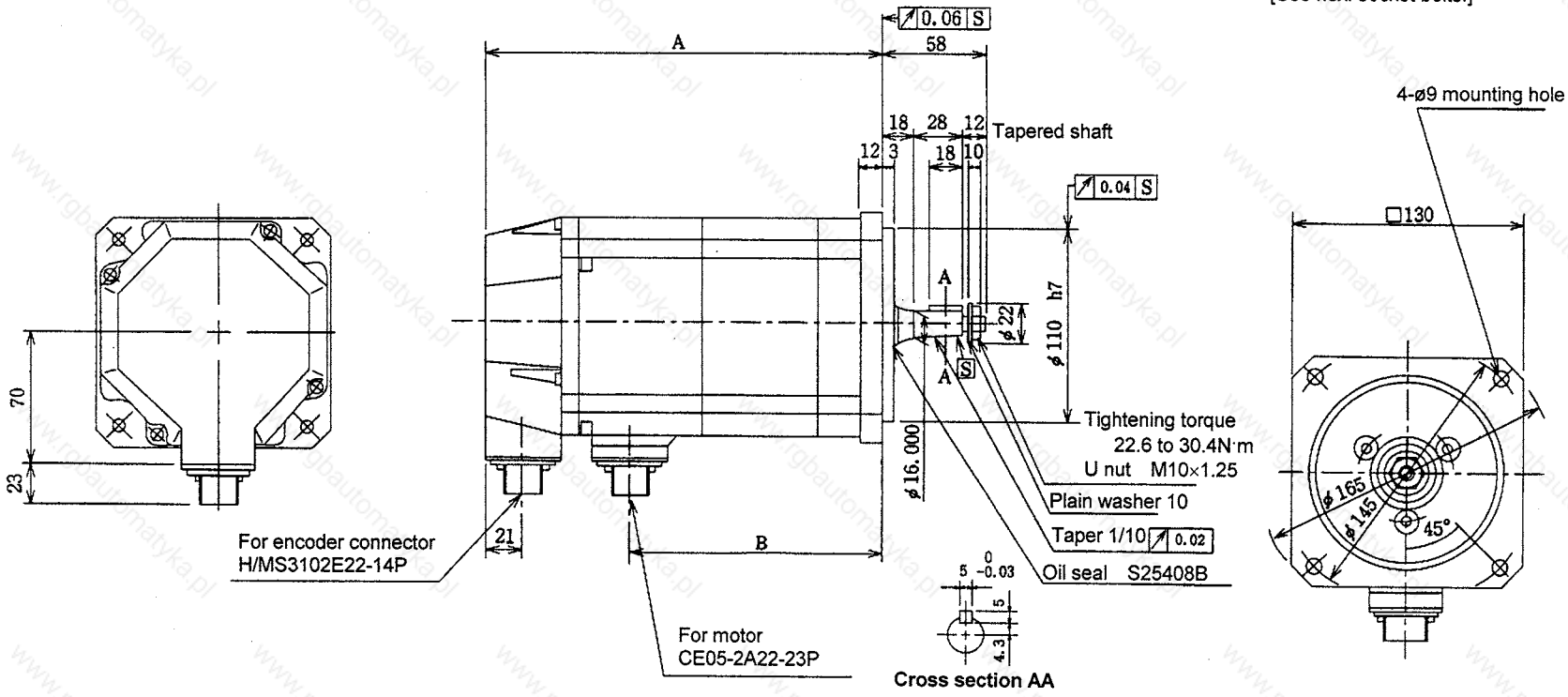

Outline dimension drawing

Motor model	Dimensions		Weight (kg)	Tolerable shaft end radial load (kg)	Shaft shape	Electro-magnetic brake
	A	B				
HA100NC-S • HA103NC-S	260	179	21	210	Straight shaft	None
HA200NC-S • HA203NC-S	328	247	32			
HA300NC-S	396	315	42			
HA100NC-S • HA103NCB-S	336	179	27			29.4N·m with 24VDC
HA200NCB-S • HA203NCB-S	404	247	38			
HA300NCB-S	472	315	47			

Encoder	
INC	OHE25K-6, OSE104, OSE105
ABS	OHA25K-4, OSA104, OSA105

Notes: 1. It is recommended that the cannon connector be mounted in a downward orientation to improve its splash-proof performance.
2. The wiring side plug is optional. It is only provided when ordered.
3. Holes marked with ※ are screw holes for eyebolt M8 installation.

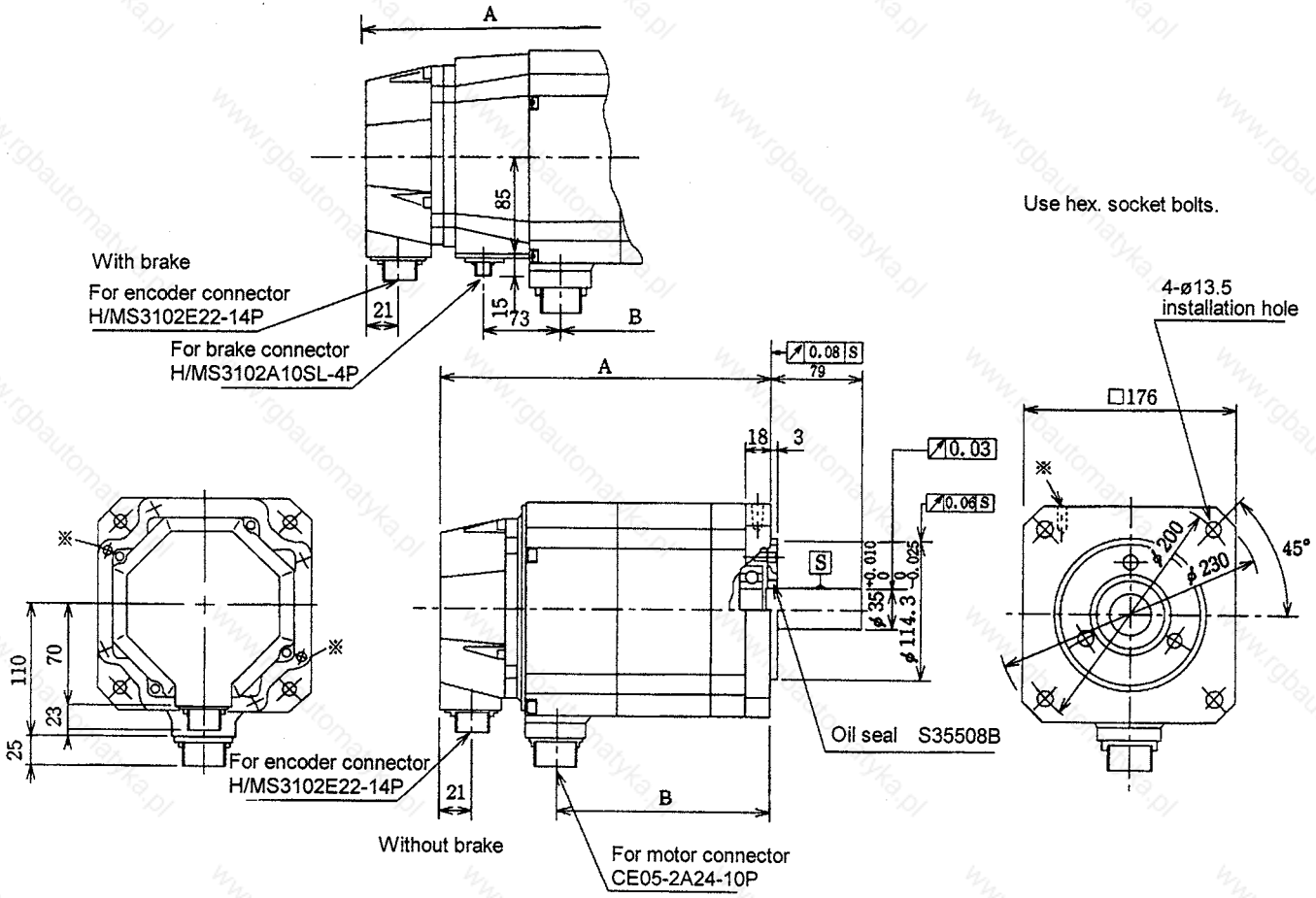

Outline dimension drawing

Motor model	Dimensions		Weight (kg)	Tolerable shaft end radial load (kg)	Shaft shape	Electro-magnetic brake
	A	B				
HA303N-SR	395	280	43	210	Straight shaft	None
HA700N-SR • HA703N-SR	479	364	56			
HA303NB-SR	472	280	49			29.4N·m with 24VDC
HA700NB-SR • HA703NB-SR	556	364	62			

Encoder	
INC	OHE25K-6, OSE104, OSE105
ABS	OHA25K-4, OSA104, OSA105

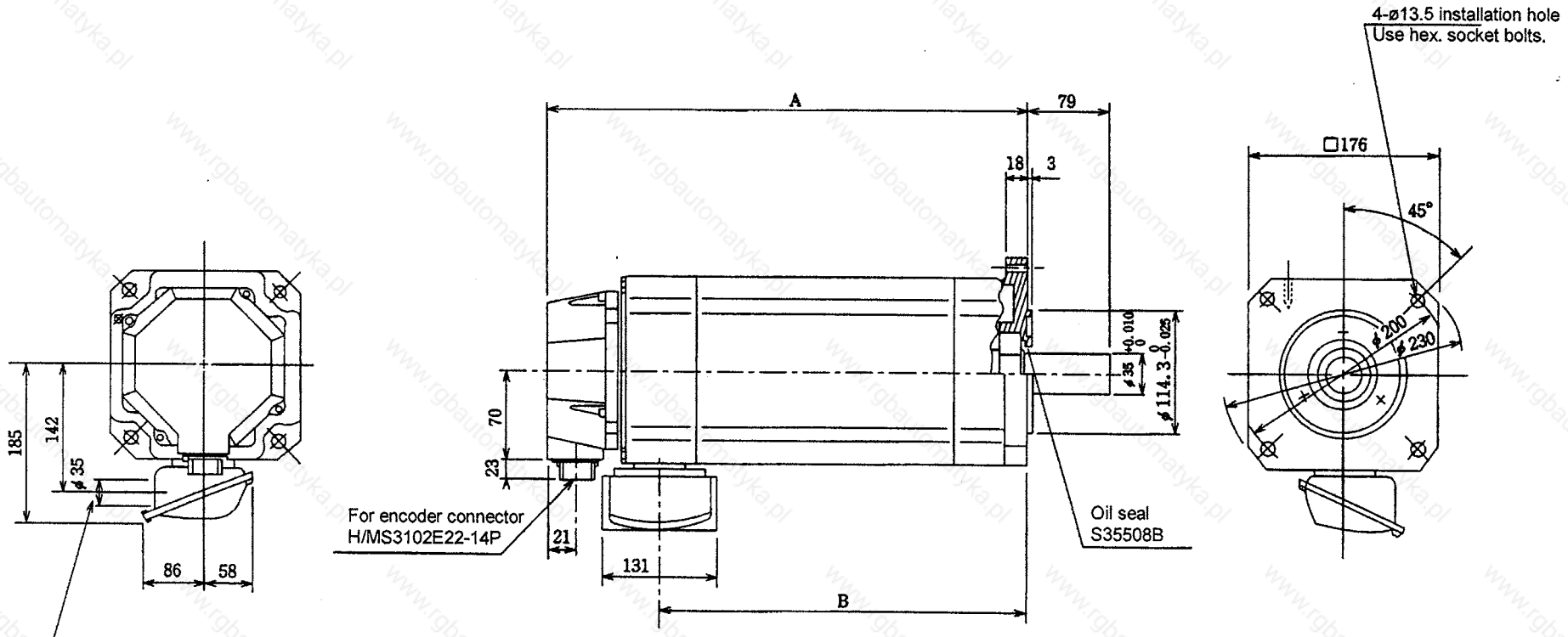

The motor terminal box lead outlet direction can be changed forward/backward/right/left with a 90° angle.
A steel sealed type terminal box is used.

Outline dimension drawing

Motor model	Dimensions		Weight (kg)	Tolerable shaft end radial load (kg)	Shaft shape	Electro-magnetic brake
	A	B				
HA900N-SR	565	450	79	250	Straight shaft	None
HA900NB-SR	642	450	85			29.4N·m with 24VDC

Encoder	
INC	OHE25K-6, OSE104, OSE105
ABS	OHA25K-4, OSA104, OSA105

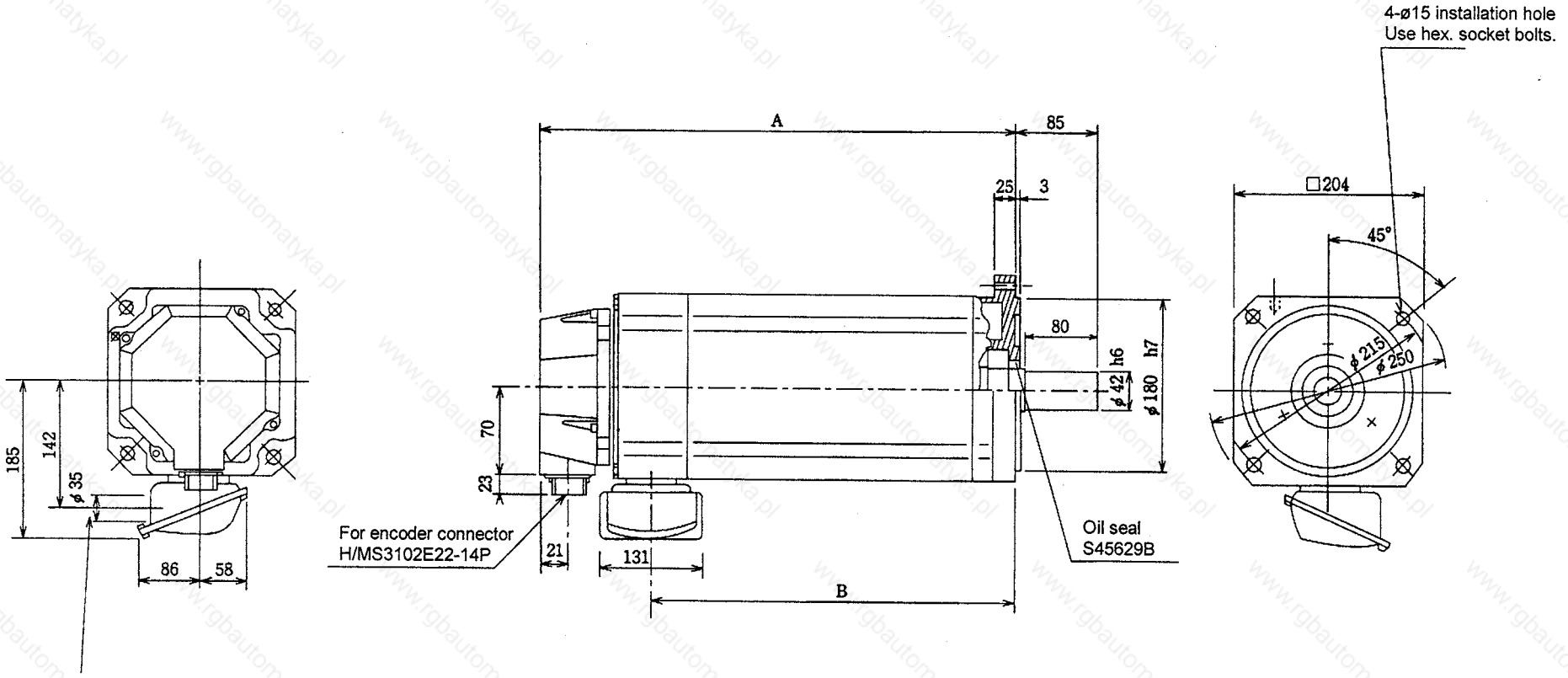

The motor terminal box lead outlet direction can be changed forward/backward/right/left with a 90° angle.
A steel sealed type terminal box is used.

Outline dimension drawing

Motor model	Dimensions A		Dimension B	Weight (kg)	Tolerable shaft end radial load (kg)	Shaft shape
	OHE/OHA type	OSE/ OSA type				
HA50LC-TS・HA53LC-TS	238	213	117	6.5	40	Tapered shaft
HA100LC-TS・HA103LC-TS	278	253	157	9.5		
HA150LC-TS・HA153LC-TS	328	303	207	12.5		
HA50LC-S・HA53LC-S	238	213	117	6.5	100	Straight shaft
HA100LC-S・HA103LC-S	278	253	157	9.5		
HA150LC-S・HA153LC-S	328	303	207	12.5		
HA50NLC-TS・HA53NLC-TS	–	213	117	6.5	40	Tapered shaft
HA100NLC-TS・HA103NLC-TS	–	253	157	9.5		
HA150NLC-TS・HA153NLC-TS	–	303	207	12.5		
HA50NLC-S・HA53NLC-S	–	213	117	6.5	100	Straight shaft
HA100NLC-S・HA103NLC-S	–	253	157	9.5		
HA150NLC-S・HA153NLC-S	–	303	207	12.5		

Conventional encoder		
Spec.	Model name	Dim. C
INC	OHE25K-108	98
ABS	OHA25K-108	98

Serial encoder			
Spec.	Model name	Encoder dim. D	Adaptor dim. E
INC	OSE104S/OSE105S	45	28
ABS	OSA104S/OSA105S	45	28

Notes: 1. It is recommended that the cannon connector be mounted in a downward orientation to improve its splash-proof performance.
2. The wiring side plug is optional. It is only provided when ordered.

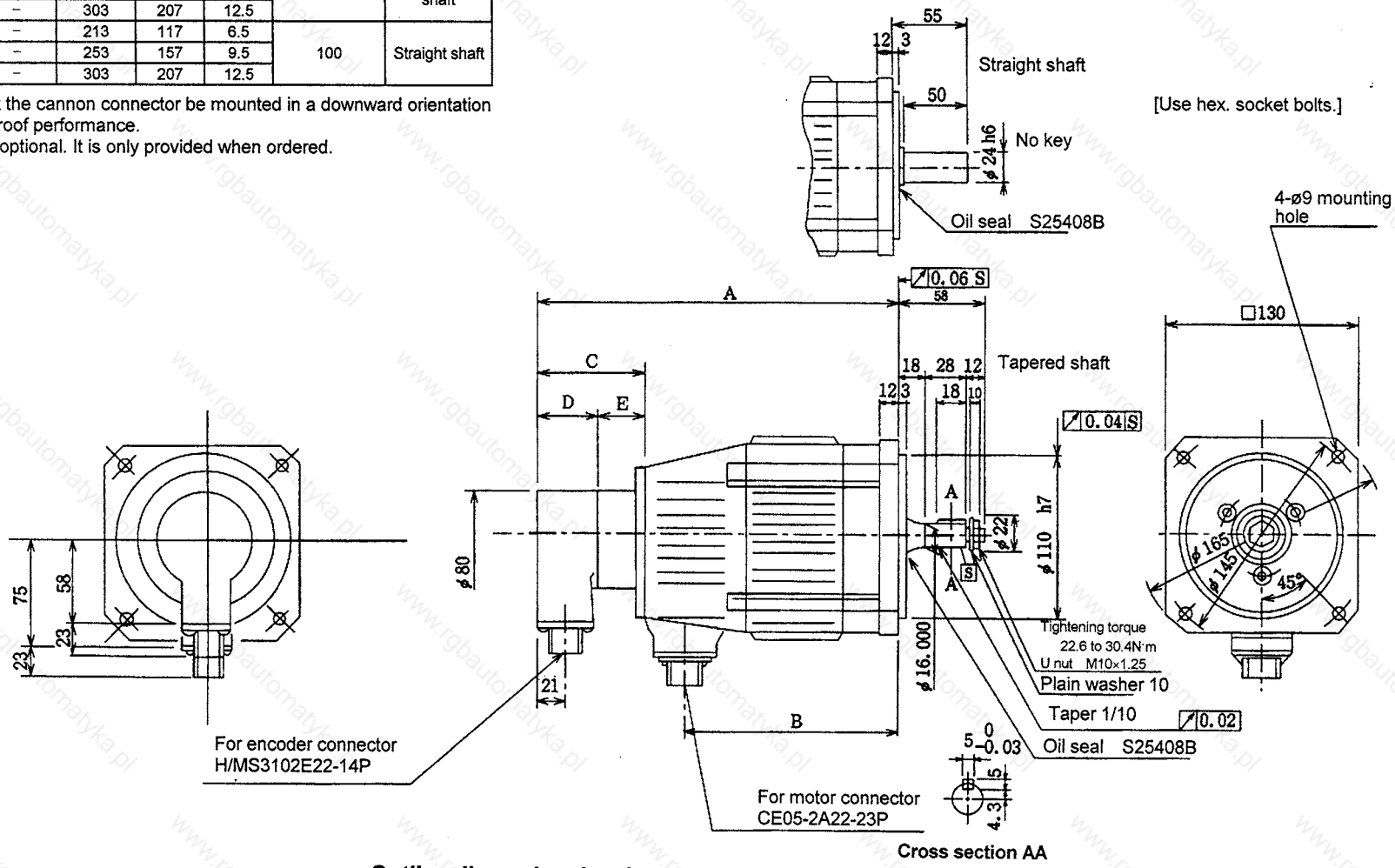

Outline dimension drawing

Motor model	Dimensions A		Dimension B	Weight (kg)	Tolerable shaft end radial load (kg)	Shaft shape
	OHE/OHA type	OSE/OSA type				
HA200LC-S•HA203LC-S	293	268	171	16	210	Straight shaft
HA300LC-S•HA303LC-S	333	308	211	22		
HA200NLC-S•HA203NLC-S	–	268	171	16		Straight shaft
HA300NLC-S•HA303NLC-S	–	308	211	22		

Conventional encoder		
Spec.	Model name	Dim. C
INC	OHE25K-108	98
ABS	OHA25K-108	98

Serial encoder			
Spec.	Model name	Encoder dim. D	Adaptor dim. E
INC	OSE104S/OSE105S	45	28
ABS	OSA104S/OSA105S	45	28

Notes: 1. It is recommended that the cannon connector be mounted in a downward orientation to improve its splash-proof performance.
2. The wiring side plug is optional. It is only provided when ordered.

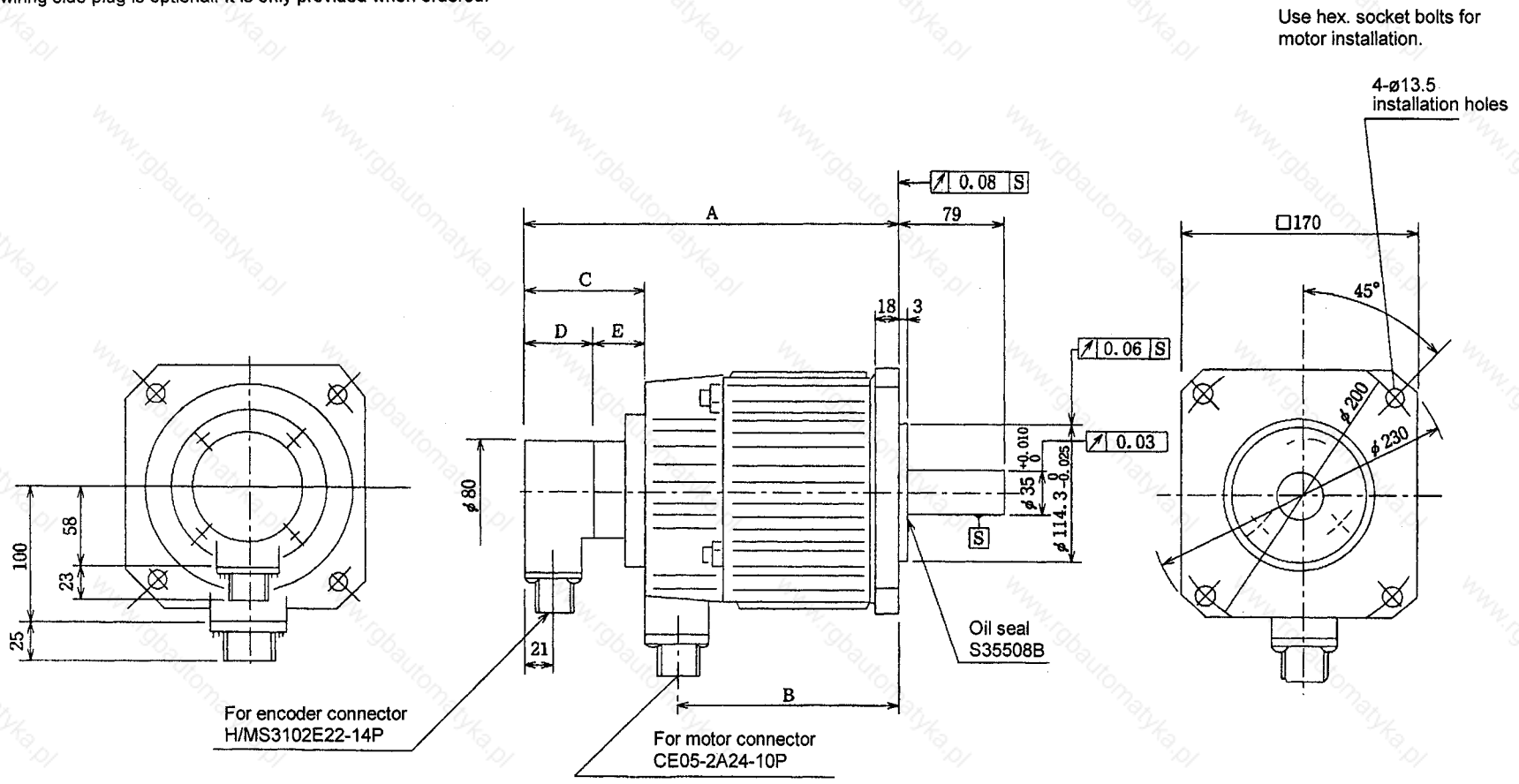

Outline dimension drawing

Motor model	Dimensions A		Dimension B	Weight (kg)	Tolerable shaft end radial load (kg)	Shaft shape
	OHE/OHA type	OSE/OSA type				
HA500LC-S	363	338	249	35	250	Straight shaft
HA500NLC-S	–	338	249	35		Straight shaft

Conventional encoder		
Spec.	Model name	Dim. C
INC	OHE25K-108	98
ABS	OHA25K-108	98

Serial encoder			
Spec.	Model name	Encoder dim. D	Adaptor dim. E
INC	OSE104S/OSE105S	45	28
ABS	OSA104S/OSA105S	45	28

Notes: 1. It is recommended that the cannon connector be mounted in a downward orientation to improve its splash-proof performance.
2. The wiring side plug is optional. It is only provided when ordered.
3. M8 screw holes for suspension bolts are machined in the positions marked ※1 to ※3.

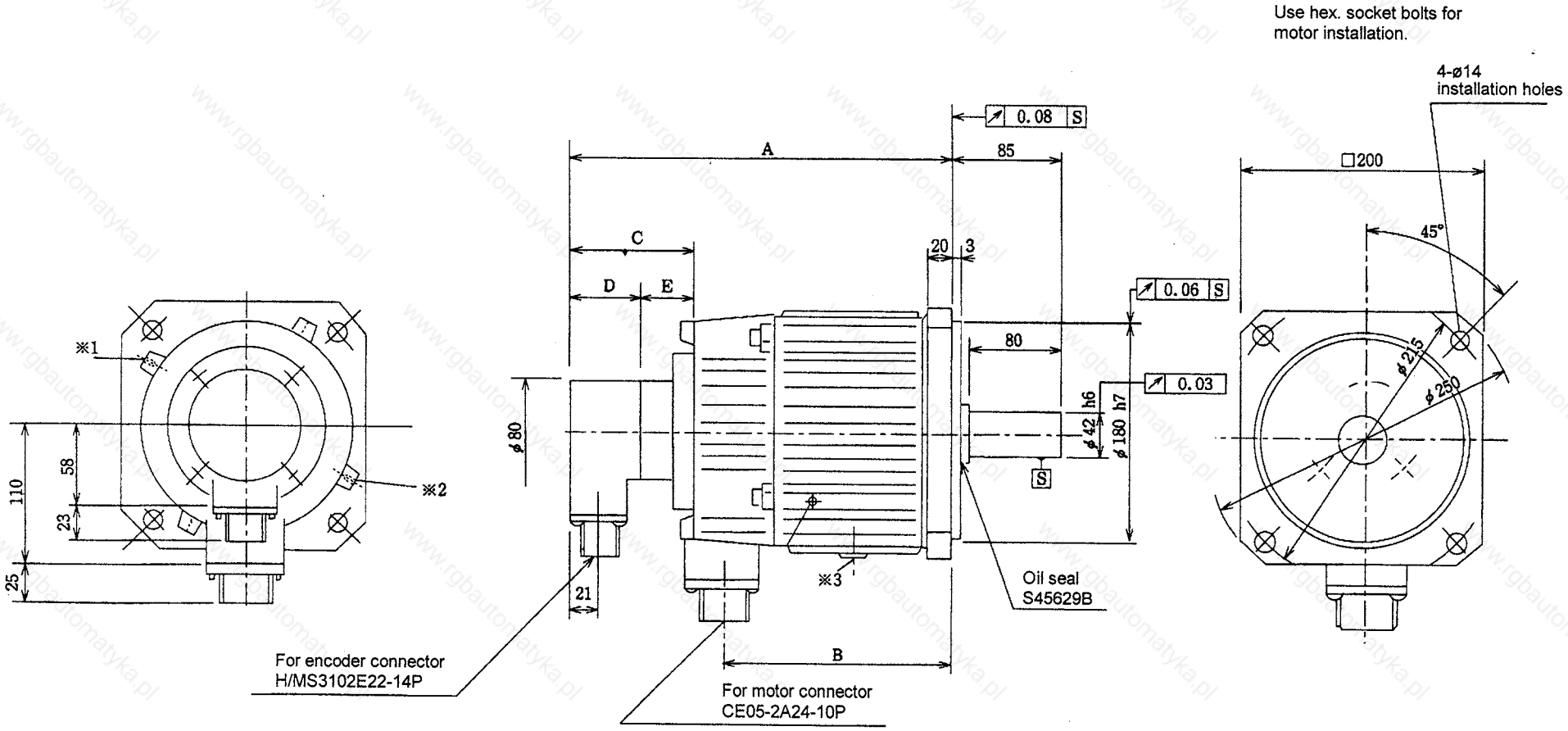

Outline dimension drawing

Motor model	Dimensions A		Dimension B	Weight (kg)	Tolerable shaft end radial load (kg)	Shaft shape
	OHE/OHA type	OSE/OSA type				
HA503L-SR	363	338	245	35	250	Straight shaft
HA503NL-SR	–	338	245	35		Straight shaft

Conventional encoder		
Spec.	Model name	Dim. C
INC	OHE25K-108	98
ABS	OHA25K-108	98

Serial encoder			
Spec.	Model name	Encoder dim. D	Adaptor dim. E
INC	OSE104S/OSE105S	45	28
ABS	OSA104S/OSA105S	45	28

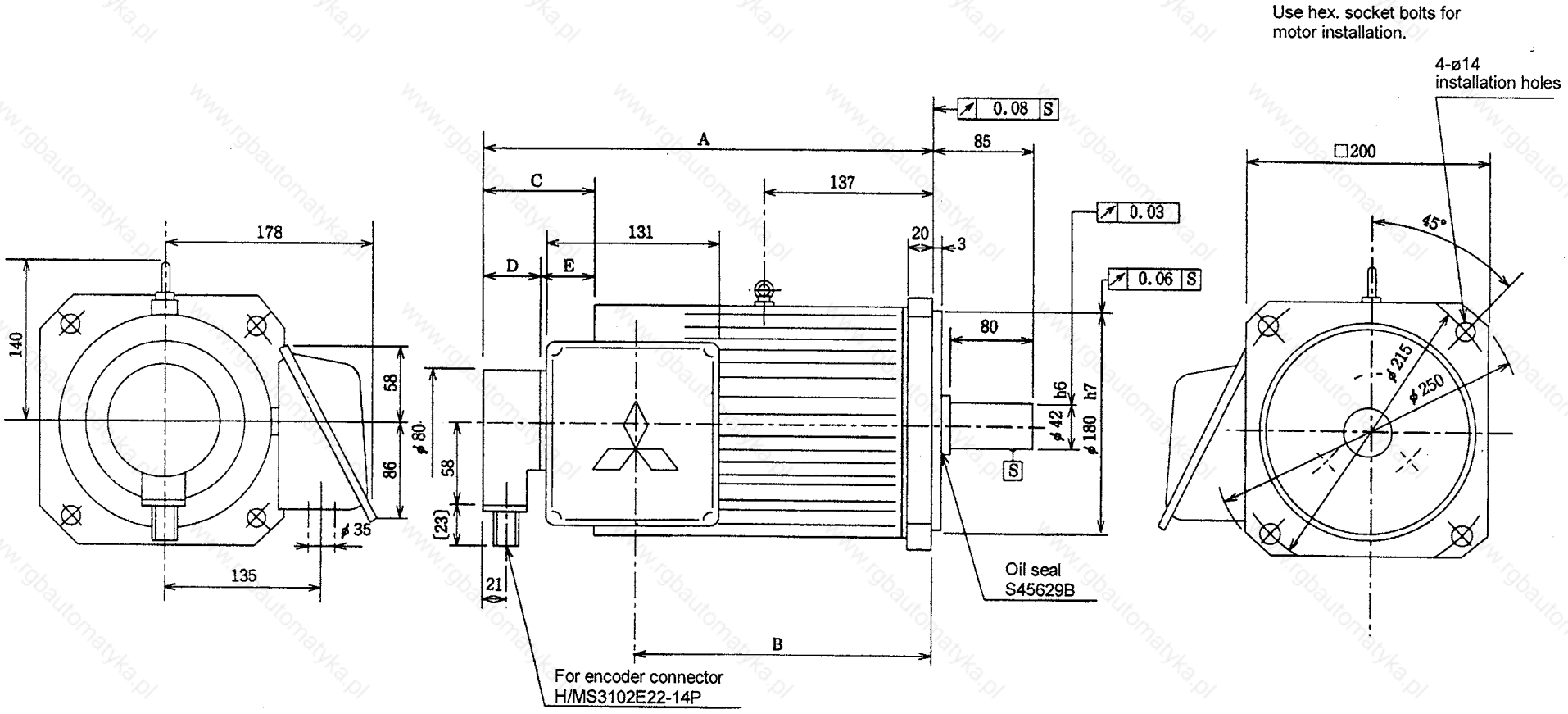

Outline dimension drawing

● Servomotor HA-LH11K2-S1 ~ HA-LH15K2-S1

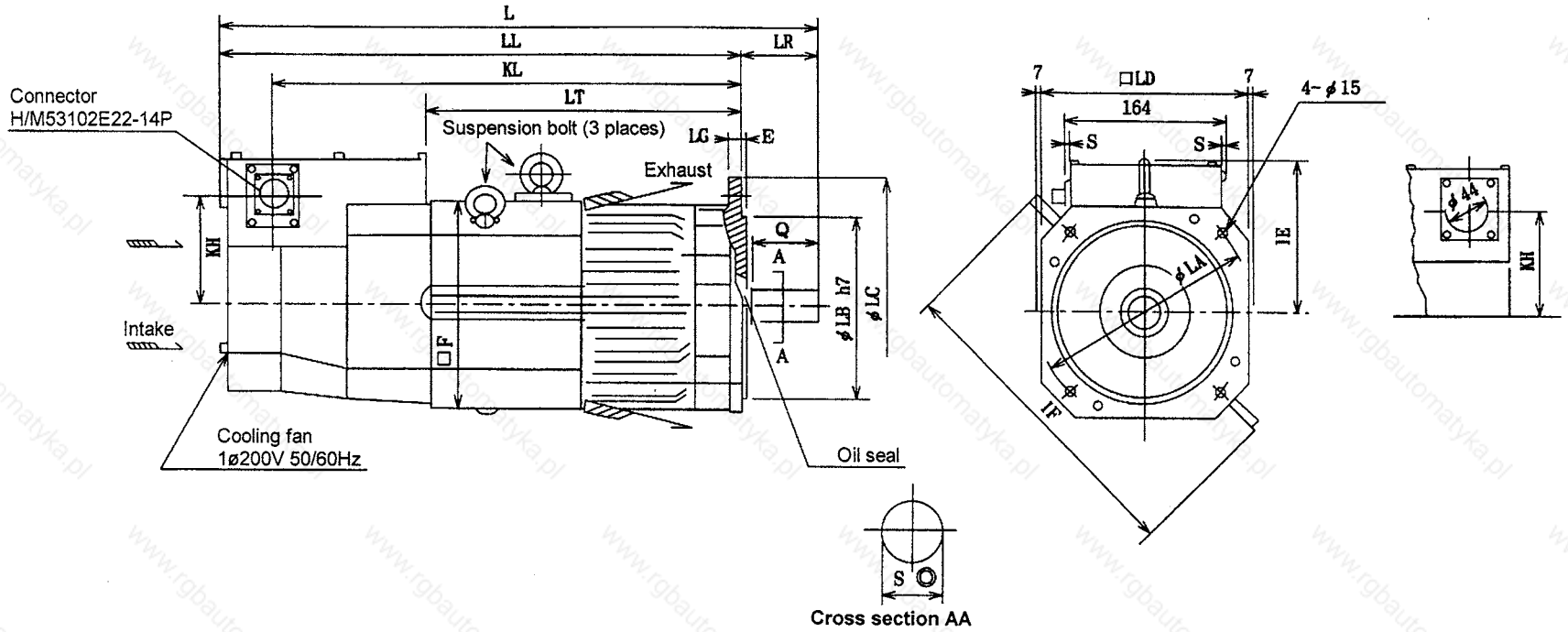

Unit : mm

Model	Motor														Shaft end					Weight (kg)
	F	L	LA	LB	LC	LD	LG	LL	LT	KL	KH	IE	IF	Suspension bolt	E	LR	Q	S	◎	Oil seal	
HA-LH11K2-S1	208	614	215	180	250	204	20	529	316	478	102	152	317	M10	3	85	80	42	h6	S45629B	70
HA-LH15K2-S1	254	688	265	230	300	250	25	578	365	527	117	180	376	M12	3	110	100	55	m6	S60829B	108

(Note) 1. Leave 30mm or more between the cooling fan and wall.
2. Do not use a friction coupling (spun ring, etc.) for the coupling with the load.
3. When removing the suspension bolts and using the motor, plug the screw holes with bolts.
4. This motor is equivalent to IP44, so take care to oil.

Standard motor data sheet

Item			Symbol	Unit	HA40N	HA80N	HA100N	HA200N	HA300N	HA700N	HA900N
Nominal output			P_R	kW	0.5	1.0	2.0	3.5	4.5	7.0	9.0
Continuous characteristics	Rated speed	Output torque	T_R	N·m	2.39	4.78	9.55	16.7	21.5	33.4	43.0
		Input current	I_R	A	3.0	5.5	10	16	22	33.5	42
	Stall state	Output torque	T_S	N·m	2.94	5.88	13.7	22.6	37.3	49.0	58.8
		Input current	L_S	A	3.6	6.6	14	22	37	49	56
Instantaneous characteristics	Maximum characteristics in stall state	Instantaneous torque	T_{PS}	N·m	14.7	29.4	68.6	112.7	186	245	294
		Instantaneous current	I_P	A	18	33	70	110	185	245	280
		Instantaneous power rate	Q_P	kW/sec	220	440	686	967	1805	2364	2713
		Instantaneous angular acceleration	a_P	rad/sec^2	15000	15000	10000	8582	9694	9652	9230
Rated speed			Nmax	r/min	2000						
Rotor GD^2			GD^2_M	$\times10^{-4}$kg·m^2	39.2	78.4	274	525	768	1015	1274
Rotor inertia			J_M	$\times10^{-4}$kg·m^2	9.8	19.6	68.6	131.0	192.0	254.0	319.0
Armature resistance (one phase, 20°C)			R_a	Ω	2.23	0.89	0.31	0.136	0.067	0.058	0.045
Armature inductance (one phase)			L_a	mH	9.6	4.9	3.6	1.8	1.1	0.86	0.8
Induced voltage constant (one phase, 20°C)			K_E	mV/rpm±10%	29.2	32	34.9	36.7	35.8	37	38
Torque constant			K_T	N·m/A±10%	0.83	0.91	1.00	1.05	1.03	1.06	1.09
Electrical time constant			te	msec	4.3	5.5	11.6	13	16	14.8	17.8
Mechanical time constant			tm	msec	9.4	6.2	6.4	4.9	3.7	4.0	3.3
Thermal time constant			tth	min	40	45	60	65	65	65	65
Static frictional torque			T_F	N·m	0.108	0.157	0.137	0.216	0.294	0.373	0.686
Armature winding temperature rise limit			θ max	°C	130	130	130	130	130	130	130
Weight (motor only)			—	kg	7	11	20	31	42	55	79
Armature insulation class					Class F						

Standard motor data sheet

Item			Symbol	Unit	HA053	HA13	HA23N	HA33N	HA43N	HA83N	HA103N	HA203N	HA303N	HA703N
Nominal output			P_R	kW	0.05	0.1	0.3	0.45	0.5	1.0	2.0	3.5	4.5	7.0
Continuous characteristics	Rated speed	Output torque	T_R	N·m	0.16	0.32	0.95	1.43	1.60	3.19	6.37	11.2	14.3	22.3
		Input current	I_R	A	0.95	0.95	2.9	2.2	2.8	4.9	9.2	18	21	31
	Stall state	Output torque	T_S	N·m	0.25	0.49	0.98	1.96	2.94	5.88	13.7	22.6	37.3	49.0
		Input current	L_S	A	1.4	1.4	3.0	3.0	5	8.8	19.6	34.5	55	68
Instantaneous characteristics	Maximum characteristics in stall state	Instantaneous torque	T_{PS}	N·m	1.22	2.45	4.9	9.8	15.7	29.4	68.6	113	186	245
		Instantaneous current	I_P	A	7.0	7.0	15	15	25	44	98	127.5	275	340
		Instantaneous power rate	Q_P	kW/sec	81.4	167.0	24500	490	220	440	686	967	1805	2364
		Instantaneous angular acceleration	a_p	rad/sec^2	66490	68490	50000	50000	15000	15000	10000	8582	9694	9652
Rated speed			Nmax	r/min	3000									
Rotor GD^2			GD^2_M	$\times 10^{-4}$kg·m^2	0.74	1.43	3.92	7.84	39.2	78.4	274	525	768	1015
Rotor inertia			J_M	$\times 10^{-4}$kg·m^2	0.18	0.36	0.98	1.96	9.8	19.6	68.6	131.0	192.0	254.0
Armature resistance (one phase, 20°C)			R_a	Ω	7.2	9.3	2.22	3.0	1.16	0.5	0.18	0.052	0.0316	0.0244
Armature inductance (one phase)			L_a	mH	6.4	10.8	4.4	8.7	5	2.8	2.1	0.72	0.46	0.42
Induced voltage constant (one phase, 20°C)			K_E	mV/rpm±10%	6.2	12.4	12.1	24.2	21	23.9	24.8	23	24.5	25.8
Torque constant			K_T	N·m/A±10%	0.18	0.35	0.34	0.69	0.60	0.69	0.71	0.66	0.71	0.75
Electrical time constant			te	msec	0.89	1.16	2.0	2.9	4.3	5.6	11.7	14	15	17
Mechanical time constant			tm	msec	12.8	8.0	5.5	3.7	9.5	6.3	7.4	4.6	3.7	3.4
Thermal time constant			tth	min	10	10	20	25	40	45	60	65	65	65
Static frictional torque			T_F	N·m	0.005	0.007	0.039	0.059	0.108	0.157	0.137	0.216	0.294	0.373
Armature winding temperature rise limit			θ max	°C	130	130	130	130	130	130	130	130	130	130
Weight (motor only)			—	kg	1.1	1.5	2.0	3.0	7	11	20	31	42	55
Armature insulation class					Class F									

Low inertia AC servomotor data sheet (2000rpm/3000rpm)

Item			Symbol	Unit	HA50LC-S HA50LC-TS	HA100LC-S HA100LC-TS	HA150LC-S HA150LC-TS	HA200LC-S	HA300LC-S	HA500LC-S
Nominal output			P_R	kW	0.5	1.0	1.5	2.0	3.0	5.0
Continuous characteristics	Rated speed	Output torque	T_R	N·m	2.39	4.78	7.16	9.55	14.3	23.8
		Input current	I_R	A	3.4	6.8	9.5	13	16	28
	Stall state	Output torque	T_S	N·m	2.94	5.88	8.83	13.7	22.6	37.3
		Input current	L_S	A	4	8	11.5	18.2	25	44
Instantaneous characteristics	Maximum characteristics in stall state	Instantaneous torque	T_{PS}	N·m	14.7	29.4	44.1	68.6	112.7	186
		Instantaneous current	I_P	A	20	40	57.5	91	125	220
		Instantaneous power rate	Q_P	kW/sec	788	1575	2362	2401	4320	3931
		Instantaneous angular acceleration	a_P	rad/sec^2	53571	53571	53571	35000	38333	21111
Rated speed			Nmax	r/min	2000					
Rotor GD^2			GD^2_M	$\times 10^{-4}$kg·m^2	11	22	33	78.4	117.6	352.8
Rotor inertia			J_M	$\times 10^{-4}$kg·m^2	2.75	5.49	8.24	19.6	29.4	88.3
Armature resistance (one phase, 20°C)			R_a	Ω	1.36	0.484	0.29	0.143	0.112	0.041
Armature inductance (one phase)			L_a	mH	7.3	3.4	3.4	1.43	1.37	0.74
Induced voltage constant (one phase, 20°C)			K_E	mV/rpm±10% (rms)	27	26	27	26.5	32	30
Torque constant			K_T	N·m/A±10%	0.76	0.75	0.77	0.76	0.91	0.85
Electrical time constant			te	msec	5.4	7.0	8.3	10	12.3	18
Mechanical time constant			tm	msec	1.9	1.4	1.2	1.5	1.2	1.5
Thermal time constant			tth	min	40	45	45	60	65	65
Static frictional torque			T_F	N·m	0.108	0.157	0.206	0.294	0.392	0.490
Armature winding temperature rise limit			θ max	°C	130					
Weight			—	kg	6.5	9.5	12.5	16	22	35

The same characteristics apply to the HA□□NLC motor.

Low inertia AC servomotor data sheet (2000rpm/3000rpm)

Item			Symbol	Unit	HA-LH11K2-S1	HA-LH15K2-S1	HA53LC-S HA53LC-TS	HA103LC-S HA103LC-TS	HA153LC-S HA153LC-TS	HA203LC-S	HA303LC-S	HA503LC-S
Nominal output			P_R	kW	11.0	15.0	0.5	1.0	1.5	2.0	3.0	5.0
Continuous characteristics	Rated speed	Output torque	T_R	N·m	52.5	71.6	1.60	3.19	4.77	6.36	9.55	16.0
		Input current	I_R	A	68.0	78.0	3.5	6.5	9.6	11.0	15.2	26.0
	Stall state	Output torque	T_S	N·m	70.6	91.7	2.94	5.88	8.82	13.7	22.5	37.3
		Input current	L_S	A	84.0	100.0	5.8	11.0	16.2	21	32	54
Instantaneous characteristics	Maximum characteristics in stall state	Instantaneous torque	T_{PS}	N·m	353	490	14.7	29.4	44.1	68.6	112.7	186
		Instantaneous current	I_P	A	420	500	29	55	81	105	160	270
		Instantaneous power rate	Q_P	kW/sec	235	177	788	1575	2362	2401	4320	3930
		Instantaneous angular acceleration	a_P	rad/sec^2	30000	16892	53571	53571	53571	35000	38333	21111
Rated speed			Nmax	r/min	2000		3000					
Rotor GD^2			GD^2_M	×10^{-4}kg·m^2	470	1160	11	22	33	78.4	117.6	352.8
Rotor inertia			J_M	×10^{-4}kg·m^2	118.0	290.0	2.7	5.5	8.2	19.6	29.4	88.3
Armature resistance (one phase, 20°C)			R_a	Ω	0.03	0.026	0.6	0.25	0.142	0.11	0.066	0.0289
Armature inductance (one phase)			L_a	mH	0.43	0.40	3.2	1.7	1.14	1.0	0.77	0.49
Induced voltage constant (one phase, 20°C)			K_E	mV/rpm±10% (rms)	29.6	34.3	18.5	19.8	20.0	24.2	25.2	25.5
Torque constant			K_T	N·m/A±10%	0.84	0.98	0.53	0.57	0.57	0.69	0.72	0.73
Electrical time constant			te	msec	14.4	15.6	5.4	6.8	8.1	9.1	11.7	17.0
Mechanical time constant			tm	msec	1.6	2.32	1.8	1.3	1.1	1.4	1.1	1.5
Thermal time constant			tth	min	30	30	40	45	45	60	65	65
Static frictional torque			T_F	N·m	0.412	0.539	0.108	0.157	0.206	0.294	0.392	0.490
Armature winding temperature rise limit			θ max	°C	130							
Weight			—	kg	70	108	6.5	9.5	12.5	16	22	35

The same characteristics apply to the HA□□NLC motor.

(2) Torque–speed characteristic

HA 4 0 N

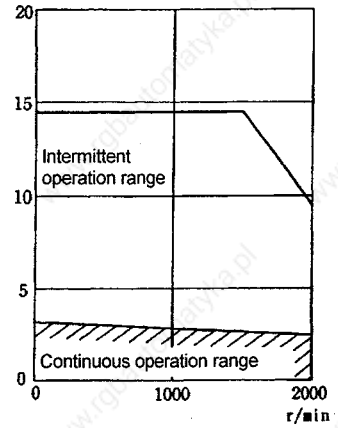

HA 8 0 N

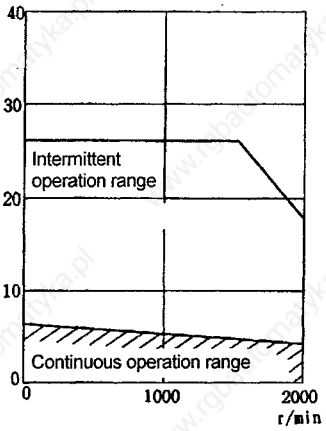

HA 1 0 0 N

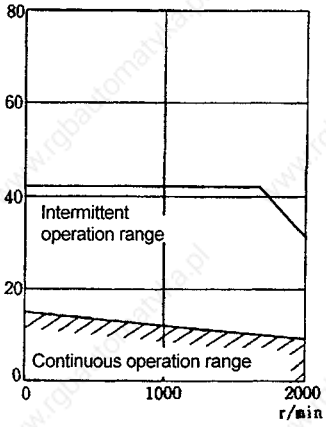

HA 2 0 0 N

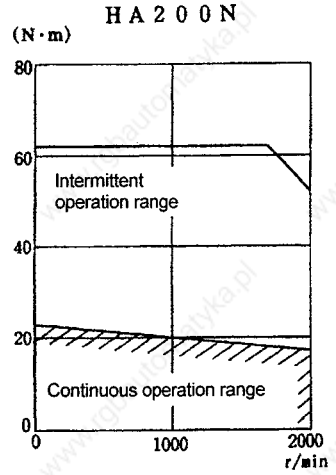

HA 3 0 0 N

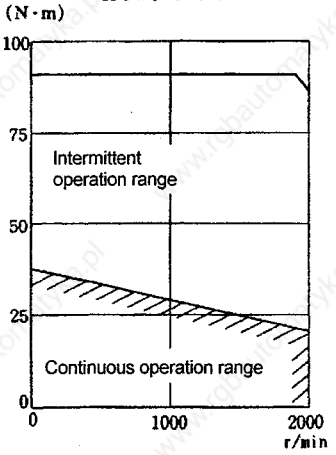

HA 7 0 0 N

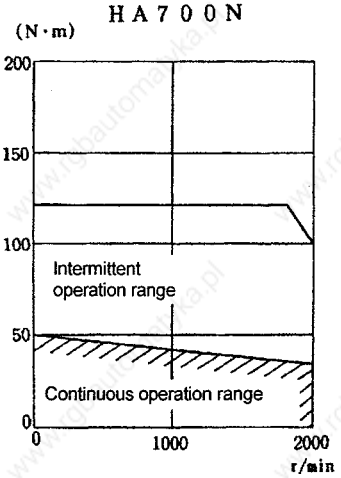

HA 9 0 0 N

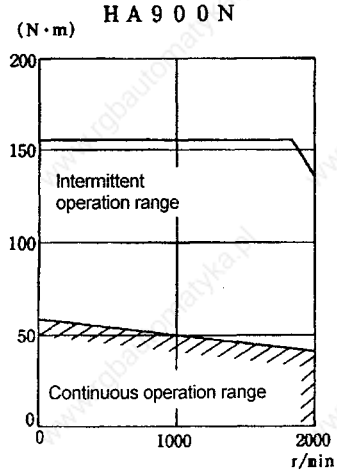

HA 0 5 3

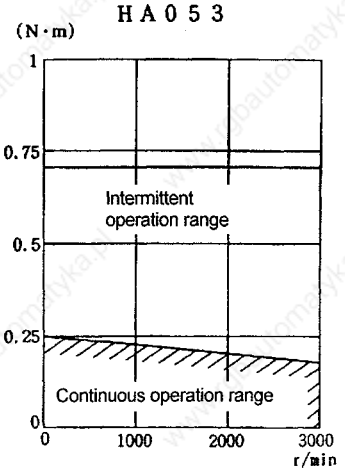

HA 1 3

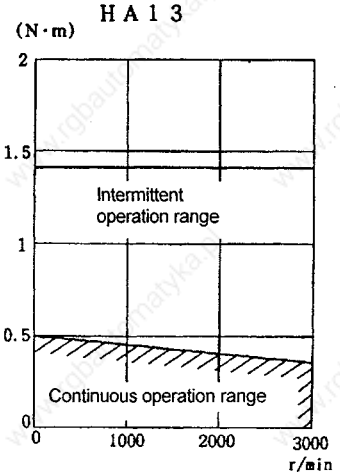

* The upper graphs show the data for the input voltage of 200VAC.

HA23N

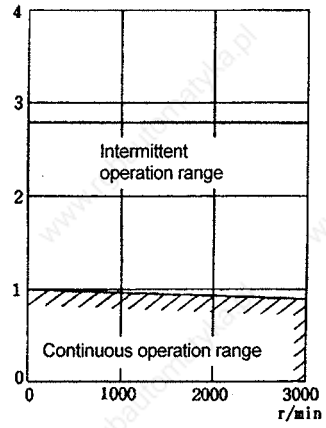

HA33N

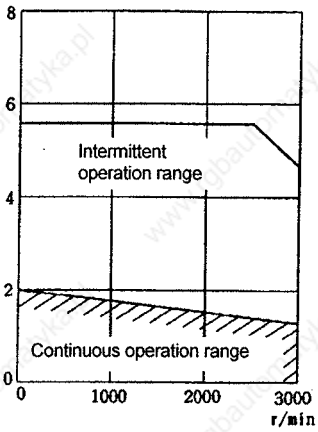

HA43N

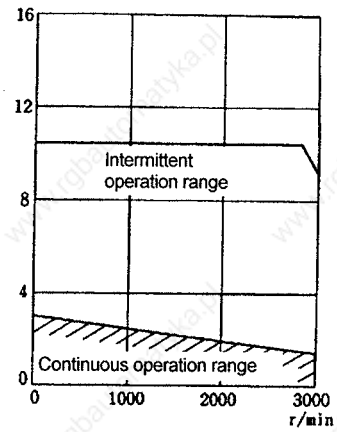

HA83N

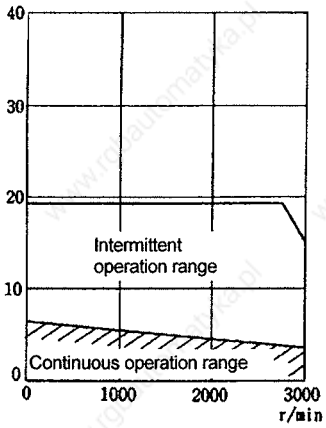

HA103N

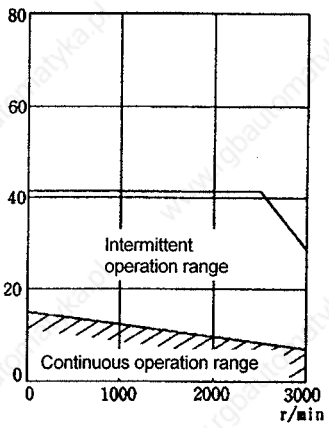

HA203N

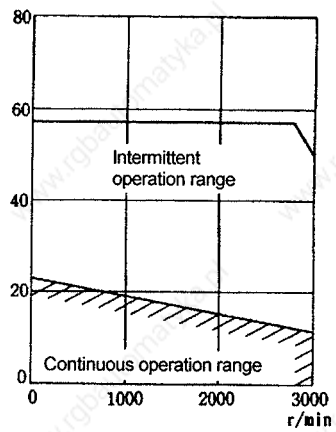

HA303N

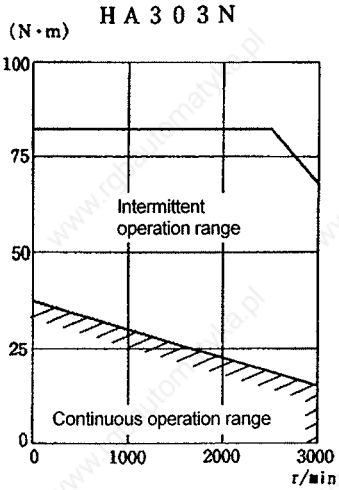

HA703N

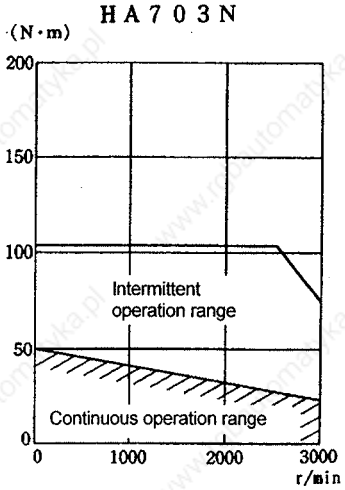

* The upper graphs show the data for the input voltage of 200VAC.

HA50NL

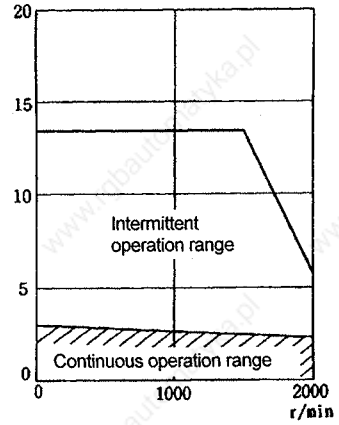

HA100NL

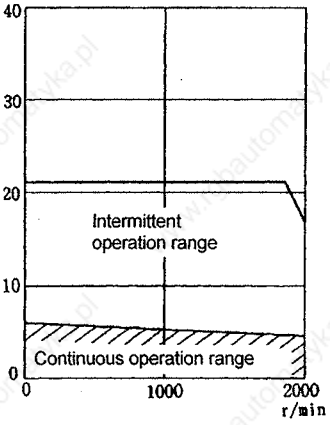

HA150NL

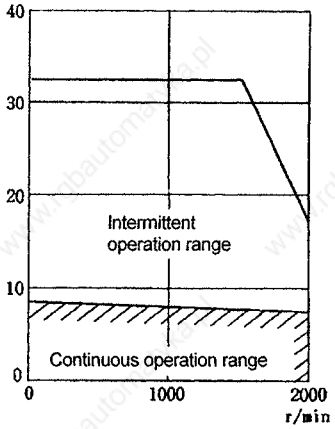

HA200NL

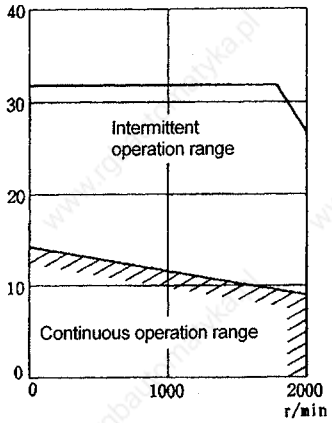

HA300NL

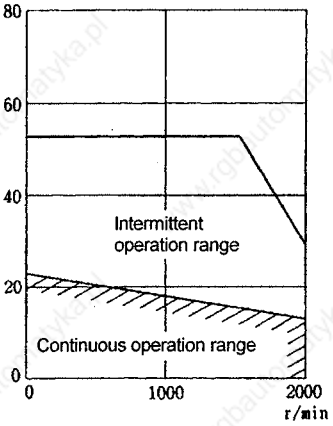

HA500NL

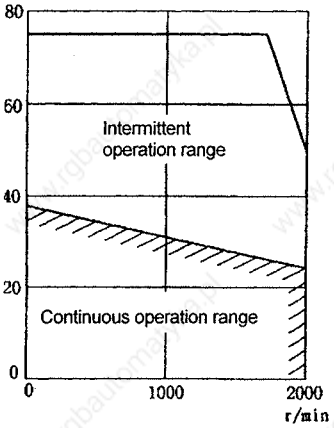

* The upper graphs show the data for the input voltage of 200VAC.

HA53NL

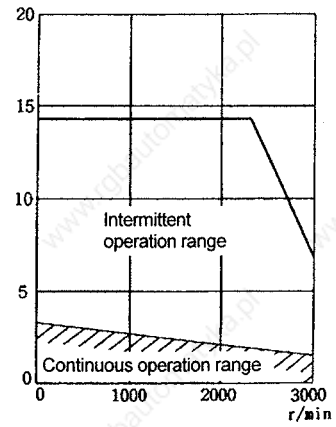

HA103NL

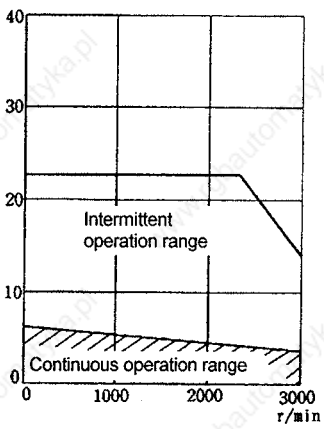

HA153NL

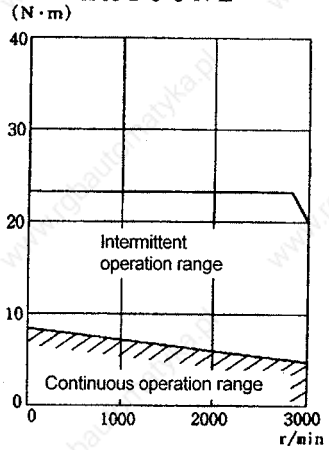

HA203NL

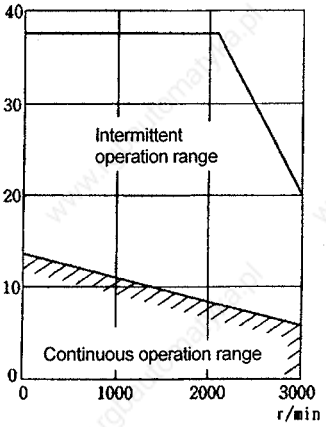

HA303NL

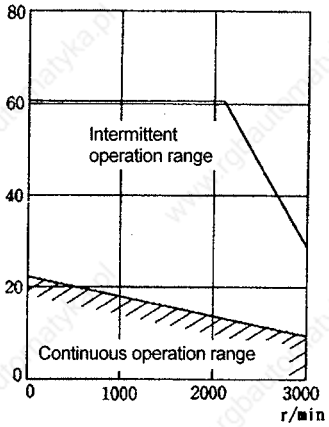

HA503NL

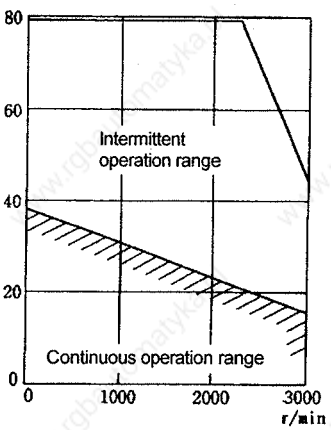

* The upper graphs show the data for the input voltage of 200VAC.

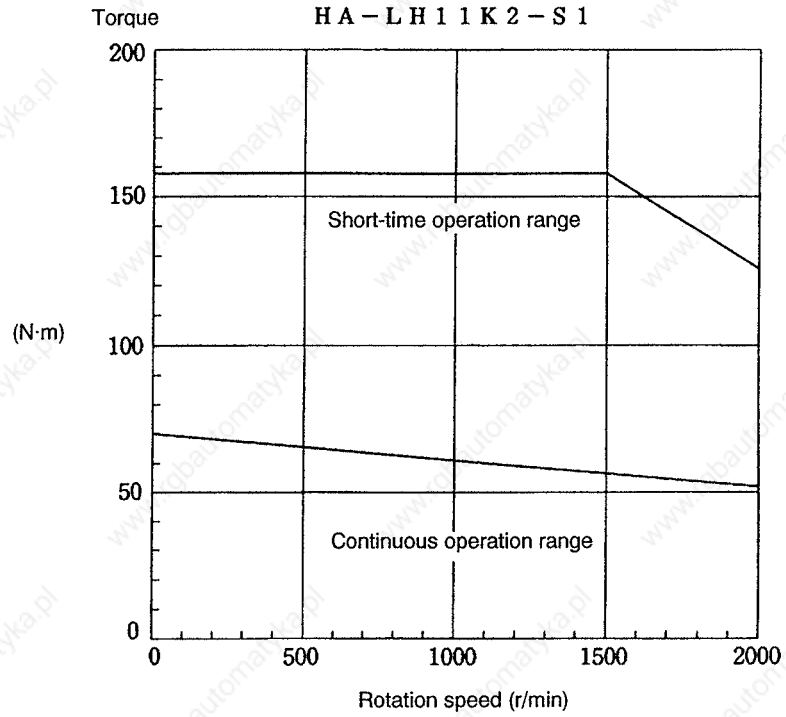

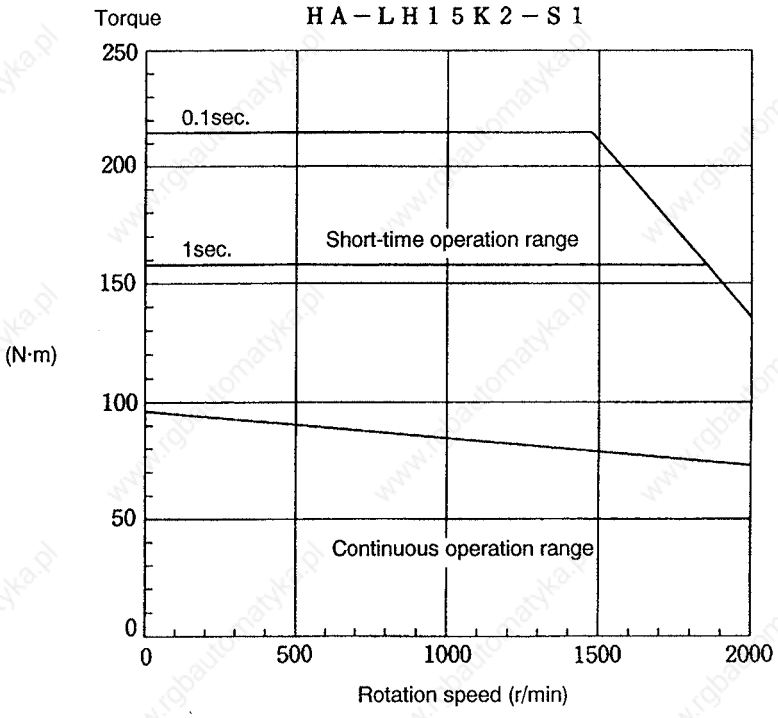

When using a combination of the HA-LH15K2-S1 and V1-150, the short-time operation range is further subdivided by the operation time.

Note) The above torque characteristics are for a 200V power voltage.

These characteristics are not guaranteed when the power voltage drops.

(3) Duty drive characteristic

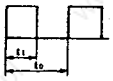

$$\text{Duty percent} = \frac{t_1}{t_0} \times 100\ (\%)$$

t_1 = On time (min.)

These characteristics are limited by the servo amplifier.

HA053, HA13

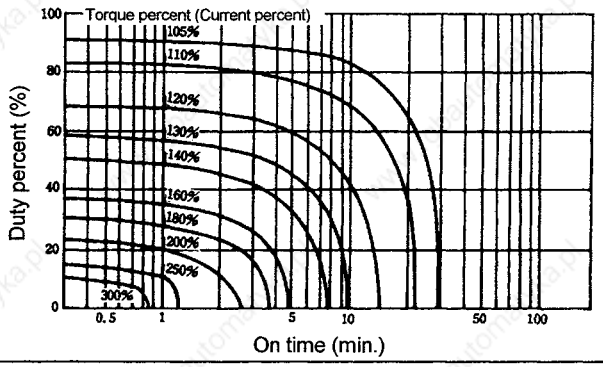

HA23N, HA33N

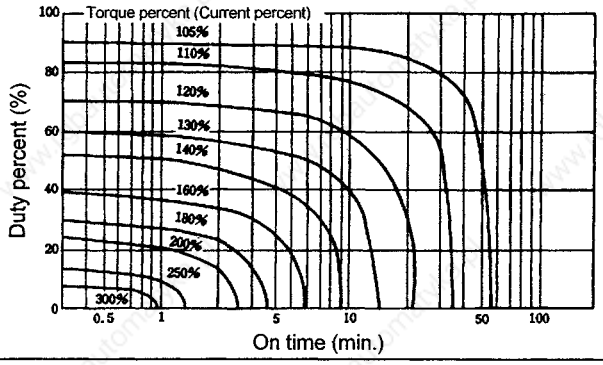

HA40N, HA43N, HA50NL, HA53NL

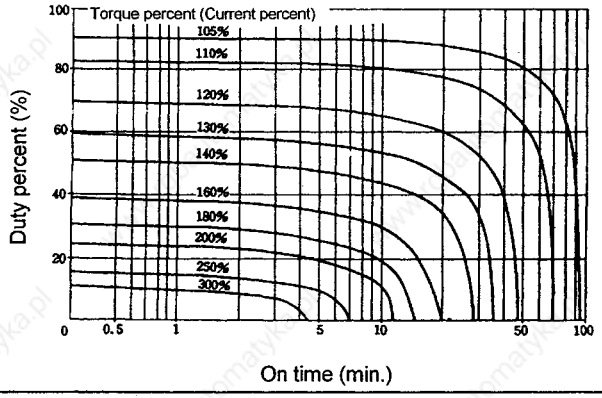

HA80N, HA83N, HA100NL, HA103NL HA150NL, HA153NL

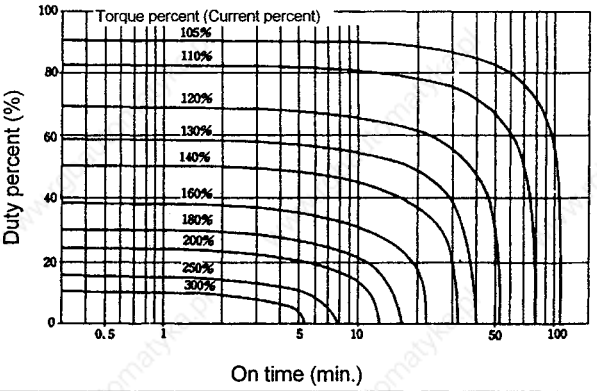

HA100N, HA103N, HA200NL, HA203NL

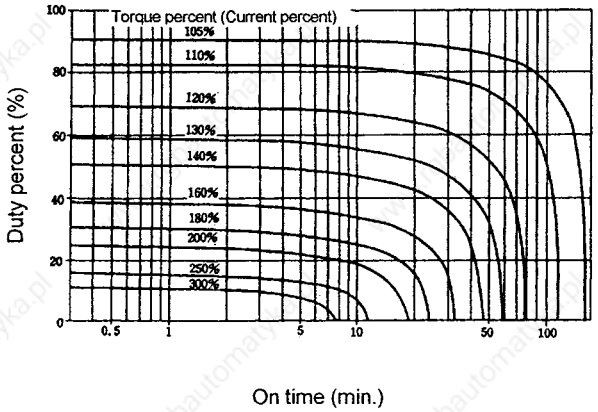

HA200N, HA203N, HA300NL, HA303NL HA300N, HA303N, HA500NL, HA503NL HA700N, HA703N, HA900N

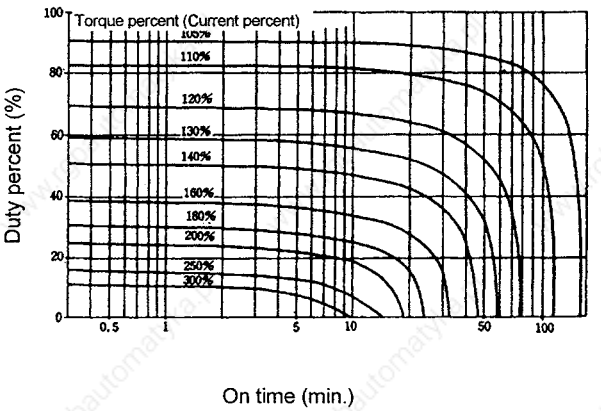

2.7 Motor connection

⚠ WARNING

Always insulate the connection section of the power supply terminal. Failure to do so could lead to electric shocks.

⚠ CAUTION

Do not directly connect commercial power supply to the servomotor. Doing so could lead to faults.

1. Always match the power lead phases (A, B, C) and the amplifier output terminal (U, V, W) phases.
2. Application of commercial power supply to the motor terminals (U, V, W) could cause the motor to demagnetize or burn.
   The commercial power can be connected only to the servo amplifier output terminals (U, V, W).
3. Always ground with the grounding terminal E. Connect to the grounding terminal of the servo amplifier, and ground to the earth with the grounding plate in the control panel. (Refer to the Servo and Spindle System Configuration Section 4.)
4. Supply 24VDC (user-prepared, refer to 2.8 (2) Magnetic brake characteristics for the current capacity) to the brake lead of the motor with magnetic brakes.
   The power supply VDD (24VDC) in the servo amplifier cannot be used.

(1) Cannon plugs to be used

Motor model	Motor side connector	Cannon plug to be used
HA053C HA13C HA23NC HA33NC	 CE05-2A18-12P	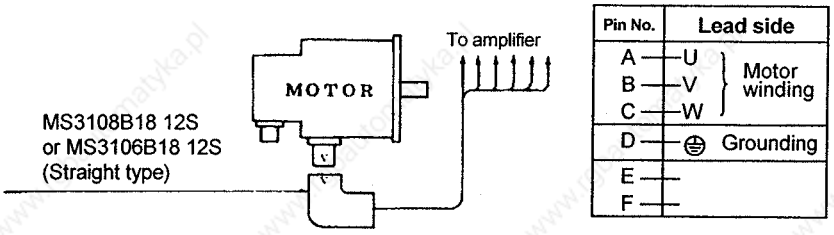
HA40NC HA43NC HA80NC HA83NC HA50NLC HA100NLC HA150NLC HA53NLC HA103NLC HA153NLC	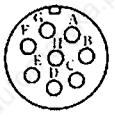 CE05-2A22-23P	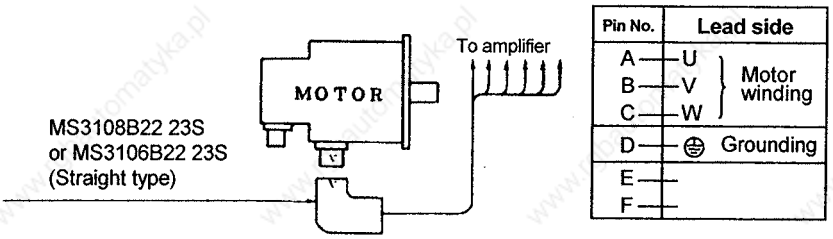
HA100NC HA200NC HA300NC HA103NC HA203NC HA200NLC HA300NLC HA500NLC HA203NLC HA303NLC	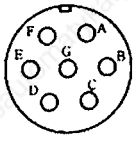 CE05-2A24-10P	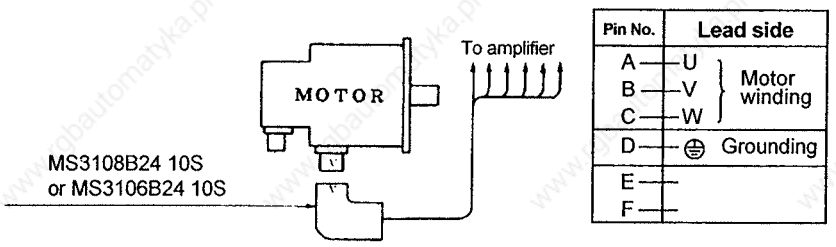

Motor model	Motor side connector	Cannon plug to be used
HA053CB HA13CB HA23NCB HA33NCB	 CE05-2A18-12P H/MS3102A10SL-4P	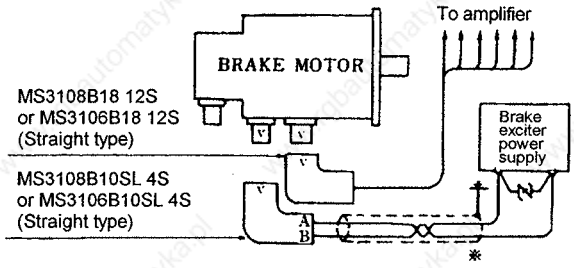 MS3102A18-12P Pin No. / Lead side A — U, B — V, C — W } Motor winding D — ⏚ Grounding E — F — MS3102A10SL-4P Pin No. / Lead side A — B — } Brake
HA40NCB HA43NCB HA80NCB HA83NCB	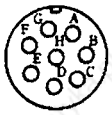 CE05-2A22-23P	* Indicates "CD cut". 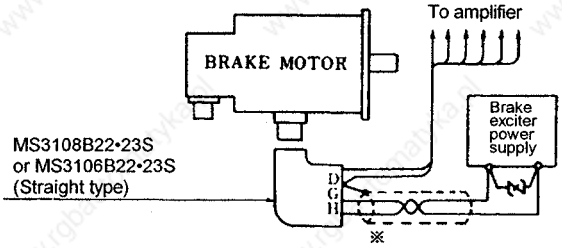 MS3102A18-12P Pin No. / Lead side A — U, B — V, C — W } Motor winding D — ⏚ Grounding E — F — G — H — } Brake
HA100NCB HA200NCB HA300NCB HA103NCB HA203NCB	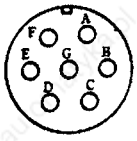 CE05-2A24-10P H/MS3102A10SL-4P	* Indicates "CD cut". 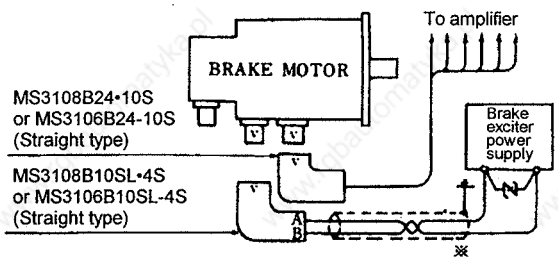 MS3102A24-10P Pin No. / Lead side A — U, B — V, C — W } Motor winding D — ⏚ Grounding E — F — MS3102A10SL-4P Pin No. / Lead side A — B — } Brake

Notes (1) The angle plug (MS3108), straight plug (MS3106), cable clamp (MS3057), and wiring connector should be properly selected.
(2) The key position of the cannon connector should be in the direction of the motor flange.
(3) Refer to the following table for the European Standards compliant parts.

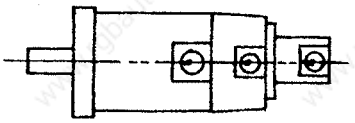

Cannon connector list

Compatible motor	Cannon	Standard connector	European Standards compliant connector		
	Type	Plug (with back shell)	Plug (with back shell)	Cable clamp	Plug (single block)
HA053-33	Straight	MS3106A18-12S	CE05-6A18-12SD-B-BSS	CE3057-10A-□ (D265)	CE05-6A18-12SD-B
	Angle	MS3108B18-12S	CE05-8A18-12SD-B-BAS		–
HA40-80	Straight	MS3106A22-23S	CE05-6A22-23SD-B-BSS	CE3057-12A-□ (D265)	CE05-6A22-23SD-B
	Angle	MS3108B22-23S	CE05-8A22-23SD-B-BAS		–
HA100-300	Straight	MS3106A24-10S	CE05-6A24-10SD-B-BSS	CE3057-16A-□ (D265)	CE05-6A24-10SD-B
	Angle	MS3108B24-10S	CE05-8A24-10SD-B-BAS		–

* Use the cannon plug single block together with a conduit, etc.

(2) Terminal box type motors

Model applicable : HA700N-SR, HA900N-SR, HA303N-SR, HA703N-SR, HA700NB-SR, HA900NB-SR, HA303NB-SR, HA703NB-SR, HA503NL-SR

Motor terminal box detailed drawing

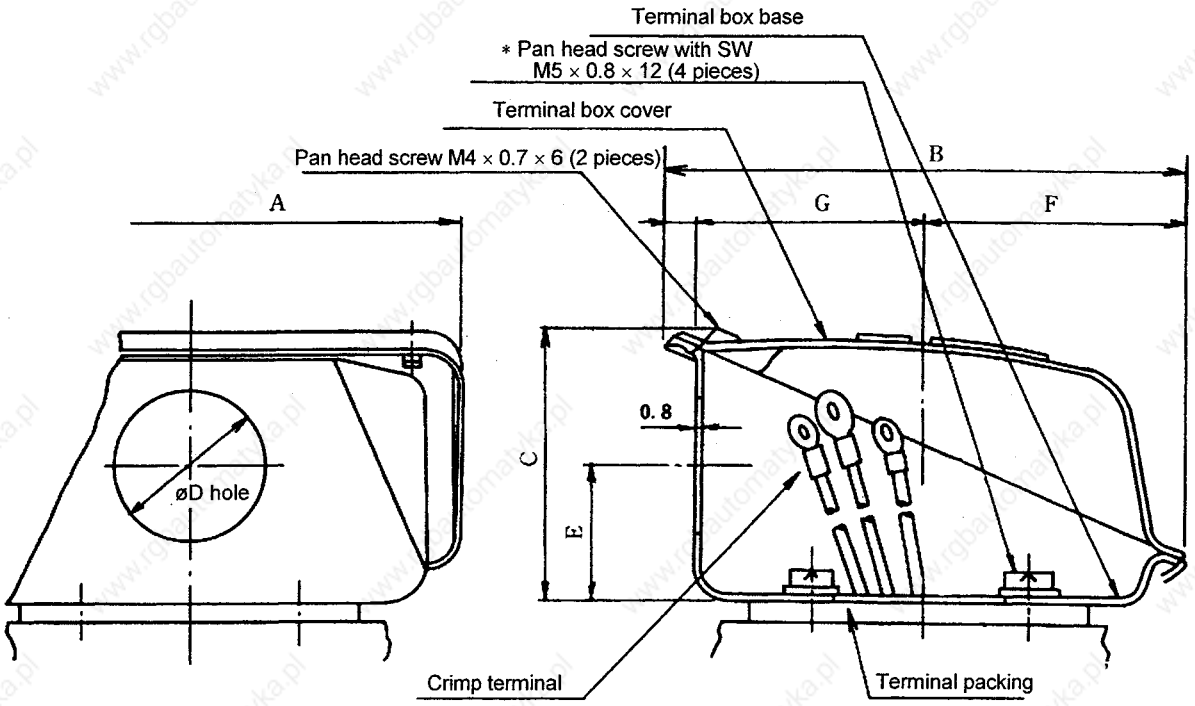

- The direction of the øD hole of the terminal box can be changed every 90°.
  However, since the øD hole is positioned as shown in the outline dimension drawing, remove the screw marked with * when the direction should be changed.
- When a spare part is required due to damage, the part should be ordered from Mitsubishi Electric along with the parts number listed in the drawing.

	Changed dimensions							Model	
Model	A	B	C	D	E	F	G	Terminal box cover	Terminal box base
HA700N,HA700NB HA900N,HA900NB HA303N,HA303NB HA703N,HA703NB HA503NL	131	144	78	35	37	60	76	M953C771H01	M952B407H20

Types of terminal box lead wires

Servomotor			
Lead wire type		Lead wire crimp terminal	
Type	Indication	HA700/900 HA503NL HA303/703	HALH11K HALH15K
Electromagnetic brake (when specified)	Blue Blue	M4	–
Motor windig	U	M6	M6
	V		
	W		
Motor ground	Note (2)	M5	M5
Motor fan	BU	–	M4
	BU		

Servo amplifier					
Terminal	A/B-V1-01 03 05	A/B-V1-10 20 30	A/B-V1-45	A/B-V1-70 90	B-V1-110 150
L+	M6	M6	M6	M6	M6
L–					
L11	M4	M4	M4	M4	M4
L21					
U	M4	M4	M5	M5	M8
V					
W					
⏚					

Notes (1) For the terminal box type servomotors of special models, pay special attention to the model names.

(2) Use one of the screws marked with * in the terminal box detailed drawings as the motor ground.

(3) When an electromagnetic brake is provided, a surge absorber can be housed in the motor terminal box. See the installation procedure drawing N109D132.

(4) The terminals should be connected as shown in the following figure using the screws listed in the above table.
Each connection section should be insulated by winding several turns of insulation tape around it so that it is securely insulated. When housing the connection sections in the terminal box, take care not to damage the insulation section.

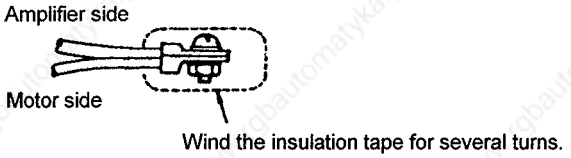

(5) For the cables to be used, see the following section.

(3) Cables to be used

Model	U, V, W (Motor main circuit)	Note (2) Grounding wire (Motor ground)	Note (3) Electromagnetic brake for excitation
HA053 HA13 HA23N HA33N	1.25mm^2 (1.25mm^2 or less)	1.25mm^2 (1.25mm^2 or less)	0.5mm^2 (1.25mm^2 or less)
HA40N HA43N	2mm^2 or more (3.5mm^2 or less)	2mm^2 or more (3.5mm^2 or less)	0.5mm^2 or more (3.5mm^2 or less)
HA80N HA83N	2mm^2 or more (3.5mm^2 or less)	2mm^2 or more (3.5mm^2 or less)	0.5mm^2 or more (3.5mm^2 or less)
HA100N	3.5mm^2 or more (8mm^2 or less)	3.5mm^2 or more (8mm^2 or less)	0.5mm^2 or more (8mm^2 or less)
HA103N HA200N	5.5mm^2 or more (8mm^2 or less)	5.5mm^2 or more (8mm^2 or less)	0.5mm^2 or more (8mm^2 or less)
HA203N HA300N	5.5mm^2 or more (8mm^2 or less)	5.5mm^2 or more (8mm^2 or less)	0.5mm^2 or more (3.5mm^2 or less)
HA700N HA900N HA303N HA703N	8mm^2 or more	8mm^2 or more	0.5mm^2 or more (3.5mm^2 or less)
HA50NLC HA100NLC HA53NLC HA103NLC	2mm^2 or more (3.5mm^2 or less)	2mm^2 or more (3.5mm^2 or less)	
HA150NLC HA153NLC	2mm^2 or more (3.5mm^2 or less)	2mm^2 or more (3.5mm^2 or less)	
HA200NLC HA300NLC HA203NLC HA303NLC	5.5mm^2 or more (8mm^2 or less)	5.5mm^2 or more (8mm^2 or less)	
HA500NLC	5.5mm^2 or more (8mm^2 or less)	5.5mm^2 or more (8mm^2 or less)	
HA503NL	8mm^2 or more	8mm^2 or more	
HA-LH11K2	14mm^2 or more	14mm^2 or more	
HA-LH15K2	22mm^2 or more	22mm^2 or more	

Notes (1) For reference, the cable size in parentheses above represents a restricted value from the soldered cup dimensions of the cannon plug.

(2) "Internal regulation" for identifying the grounding wire is described as follows:

> **140-14 Green color identification of grounding wire**
>
> 1. A green identification sign shall be placed on any grounding wire for any grounding work except:
>
> ① when only the grounding wire is connected and it can be easily identified.
>
> ② when one conductor in a cable, tough rubber sheathed cable or cord with a multiple number of conductors is used as a grounding wire and when the conductor is a bare wire or has a green and yellow stripe pattern.
>
> **[Note]** When one conductor in a cable, tough rubber sheathed cable or cord with a multiple number of conductors is used as a grounding wire, any other conductor except for one which has a green or greenish yellow stripe pattern cannot be used as a grounding wire.
>
> 2. If any other conductor except for one with a green or greenish yellow stripe pattern is used as a grounding wire, it is necessary to indicate that the conductor is a ground wire using green tape and the like at the terminal and proper positions.

(3) When the electromagnetic brake works in "DC OFF", use a shielded cable.

(4) When the motor is used in an application where it travels, select a cable type with high flexibility.

(5) For crimp terminals connected to the servo amplifiers, see (2).

2.8 Motors with electromagnetic brake

⚠ CAUTION

1. The axis will not be mechanically held even when the dynamic brakes are used. If the machine could drop when the power fails, use a servomotor with magnetic brakes or provide an external brake mechanism as holding means to prevent dropping.
2. The magnetic brakes are used for holding, and must not be used for normal braking. There may be cases when holding is not possible due to the life or machine structure (when ball screw and servomotor shaft are coupled with a timing belt, etc.). Provide a stop device on the machine side to ensure safety.
3. Use a double circuit configuration so that the magnetic brake operation circuit will activate even with the external emergency stop signal.

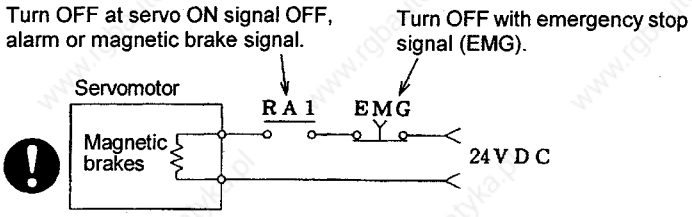

When using the motor with magnetic brakes for double dynamic safety to prevent dropping of the vertical axis or during an emergency stop, note the following cautions.

① The brake is a safety brake. The brakes are applied when the power (24VDC) is OFF.
② Always turn the servo OFF (SON signal) when applying the brakes.
③ When using to prevent dropping of the vertical axis, create a sequence that considers the braking delay time.

(1) Outline of motors with electromagnetic brake

(a) Types
Motors with electromagnetic brakes are a lineup of the HA series. Their specifications are described in the following paragraph.

(b) Applications
When a motor with an electromagnetic brake is used for a vertical feed axis in a machining center, and even if the hydraulic pressure of a hydraulic balancer becomes 0 due to power OFF, the brake prevents the spindle head from dropping. In robots, even if the power is abruptly turned off, this type of motor can prevent the robot body from falling down.
When this type of motor is used for the feed axis of a grinding machine, a dual interlock can be structured along with an emergency stop dynamic brake, thereby preventing collisions and spraying of ground materials.
This motor cannot be used for any other purposes than holding and braking at the time of power failure (in emergency).

(c) Features
① Since the electromagnetic brake is a DC excitation type,
- The brake has a simple mechanism and high reliability.
- The brake tap selection is not necessary for frequencies of 50Hz and 60Hz.
- With excitation ON, no rush current and no shock occur.
- The brake portion is smaller than the motor section.

② Since the electromagnetic brake is housed in the motor non-load side, the installation dimensions of this motor type are the same as those of non-brake type motors.
③ For electromagnetic brakes, no maintenance inspections are required.
④ This motor type can be safely and securely mounted in elevated locations (with eyebolt taps for the HA100NB or larger models).

(2) Characteristics of electromagnetic brakes

The following table lists the characteristics of the hold brakes used in the servomotors with brake.

Item \ Model		HA053B HA13B	HA23NB HA33NB	HA40NB HA43NB HA80NB HA83NB	HA100NB HA103NB HA200NB HA203NB HA300NB HA303NB HA700NB HA703NB HA900NB
(1) Type		Spring type safety brake			
(2) Excitation coil rating (long-term continuous energization is available.)		24VDC			
(3) Excitation coil resistance	Cold state (20°C)	111Ω	49Ω	38Ω	23Ω
	Hot state	144Ω	64Ω	49Ω	30Ω
(4) Attraction current (when the motor is new, approx.)		0.15A	0.2A	0.25A	0.5A
(5) Drop current		0.06A	0.06A	0.12A	0.18A
(6) Static frictional torque T_B		0.39N·m	1.96N·m	5.88N·m	29.42N·m
(7) Inertia moment	GD^2b ($\times10^{-4}$kg·m^2) Note 1	0.06×10^{-4}kg·m^2	0.8×10^{-4}kg·m^2	2.7×10^{-4}kg·m^2	17×10^{-4}kg·m^2
(8) Release delay time		0.03sec	0.05sec	0.07sec	0.10sec
(9) Braking delay time t_2	AC OFF	0.1sec	0.20sec	0.24sec	0.27sec
	DC OFF	0.02sec	0.03sec	0.04sec	0.04sec
(10) Tolerable braking work amount (Note 2)	E_1One braking operation	5.6J	49.0J	294.2J	980.7J
	E_2One hour	55.9J	490.3J	2942.0J	9806.7J
(11) Brake life (Note 3)		With load of 5.6J per braking: 30000 times	With load of 49.0J per braking: 30000 times	With load of 294.2J per braking: 30000 times	With load of 980.7J per braking: 30000 times
(12) Tolerable speed		3000r/min			
(13) Spline looseness (calculated value)		0.25 ~ 2.5°	0.2 ~ 1.5°	0.16 ~ 0.57°	0.10 ~ 0.36°

Note 1. GD^2b in the above table(7) is a value to be added to a motor without brake.

Note 2. The braking work amount of the brake is expressed by the following equations. The braking work amount should be less than the tolerable braking work amount in (10) of the above table.

$$E_1 = \frac{1}{2}\cdot\frac{GD_M^2 + GD_L^2}{4}\cdot\left[\frac{2\pi}{60}N_{G0}\right]^2\times10^{-4}$$

$$E_2 = \frac{1}{2}\cdot\frac{GD_M^2 + GD_L^2}{4}\cdot\left[\frac{2\pi}{60}N_{G0}\right]\times10^{-4}\times n = E_1\cdot n$$

Where

E_1 : Braking work amount in one braking operation (J)
GD_M^2 : Motor with brake GD^2 ($\times10^{-4}$kg·m^2) Note 4
GD_L^2 : Motor shaft conversion load GD^2 ($\times10^{-4}$kg·m^2)
N_{GO} : Rapid traverse motor speed (r/min)
E_2 : Braking work amount per hour (J)
n : Braking times per hour (times)

Note 3. The brake life is the time from when the brake gap increases due the wear of the brake lining, and the attraction is inhibited (brake opening is not possible).
A life of 30,000 times is equivalent to 5 times/day for 15 years. Thus, when using the brakes exclusively for holding, there is no need to worry about the life.

Note 4. For the value of GD_M^2, refer to 2.6, "Data sheet."

(3) Using electromagnetic brake

(a) Brake excitation power

1) The brake terminals are connected to a cannon connector in any polarity.
The brake terminals are clearly shown on the motor's outline drawing. Do not mistake the brake terminals for another circuit.
2) When handling is required for aligning the machine, etc., prepare another 24VDC power and perform the operation while the brake is electrically released.
The reason why a manual release unit is not provided is to prevent workers from forgetting to restore the unit after use.
3) Since the system is not provided with a brake excitation power, it should be prepared on the machine side. The brake excitation power should be determined by considering both the voltage fluctuation and the excitation coil temperature so as to securely feed the flowing current. The external output for the break is mounted on the servo amplifier. For using it, see the following (c).
4) The brake excitation power can be turned OFF (brakes applied) with AC OFF or DC OFF.
The "DC OFF" is effective when the braking follow-up time is important.
However, it is necessary to check the contact DC shut-off capacity and occurrence of error signal to NC. Follow these precautions.

Precautions in "DC OFF"
• The contact DC shut-off capacity should be properly provided. • Use a surge absorber. • In the cannon connector type, the surge absorber is located far from the switch, therefore shield the cable between the switch and the surge absorber.

5) When the cannon plug is connected or disconnected while the brake power is energized, the motor is damaged (the pins of the cannon plug are damaged due to sparks).
6) When the brake excitation current does not flow (due to a fuse blowing, contact damage, cable breakage, etc.), turn off the motor's main circuit to prevent the motor from rotating while the brake is activated.

Example of DC OFF using stabilized power

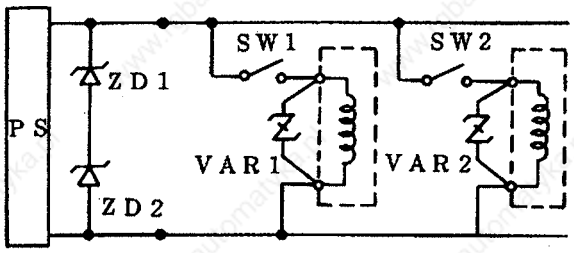

PS : 24VDC stabilized power
ZD1, ZD2 : Zener diode (1W, 24V; Mitsubishi: MZ424-A)
VAR1, VAR2 : Surge absorber (220V; Matsushita Electric Works ERZ-C10DK221)

Example of AC OFF using stabilized power

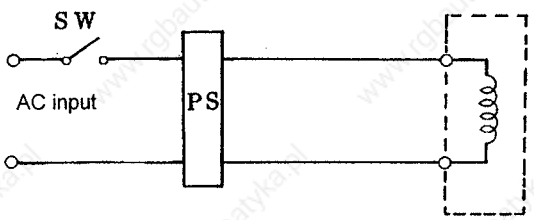

PS : 24VDC stablilized power

Refer to the following table for selecting the wires.

Motor	Power supply		
	Input voltage AC (V)	Output voltage DC (V)	Output current DC (A)
HA053B HA13B	100 or 200	24	0.5A or more
HA23NB HA33NB	100 or 200	24	0.7A or more
HA40NB HA43NB HA80NB HA83NB	100 or 200	24	0.9A or more
HA100NB HA103NB HA200NB HA203NB HA300NB HA303NB HA700NB HA703NB HA900NB	100 or 200	24	1.5A or more

(b) Safety considerations

1) Using timing belt
As shown below on the left, when the HA motor with electromagnetic brake is connected to a load (such as a ball screw) with a timing belt, if the belt is broken, a dangerous situation occurs. Even if the safety coefficient of the belt is increased, the belt may break due to over-tension or cutting chips. In this case, use the method as shown below on the right to improve the safety.

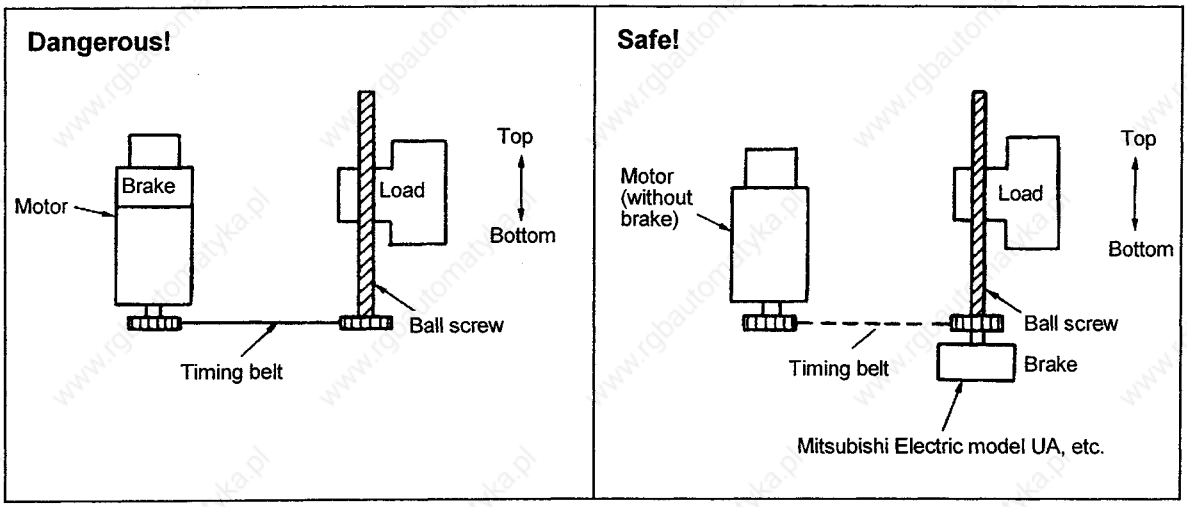

2) Application for grinding machine feed axis
When NC is emergency-stopped, the dynamic brake is activated and the motor stops suddenly, but even if the electromagnetic brake is used along with the dynamic brake, the coasting distance cannot be remarkably shortened.
When considering a failsafe system for the grinding machine, test the coasting distance to determine the limit of the dynamic brake, and then evaluate whether the system is safe or not. In this case, the machine decelerates and stops in the pattern shown in the drawing. The coasting distance in the rapid traverse state, L_{MAX}, is the hatched area in the following drawing, and is calculated by the following equation:

$$L_{MAX} = \frac{F_{GO} \times 10^3}{60} \left(t_1 + t_2 + \frac{t_3}{2}\right) (mm)$$

Braking using electromagnetic brake

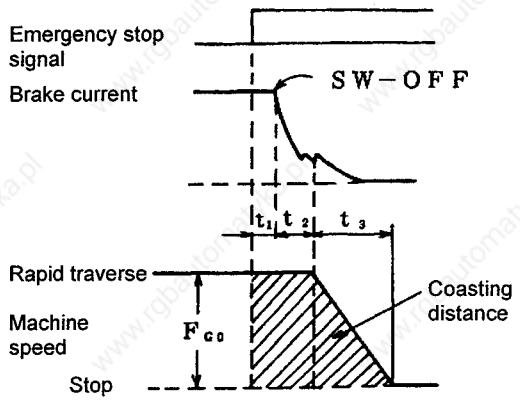

Where
F_{GO} : Machine speed in rapid traverse state (m/min)
t_1 : Delay time in NC (0.05sec)
$*t_2$: Electromagnetic braking delay time (sec)
t_3 : $\frac{(GD_M^2 + GD_L^2)\, N_{GO}}{9.55 \times 10^4 (T_L + 0.8T_B)}$ (sec)
$*GD_M^2$: GD^2 of motor with brake ($\times 10^{-4}$kg·m^2)
GD_L^2 : GD^2 on load side converted into motor shaft ($\times 10^{-4}$kg·m^2)
N_{GO} : Rapid traverse motor shaft (r/min)
T_L : Dynamic friction torque on motor shaft conversion load side (N·m)
$*T_B$: Static friction torque of electromagnetic brake (N·m)

For the asterisk mark (*), see the data in paragraph 2.8(2).

(c) Precautions for sequence
Although the brake excitation power supply should be prepared by the user, exercise the following precautions:

1) When the brake is released (excitation power is ON), make sure that the servo ON state takes place. The following sequence prevents the vertical axis from dropping.

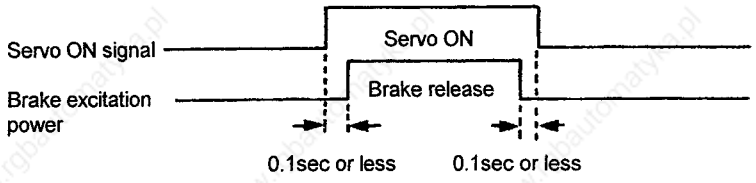

2) When the above sequence cannot be formed, use the "DC OFF" of the excitation power to decrease the drop distance of the vertical axis.

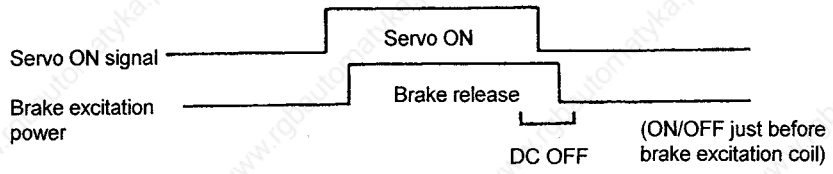

3) In the MDS series, the external output contacts on the servo amplifier can be used.

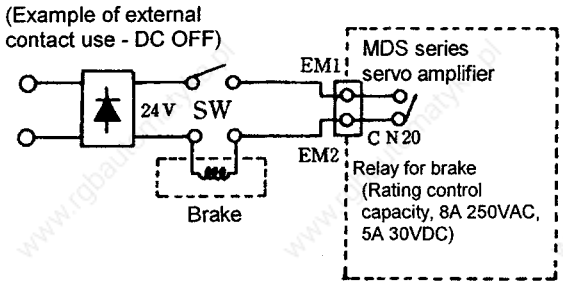

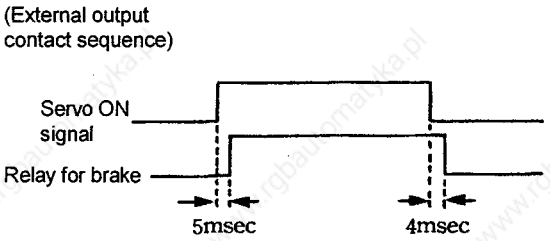

2.9 Motor vibration resistance

Motor	Direction of vibration	
	Axial (X)	Perpendicular to axis (Y)
HA053, HA13, HA50L HA23N, HA33N, HA100L HA40N, HA43N, HA150L HA80N, HA83N	9.8m/s^2 (1.0G)	24.5m/s^2 (2.5G)
HA100N, HA103N, HA200L HA200N, HA203N, HA300L	19.6m/s^2 (2.0G)	49.0m/s^2 (5.0G)
HA300N, HA303N HA700N, HA703N HA500L	11.8m/s^2 (1.2G)	29.4m/s^2 (3.0G)
HA900N	9.8m/s^2 (1.0G)	24.5m/s^2 (2.5G)
HA-LH11K2, HA-LH15K2	9.8m/s^2 (1.0G)	24.5m/s^2 (2.5G)

Conditions

1. In the motor stop state
2. In the installed state
3. No abnormalities occur when the above vibrations are applied for 6 hours at 250Hz (check that there is no resonance point at 250Hz or less).

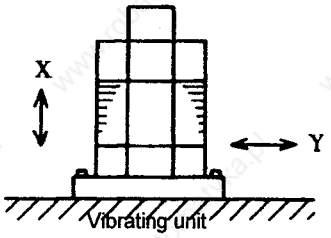

Note (1) Even if the above values are satisfied, for machines with excess vibrations, (turret punch press, press, shearer, etc.), carefully check the looseness of the cannon plug, cable condition, and cable clamps, etc. on the machine side.

2.10 Motor shaft strength

When the AC servomotor is connected to a load, check that the load being applied to the motor shaft does not exceed the values shown in the following table.

Motor shaft end tolerable load

Model	Tolerable radial weight	Tolerable thrust weight
HA053/13	L = 26 8kg	5kg
HA23N/33N	L = 30 25kg	15kg
HA50L HA40N/43N HA100L HA80N/83N HA150L HA53L HA103L HA153L	Tapered shaft L = 58 40kg Straight shaft L = 55 100kg	50kg
HA200L HA100N HA300L HA103N HA203L HA200N HA303L HA203N HA300N HA303N HA700N HA703N	L = 79 210kg	100kg
HA500L HA900N HA503L, HALH-LH11K2	L = 85 250kg	100kg
HA-LH15K2	L = 100 300kg	100kg

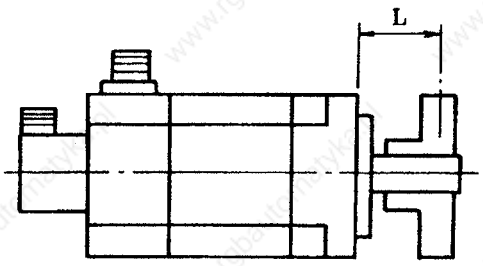

L : Distance between flange installation surface and center of load weight (mm)

(Note) 1. The tolerable thrust load indicates that no radial weight of the load is applied.
The above tolerable values are the maximum values and are not the continuous tolerable loads.
When the motor is connected to the load, the radial weight applied to the motor shaft is calculated as follows.

Direct connection:

Use flexible coupling, and align the core as much as possible. When using highly rigid coupling, further precise core alignment will be required.
The radial weight applied to the shaft on which the coupling is used in obtained by the following equation.

$$P = K_R \times \delta$$

Where P : Radial weight (kg)
K_R : Spring constant in radial direction of coupling (kg/mm)
δ : Core deviation (mm)

Gear:

The radial load applied to the axis on which a gear is directly engaged to the motor shaft is obtained by the following equation.

$$P = \frac{1}{980} \cdot \frac{T_{max}}{\frac{D}{2} \cos \alpha}$$

Where P : Radial weight (kg)
T_{max} : Maximum motor torque (N·m)
D : Gear pitch circle (cm)
α : Gear pressure angle (degree)

When the timing belt is used, obtain the total of the initial tension of the belt and the force by the load torque. For the calculation method, see the related document issued by the timing belt manufacturer.

(Note) 2. Cautions for mounting load (prevention of impact on shaft)

- When using the servomotor with keyway, use the screw hole at the end of the shaft to mount the pulley onto the shaft. When installing, first insert both screw bolts into the screw holes on the shaft, and press them in while tightening the nuts.
- When pulling out the pulley, use a pulley puller.
- When transporting the unit, do not put hands or ropes on the detector cover.
- When assembling, do not tap the shaft end with a hammer, etc.
  (The detector could be damaged.)

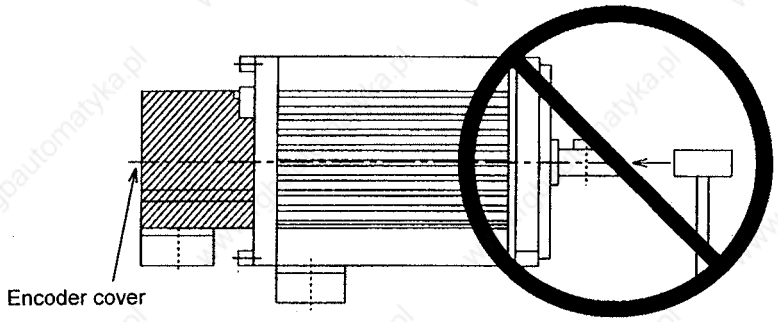

- The direction that the detector is installed on the servomotor cannot be changed.

3. Detectors

3.1 List of model names

(1) Relative position detection type

OHE 25K-6 : Standard encoder (for motors 500W and higher)
OHE 25K-85 : Small capacity motor encoder (for 200W and 300W motors)
OHE 25K-108 : Low inertia motor encoder
OHE 25K-ET : Ball screw end detection encoder

(2) Absolute position detection type

OHA 25K-4 : Standard encoder (for motors 500W and higher)
OHA 25K-85 : Small capacity motor encoder (for 200W and 300W motors)
OHA 25K-108 : Low inertia motor encoder
OHA 25K-ET : Ball screw end detection encoder

Refer to section 3.4 when using the serial pulse encoder.

3.2 Specification

Class	Type	Model name	Max. speed r/min	Power	Detector output	Output signal usage class
Motor shaft end detector	Relative position detection encoder	For standard: OHE 25K-6 For small capacity motor: OHE 25K-85 For low inertia motor: OHE 25K-108	3000	5VDC +0.25V –0.5V	A, B-phase 25000p/rev	Machine position detection (100,000P/R after multiplying by four)
					Z-phase 1p/rev	Zero point indexing
					U,V,W-phase 2p/rev	Motor polarity detection
		HA053/13 Motor built-in encoder	3000	5VDC +0.25V –0.5V	A, B-phase 2500p/rev	Machine position detection (10,000P/R after multiplying by four)
					Z-phase 1p/rev	Zero point indexing
					U,V,W-phase 2p/rev	Motor polarity detection
	Absolute position detection encoder	For standard: OHA 25K-4 For small capacity motor: OHA 25K-85 For low inertia motor: OHA 25K-108	3000	5VDC +0.25V –0.5V	A, B-phase 25000p/rev	Machine position detection (100,000P/R after multiplying by four)
					Z-phase 1p/rev	Zero point indexing
					Absolute value data	Absolute position detection Max. 32000 rev.
Ball screw end detector	Relative position detection encoder	OHE 25K-ET	3000	5VDC +0.25V –0.5V	A, B-phase 25000p/rev	Machine position detection (100,000P/R after multiplying by four)
					Z-phase 1p/rev	Zero point indexing
	Absolute position detection encoder	OHA 25K-ET	3000	5VDC +0.25V –0.5V	A, B-phase 25000p/rev	Machine position detection (100,000P/R after multiplying by four)
					Z-phase 1p/rev	Zero point indexing
					Absolute value data	Absolute position detection Max. 32000 rev.
(Reference) Machine end detector	Absolute value linear scale AT41–□ (↑ Scale effective length) * Mitsutoyo		Max. 50m/min.	5VDC ±0.5V	A, B-phase	Machine position detection (1μm/P after multiplying by four)
					Z-phase	Zero point indexing (Grid width 10mm)
					Absolute value data 1μm unit	Absolute position detection (Full stroke)
	MP scale system * Mitsubishi Heavy Industries * Product configuration: A/D converter, pre-amplifier (1 to 3-axis integrated) (1 unit/axis)		Max. 30m/min	Single phase 100/110V	A, B-phase	Machine position detection (1μm/P after multiplying by four)
					Z-phase	Zero point indexing (Grid width 2mm)
Note) This must be purchased from the manufacturer.	Other scales Use an incremental scale for the machine end that satisfies the conditions on the right.	* Use a scale with an A/B phase difference and Z-phase width of 0.1μsec or more at the maximum feed rate. * Use an A, B, Z-phase signal with differential output (RS-422 standard product) for the output signal. Phase difference: A-phase, B-phase, 0.1μ sec or more Output circuit: A, B, Z-phase; $\overline{A}$, $\overline{B}$, $\overline{Z}$-phase Z-phase: 0.1μ sec or more, Integer mm For a scale having multiple Z phases, select the one for which the distance between neighboring Z phases is an integral mm.				

3.3 Machine end detector outline drawing

(1) OHE 25K-ET

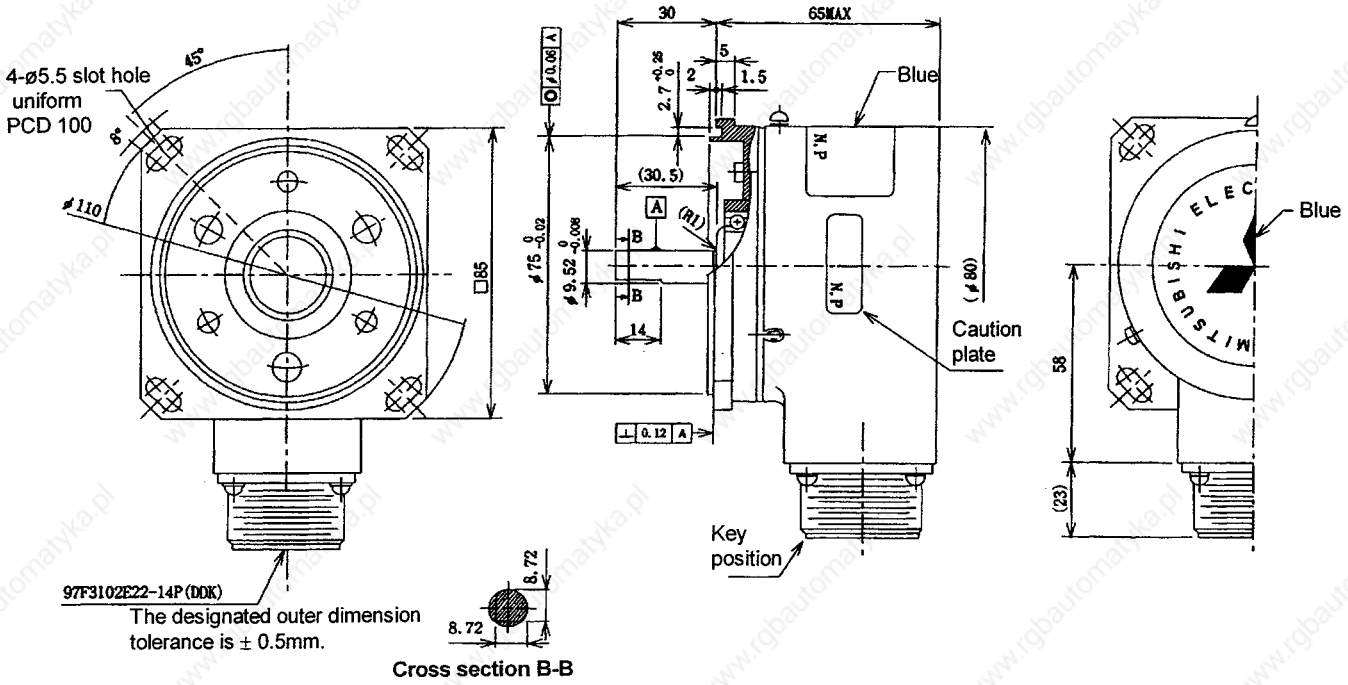

Weight	1.0kg or less
Moment of inertia	0.2×10^{-4}kg·m^2 or less
Friction torque	0.0196N·m or less
Thermal relay	Functions at 85 ± 5°C

Connector: 97F3102E22-14P (DDK)

Pin No.	Function	Pin No.	Function
A	A-phase signal	K	V-phase signal
B	$\overline{A}$ -phase signal	L	$\overline{V}$ -phase signal
C	B-phase signal	M	W-phase signal
D	$\overline{B}$ -phase signal	N	Case grounding
E	NC	P	NC
F	Z-phase signal	R	GND
G	$\overline{Z}$ -phase signal	S	+5VDC
H	U-phase signal	U	$\overline{W}$-phase signal
J	$\overline{U}$ -phase signal	T	Thermal relay
		V	Thermal relay

Cautions

* This is an incremental encoder for the ball screw end.
* The outline dimensions are the same as for the absolute value encoder, and only the nameplate color differs.

(2) OHA 25K-ET

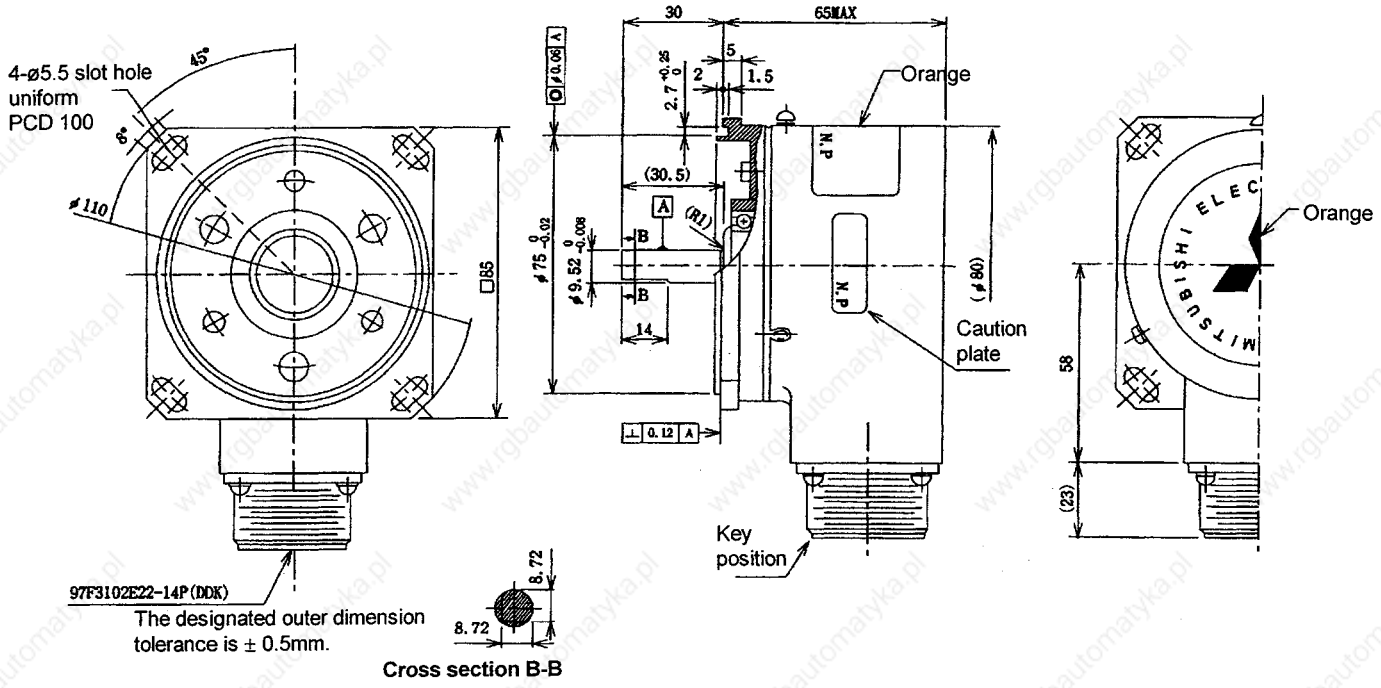

Weight	1.0kg or less
Moment of inertia	0.2×10^{-4}kg·m^2 or less
Friction torque	0.0196N·m or less
Thermal relay	Functions at 85 ± 5°C

Connector: 97F3102E22-14P (DDK)

Pin No.	Function	Pin No.	Function
A	A-phase signal	K	RQ (Request signal)
B	$\overline{A}$ -phase signal	L	$\overline{RQ}$ ($\overline{Request}$ signal)
C	B-phase signal	M	NC
D	$\overline{B}$ -phase signal	N	Case grounding
E	VB (Battery)	P	NC
F	Z-phase signal	R	GND
G	$\overline{Z}$ -phase signal	S	+5VDC
H	RX signal (Serieal absolute signal)	U	Thermal relay
		T	NC
J	$\overline{RX}$ signal ($\overline{Serieal\ absolute\ signal}$)	V	Thermal relay

Cautions

* This is an incremental encoder for the ball screw end.
* The outline dimensions are the same as for the absolute value encoder, and only the nameplate color differs.

3.4 Serial pulse encoder

3.4.1 Features

(1) With the serial pulse encoder, high resolution and high speed can be handled, allowing high resolution position detection to be selected.
(2) The detector resolutions include the following two types.
① 1,000,000p/rev (ABS/INC)
② 100,000p/rev (ABS/INC)
Various detection units can now be handled according to the machine specifications.
(3) The signal wiring can be decreased compared to the conventional A, B, Z signals.
(4) The serial pulse encoder series is available for the standalone type encoder (ET Series). However, there are restrictions to the combination with conventional parts.
(5) The L dimensions are approx. 25mm shorter than the conventional part for the small capacity servomotor (200/300W).
(6) By achieving a smooth speed waveform, an improved effect of the new robust control (disturbance observer, etc.) function that carries out estimation from the speed can be anticipated.

3.4.2 Types

(1) Motor end encoder

	Type	Resolution
Absolute value detector	OSA105	1,000,000p/rev
	OSA104	100,000p/rev
Incremental detector	OSE105	1,000,000p/rev
	OSE104	100,000p/rev

(2) Standalone encoder (machine end detection)

	Type	Resolution
Absolute value detector	OSA105ET	1,000,000p/rev
	OSA105ET1	
	OSA104ET	100,000p/rev
	OSA104ET1	
Incremental detector	OSE105ET	1,000,000p/rev
	OSE105ET1	
	OSE104ET	100,000p/rev
	OSE104ET1	

The ET1 has notches. (Refer to the outline drawing in section 3.4.3.)

3.4.3 Outline drawing

(1) The outline dimensions of the medium capacity series (HA40N and higher) motor and detector are the same as the M500 Series.

(2) For the small capacity series (HA23N/33N), the motor L dimension (detector) is shorter than the current dimensions of the M500 Series.

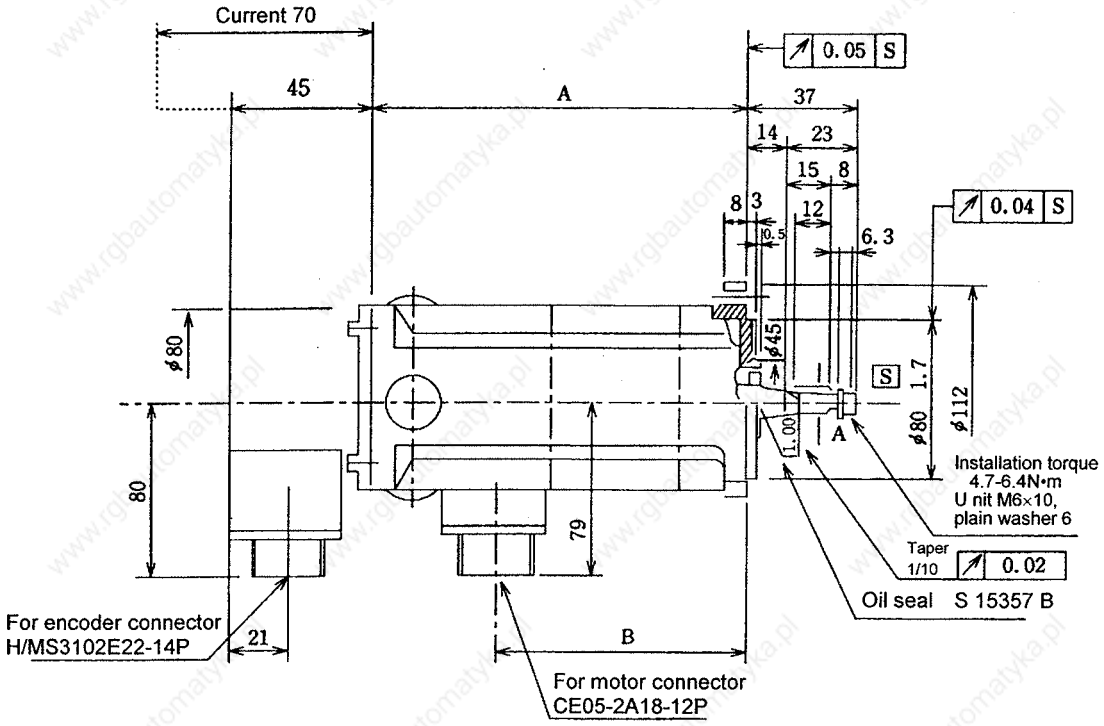

Motor type	Changed dimensions		Weight (kg)
	A	B	
HA23NC-TS	125	81	3.5
HA33NC-TS	155	111	4.5

The changed dimensions are equivalent to the current dimensions.

(3) Standalone encoder (ET Series) outline drawings

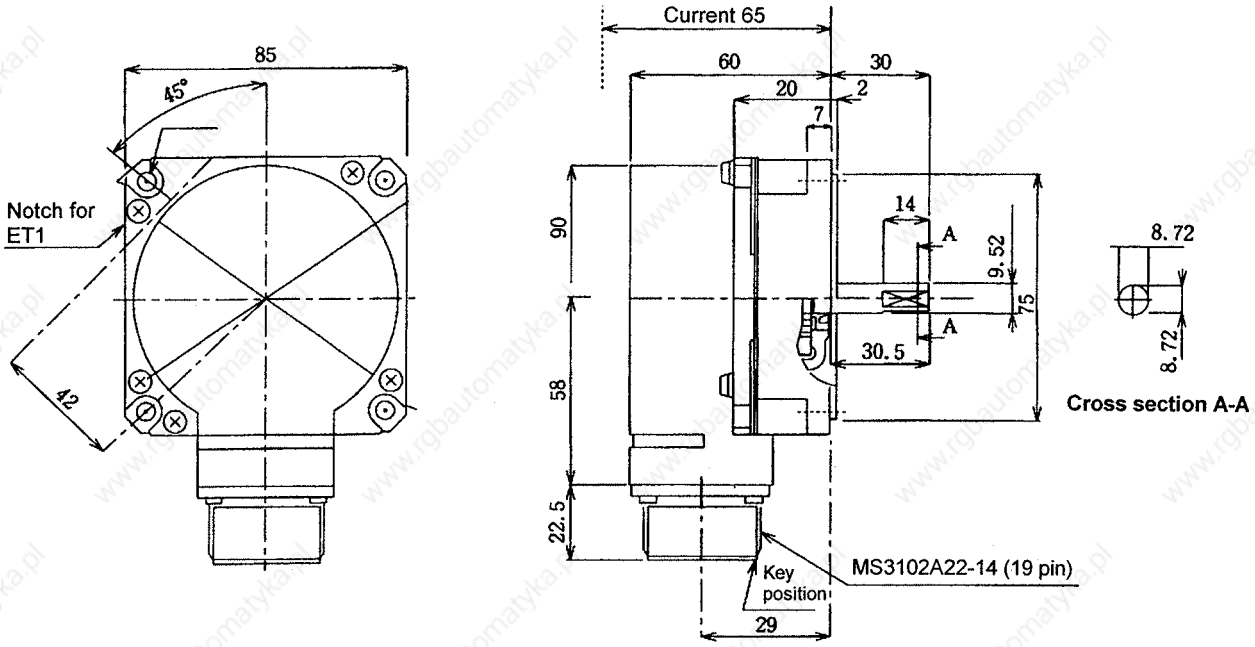

3.4.4 Cable connection diagram

⚠ CAUTION
Do not mistake the connection when manufacturing the detector cable. Failure to observe this could lead to runaway.

The conventional CNV2 and 3 can be used for the cable.
To reduce the amount of wiring, the following serial encoder dedicated cable can be used.
In this case, the conventional detector cannot be used.

(1) CNV12, CNV13 cable (L ≤ 20m)

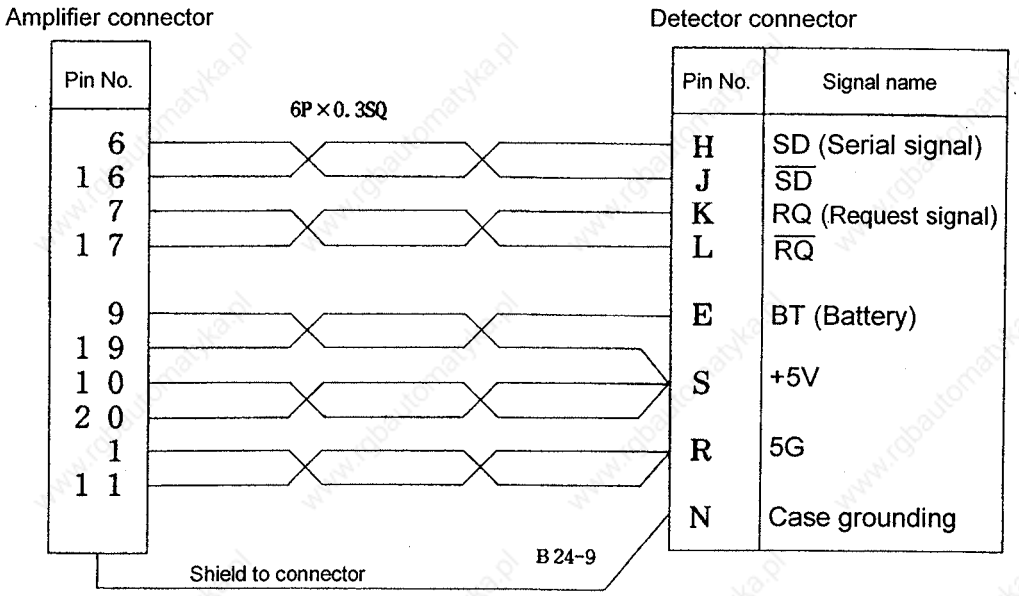

(2) CNV12, CNV13 cable (20 ≤ L ≤ 30m)

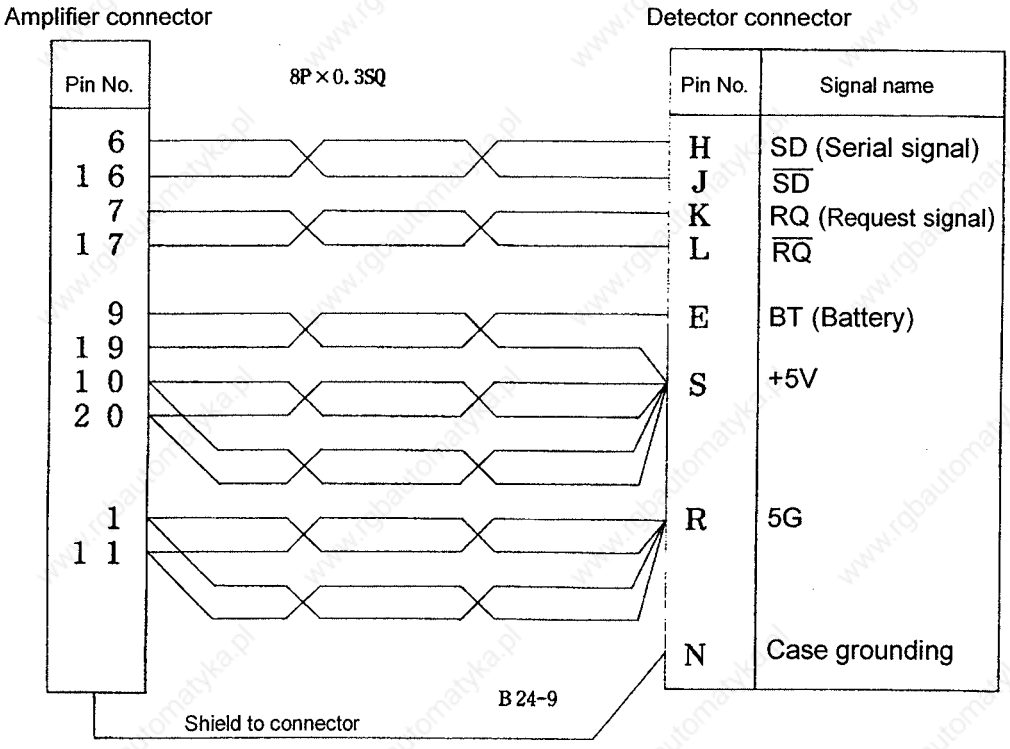

The same cables as the conventional CNV2 and 3 can be used for the amplifier side and detector side connectors.

3.4.5 Compatibility

(1) Servo amplifier

- The amplifier types that correspond to the serial pulse encoder for the MDS-A Series are the same. The indication has been change as shown below.
- The MDS-B Series has been compatible from the start.

Amplifier type indication label on upper left of front panel
Type indicated with black characters on white base → Type indicated with black characters on yellow base

The servo amplifier itself can be driven by the current encoder.
The cables used for the current encoder can be used for the detector cable.

(2) Servomotor

The servomotor type is the same as the current type.

(3) Software

- The servo software corresponding to the serial pulse encoder is as follows for the MDS-A Series.

  BND-510W000-B0 and above

- Parameters requiring changes

① For 100,000 pulse encoder
The same parameter settings as the conventional detector can be used.

No.	Name	Servo system	Current M500 compatible encoder		Serial pulse encoder	
			OHE25K	OHA25K	OSE104	OSA104
SV025	MTYP	Semi-closed	00**	11**	00**	11**
		Closed	80**	81**	80**	81**

② For 1,000,000 pulse encoder

No.	Name	Servo system	Current M500 compatible encoder		Serial pulse encoder
			OHE25K	OHA25K	OSE105/OSA105
SV025	MTYP	Semi-closed	00**	11**	22**
		Closed	80**	81**	82**
SV019	RNG1	Semi-closed	100	100	1000
		Closed	#	#	#
SV020	RNG2	Common	100	100	1000

- Set the motor type for *.
- Set the machine end detector resolution for #.
  (Resolution per ball screw pitch: k pulse)

(4) Restrictions

- When using ball screw end detection, the correct combination of the motor end and ball screw end detector is limited to those shown with "◎" in the following table.
- When using the OHA25K-ET ball screw end detector and configuring an absolute position system, alarm 18 (initial communication error) will occur, and operation will not be possible.
- Table of detector combinations for ball screw end detection
  (All combinations are possible when using as an incremental system.)

Motor end detector	Ball screw end (machine end) detector			
	OHE25K-ET	OHA25K-ET	OSE104ET/105ET	OSA104ET/105ET
OHE25K	◎	◎	○	○
OHA25K	◎	◎	○	○
OSE104/105	○	×	◎	◎
OSA104/105	○	×	◎	◎

◎ : Correct combination, ○ : Not correct, but usable connection, ×: Use not possible

3.4.6 Maintenance

⚠ WARNING

1. Wait at least 10 minutes after turning the power OFF before starting maintenance or inspections. Failure to observe this could lead to electric shocks.
2. Only qualified persons must carry out the maintenance or inspections. Failure to observe this could lead to electric shocks. Contact your dealer for repairs or part replacements.

If any fault occurs in the configuration components, carry out service with the following procedures. Always follow the compatibility described in section 3.4.5 when servicing.

(1) Encoder

Always prepare the service parts for the conventional type and the serial encoder. As a rule, replace the detector with the same type as the original detector.
If changes are to be made, always confirm the compatibility and usable combination.

- Confirmation of encoder type
  Confirm the encoder type on the nameplate attached to the motor cover, or displayed on the servo monitor screen.

Servo Monitor (SERVO DIAGNOSIS) Screen

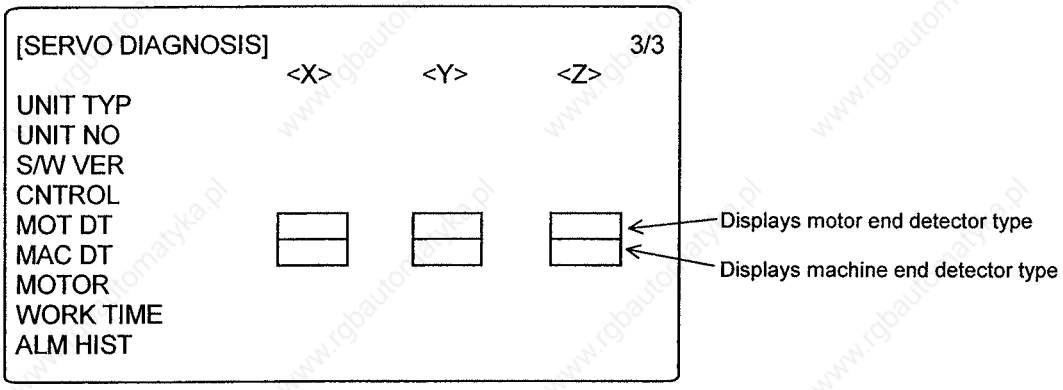

(2) Motor

If a fault occurs in the motor unit, replace the motor and encoder as a set.

- If the prepared encoder is the conventional OHE25K/OHA25K, it can be used in that state. Note that if the cable is dedicated for the serial encoder (refer to section 3.4.4 Cable connection diagram), the OHE25K/OHA25K cannot be used.
- If the prepared encoder is the serial encoder OSE/OSA, confirm that the servo drive type seal is the new yellow type, and that the servo software version is "B0" and above.

(3) Servo drive/servo software version

- The units have been changed to the new type from production starting in October 1995. Thus, all servicing of this type of servo drive is covered.
  Carry out servicing with this new type of servo drive.
- If the conventional encoder is installed, servicing is possible with the conventional type of servo drive.
  For the compatible servo software version use "B0" and above.

(4) Encoder cable

- The cable can be used commonly if it is the conventional type.
- When using the serial encoder dedicated cable, OHE25K/OHA25K cannot be used.

(5) Servo parameters.

- Changes are not required.

4. Servomotor and Detector Installation

4.1 Installation

⚠ CAUTION
1. Do not hold the cable, shaft and detector when transporting the servomotor. Failure to observe this could lead to damage or injuries. 2. Use the suspension bolts on the servomotor only to transport the servomotor. Do not transport the servomotor when it is installed on the machine. 3. Always install the servomotor with reduction gears in the designated direction. Failure to observe this could lead to oil leaks, fires and damage. 4. Securely fix the servomotor onto the machine. If fixed insufficiently, the unit could come off during operation and lead to injuries. 5. When connecting a coupling to the servomotor shaft end, do not apply an impact by using a hammer, etc. Failure to observe this could lead to detector damage. 6. Install a cover, etc., on the shaft so that the rotating sections of the servomotor are not contacted during operation. 7. Do not apply a load exceeding the tolerable load on the servomotor shaft. Failure to observe this could cause the shaft to break and to injuries.

(1) Precautions for oil and water

a. Since the servomotor is not water/oil resistant do not splash cutting fluid or lubrication oil on the servomotor. If cutting fluid, etc., enters the servomotor or the detector, the insulation of the motor coil may be damaged or the detector failure may occur.
b. If cutting fluid, etc., splashes on the motor, put a protection cover on the motor. Check the joints, bends, shape, and dimensions of the protection cover.
c. Use the oil-proof specifications wiring tube and oil-proof connector when using the servomotor in an environment where it will be exposed to large amounts of cutting fluid or the protection cover is not adequate.
d. Do not use the servomotor if part of the servomotor is submerged in oil or water. When the servomotor is located near the floor, install a water drain path on the floor to direct the flow. Do not clog the water drain path with cutting chips.
e. Check the drain path of oil and water on the moving table and the slide cover.
Be aware of the following conditions.
   1) When the table arrives at a specific position, the drain hole comes to the upper section of the motor. Thus, oil or water splashes the motor.
   2) Depending on the movement of the slide cover and table, oil or water which stays on the slide cover or table splashes the motor.
   3) Depending on the shrinkage or expansion of the cover, oil or water which stays on the slide cover leaks from the wiper section and drops on the motor.
f. The servomotor should be installed in a well ventilated place where oil and water will not splash it, and where it can be easily installed or removed.

(2) Precautions against gear oil

a. Although the servomotor can be installed horizontally or at the upper or lower end of the axis, when the servomotor is installed at the upper end, take extra measures on the machine side to avoid oil from the gear box, etc., from entering the motor. In this situation, the oil seal of the motor is not sufficient protection.
b. Oil level and pressure in the gear box
The oil level in the the gear box where the servomotor is horizontally mounted should be always lower than the oil seal lip of the servomotor shaft (both in the stop and rotation states). If the oil level is higher than the oil lip, oil may enter the motor. Some servomotors are not provided with shaft end oil seals. To prevent the inner pressure of the gear box from increasing, provide an intake-hole on the gear box.

[Machine side]

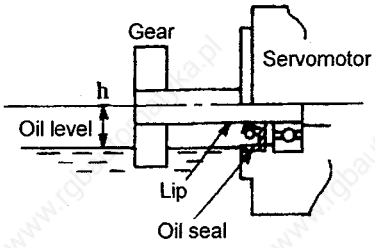

Model	Height from center of motor shaft h (mm)
HA053 HA13	8
HA23N HA33N	10
HA40N HA43N HA80N HA83N HA50L HA100NL HA150NL HA53NL HA103NL HA153NL	20
HA100N, HA103N, HA200N, HA203N, HA300N, HA303N, HA700N, HA703N HA200NL, HA300NL, HA203NL, HA303NL	25
HA900N HA500NL HA503NL HA-LH11K2	30
HA-LH15K2	40

(3) Detector

a. When transporting and installing the servomotor, avoid shocks to the detector on the servomotor. To prevent items from hitting the detector workers from getting on the detector and tools or workpieces from dropping on the detector, install a protection cover around the detector. Any design where a coupling should be struck to the motor shaft should be avoided to prevent damage to the detector.

b. The detector cover for motors other than HA053, HA13, HA23N and 33N can be turned 90°, but design the machine so that it faces the "A" direction as a standard.
The direction of the detector connector for HA053 and HA13 cannot be changed.
The parameter settings must be changed when the connector is faced in the B, C or D directions for the HA23N and 33N motors. (The setting changes are complicated and the combinations may be mistaken, so the connector direction should not be changed if possible.)

Symbol of direction of detector connector (The "A" direction is standard.)

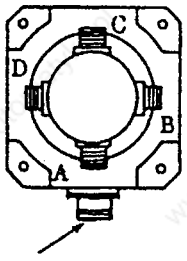

c. The detectors for motors other than HA23N and 33N are fixed to the motor with pins. The HA23N and 33N motor detectors are fixed to the motor with screws, but the polarity must be matched correctly when installing. If this is ignored and the detector is replaced or the detector connector direction is changed, the control will not be possible, and the motor may run out of control. The relation of the detector and motor position should not be changed after delivery from Mitsubishi.

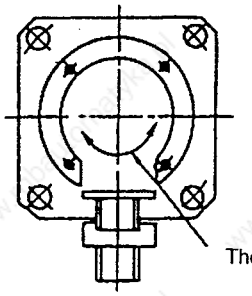

- When using the low inertia motor and IP67 compatible motor, do not remove the encoder and encoder cover.
The magnetic pole position of the low inertia motor has been adjusted when the encoder was installed.
The IP67 compatible motor has been tested in water with the encoder and cover installed.

(4) Connector and cable

a. The connector should be located so that it faces downward.
When the motor is installed vertically or on an incline, provide a cable trap.

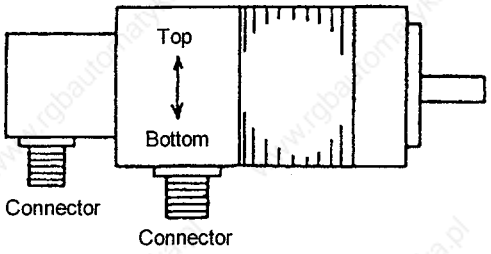

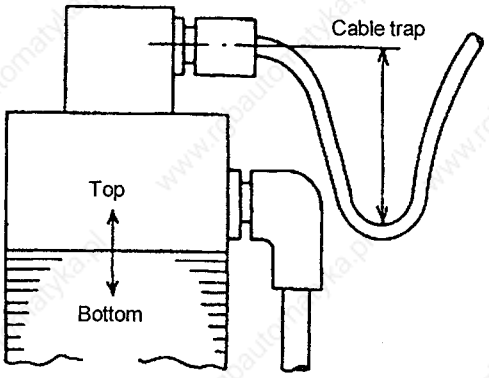

b. The standard cannon plugs are not waterproof.

c. The cables may lead oil and water to the motor and the detector, causing negative effects. Avoid allowing the cables to lead oil and water to the motor and the detector, and do not allow the cables to dip in oil and water (see the following figure).

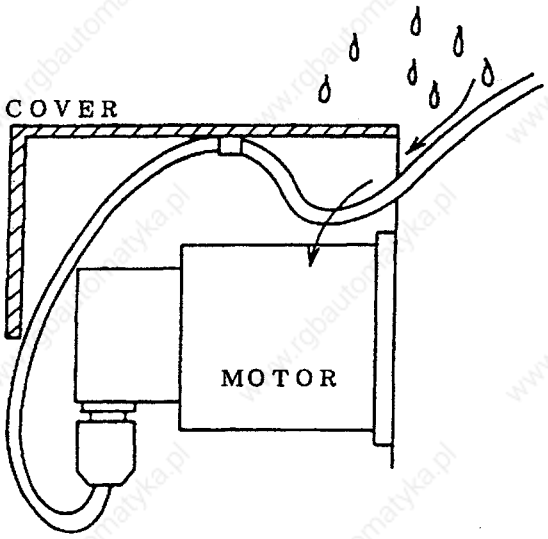

<Poor> Respiration

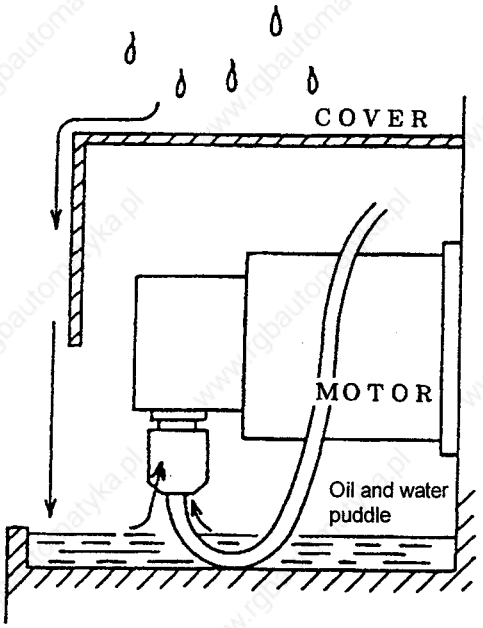

<Poor> Capillary tube action

d. Adhere to the cable clamping method and avoid bending or stressing the cable connections under the dead weight of the cable.
If the motor shifts, the cable bending radius should be determined according to the required bending life and the cable type.

e. Prevent sharp chips from cutting the cable's outer sheath and from being abraded by contact with any edge of the machine. In addition, prevent the cable from being trampled by people and automobiles.

(5) Attaching/detaching connectors

a. While the machine is turned on, do not connect or disconnect any connector to or from the machine, otherwise, the motor may be damaged. Also, avoid dropping the machine and abrupt motor start, or generation large arcs may occur.
It is recommended to tie each cannon plug with a wire.
b. Even when the power is turned off, the absolute value detector is backed up by a battery. Thus, when the detector cable is disconnected, the absolute position is lost. It is recommended to tie this plug with a wire and indicate a warning sign "do not disconnect this plug even while power is turned off."
c. The cannon plugs are tightened manually. Provide enough space to correctly tighten each cannon plug.

(6) Applications involving vibration

Tie the cannon plugs and cable clamps of the motor and detector with wires. Clamp carefully to avoid vibration stress and the stress of the cable dead weight on the cable connections, both of which may affect the relationship between the cable finish diameter and the clamp size. In addition, check that the clamps are not loose.
Include the retightening of the cannon plugs and the clamps in the machine manual as a periodical inspection item.

● Safety holes for protection against connector separation

If the coupling nut has safety holes, when the connector is exposed to strong shock and vibration, pass a wire through the holes and fix the connector to protect the connector from being disconnected. Under normal conditions, this treatment is not required (extracted from a catalog).

- Since the cable clamp has two safety holes which are similar to the connector, it can also be fixed.
- The safety holes differ slightly in structure depending on the manufacturer.

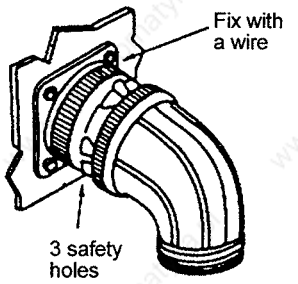

● Fixing wire (0.813ø annealed stainless steel wire)

QQ-W-423 FORM-1 FS304 CD-A 0.032 (inches) is recommended because of its mechanical strength and easy machining.

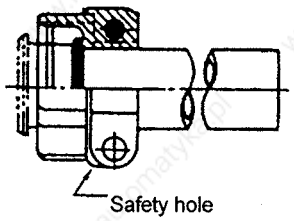

● Optimum tightening torque for coupling nuts

The connector is designed so that it can be easily tightened by turning the coupling nut manually without using a special tool. When the connector is exposed to vibration, it should be fixed with a wire. There is no regulation for the tightening torque in the MIL Standards.
When this connector is used for an airplane, the connector should be fixed with a wire by the user.

(7) Any design which requires modification, disassembling, or additional machining of the motor should be avoided.

4.2 Coupling with the load

The motor shaft is coupled to the machine by one of the following methods:
The direct coupling method, in which the motor shaft is coupled directly to the machine by a flexible joint.
The gear method, in which the motor speed is reduced when using a gear.
The timing belt method, in which the motor shaft is coupled to the machine using a timing belt.
This method is an important factor that affects the machine performance.
The following table outlines comparisons among the three methods.

	Noise	No lubri-cation	Back-lash	Rigid-ity	Reliability of coupling	Life	Torque up by speed reduction	Degree of freedom of installing motor	Cause of motor shaft breakage
Direct coupling	○	○	○	○	○ Looseness of bolt	○	×	×	Misalignment of shaft center
Gear	×	×	△	△	△ Breakage of teeth	△	○	○	Too small backlash, undersized pitch diameter
Timing belt	△	○	○	×	× Breakage of belt	×	○	○	Excess belt tension, undersized pitch diameter

(1) Direct coupling

When a load is directly coupled to the motor shaft, use a flexible joint. Although the flexible joint can absorb misalignment, to maximize the durability of the machine, it is necessary to completely match the load with the shaft center during the initial installation. In addition, it is necessary to periodically adjust the misalignment. When the flexible joint is used, carefully select a joint according to the environmental conditions and operate it according to the specification manual issued by the manufacturer.
Although a coupling whose rigidity is low decreases the alignment accuracy, it is not preferable for the servomotor. To use the submicron specification, skillfully align it, and use a high rigidity coupling. When such conditions are not satisfied, the servo performance cannot be maximized, (the gain cannot be increased) and the motor shaft may break.

Example of direct coupling with load

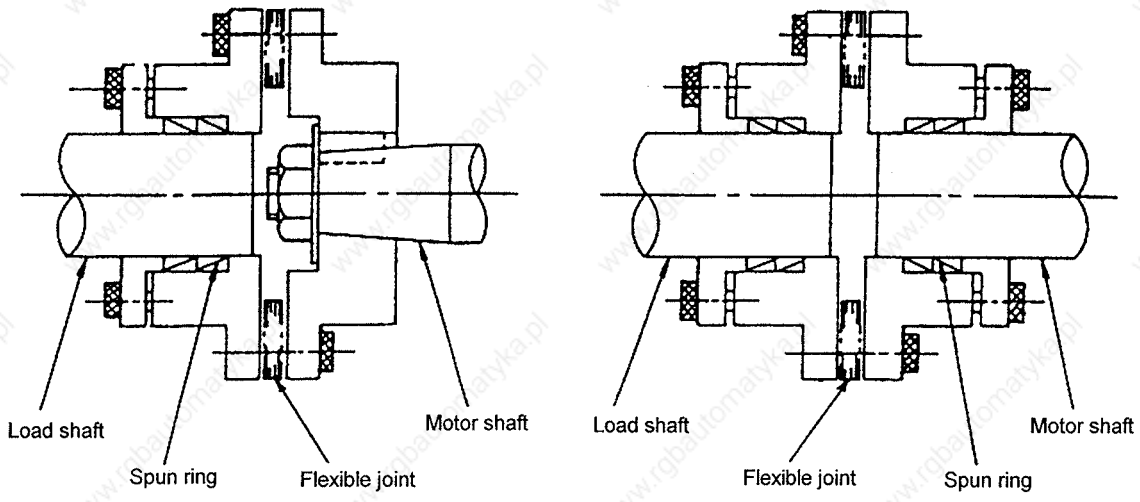

(a) In the case of tapered shaft **(b) In the case of straight shaft**

(2) Gear coupling

To obtain a large torque by reducing speed, a gear is used between the motor shaft and the load.
The accuracy of the gear and the amount of backlash depend largely on the accuracy of the machine positioning and the noise of the machine operation.
In the gear coupling method, it is necessary to properly select the accuracy and the amount of the backlash.
In the gear coupling method, take measures to prevent oil from entering the motor. For details, see section 4.1(2).

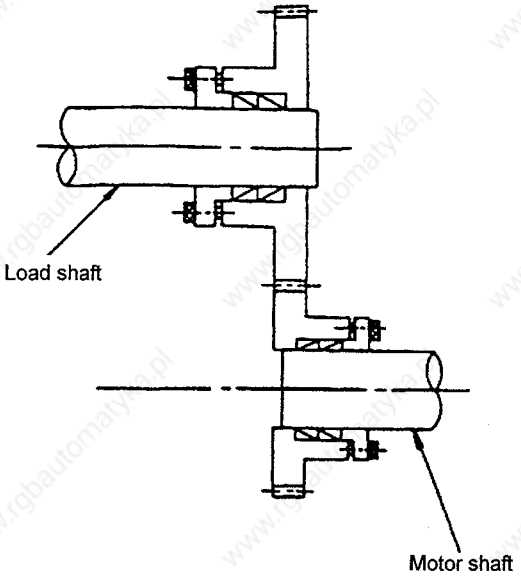

Example of coupling with load using gear

(3) Spun ring

Since the output shaft of a servomotor of 2 kW or greater does not have a key groove, it is necessary to use a frictional joint such as a spun ring for coupling with the load shaft.
For details of the usage of the spun ring, contact the manufacturer or dealer.

● **Table of characteristics and dimensions RfN8006**

d × D mm	L mm	ℓ mm	Effective contact area Ft mm^2	Note 1 P_O N	Note 2 P_A N	Transmission torque Mt N·m	Tangent transmission force Pax N	Gap xmm Number of set 1	2	3	4	Weight G kg
11×14	4.5	3.7	128	7502	6933	8.43	1540	2	2	3	3	0.00198
24×28	6.3	5.3	400	8189	21182	56.88	4707	3	3	4	5	0.0068
35×40	7	6	659	9905	34912	135.33	7747	3	3	4	5	0.014

Notes 1. Axial pressure necessary for allowing the engagement clearance to be 0.
2. Net pressure force necessary for producing transmission force

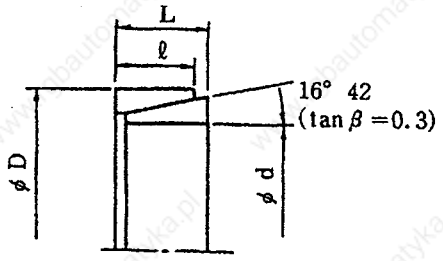

Outline dimension drawing of RfN8006

Various manufacturers produce frictional joints as substitutes of spun ring.
The specifications, dimensions, etc., of the products may differ depending on the manufacturers.
When using them, carefully check the specifications.

(4) Taper gauge

The standard shaft end of a servomotor of 1 kW or less is a tapered shaft. When the taper should be matched on the machine side, a copy gauge should be made in accordance with the master gauge of Mitsubishi Electric.
The copy gauge should be directly ordered through the following manufacturer. Note the following items.

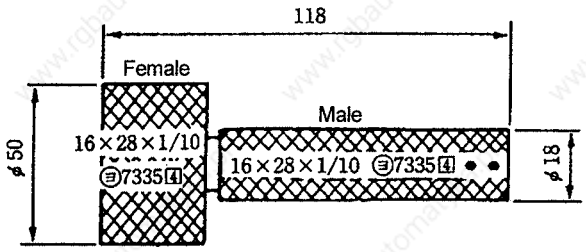

1) Place order with:
   Chubu Seiki Seisakusho
2) Requirement:
   Taper gauge (copy): 16 × 28 × 1/10
   Mitsubishi Nagoya Works should have the master of the copy gauge.
   (㊐ 7335)

(5) Other reference items

The shapes and dimensions of the servomotor mounting flange section and the shaft end conform to the standards of Japan Machine Tool Industry Association MAS402.
The only available coupling methods for the servomotor for the MCI machine tool are the method using the straight shaft without the key (spun ring) and the method using the taper shaft end.
The method of the straight shaft with the key cannot be practically used because of the wear caused by the backlash of the key.
The method by which the motor shaft and the boss are simultaneously machined, and a taper pin is used to couple them, should be avoided because a service motor is not provided. A motor modified in such a manner cannot be repaired and the spare parts may not be supplied.
For the strength of the motor shaft, see section 2.11.
For the operation of the electromagnetic brake when a timing belt is coupled in the vertical axis, see section 2.9 (3). Assuming that the diameter of ball screw is Dm (mm) and the speed is N (rpm), the following relation is satisfied.

$DmN < 70000$.

This performance can be enhanced by controlling the lubrication and cooling methods.
As the standard for precision ball screws, JIS-B-1192 has been issued.

Tightening torque for tapered shaft end screw.

The screw shaft will be damaged if the tightening torque of the tapered shaft end screw is too tight. Follow the values given below when tightening.

Model	Tapered shaft end screw tightening torque	Reference	
		Screw size	Tightening torque
HA23N HA33N	4.71 to 6.37N·m	M6 × 1.0	Approx. 300kg
HA40N HA43N HA80N HA83N	22.56 to 30.40N·m	M10 × 1.25	Approx. 900kg

5. MDS-A/B-V1 Servo Drive

5.1 Model configuration

MDS – A – V1 – □

MDS – B – V1 – □

Servo drive capacity class symbol

Symbol	Capacity kW	Applicable motor			
		Standard 2000r/min	Standard 3000r/min	Low inertia 2000r/min	Low inertia 3000r/min
01	0.1		HA053 HA13		
03	0.3		HA23N HA33N		
05	0.5	HA40N	HA43N	HA50NL	
10	1.0	HA80N	HA83N	HA100NL	HA53NL
20	2.0	HA100N		HA150NL HA200NL	HA103NL HA153NL
35	3.5	HA200N	HA103N	HA300NL	HA203NL
45	4.5	HA300N	HA203N	HA500NL	HA303NL
70	7.0	HA700N	HA303N		HA503NL
90	9.0	HA900N	HA703N		
110	11.0			HA-LH11K2	
150	15.0			HA-LH15K2	

* The V1-110/150 has been added from the MDS-B Series.
The V1-110/150 servo drive unit does not have built-in dynamic brakes, so always install an external dynamic brake unit.

5.2 Servo drive specifications

	Unit	Servo drive model name										
		MDS-A/B-									MDS-B-	
		V1-01	V1-03	V1-05	V1-10	V1-20	V1-35	V1-45	V1-70	V1-90	V1-110	V1-150
Applicable motor		HA053 HA13	HA23N HA33N	HA40N HA43N HA50NL	HA80N HA83N HA100NL HA53NL	HA100N HA150NL HA200NL HA103NL HA153NL	HA200N HA103N HA300NL HA203NL	HA300N HA203N HA500NL HA303NL	HA700N HA303N HA503NL	HA900N HA703N	HA-LH11K2	HA-LH15K2
Output voltage	Vrms	155										
Rated output current	Ams	0.95	2.9	3.4	6.8	13	16	28	33.5	42	68	87
Stall current	Arms	1.4	3.0	5.0	8.8	18.2	25	44	55	68	84	100
Maximum output current	Arms	3.9	8.1	17	28	42	57	85	113	141	204	260
Maximum output torque (During combination with motor) Same order as applicable motor	N·m (kg·cm)	0.69 (7) 1.37 (14)	2.75 (28) 5.6 (57)	14.2 (145) 10.2 (104) 13.0 (133)	25.5 (260) 19.2 (196) 20.7 (213) 14.1 (144)	42 (428) 31 (320) 32 (323) 22.5 (229) 22.8 (233)	60 (610) 40 (410) 52 (530) 37 (380)	87 (893) 56 (570) 72 (740) 60 (610)	120 (1220) 80 (814) 78 (795)	153 (1565) 105 (1072)	158 (1610)	215 (2190)
Control system		Sine wave PWM system										
Main circuit system		Transistor inverter (Intelligent power module using IGBT)										
Braking		Regeneration brake and dynamic brake										
Dynamic brakes		Built-in									External	
Tolerable load inertia		As a guideline, less than 2.5 times the motor inertia										
Tolerable environmental temperature	°C	0° to 55°C										
Tolerable environmental relative humidity	%	90% or less (with no dew condensation)										
Storage temperature	°C	–15° to 70°C										
Storage relative humidity	%	90% or less (with no dew condensation)										
Atmosphere		No harmful gas and dust										
Tolerable vibration	m/s^2 (G)	4.90m/s^2 (0.5G)										
Tolerable shock	m/s^2 (G)	Acceleration: 49.03m/s^2 (5G)										
Maximum heat dissipation	W	Refer to the Chapter I Servo/Spindle System Configuration.										
Weight	kg	3.5	3.5	3.5	4.5	4.5	4.5	6.0	7.0	7.0	10.0	10.0
Capacity	kW	0.1	0.3	0.5	1.0	2.0	3.5	4.5	7.0	9.0	11.0	15.0
Torque limit range	%	0 ~ 100%										
Noise	dB (A)	Less than 55dB										

5.3 Connection of dynamic brake unit

The V1-110/150 servo drive unit does not have built-in dynamic brakes, so always install an external dynamic brake unit.

Model name	Coil specification	Compatible amplifier
MDS-B-DBU-150	24VDC 160mA	V1-110/150

(1) When using only dynamic brake unit

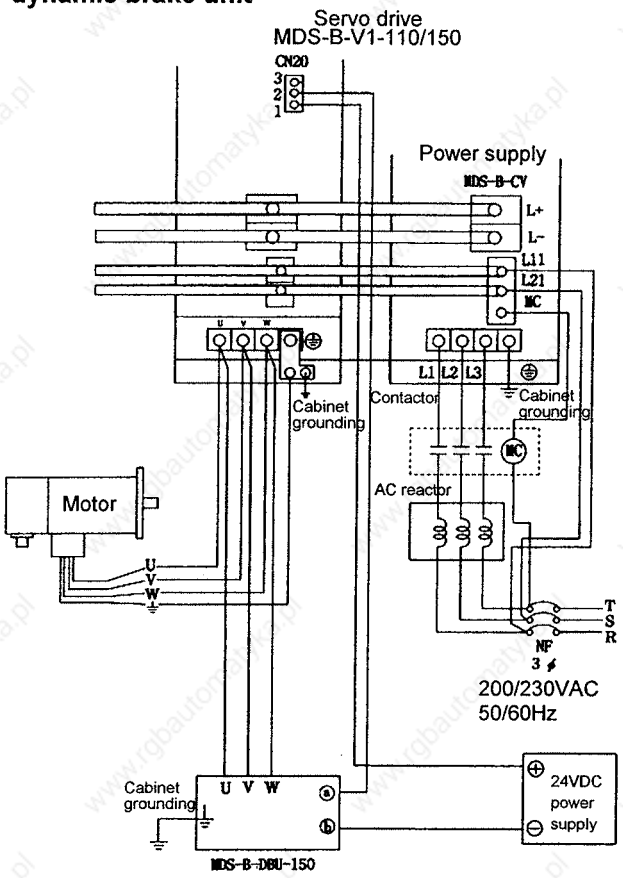

(2) When using dynamic brake unit + magnetic brakes (combination use)

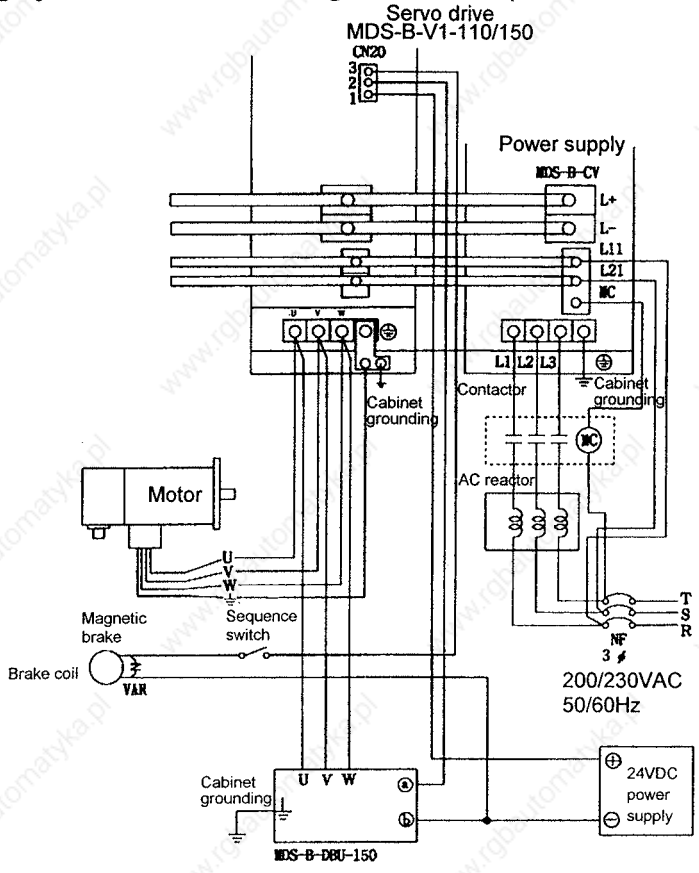

5.4 Hardware setting

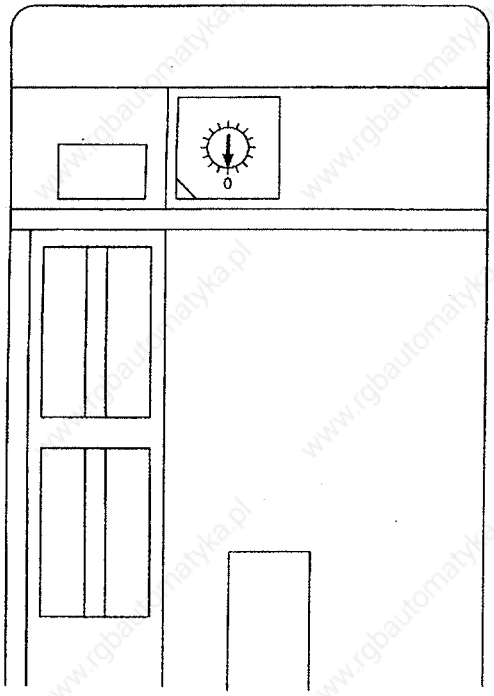

Function	Setting	Meaning
Axis No. setting CS	0	1st axis
	1	2nd axis
	2	3rd axis
	3	4th axis
	4	5th axis
	5	6th axis
	6	7th axis
	7 ~ E	Not usable
	F	Not used axis selection

The servo amplifier axis No. can be set by opening the upper lid (next to LED status display window) on the top of the MDS-A/B-V1 servo amplifier, and turning the rotary switch. When the rotary switch is set to "F" and the servo amplifier power is turned on, that axis will not be controlled. Thus, set axes that are not being used to "F". (The communication with the NC will not take place during initialization, and an alarm will not occur.)
In the above example, the 1st axis is set.

5.5 Parameter settings

> **⚠ CAUTION**
>
> Do not make remarkable adjustments or changes of the parameters as the operation may become unstable.

(1) Parameter screens

The servo parameters are set on the NC [M_PARAM] screens.
Examples of the screen displays are shown for the 14" CRT screen.
There are a total of 64 servo parameters. Screen page 1 shows the parameters regarding the specifications, and page 2 an excerpt of the parameters used for adjustment. Pages 3 and following are all parameters for SV001 to SV064.
The parameters can be changed from any screen.

[SERVO PARAM] M_PARAM 5. 1/6

#			(X)	(Y)	(Z)	(W)	(A)	(C)
1	SPEC	(HEX)	0000	0000	0000	0000	0000	0000
2	MTYP	(HEX)	0002	0002	0002	0002	0002	0002
3	PTYP	(HEX)	0000	0000	0000	0000	0000	0000
4	SSF1	(HEX)	0000	0000	0000	0000	0000	0000
5	SSF2	(HEX)	0000	0000	0000	0000	0000	0000
6	PC1		1	1	1	1	1	1
7	PC2		1	1	1	1	1	1
8	PIT		10	10	10	10	10	10
9	RNG1		100	100	100	100	100	100
10	RNG2		100	100	100	100	100	100
11	PGN		33	33	33	33	33	33

#(11)AXIS<X>DATA(33)

BASE1 | BASE2 | AXIS | ZP-RTN | SERVO | MC-ERR | MACRO | $-SELECT | MENU

[SERVO PARAM] M_PARAM 5. 2/6

#			(X)	(Y)	(Z)	(W)	(A)	(C)
1	PGN2		99	99	99	99	99	99
2	YGN		150	150	150	150	150	150
3	VIA		682	682	682	682	682	682
4	VIL		0	0	0	0	0	0
5	FFC	(%)	0	0	0	0	0	0
6	JL	(%)	150	150	150	150	150	150
7	FHz	(Hz)	350	350	350	350	350	350
8	TOF	(%)	-20	-20	-20	-20	-20	-20
9	LMC1		30	30	30	30	30	30
10	LMC2		40	40	40	40	40	40
11	OVS1		25	25	25	25	25	25
12	OVS2		35	35	35	35	35	35

#(11)AXIS<X>DATA(25)

BASE1 | BASE2 | AXIS | ZP-RTN | SERVO | MC-ERR | MACRO | $-SELECT | MENU

[SERVO PARAM] M_PARAM 5. 3/6

#		(X)	(Y)	(Z)	(W)	(A)	(C)
1	SV001	1	1	1	1	1	1
2	SV002	1	1	1	1	1	1
3	SV003	33	33	33	33	33	33
4	SV004	99	99	99	99	99	99
5	SV005	150	150	150	150	150	150
6	SV006	150	150	150	150	150	150
7	SV007	0	0	0	0	0	0
8	SV008	682	682	682	682	682	682
9	SV009	1024	1024	1024	1024	1024	1024
10	SV010	1024	1024	1024	1024	1024	1024
11	SV011	256	256	256	256	256	256
12	SV012	256	256	256	256	256	256
13	SV013	500	500	500	500	500	500
14	SV014	500	500	500	500	500	500
15	SV015	0	0	0	0	0	0
16	SV016	40	40	40	40	40	40

#(14)AXIS<X>DATA(500)

BASE1 | BASE2 | AXIS | ZP-RTN | SERVO | MC-ERR | MACRO | $-SELECT | MENU

[SERVO PARAM] M_PARAM 5. 4/6

#		(X)	(Y)	(Z)	(W)	(A)	(C)
17	SV017	0000	0000	0000	0000	0000	0000
18	SV018	10	10	10	10	10	10
19	SV019	100	100	100	100	100	100
20	SV020	100	100	100	100	100	100
21	SV021	150	150	150	150	150	150
22	SV022	60	60	60	60	60	60
23	SV023	2	2	2	2	2	2
24	SV024	50	50	50	50	50	50
25	SV025	0002	0002	0002	0002	0002	0000
26	SV026	2	2	2	2	2	2
27	SV027	0000	0000	0000	0000	0000	0000
28	SV028	0	0	0	0	0	0
29	SV029	400	400	400	400	400	400
30	SV030	64	64	64	64	64	64
31	SV031	25	25	25	25	25	25
32	SV032	-20	-20	-20	-20	-20	-20

#(25)AXIS<X>DATA(0000)

BASE1 | BASE2 | AXIS | ZP-RTN | SERVO | MC-ERR | MACRO | $-SELECT | MENU

[SERVO PARAM] M_PARAM 5. 5/6

#		(X)	(Y)	(Z)	(W)	(A)	(C)
33	SV033	0000	0000	0000	0000	0000	0000
34	SV034	0000	0000	0000	0000	0000	0000
35	SV035	0000	0000	0000	0000	0000	0000
36	SV036	0000	0000	0000	0000	0000	0000
37	SV037	150	150	150	150	150	150
38	SV038	350	350	350	350	350	350
39	SV039	0	0	0	0	0	0
40	SV040	0	0	0	0	0	0
41	SV041	40	40	40	40	40	40
42	SV042	35	35	35	35	35	35
43	SV043	0	0	0	0	0	0
44	SV044	0	0	0	0	0	0
45	SV045	0	0	0	0	0	0
46	SV046	0	0	0	0	0	0
47	SV047	0	0	0	0	0	0
48	SV048	0	0	0	0	0	0

#(48)AXIS<X>DATA(0)

BASE1 | BASE2 | AXIS | ZP-RTN | SERVO | MC-ERR | MACRO | $-SELECT | MENU

[SERVO PARAM] M_PARAM 5. 6/6

#		(X)	(Y)	(Z)	(W)	(A)	(C)
49	SV049	15	15	15	15	15	15
50	SV050	0	0	0	0	0	0
51	SV051	100	100	100	100	100	100
52	SV052	0	0	0	0	0	0
53	SV053	2	2	2	2	2	2
54	SV054	0	0	0	0	0	0
55	SV055	0	0	0	0	0	0
56	SV056	0	0	0	0	0	0
57	SV057	0	0	0	0	0	0
58	SV058	0	0	0	0	0	0
59	SV059	20	20	20	20	20	20
60	SV060	30	30	30	30	30	30
61	SV061	0	0	0	0	0	0
62	SV062	1	1	1	1	1	1
63	SV063	1	1	1	1	1	1
64	SV064	-1	-1	-1	-1	-1	-1

#(64)AXIS<X>DATA(-128)

BASE1 | BASE2 | AXIS | ZP-RTN | SERVO | MC-ERR | MACRO | $-SELECT | MENU

(2) Explanation of parameters

Setting class	◎	Set on the [SERVO PARAM] screen.
	○	Set on the [SERVO PARAM] screen.
Compatible from M300 to MDS-A and compatible from MDS-A to MDS-B	◎	Setting same data is okay.
	○	Setting same data is okay (only the setting increment changes).
	△	The meaning of the data is the same but the setting unit changes.
	□	Includes new parameters
	■	Same setting is okay (some details have been changed)
	×	Incompatible
	No mark	New parameters
	–	Not used

Change method	PR	Turn NC power off and on after setting.
	No mark	The power does not need to be turned off and on.

No.	Parameter abbr.	Parameter name	Setting class	Compatibility with M300 to MDS-A	Compatibility with MDS-A to MDS-B	Change method	Setting procedure	Standard setting value	Setting range
SV001	PC1	Motor side gear ratio	◎	◎	◎	PR	Set the No. of gear teeth on the motor side. Set so that PC1 and PC2 have the smallest integer ratio. (Refer to supplement explanation.)	Machine specifications	1 ~ 30 (32767) Refer to supplement explanation
SV002	PC2	Machine side gear ratio	◎	◎	◎	PR	Set the No. of gear teeth on the machine side. Set so that PC1 and PC2 have the smallest integer ratio. (Refer to supplement explanation.)	Machine specifications	1 ~ 30 (32767) Refer to supplement explanation
SV003	PGN1	Position loop gain 1	◎	○	◎		Set the position loop gain. The scale unit is 1 (0.25 in M300). Normally set to 33.0.	33	1 ~ 200 (rad/sec [1/sec])
SV004	PGN2	Position loop gain 2	○	△	◎		When performing SHG control, also set SV057: SHGC. Set to 0 when not using.	0	1 ~ 999 (rad/sec [1/sec])
SV005	VGN1	Speed loop gain 1	○	◎	◎		Set the speed loop gain. The standard value is 150, and when set higher the response will also increase as will the vibration and sound.	150	1 ~ 999
SV006	VGN2	Speed loop gain 2		◎	◎		If the noise during high-speed rotation such as rapid traverse, set the speed loop gain (smaller than VGN1) for the high-speed (1.2 times the rated speed). Use this parameter with speed gain drop start speed SV029:VCS. Set to 0 when not using. 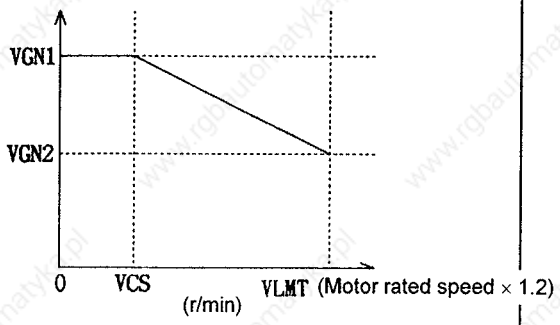	0	–1000 ~ 1000

No.	Parameter abbr.	Parameter name	Setting class	Compatibility with M300 to MDS-A	Compatibility with MDS-A to MDS-B	Change method	Setting procedure	Standard setting value	Setting range
SV007	VIL	Speed loop delay compensation	○	△	◎		Set if a limit cycle occurs in the closed loop or if overshooting occurs during positioning. This is invalid when set to 0. Related parameters: SV027-bit0, 1 Data setting handling expression: VIL(M500) = 3.28* {10000 – VIL(M300)} Example of setting handling M300 setting: 10000 → M500 setting: 0 M300 setting: 9990 → M500 setting: 33 → f (rad/s): 1.1 M300 setting: 9980 → M500 setting: 66 → f (rad/s): 2.2	0	0 ~ 32767 (0.034 rad/s)
SV008	VIA	Speed loop advance compensation	○	◎	◎		Set the speed loop integral gain.	1364	11 ~ 9999 (0.0687 rad/s)
SV009	IQA	Current loop q axis advance compensation		◎	◎		Set the current control gain. The setting data is fixed by the motor used. (Refer to supplement explanation (5) Standard parameters per motor.)	Motor	1 ~ 20480
SV010	IDA	Current loop d axis advance compensation		◎	◎				1 ~ 20480
SV011	IQG	Current loop q axis gain		◎	◎				1 ~ 2560
SV012	IDG	Current loop d axis gain		◎	◎				1 ~ 2560
SV013	ILMT1	Current limit value 1		△	◎		Set the normal current limit value (limit value for both ± directions). Set the percentage (%) for the stall rated current. Set 500 to use the amplifier to the max. torque. (Refer to supplement explanation.)	500	0 ~ 500 (%)
SV014	ILMT2	Current limit value 2		×	◎		Set the current limit value for the absolute position initialization setting (push). (Set the limit value for both ± directions.) Set the percentage (%) for the stall rated current. Set to 0 when not using.	0	0 ~ 500 (%)
SV015	FFC	Acceleration feed forward gain	○	△	◎		Set this when the overshooting amount during feed forward control or the relative error during synchronous control, etc. is large. Set to 0 when not using. The guideline for the setting is explained later.	0	0 ~ 1000
SV016	LMC1	Lost motion compensation gain 1	○	△	◎		Set this when the protrusions at the quadrant cut-off time (caused by non-sensitive area due to friction, twisting, backlash, etc.) are large. When sv041: LMC2 is 0, LMC1 is valid when both + → –, – → + commands are reversed. When sv041: LMC2 is other than 0, this will be the lost motion compensation gain when the LCM1 – → + command is reversed. (LMC2 is the + → – command reversed gain). If sv041 : LMC2 is –1, LMC1 will be the gain when the – → + command is reversed, and the compensation will be invalid when the + → – command is reversed. Definition of command direction +, – : Machine parameters (basic specifications) When 8. CCW is 0 : +, – in program match When 8. CCW is 1 : +, – in program are opposite. Refer to the setting examples (given later).		
							Type 1 (when sv027 : SSF1-bit8 is 1) The protrusions will be eliminated with this type of compensation during low-speed interpolation. The compensation gain is 0. When 100 is set, a 100% compensation will be executed. (Type used in M300 Series.)	0	0 ~ 200 (%)

No.	Parameter abbr.	Parameter name	Setting class	Compatibility with M300 to MDS-A	Compatibility with MDS-A to MDS-B	Change method	Setting procedure	Standard setting value	Setting range
SV016	LMC1	Lost motion compensation gain 1	○	△	◎		Type 2 (when sv027 : SSF1-bit9 is 1) This type is the standard in the M500 Series. This type is used when ample compensation is not possible with type 1 during high-speed high precision interpolation. Set with a % for the stall rated current. Compensation will not be performed when this is set to 0. Set a value that is double the current % displayed on the [SERVO MONITOR] screen during JOG feed (approx. F1000). 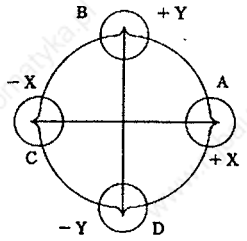 X: CW / CCW Y: CW / CCW / CW / CCW A: + → − / + → − / − → + / − → + B: + → − / − → + / + → − / − → + C: − → + / − → + / + → − / + → − D: − → + / + → − / − → + / + → −	0	0 ~ 100 (%)
SV017	SPEC	Servo system specifications	◎	×	□	PR	Set the servo system specifications with the bits. Refer to the section " Parameter details".	0	HEX
SV018	PIT	Ball screw pitch.	◎	◎	◎	PR	Set the ball screw pitch.	Machine specifications	1 ~ 32767 (mm)
SV019	RNG1	Position detector resolution	◎	◎	◎	PR	Set a value that is the No. of pulses (k pulse) per position control detector rotation times four. (Refer to the section "Parameter details".) For semi-closed : Set a value that is the No. of pulses (k pulses) per motor rotation times four. (RNG1 = RNG2) For closed : Set the No. of pulses per ball screw pitch.	Detector	1 ~ 1000 kp/rev
SV020	RNG2	Speed detector resolution	◎		◎	PR	Set the No. of pulses per motor shaft detector rotation. (Refer to the RNG1 setting.)	Detector	1 ~ 1000 kp/rev
SV021	OLT	Overload time constant		△	■		Set the time constant for overload 1 (OL1) detection. (Unit: 1sec.) (The setting unit in M300 was 0.1 sec.)	60	1 ~ 300 (sec)
SV022	OLL	Overload detection level		◎	■		Set the overload 1 (OL1) current detection level with a percentage (%) of the stall rating.	150	1 ~ 500 (%)
SV023	OD1	Excessive error width 1 (during servo ON)		△	◎		Set the excessive error width during servo ON. (The setting unit in the M300 was an interpolation unit.) Setting equation: $OD1 = OD2 = \frac{F}{60 \cdot PGN1} \cdot 0.5$ (mm) 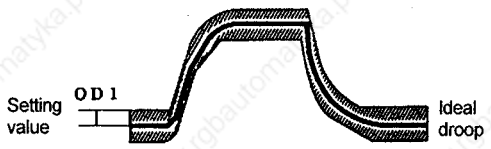	Machine specifications	1 ~ 32767 (mm)
SV024	INP	In-position width		△	◎		Set the in-position width (μm). (The setting unit in the M300 was an interpolation unit.)	50	0 ~ 32767 (μm)
SV025	MTYP	Motor type	◎	△	□	PR	Refer to the section "Parameter details".		HEX
SV026	OD2	Excessive error width 2 (during servo OFF)		△	◎		Set the excessive error width during servo OFF. (Normally the same data as OD1 is set). (The setting unit in the M300 was an interpolation unit.)	Machine specifications	0 ~ 32767 (mm)
SV027	SSF1	Servo function 1	◎	×	□		Use this to select the servo functions. Refer to the section "Parameter details".	Machine specifications	HEX
SV028					–		Not used	0	
SV029	VCS	Speed loop gain change start speed		◎	◎		When using the speed loop gain variable function, the motor speed for changing the gain is set in 0.1r/min units. Set to 0 when not using. Related parameter: sv006:VGN2	0	–32768 ~ 32767 (r/min)
SV030					–		Not used	0	

No.	Para-meter abbr.	Parameter name	Setting class	Compatibility with M300 to MDS-A	Compatibility with MDS-A to MDS-B	Change method	Setting procedure	Standard setting value	Setting range
SV031	OVS1	Overshoot compensation gain 1	○	◎	◎		Set this when overshooting occurs during deceleration stop in submicron control or closed control, etc. (Valid when 27. SSF1-bitA=1.) The overshooting will be suppressed when the setting is raised. The normal setting value is 2 to 10% (ratio to stall rated current). (Increase in 2% steps and find the value where overshooting does not occur.) Valid for both + and – directions when SV042:OVS2 is 0. Valid only in + direction when SV042:OVS2 is not 0. (OVS2 is compensation gain for – direction movement.) Refer to the supplement explanation for the definition of the + and – directions.	0	0 ~ 100 (%)
SV032	TOF	Torque offset compensation gain	○	△	◎		The unbalance torque amount for axes requiring an unbalanced torque, such as the vertical axis, is set with a percentage to stall rated current. (In the M300 Series, the setting of a minus value was the difference from 65536. In M500, the value is set as is. Example: –20.) This is used when the SSF1 lost motion compensation 1, 2 or closed loop response improvement is set. Feed in the + and – directions with the low JOG speed (approx. F200) while watching the current load (%) on the [PLC-I/F] screen servo monitor. Check the maximum value if the current load is positive and the minimum if the value is negative, and set the average value for the + and – direction values.	0	–100 ~ 100 (%)

The following parameters are new parameters for the M500 Series.

No.	Para-meter abbr.	Parameter name	Setting class	Compatibility with M300 to MDS-A	Compatibility with MDS-A to MDS-B	Change method	Setting procedure	Standard setting value	Setting range
SV033	SSF2	Servo function 2	◎		□		Refer to the section "Parameter details".	0	HEX
SV034	SSF3	Servo function 3		–	□		Refer to the section "Parameter details".	0	HEX
SV035	SSF4	Servo function 4		–	□		Refer to the section "Parameter details".	0	HEX
SV036	PTYP	Power supply type	◎		□	PR	Set only the axis connected to the power supply. (Axis connected with CN4 cable.) (Set 0 when no axis is connected.) Refer to the section "Parameter details".		
SV037	JL	Motor conversion inertia amount	○		◎		Set the inertia amount for motor conversion. This will be ignored when set to 0. (Not used currently.)	0	0 ~ 5000 (%)
SV038	FHZ	Machine resonance suppressing filter frequency	○		◎		Set the vibration frequency to be suppressed when the machine vibrates. However, this is limited to frequencies that are 100Hz and higher. Set to 0 when not using.	0	0 ~ 3000 (Hz)
SV039				–	–		Not used	0	
SV040	LMCT	Lost motion compensation non-sensitive band			◎		Set the non-sensitive band for lost motion compensation. Normally, 0 is set. This is set only when the lost motion compensation timing does not match during feed forward control.	0	0 ~ 100 (μm)
SV041	LMC2	Lost motion compensation gain 2	○		◎		Set the lost motion compensation gain for + → – (command direction CW). (This is used only when the compensation amount is to be changed according to the direction. If the setting is 0, LMC1 will be valid for both directions.) Refer to the supplement explanation.	0	–1 ~ 200 (%)
SV042	OVS2	Overshoot compensation gain 2	○		◎		Set the overshoot compensation gain for the – direction movement (command direction CW). (This is used only when the compensation amount is to be changed according to the direction. If the setting is 0, OVS1 will be valid for both directions.) This is valid when the 27. SSF1 ovst1 (bitA) is valid.	0	–1 ~ 200 (%)
SV043	OBS1	Observer 1			◎		Observer 1 Set the observer pole. Normally, approx. 628 (rad) is set. Set sv037:JL and sv044:OBS2 to activate the observer function. Set 0 when not required.	0	0 ~ 1000 (rad)
SV044	OBS2	Observer 2			◎		Observer 2 Set the observer execution gain. Normally, 100 is set. Set sv037:JL and sv043:OBS1 to activate the observer function. Set to 0 when not required.	0	0 ~ 500 (%)
SV045	TRUB	Frictional torque		–			Set the frictional torque as a percentage in respect to the stall rated current when using the collision detection function. Set to 0 when not using the collision detection function.	0	0 ~ 100 (%)
SV046				–	–		Not used	0	
SV047	EC1	Induction voltage compensation			◎		Induction voltage compensation Set the induction voltage compensation execution gain. Normally, 100 is set.	100	–32768 ~ 32767 (%)
SV048	EMGrt	Brake operation delay time		–			Set the brake operation delay time when using the drop prevention function. Set a value that is larger than the actual brake operation time. Set to 0 when not using the drop prevention function.	0	0 ~ 2000 (msec)
SV049	PGN1SP	Spindle synchronous position loop gain 1			◎		Set the position loop gain to synchronize the servo when moving the spindle position loop during synchronous tap, etc.	15	0 ~ 200 (rad/sec [1/sec])
SV050	PGN2SP	Spindle synchronous position loop gain 2			◎		Set this when using SHG control during spindle synchronous control. Set to 0 when not using.	0	0 ~ 999 (rad/sec [1/sec])
SV051	DFBT	Dual control time constant			◎		Set the compensation time constant for dual feed back control.	0	0 ~ 9999 (ms)
SV052	DFBN	Dual control non-sensitive band width			◎		Set the non-sensitive band amount for dual feed back control.	0	0 ~ 9999 (μm)
SV053	OD3	Excessive error width 3			◎		Set the excessive error width for special operations such as pushing.	0	0 ~ 32767 (mm)
SV054	ORE	Closed loop overrun detection width			◎		Set the over-run detection width during closed loop. (For alarm 43 detection.) Multiply the SV023 OD1 (excessive error width) value by 1.2, cut off the fractions, and set the value. Set to 0 when not using.	0	–1 ~ 32767 (mm)

No.	Parameter abbr.	Parameter name	Setting class	Compatibility with M300 to MDS-A	Compatibility with MDS-A to MDS-B	Change method	Setting procedure	Standard setting value	Setting range
SV055	EMGx	Emergency stop max. delay time		–			Set the max. delay time for emergency stop when using the drop prevention function. Normally, the same value as sv056:EMGt is set. Set to 0 when not using the drop prevention function.	0	0 ~ 2000 (msec)
SV056	EMGt	Emergency stop deceleration time constant		–			Set the deceleration time constant from the max. rapid traverse rate to be applied when using the drop prevention function. Normally, the same value as the CNC G0 acceleration/ deceleration time constant. Set to 0 when not using the drop prevention function.	0	0 ~ 2000 (m/sec)
SV057	SHGC	High gain control constant			◎		Set this when using SHG control. Set this with sv004: PGN2. Set to 0 when not required.	0	0 ~ 999 (rad/sec [1/sec])
SV058	SHGCSP	High gain constant for spindle synchronization			◎		Set when using SHG control for special operations (synchronous tapping, interpolation with spindle C axis, etc.). Set this with sv050:PGN2sp. Set to 0 when not required.	0	0 ~ 999 (rad/sec [1/sec])
SV059	TCNV	Torque estimation gain		–			Set the estimated torque gain to be applied when using the collision detection function. By setting sv035:SSF4/clt to 1, the setting value guideline can be displayed at MPOF on the servo monitor screen. Set to 0 when not using the collision detection function.	0	0 ~ 32767
SV060	TLMT	G0 collision detection level		–			Set the method 1 G0 modal collision detection level as a percentage in respect to the stall rated current when using the collision detection function. Set to 0 when not using the collision detection function.	0	0 ~ 500 (%)
SV061	DA1NO	D/A output channel 1 data No.			◎		Set the output data No. for the channel 1 of the D/A output function. If -1 is set, D/A output of that axis will not be carried out.	0	
SV062	DA2NO	D/A output channel 2 data No.			◎		Set the output data No. for the channel 2 of the D/A output function. If -1 is set, D/A output of that axis will not be carried out.	0	
SV063	DA1MPY	D/A output channel 1 magnification			◎		Set the output magnification for channel 1 of the D/A output function. The output magnification is the (setting value)/256. If 0 is set, it will be interpreted that 256 is set. (Output magnification: 1-fold)	0	
SV064	DA2MPY	D/A output channel 2 magnification			◎		Set the output magnification for channel 2 of the D/A output function. The output magnification is the (setting value)/256. If 0 is set, it will be interpreted that 256 is set. (Output magnification: 1-fold)	0	

(3) Parameter details

sv015 FFC Acceleration feed forward gain

Refer to the following table, calculate FFC, and set the value. Then, increment the value by +10% at a time until the effect is seen. The upper limit is two times the initial value.

FFC = A* (1+JL/JM) Where, JL is the motor axis conversion load inertia.
JM is the motor rotor inertia.
A is set from the following table according to the motor model name.

Motor model name	A
HA23	55
HA33	65
HA40	100
HA43	140
HA80	110
HA83	145
HA100	235
HA103	250
HA200	320
HA300	320
HA700	310
HA900	300

Motor model name	A
HA50NL	30
HA53NL	25
HA100NL	35
HA103NL	30
HA150NL	55
HA153NL	50
HA200NL	85
HA203NL	70
HA300NL	80
HA303NL	70
HA500NL	175
HA503NL	155

Motor model name	A
HA-LH11K2	100
HA-LH15K2	160

Note) All bits not used including empty bits are all set to 0 in the following bit explanation.

sv017 SPEC

Servo specifications

F	E	D	C	B	A	9	8	7	6	5	4	3	2	1	0
						mpt3	mp	abs		vdir	fdir			dfbx	

bit	Name	Meaning when set to 0	Meaning when set to 1
0			
1	dfbx	Dual feedback control invalid	Dual feedback control valid
2			
3			
4	fdir	Position feedback positive polarity	Position feedback negative polarity
5	vdir	Motor end detector installation direction AC	Motor end detector installation direction BD
6			
7	abs	Relative position detection	Absolute position detection
8	mp	MP scale 360P (2mm pitch)	MP scale 720P (1mm pitch)
9	mpt3	MP scale absolute position detection type 1/2 selection	MP scale absolute position detection type 3 election
A			
B			
C			
D			
E			
F			

bit5 [vdir] Polarity position detector installation direction B, D
If installation direction B or D are used for the small capacity motor (HA23N/33N) set this bit to 1.
Always set this bit to 0 for other motors.

Use the standard A detection to prevent incorrect settings.
0 : Polarity position detector installation direction A, C
1 : Polarity position detector installation direction B, D

Detector connector orientation symbols
(A direction is used as a standard.)

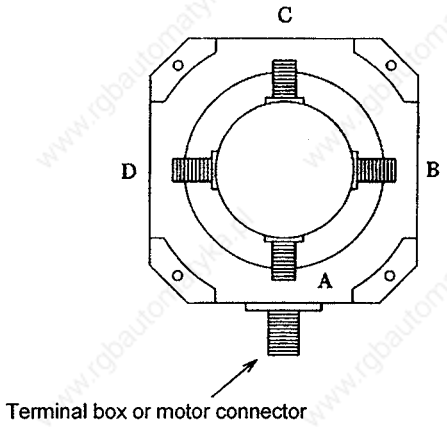

sv019 [RNG1] Position detector resolution

sv020 [RNG2] Speed detector resolution

Motor capacity	p/rev	Position/speed detector	RNG1	RNG2
50/100W	2500	HA053/HA13 Motor built-in detector	10	10
200W or more	25000	OHE25K-6/OSE104 OHE25K-85/OSE104S OHA25K-4/OSA104 OHA25K-85/OSA104S	100	100
200W or more	25000 (100,000)	OHE25K-ET/OSE104ET OHA25K-ET/OSA104ET	100	X
200W or more	(1,000,000)	OSE105/OSE105S	1000	1000
		OSA105/OSA105S		
Linear scale			PIT	X
Induct-syn			Scale resolution	

X : Set the parameter (10 or 100, 1000) corresponding to the relevant motor end detector model name.

sv025 MTYP Motor and detector type

F E D C B A 9 8	7 6 5 4	3 2 1 0
PEN	ENT	MTYP

PEN Position detector type
(Set the model name of the detector being used from the following table)

ENT Speed detector type
(Set the model name of the detector being used from the following table)

Class	Detection method	Detector model name	PEN	ENT
Motor end detector	Relative value	OHE25K-6, OHE25K-85/OSE104, OSE104S	0	0
	Absolute value	OHA25K-4, OHA25K-85/OSA104, OSA104S	1	1
	High-speed serial	OSA105/OSE105	2	2
	Relative value	HA053/13 Motor built-in encoder	3	3
Ball screw end detector	Relative value	OHE25K-ET/OSE104ET	4	X
	Absolute value	OHA25K-ET/OSA104ET	5	X
	High-speed serial	OSA105ET/OSE105ET	6	X
			7	X
Machine end detector	A, B, Z-phase	Optical scale, magnetic scale, MP scale (induct-syn)	8	X
	Serial absolute value	Mitsutoyo absolute value linear scale AT41, Soshin Electric FME type, FLE type	9	X
	High-speed serial	Mitsutoyo absolute value linear scale AT342	A	X
			B	X

X : Set the "ENT" value (0 to 3) in the table corresponding to the relevant motor end detector model name.

* : When using the 100,000 pulse serial pulse encoder the same parameter settings as the conventional type (OHA-25K/OHE-25K) are used.

MTYP Motor type (Select the motor model name from the following table.)

Motor series	2000rpm Standard	2000rpm Flat	2000rpm Low inertia	3000rpm Low inertia	3000prm Ultra-low inertia	3000rpm Special		3000rpm General-purpose	3000rpm Standard
No.	0x	1x	2x	3x	4x	5x	6x	7x	8x
x0	HA40N	HA50U	HA50NL	HA53NL	HA43LN		HA-N43	HA-FE43	HA43N
x1	HA80N	HA100U	HA100NL	HA103NL	HA83LN			HA-FE63	HA83N
x2	HA100N	HA200U	HA200NL	HA203NL	HA103LN				HA103N
x3	HA200N	HA300U	HA300NL	HA303NL	HA203LN				HA203N
x4	HA300N	HA500U	HA500NL	HA503NL	HA303LN				HA303N
x5	HA700N								HA703N
x6	HA900N								
x7			HA-LH11K2						
x8			HA-LH15K2						
x9									
xA		HA150U	HA150NL	HA153NL	HA93LN				
xB									
xC								HA-FE053	HA053
xD								HA-FE13	HA13
xE							HA-N23	HA-FE23	HA23N
xF		HA30U					HA-N33	HA-FE33	HA33N

Note : Types indicates as HA-FE in the table include HA-FH.

sv027 SSF1

Special servo function selection 1

F	E	D	C	B	A	9	8	7	6	5	4	3	2	1	0
aflt	zrn2			ovs2	ovs1	lmc2	lmc1			vfct2	vfct1		upc	vcnt2	vcnt1

bit	Name	Meaning when set to 0	Meaning when set to 1	Usage	
				MDS-A	MDS-B
0	vcnt1	00: Delay compensation changeover invalid 01: Delay compensation changeover type 1	10: Delay compensation changeover type 2 11: Reserved	○	○
1	vcnt2				
2	upc	Starting torque compensation invalid	Starting torque compensation valid	×	○
3				–	–
4	vfct1	00: Jitter compensation invalid 01: Jitter compensation 1 pulse	10: Jitter compensation 2 pulse 11: Jitter compensation 3 pulse	○	○
5	vfct2				
6				–	–
7				–	–
8	lmc1	00: Lost motion compensation invalid 01: Lost motion compensation type 1	10: Lost motion compensation type 2 11: Reserved	○	○
9	lmc2				
A	ovs1	00: Overshoot compensation invalid 01: Overshoot compensation type 1	01: Overshoot compensation type 2 11: Reserved	○	○
B	ovs2				
C				–	–
D				–	–
E	zm2	Reference point return type 1	Reference point return type 2	○	○
F	aflt	Adaptive filter invalid	Adaptive filter valid	○	○

Note) Bit E is set to 1 when the power is turned ON. Do not change this bit.

bit0 [vcnt1] bit1 [vcnt2] Speed loop delay compensation type
Overshooting and limit cycle, etc., will be prevented during the closed loop.
Use this in combination with sv007: VIL.
When used, type 1 is the standard.

bit4 [vfct1] bit5 [vfct2] Speed feed back compensation (jitter compensation)
The jittering during light loads is compensated.

bit8 [lmct1] bit9 [lmct2] Lost motion compensation type
The compensation gain is set with sv016:LMC1 and sv041:LMC2.
When used, type 2 is the standard.

bitA [ovst1] Overshoot compensation
The compensation gain is set with sv031:OVS1 and sv042:OVS2.

bitF [aflt] Adaptive filter
The resonance frequency is detected when machine vibration occurs, and the filter is automatically set to remove the vibration. This is effective for resonance exceeding 100Hz.

sv033 SSF2

Special servo function selection 2

F	E	D	C	B	A	9	8	7	6	5	4	3	2	1	0
															zck

bit	Name	Meaning when set to 0	Meaning when set to 1
0	zck	Z phase check valid (part of alarm 42)	Z phase check invalid
1			
2			
3			
4			
5			
6			
7			
8			
9			
A			
B			
C			
D			
E			
F			

sv036 PTYP

F	E	D	C	B	A	9	8	7	6	5	4	3	2	1	0
												ptyp			

ptyp Power supply type (Set model name from following table)

Power supply type	ptyp
Not connected	00
CV-37	04
CV-55	06
CV-75	08
CV-110	11
CV-150	15
CV-185	19
CV-220	22
CV-260	26
CV-300	30
CV-370	37

Set only the axis connected to the power supply.
(Set 0 if no axis is connected.)
If the 2-axis integrated amplifier is connected to the power supply, set both the L axis and M axis to the same parameter.

* The above settings are the standard settings for CV. When using special settings, CR or CSP, refer to Chapter 2 Power supply section and Chapter 4 CPS Large capacity spindle drive section.

(4) Supplement explanation

(a) Lost motion and overshooting compensation + and – directions
Confirm the [BASE SPEC. PARAM] M-PARAM 8.ccw.

When parameter ccw = 0 : The + and – directions in the program match the + and – compensation directions.

When parameter ccw = 1 : The + and – directions in the program are opposite to the + and – compensation directions.

(Example of lost motion compensation) When applying lost motion compensation on the X axis direction

JOG feed was executed at F500 to F1000, and when the current value on the [NC MONITOR] screen was confirmed the current value was 20%. However, there is a difference in the protrusion amount so the A point compensation amount is to be set to 40% and the C point compensation amount to 50%.
If parameter ccw is 0, set 50 in LMC1 and 40 in LMC2.
If parameter ccw is 1, set 40 in LMC1 and 50 in LMC2.
To set the A point compensation amount to 40% and the C point compensation amount to 0% when ccw is 0, set –1 in LMC1 and 40 in LMC2.
To set the A point compensation amount to 0% and the C point compensation amount to 40%, set 40 in LMC1 and –1 in LMC2.

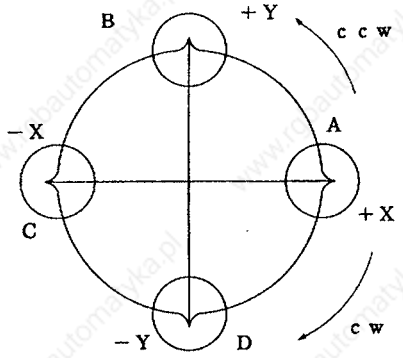

(b) Limits regarding PC1 and PC2
The setting range of sv001:PC1 and sv002:PC2 is basically 1 to 30. However, if the following conditions are satisfied, a setting of 30 or more is possible.
Note that even when in the range of 1 to 30, the following conditions must be satisfied.

For semi-closed loop
PC1' < 32767/PIT'/IUNIT
PC2' < 32767/RNG1'

For closed loop
PC1' < 32767/RNG1C/30
PC2' < 32767/RNG2C/PGN1

Meaning of symbols

PC1'	Valid obtained by dividing PC1 by the max. common divisor of PC2
PC2'	Valid obtained by dividing PC2 by the max. common divisor of PC1
PIT'	Valid obtained by dividing PIT by the max. common divisor of RNG1
RNG1'	Valid obtained by dividing RNG1 by the max. common divisor of PIT
RNG1C	Valid obtained by dividing RNG1 by the max. common divisor of RNG2
RNG2C	Valid obtained by dividing RNG2 by the max. common divisor of RNG1
IUNIT	CNC interpolation unit

CNC interpolation unit	IUNIT
0.500μm	2
0.050μm	20
0.005μm	200

(c) Current limits

Motor	Stall rated current A	Max. current A	Max. torque N·m	%
HA40N	3.6	17	14.2	472
HA80N	6.6	28	25.5	424
HA100N	14	42	42	300
HA200N	22	57	60	260
HA300N	37	85	87	230
HA700N	49	113	120	231
HA900N	56	141	153	252
HA053	1.4	3.9	0.69	279
HA13	1.4	3.9	1.37	279
HA23N	3	8.1	2.75	270
HA33N	3	8.1	5.6	270
HA43N	5	17	10.2	340
HA83N	8.8	28	19.2	318
HA103N	19.6	57	40	291
HA203N	34.5	85	56	246
HA303N	55	113	80	205
HA703N	68	141	105	207
HA50NL	4	17	13.0	425
HA100NL	8	28	20.9	350
HA150NL	11.5	42	31	365
HA200NL	18.2	42	32	231
HA300NL	25	57	52	228
HA500NL	44	85	72	193
HA53NL	5.8	28	14.1	482
HA103NL	11.0	42	22.5	381
HA153NL	16.2	42	22.8	259
HA203NL	21	57	37	271
HA303NL	32	85	60	265
HA503NL	54	113	78	209
HA-LH11K2	84	204	158	242
HA-LH15K2	100	260	215	260

When sv013 ILMT1 is set to 500(%), the limit will be applied with the maximum current (torque) shown above.
To apply the limit below the maximum current (torque) set the parameter with the percentage (%) to the stall rating.

(5) Standard parameters per motor

1. 2000rpm motor

Parameter		HA40N	HA80N	HA100N	HA200N	HA300N	HA700N	HA900N			
	Driver	05	10	20	35	45	70	90			
sv001	PC1										
2	PC2										
3	PGN1	33	33	33	33	33	25	25			
4	PGN2	0	0	0	0	0	0	0			
5	VGN1	150	150	150	150	150	250	250			
6	VGN2	0	0	0	0	0	0	0			
7	VIL	0	0	0	0	0	0	0			
8	VIA	1364	1364	1364	1364	1364	1364	1364			
9	IQA	2048	2048	1024	1024	1024	1024	1024			
10	IDA	2048	2048	2048	2048	2048	2048	2048			
11	IQG	512	512	256	256	256	200	200			
12	IDG	512	512	512	512	512	256	256			
13	ILMT1	500	500	500	500	500	500	500			
14	ILMT2	0	0	0	0	0	0	0			
15	FFC	0	0	0	0	0	0	0			
16	LMC1	0	0	0	0	0	0	0			
17	SPEC										
18	PIT										
19	RNG1										
20	RNG2										
21	OLT	60	60	60	60	60	60	60			
22	OLL	150	150	150	150	150	150	150			
23	OD1										
24	INP	50	50	50	50	50	50	50			
25	MTYP	XX00	XX01	XX02	XX03	XX04	XX05	XX06			
26	OD2										
27	SSF1	4000	4000	4000	4000	4000	4000	4000			
28		0	0	0	0	0	0	0			
29	VCS	0	0	0	0	0	0	0			
30		0	0	0	0	0	0	0			
31	OVS1	0	0	0	0	0	0	0			
32	TOF	0	0	0	0	0	0	0			
33	SSF2	0	0	0	0	0	0	0			
34	SSF3	0	0	0	0	0	0	0			
35	SSF4	0	0	0	0	0	0	0			
36	PTYP										
37	JL	0	0	0	0	0	0	0			
38	FHZ	0	0	0	0	0	0	0			
39		0	0	0	0	0	0	0			
40		0	0	0	0	0	0	0			
41	LMC2	0	0	0	0	0	0	0			
42	OVS2	0	0	0	0	0	0	0			
43		0	0	0	0	0	0	0			
44		0	0	0	0	0	0	0			
45		0	0	0	0	0	0	0			
46		0	0	0	0	0	0	0			
47	EC1	100	100	100	100	100	100	100			
48		0	0	0	0	0	0	0			
49	PGN1SP	15	15	15	15	15	15	15			
50	PGN2SP	0	0	0	0	0	0	0			
51	DFBT	0	0	0	0	0	0	0			
52	DFBN	0	0	0	0	0	0	0			
53	OD3	0	0	0	0	0	0	0			
54	ORE	0	0	0	0	0	0	0			
55		0	0	0	0	0	0	0			
56		0	0	0	0	0	0	0			
57	SHGC	0	0	0	0	0	0	0			
58	SHGCSP	0	0	0	0	0	0	0			
59		0	0	0	0	0	0	0			
60		0	0	0	0	0	0	0			
61	DA1NO	0	0	0	0	0	0	0			
62	DA2NO	0	0	0	0	0	0	0			
63	DA1MPY	0	0	0	0	0	0	0			
64	DA2MPY	0	0	0	0	0	0	0			

2. 3000rpm motor

Parameter		HA053	HA13	HA23N	HA33N	HA43N	HA83N	HA103N	HA203N	HA303N	HA703N
	Driver	01	01	03	03	05	10	35	45	70	90
sv001	PC1										
2	PC2										
3	PGN1	33	33	33	33	33	33	33	33	33	33
4	PGN2	0	0	0	0	0	0	0	0	0	0
5	VGN1	70	70	70	70	150	150	150	150	150	150
6	VGN2	0	0	0	0	0	0	0	0	0	0
7	VIL	0	0	0	0	0	0	0	0	0	0
8	VIA	1364	1364	1364	1364	1364	1364	1364	1364	1364	1364
9	IQA	2048	2048	2048	2048	2048	2048	2048	2048	2048	2048
10	IDA	2048	2048	2048	2048	2048	2048	2048	2048	2048	2048
11	IQG	256	256	256	256	256	256	256	256	256	256
12	IDG	256	256	256	256	512	512	512	512	512	512
13	ILMT1	500	500	500	500	500	500	500	500	500	500
14	ILMT2	0	0	0	0	0	0	0	0	0	0
15	FFC	0	0	0	0	0	0	0	0	0	0
16	LMC1	0	0	0	0	0	0	0	0	0	0
17	SPEC										
18	PIT										
19	RNG1										
20	RNG2										
21	OLT	60	60	60	60	60	60	60	60	60	60
22	OLL	150	150	150	150	150	150	150	150	150	150
23	OD1										
24	INP	50	50	50	50	50	50	50	50	50	50
25	MTYP	XX8C	XX8D	XX6E	XX6F	XX80	XX81	XX82	XX83	XX84	XX85
26	OD2										
27	SSF1	4000	4000	4000	4000	4000	4000	4000	4000	4000	4000
28		0	0	0	0	0	0	0	0	0	0
29	VCS	0	0	0	0	0	0	0	0	0	0
30		0	0	0	0	0	0	0	0	0	0
31	OVS1	0	0	0	0	0	0	0	0	0	0
32	TOF	0	0	0	0	0	0	0	0	0	0
33	SSF2	0	0	0	0	0	0	0	0	0	0
34	SSF3	0	0	0	0	0	0	0	0	0	0
35	SSF4	0	0	0	0	0	0	0	0	0	0
36	PTYP										
37	JL	0	0	0	0	0	0	0	0	0	0
38	FHZ	0	0	0	0	0	0	0	0	0	0
39		0	0	0	0	0	0	0	0	0	0
40		0	0	0	0	0	0	0	0	0	0
41	LMC2	0	0	0	0	0	0	0	0	0	0
42	OVS2	0	0	0	0	0	0	0	0	0	0
43		0	0	0	0	0	0	0	0	0	0
44		0	0	0	0	0	0	0	0	0	0
45		0	0	0	0	0	0	0	0	0	0
46		0	0	0	0	0	0	0	0	0	0
47	EC1	100	100	100	100	100	100	100	100	100	100
48		0	0	0	0	0	0	0	0	0	0
49	PGN1SP	15	15	15	15	15	15	15	15	15	15
50	PGN2SP	0	0	0	0	0	0	0	0	0	0
51	DFBT	0	0	0	0	0	0	0	0	0	0
52	DFBN	0	0	0	0	0	0	0	0	0	0
53	OD3	0	0	0	0	0	0	0	0	0	0
54	ORE	0	0	0	0	0	0	0	0	0	0
55		0	0	0	0	0	0	0	0	0	0
56		0	0	0	0	0	0	0	0	0	0
57	SHGC	0	0	0	0	0	0	0	0	0	0
58	SHGCSP	0	0	0	0	0	0	0	0	0	0
59		0	0	0	0	0	0	0	0	0	0
60		0	0	0	0	0	0	0	0	0	0
61	DA1NO	0	0	0	0	0	0	0	0	0	0
62	DA2NO	0	0	0	0	0	0	0	0	0	0
63	DA1MPY	0	0	0	0	0	0	0	0	0	0
64	DA2MPY	0	0	0	0	0	0	0	0	0	0

(6) Parameters per servo system

Parameter	Relative position detection			Absolute position detection		
	Semi-closed loop	Closed loop		Semi-closed loop	Closed loop	
		Ball screw end detection	Scale detection		Ball screw end detection	Scale detection
sv017 SPEC (HEX)	• bit5-HA23/33N Detector connector position	• bit1 (DUAL FB) • bit4 (polarity) • bit5-HA23/33N Detector connector position	• bit1 (DUAL FB) • bit4 (polarity) • bit5-HA23/33N Detector connector position • bit8 Z-phase type	• bit7=1	• bit1 (DUAL FB) • bit4 (polarity) • bit5-HA23/33N Detector connector position • bit7=1	• bit1 (DUAL FB) • bit4 (polarity) • bit5-HA23/33N • bit7=1 • bit8 Z-phase type • bit9-Detector type
sv019 RNG1	10 (HA053/13) 100 (OHE25K/OSE104) 1000 (OSE105)	100 (OHE25K/OSE104) 1000 (OSE105)	Ball screw pitch / Scale resolution	100 (OHA25K/OSA104) 1000 (OSA105)	100 (OHA25) (OSA104) OR 1000 (OSA105)	Ball screw pitch / Scale resolution
sv020 RNG2	Same setting as sv019	10 (HA053/13) 100 (OHE25K/OSE104) 1000 (OSE105□)	10 (HA053/13) 100 (OHE25K/OSE104) 1000 (OSE105□)	Same setting as sv019	10 (HA053/13) 100 (OHE25K/OSE104) 1000 (OSE105)	10 (HA053/13) 100 (OHE25K/OSE104) 1000 (OSE105)
sv025 MTYP	33XX (HA053/13)	43XX/63XX 43XX (HA053/13)	83XX (HE053/13)	11XX (OHA25K/OSA104)	53XX/63XX (HA053/13)	93XX/A3XX (HA053/13)
	00XX (OHE25K/OSE104)	40XX/60XX (OSE25K/OSE104)	80XX (OHE25K/OSE104)		50XX/60XX (OHE25K/OSE104)	90XX/A0XX (OHE25K/OSE104)
	22XX (OSE105)	43XX/62XX (OSE105)	82XX (OSE105)	22XX (OSA105)	52XX/62XX (OSE105)	92XX/A2XX (OSE105)

* The 1μm and 0.1μm changeover will depend on the NC side parameters. (0.1μm cannot be used when using HA053/13.)

5.6 Alarms and warnings

⚠ CAUTION
When an alarm occurs, remove the cause of the alarm, confirm that an operation signal is not being input, and secure the safety. Then reset the alarm to resume operation.

When an alarm occurs in the servo amplifier, the base will be shut off and the motor will coast to a stop. Turn the power OFF with an external sequence. (Refer to 5.8 Main circuit connection.)
When resetting the alarm, remove the cause, and then turn the power ON.

IMPORTANT

When an overcurrent or overload related alarm occurs, if the power is repeated turned OFF and ON to continue operation without removing the cause of the alarm, the temperature will rise and lead to element damage.

The amplifier state is displayed on the servo amplifier display with a code and the data is transferred to the NC. The alarm is also displayed on the NC screen when an alarm occurs. (The alarm No. on the NC screen may differ from the servo amplifier alarm No. Refer to the NC Instruction Manual for details.)
Refer to "MDS Series Maintenance Manual" BNP-B2046 for details on troubleshooting.

#	Status	Description
AA	INITIALIZE	Waitng for NC power start up (NC power ON → OFF).
Ab	INITIALIZE	Waiting for NC power start up
AC	INITIALIZE	During parameter transfer request
Ad	INITIALIZE	Waiting for parameter conversion request
AE	INITIALIZE	Waiting for main servo IT start
b*	READY OFF	Ready OFF
C*	READY ON	Servo OFF
d*	SERVO ON	Servo ON
9*	WARNING	Warning
E*	WARNING	Warning (However, E6, E7 are status displays other than alarms or warnings.)
**	ALARM	Alarm

* : Axis number * : Warning number (See next page.) ** : Alarm number (See next page.)

Example of the display (when relevant amplifier is set to No. 1 axis)

(1) During servo ON

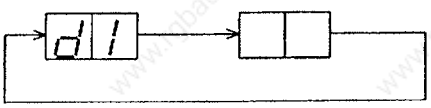

(2) During alarm (display flickers)

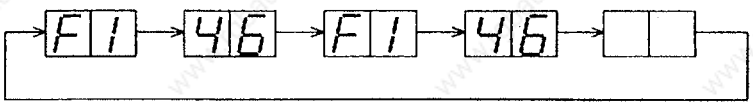

<Servo alarms>

Display	Abbr.	Name	Meaning	Release	Class	Alarm/warning check period			
						f1	f2	f3	f4
11	ASE	Axis selection error	When using the 2-axis integral drive unit, the axis setting rotary switch setting is illegal.	AR	C	○	–	–	–
12	ME	Memory error	The memory IC (SRAM or FLROM) check sum was illegal.	AR	C	○	–	–	–
13	SWE	Software processing error	The software data processing was not completed within the normal time. Includes peripheral G/A errors.	PR	C	–	○	○	○
16	RD1	Pole position detection error	The differential input of the U, V, or W phase of the pole position detection signal of the OHE type detector were both "H" or "L".	PR	A	–	○	○	–
17	ADE	AD converter error	The AD converter for current detection did not function correctly during initialization.	PR	A	–	○	–	–
18	WAT	Initial communication error	The absolute position or magnetic pole position data was not correctly communicated in the OHA type detector or serial pulse encoder.	PR	A	–	○	–	–
1A	STE1	Serial detector communication error (SUB)	The initial communication with the serial pulse encoder installed on the ball screw end was not possible.	PR	A	–	○	–	–
1B	Scpu	CPU error (SUB)	An error was detected in the data stored in the EEROM of the serial pulse encoder installed on the ball screw end. (Alarm output by the detector.)	PR	A	–	○	○	○
1C	Sled	LED error (SUB)	Deterioration of the LEDs in the serial pulse encoder installed on the ball screw end was detected. (Alarm output by the detector.)	PR	A	–	○	○	○
1D	Sdat	Data error (SUB)	An error was detected in the per rotation position data of the serial pulse encoder installed on the ball screw end. (Alarm output by the detector.)	PR	A	–	○	○	○
1E	SOHE	Serial detector thermal error (SUB)	The thermal protector built in the detector operated in the serial pulse encoder installed on the ball screw end. (Alarm output by the detector.)	PR	A	–	○	○	○
1F	Stre	Communication error (SUB)	Communication with the detector in the serial pulse encoder installed on the ball screw end was cut off.	PR	A	–	○	○	–
20	NS1	No signal detected 1	The differential input of the A, B or Z-phase signal from the motor end installation detector were both "H" or "L". (Software detection in B Series.)	PR	A	–	○	○	–
21	NS2	No signal detected 2	The differential input of the A, B or Z-phase signal from the machine end installation detector were both "H" or "L". (Software detection in B Series.)	PR	A	–	○	○	–
25	ABSE	Absolute position lost	The absolute position data in the absolute value detector was lost.	AR	A	–	○	–	–
26	NAE	Not used axis error	When using the 2-axis integrated drive unit, the axis setting rotary switch was set to "F", and a power module error occurred in the axis not being controlled.	PR	C	–	○	○	○
27	SCCPU	Absolute position detection scale CPU error	An error was detected in the CPU of the absolute position linear scale. (Alarm output by the detector.)	PR	A	–	○	○	○
28	SOSP	Absolute position overspeed	The scale moved at more than 45mm/sec during initialization with the absolute value linear scale. (Alarm output by the linear scale.)	PR	A	–	○	–	–
29	SABS	Absolute position detection circuit error	A hardware error was detected in the absolute position detection circuit of the absolute position linear scale. (Alarm output by the linear scale.)	PR	A	–	○	○	○
2A	SINC	Relative position detection circuit error	A hardware error was detected in the relative position detection circuit of the absolute position linear scale. (Alarm output by the linear scale.)	PR	A	–	○	○	○
2B	SCPU	CPU error	A CPU error was detected in the serial pulse encoder installed on the motor end. (Alarm output by the detector.)	PR	A	–	○	○	○
2C	SLED	LED error	Deterioration of the LEDs in the serial pulse encoder installed on the motor end was detected. (Alarm output by the detector.)	PR	A	–	○	○	○
2D	SDAT	Data error	An error was detected in the per rotation position data of the serial pulse encoder installed on the motor end. (Alarm output by the detector.)	PR	A	–	○	○	○
2F	STRE	Communication error	Communication with the OHA type detector or serial pulse encoder installed on the motor end and the detector was cut off.	PR	A	–	○	○	○
31	OS	Overspeed	The motor speed reached 1.2 times the rated speed.	PR	A	–	○	○	–
32	PMOC	Power module overcurrent	An overcurrent was detected in the IPM used in the servo drive's main circuit.	PR	A	–	○	○	○
34	DP	CRC error	A CRC error occurred in the communication data from the NC.	PR	C	–	○	○	○
35	DE	Data error	The movement command data from the NC is abnormally large.	PR	A	–	○	○	–
36	TE	Transmission error	The cycle data transmission from the NC was terminated.	PR	C	–	○	○	–

Dis-play	Abbr.	Name	Meaning	Re-lease	Class	Alarm/warning check period			
						f1	f2	f3	f4
37	PE	Parameter error	An illegal servo parameter was sent from the NC during initialization of the servo drive.	PR	A	–	○	–	○
38	TP1	Protocol error 1	There was an error in the communication protocol with the NC. (Frame error)	PR	C	–	○	○	○
39	TP2	Protocol error 2	There was an error in the communication protocol with the NC. (Information error)	PR	A	–	○	○	○
3A	OC	Overcurrent	An excessive current flowed to the motor.	PR	A	–	○	○	○
3B	PMOH	Power module overheat	Overheating of the IPM used in the servo driver's main circuit was detected.	PR	A	–	○	○	○
42	FE1	Feedback error 1	① A skip of the detector feedback signal pulse occurred in the OHE type or OHA type detector used in the semi-closed loop system and ball screw end closed loop system. ② A skip of the detector feedback pulse in the low-speed serial type absolute position linear scale.	PR	A	–	○	○	–
43	FE2	Feedback error 2	A deviation occurred in the feedback amount from the motor end detector and machine end detector in the closed loop system.	PR	A	–	○	○	–
46	OHM	Motor overheat	The motor or detector thermal protector operated.	NR	A	–	○	○	–
50	OL1	Overload 1	The motor current operated in the range set with the overload detection level (parameter OLL) and overload time constant (parameter OLT).	NR	A	–	○	○	○
51	OL2	Overload 2	A current command with a maximum output current exceeding 95% continued for 1 second or more.	NR	A	–	–	○	–
52	OD1	Excessive error 1	The actual position to the command exceeded the excessive error width 1 (parameter OD1) when the servo was turned ON.	NR	A	–	–	○	–
53	OD2	Excessive error 2	The actual position to the command exceeded the excessive error width 2 (parameter OD2) when the servo was turned OFF.	NR	A	–	○	–	–
54	OD3	Excessive error 3	The motor current did not flow when the excessive error 1 alarm was detected. (Added with the B Series.)	NR	A	–	–	○	–
58	CLE0	Collision detection 0	A collision detection type 1 error was detected during the G0 modal (rapid traverse).	NR	A	–	–	○	–
59	CLE1	Collision detection 1	A collision detection type 1 error was detected during the G1 modal (cutting feed).	NR	A	–	–	○	–
5A	CLT2	Collision detection 2	A collision detection type 2 error was detected.	NR	A	–	–	○	–
60 ~ 7F			An error occurred in the power supply unit. (Refer to the power supply section for details)						
82	NSP	Power supply no signal	Breakage or incorrect connection of the cable connected to the power supply was detected. (A Series only)	PR	C	–	○	○	○
88	WD	Watch dog	The servo amplifier software process was not executed within the designated time.	AR	C	○	○	○	○

<Servo warning>

90	WST	Low-speed serial initial communication error	Initial communication with the low-speed serial type absolute position linear scale was not possible.	PR	A	–	○	–	–
91	WAS	Detector communication error	The absolute position serial data was not correctly communicated from the OHA type detector and low-speed serial type absolute position linear scale.	–	A	–	○	○	–
92	WAF	Detector serial format error	The format of the serial data from the OHA type detector and low-speed serial type absolute position linear scale was incorrect.	–	A	–	○	○	–
93	WAM	Absolute position fluctuation	The absolute value counter cannot be set as the absolute position data fluctuated when the NC power was turned on.	PR	A	–	○ *1	○	–
96	MPE	MP scale feedback error	In the MP scale absolute detection system, an excessive deviation in the motor end installation detector and MP scale feedback amount was detected.	–	A	–	○	○	○
97	MPO	MP scale offset error	In the MP scale absolute position detection system, an error was detected in the offset data read when the NC power was turned ON.	PR	A	–	○	–	–
9E	WAN	High-speed serial multi-rotation counter error	An error was detected in the multi-rotation counter in the serial pulse encoder installed on the motor end or ball screw end.	–	A	–	○	○	○
9F	WAB	Battery voltage drop	The voltage of the battery supplied to the absolute value detector dropped.	–	C	–	○	○	○

Dis-play	Abbr.	Name	Meaning	Re-lease	Class	Alarm/warning check period			
						f1	f2	f3	f4
E1	WOL	Overload warning	An 80% level of the overload 1 alarm was detected. (If operation is continued, the overload 1 alarm may occur.)	–	A	–	○	○	○
E3	WAC	Absolute position counter warning	The absolute position counter value is illegal. The absolute position must be initialized.	–	A	–	○	○	–
E4	WPE	Parameter error warning	A parameter exceeding the setting range was set. The illegal parameter will be ignored and the previously set value will be held.	–	A	–	○	○	–

<Status displays other than alarms and warnings>

E6	AXE	Removing control axis	The axis removal command is input from the NC.	–	A	–	○	○	○
E7	NCE	NC emergency stop	The emergency stop command is input from the NC.	–	C	–	○	○	○
E8 ~ EB			A warning was generated with the power supply unit. (Refer to the power supply unit item for details.)						

[Release]

AR : The alarm is released by turning the servo driver power off and on.
PR : The alarm is released by turning the NC power off and on.
NR : The alarm is released with the NC reset key. (However, overload alarm "50" cannot be released until the load is lowered passed the reset level (30% of the current value on the MONITOR screen).
– : Automatically restored when the warning state is eliminated.

[Class]

C : Detects both axes even during the 2-axis integrated amplifier.
A : Detects each axis independently.

[Alarm/warning check period]

f1 : When servo driver power is turned on.
f2 : When NC power is turned on (emergency stop on)
f3 : Constantly during operation (servo ON)
f4 : During axis removal (ready ON, servo OFF)
(Note: *1; Warning "93" may occur after axis removal while installing the axis again.)

5.7 Explanation of connector and terminal block

		Name	Application	Remarks
Connector		CN1A	For connection with NC and high-order axis	
		CN1B	For connection with battery unit and low-order axis	
		CN9	For maintenance (not used normally)	
		CN4	For connection with power supply	
		CN2	For connection with motor end detector	
		CN3	For connection with machine end detector	
		CN20	External brake output contact point	For combination of V1-110/150 dynamic brake contact output
Terminal block	TE2	L+	Converter voltage input (+)	
		L–	Converter voltage input (–)	
	TE3	L11	AC200V single-phase input	
		L21		
	TE1	U	U-phase output for motor drive	
		V	V-phase output for motor drive	
		W	W-phase output for motor drive	
		⏚	Grounding	

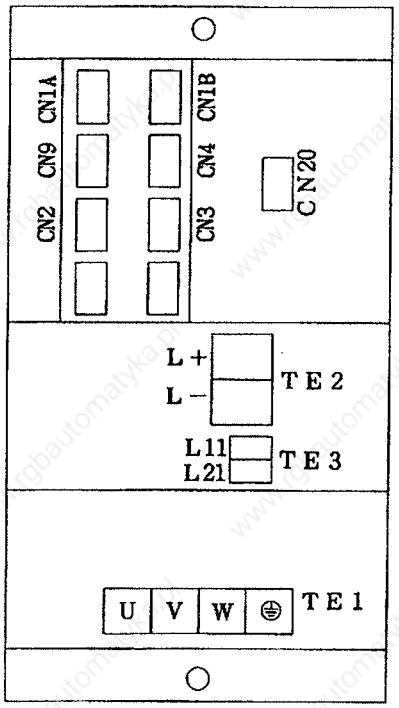

MDS-A/B-V1

5.8 Main circuit and brake connection

⚠ WARNING
Always ground the servo drive unit and servomotor with Class 3 or higher grounding.

⚠ CAUTION
1. Correctly connect the power phases (U, V, W) of the servo drive unit and servomotor. Failure to do so could cause the servomotor to malfunction. 2. Do not apply a voltage other than that specified to each terminal. Failure to observe this could lead to ruptures or trouble.

5.8.1 Main circuit

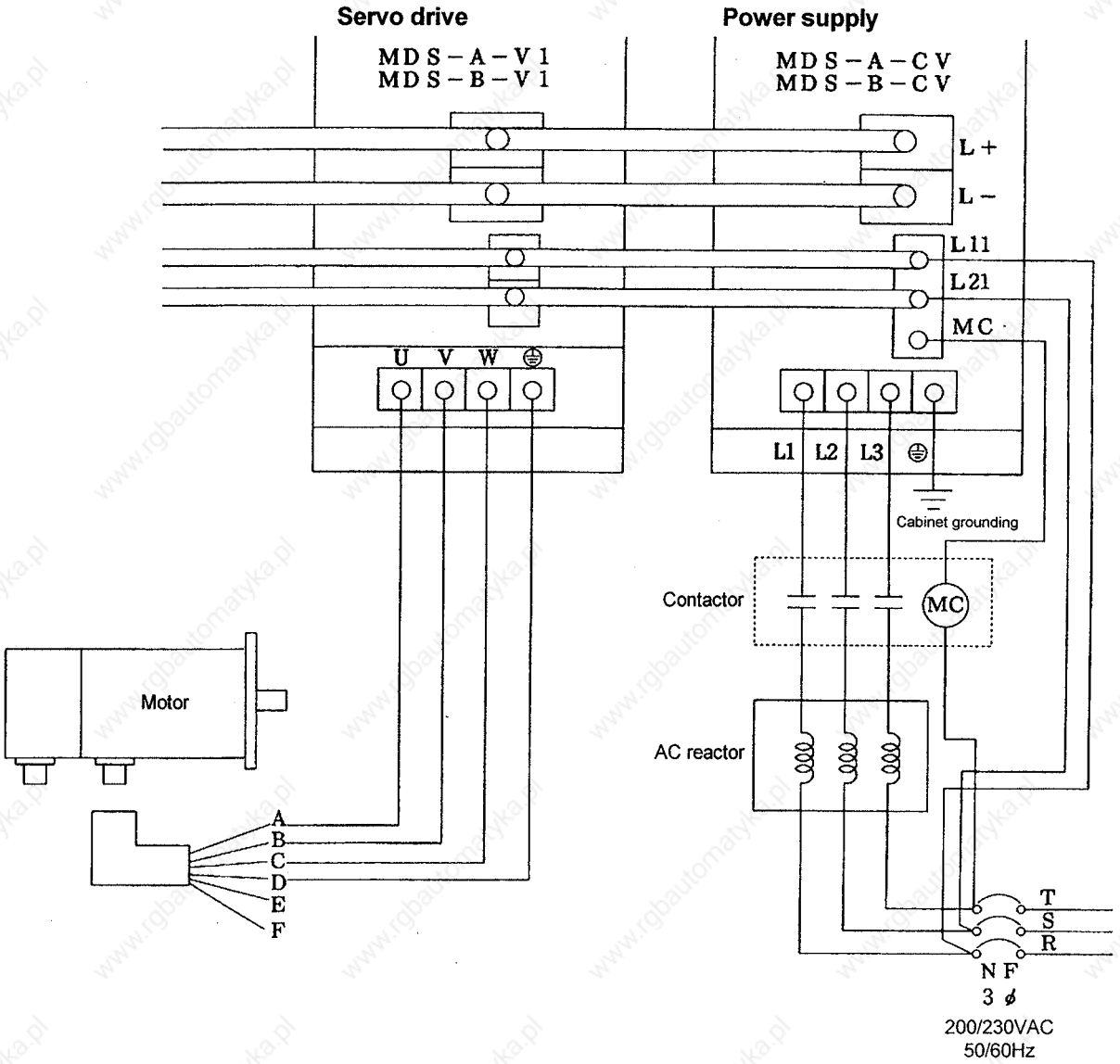

* Starting from production in April 1995, a grounding bar is enclosed with each unit when shipped. Connect the grounding wire as shown, and make sure that the grounding wires are not tightened together.

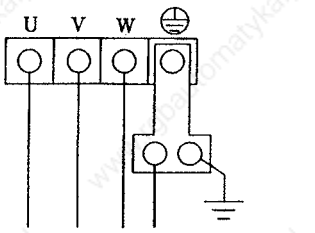

Cabinet grounding

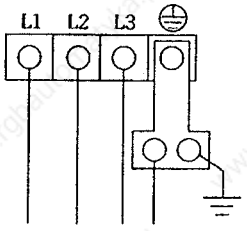

Cabinet grounding

Precautions for connections

(1) The wires and crimp terminals will differ according to the capacity.
(Refer to section 8.3 in the Chapter I Servo/Spindle system configuration.)
(2) Always ground (⏚) the power supply.
(3) The phase order of the power supply terminals L1, L2, L3 is random.
(4) Precautions for connecting servo drive terminals U, V, W
   a. Always observe the phase order for the servo amplifier terminals U, V, W and motor side pins A, B, C. The motor may vibrate and rotate suddenly if the phase order is mistaken. The phases cannot be reversed for reverse rotation.
   b. Never perform connections that might apply the power on the servo drive output terminals U, V, W. Never ground the servo drive output terminals U, V, W or connect so that grounding may occur as this may destroy the servo drive.
(5) The Cannon plug used will differ according to the motor. Refer to section 2.8 (3) for the connection drawing of the brake exciter circuit for motor with electromagnetic brake. Refer to section 2.7 (2) for the terminal box type motor.
(6) Refer to the Chapter I Servo/Spindle system configuration for the selection of the contactor, AC reactor and non-fuse breaker connected to the power supply.
(7) Make sure that the specified power is supplied to the servo drive power terminals (L1, L2, L3). If the power does not have the specified voltage, use a transformer.
(8) Do not directly apply commercial power on the motor.
(9) Check once again that the wires are connected correctly as indicated in the wiring diagram.

5.8.2 Brake

Contact connection terminals for brake (EM1, EM2)
A contact for the brake has been newly installed on the MDS-A/B-V1 servo amplifier. This contact can be used for exciting the motor with brake. Connect the electromagnetic brake cable to connector CN20.

Contact for brake specifications

Type	Specifications
Rated control capacity (resistance load)	8A 250V AC/ 5A 30V DC
Contact max. tolerable electricity (resistance load)	2000VA 150WA
Contact max. tolerable voltage/current	380V AC /8A

Examples of connection with contact for brake

(1) For AC OFF

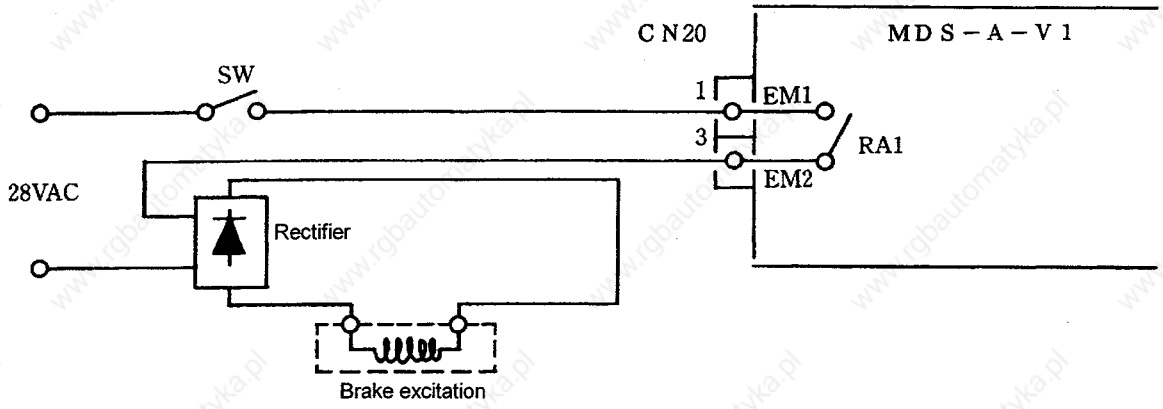

(2) For DC OFF

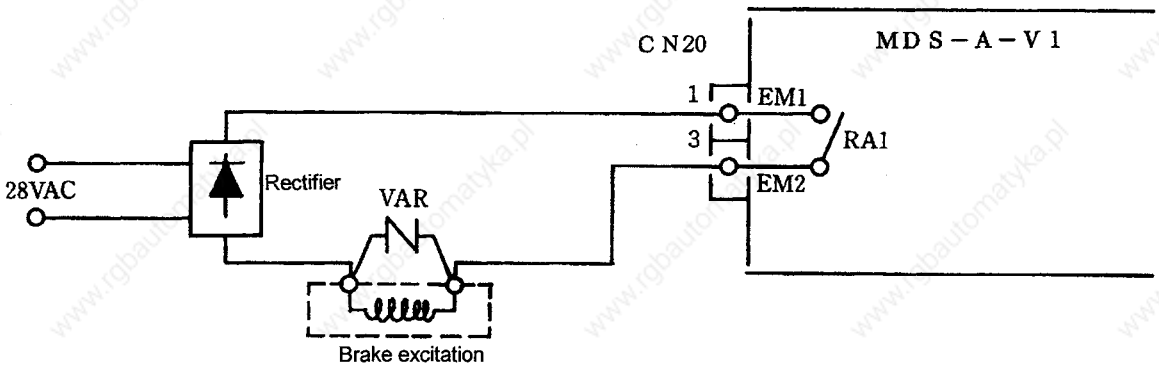

Refer to section 2.9 for the electromagnetic brake specifications and application.

5.9 Wiring system diagrams for systems

The following points differ with the conventional servo system.

a) The detector feedback interfaces are all the same. Thus, a feedback interface PCB does not need to be prepared for each specification.
b) Both 1 micron and submicrons can be handled with the same detector. Thus, the same cable can be used.
c) The power cable (L1, L2, L3) needs to be wired to only one position (power supply unit).

(1) Servo system configuration table

System		Configuration	Performance	Servo drive unit		Detector			F/B cable connecting connector	
				No. of axes	Model	Motor end detector	Motor	Machine end detector	Motor end	Machine end
Relative position detection	Semi-closed loop	Motor axis end detector	• Max. tracking performance: 5MPPS • Min. resolution: 0.0036° • Max. speed: 3000r/min	1	MDS-A-V1-□ MDS-B-V1-□	OSE104 OHE25K-6	HA40 or more	———	CN2	———
						OSE104S OHE25K-85	HA23 HA33			
				2	MDS-A-V2-□ MDS-B-V2-□	OSE104S OHE25K-108	Low inertia motor			
						Built-in encoder	HA053 HA13			
	Closed loop Ball screw end	Motor axis end detector Gear linkage or belt interlock	• Max. tracking performance: 5MPPS • Min. resolution: 0.0036° • Max. speed: 3000r/min	1	MDS-A-V1-□ MDS-B-V1-□	OSE104 OHE25K-6	HA40 or more	OSE104ET OHE25K-ET	CN2	CN3
						OSE104S OHE25K-85	HA23 HA33			
				2	MDS-A-V2-□ MDS-B-V2-□	OSE104S OHE25K-108	Low inertia motor			
						Built-in encoder	HA053 HA13			
	Closed loop Scale	Motor axis end detector Interface Unit	• Max. tracking performance (according to manufacturer) • Min. resolution (according to manufacturer) • Max. speed: 3000r/min	1	MDS-A-V1-□ MDS-B-V1-□	OSE104 OHE25K-6	HA40 or more	Various scales of pulse F/B outputs of 1μ and 0.5μ specifications can be connected. Example: MP scale (Mitsubishi Heavy Industries)	CN2	CN3
						OSE104S OHE25K-85	HA23 HA33			
				2	MDS-A-V2-□ MDS-B-V2-□	OSE104S OHE25K-108	Low inertia motor			
						Built-in encoder	HA053 HA13			
Absolute position detector	Semi-closed loop	Motor axis end detector	• Max. tracking performance: 5MPPS • Min. resolution: 0.0036° • Max. speed: 3000r/min	1	MDS-A-V1-□ MDS-B-V1-□	OSA104 OHA25K-4	HA40 or more	———	CN2	—
						OSA104S OHA25K-85	HA23 HA33			
				2	MDS-A-V2-□ MDS-B-V2-□	OSA104S OHA25K-108	Low inertia motor			
						Built-in encoder	HA053 HA13			
	Closed loop Ball screw end	Motor axis end detector Gear linkage or belt interlock	• Max. tracking performance: 5MPPS • Min. resolution: 0.0036° • Max. speed: 3000r/min	1	MDS-A-V1-□ MDS-B-V1-□	OSE104 OHE25K-6	HA40 or more	OSA104ET OHA25K-ET	CN2	CN3
						OSE104S OHE25K-85	HA23 HA33			
				2	MDS-A-V2-□ MDS-B-V2-□	OSE104S OHE25K-108	Low inertia motor			
						Built-in encoder	HA053 HA13			
	Closed loop Scale	Motor axis end detector Interface Unit	• Max. tracking performance: 0.83MPPS • Min. resolution: 1μm • Max. speed: 50m/min.	1	MDS-A-V1-□ MDS-B-V1-□	OSE104 OHE25K-6	HA40 or more	Absolute value linear scale AT-41 (Mitsutoyo)	CN2	CN3
						OSE104S OHE25K-85	HA23 HA33			
				2	MDS-A-V2-□ MDS-B-V2-□	OSE104S OHE25K-108	Low inertia motor			
						Built-in encoder	HA053 HA13			

(2) Cable system drawings for each specification

Semi-closed loop position detection system

1. 1-axis servo amplifier

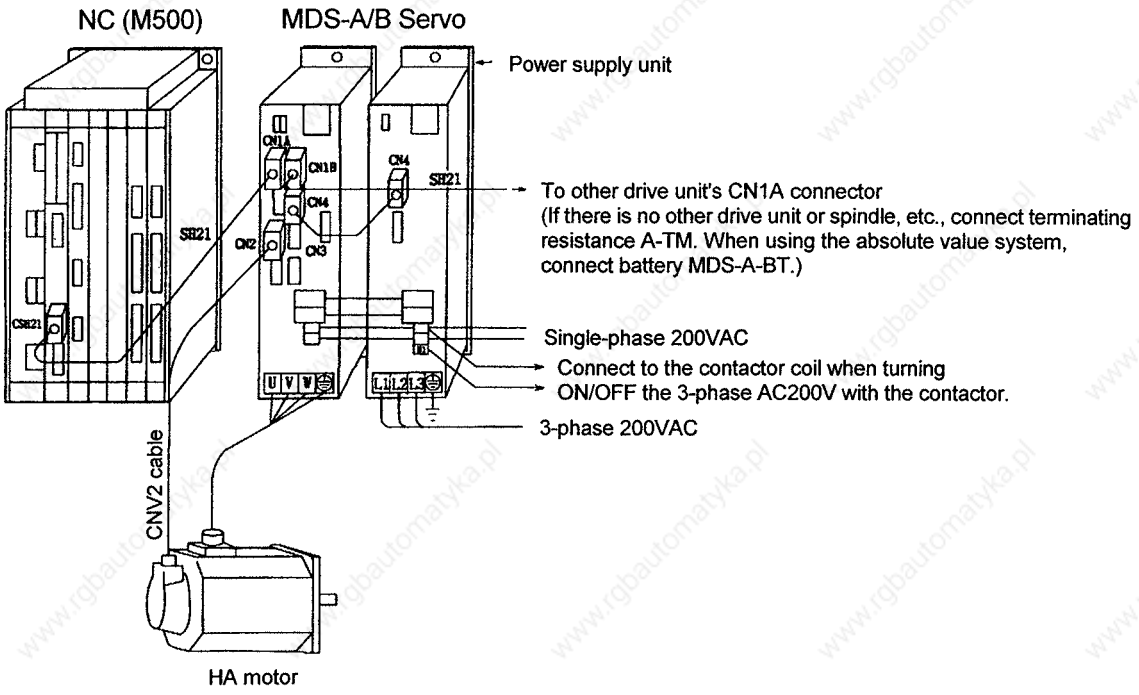

2. 2-axis servo amplifier

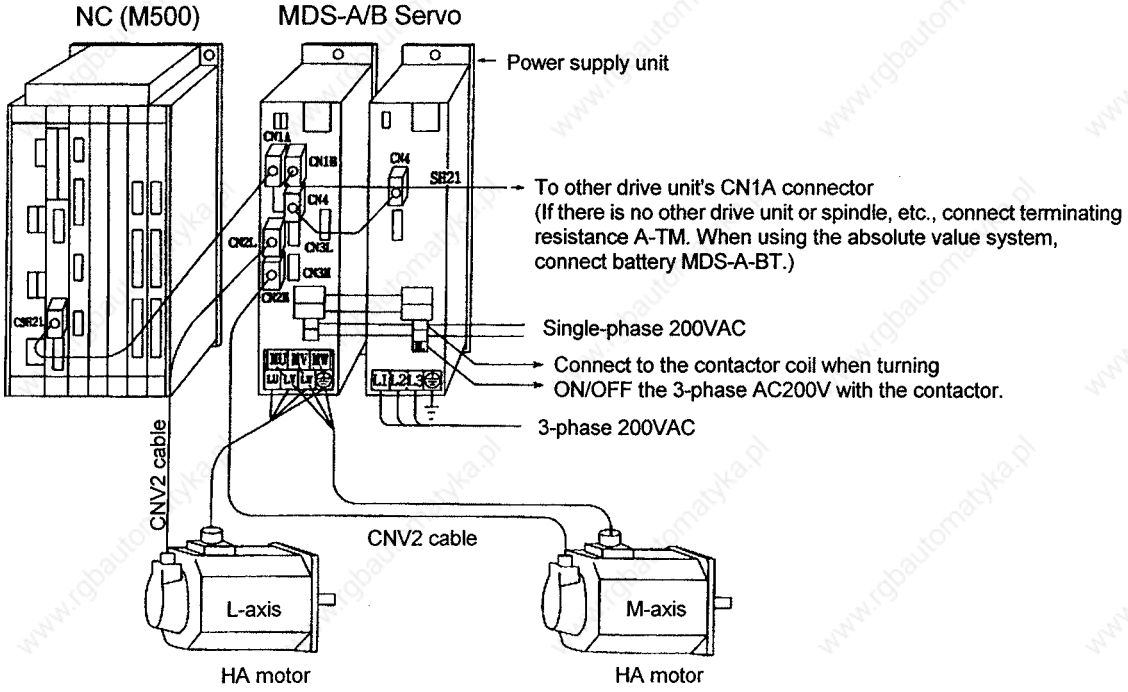

Ball screw end position detection system

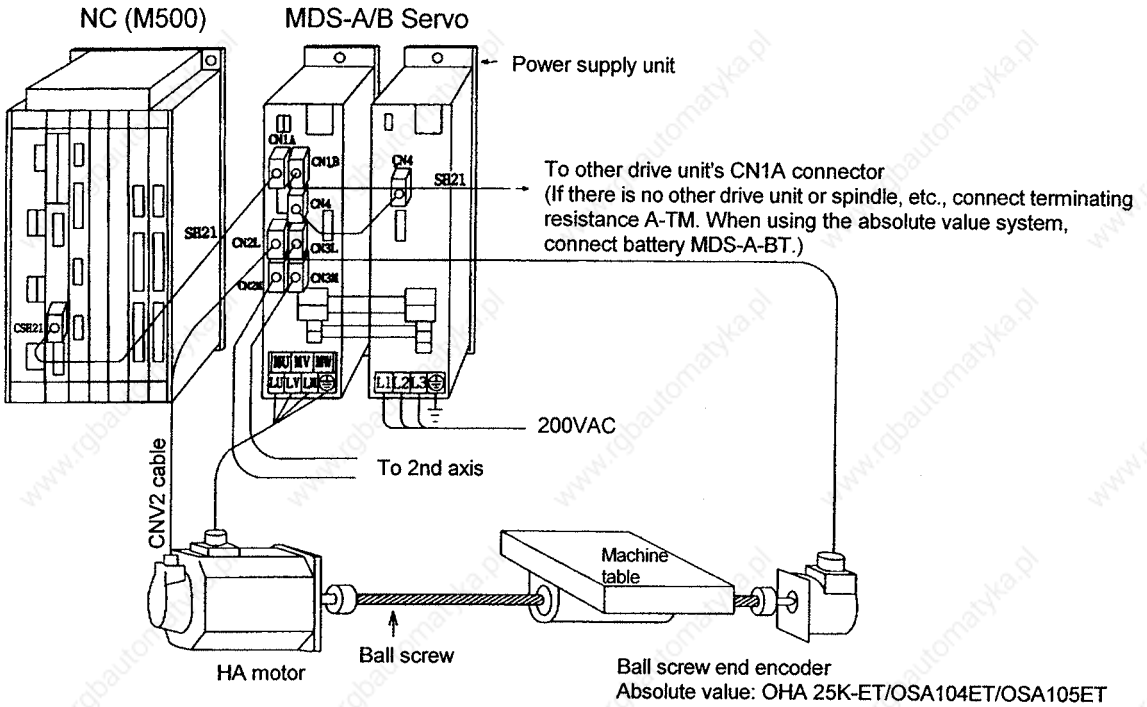

Machine end detection system

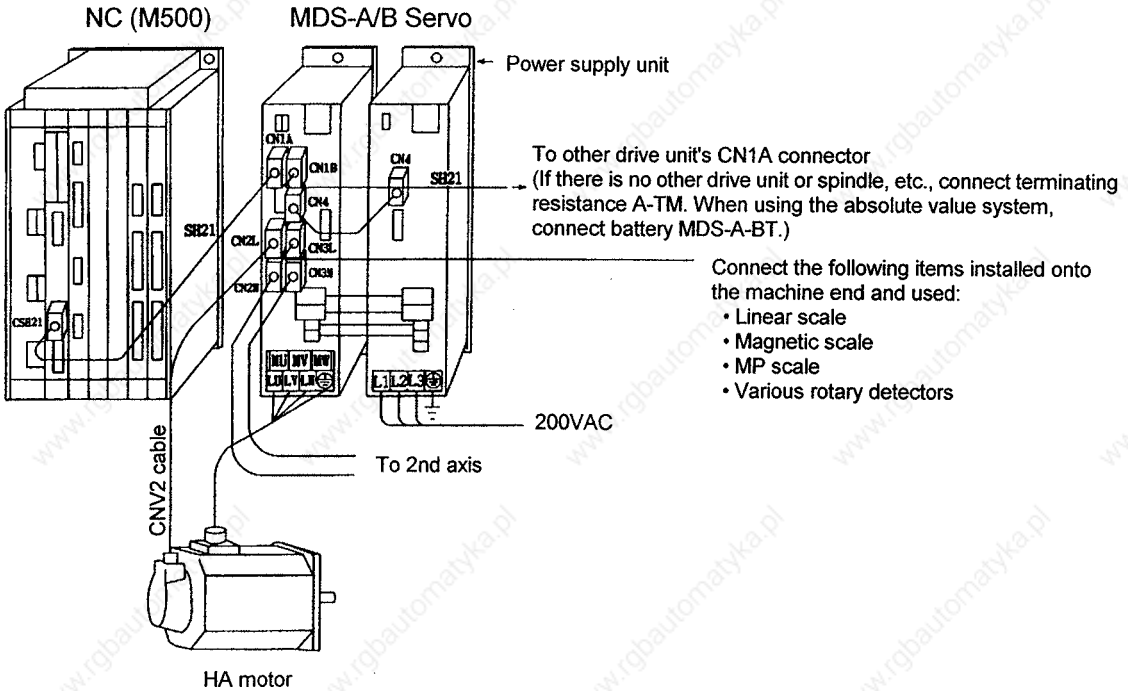

Absolute position linear scale detection system

Features
1. An interface for the scale is mounted as a standard, so the scale can be connected directly.
2. A battery is not required for the absolute value detection.
3. Both the absolute value and relative value signals are detected, so a high precision absolute position detection is possible and high-speed and high response control is possible.

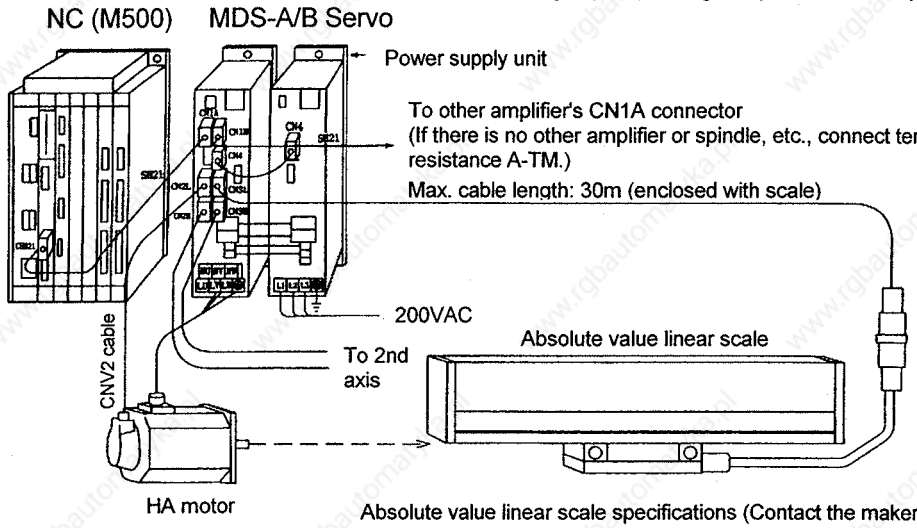

Absolute value linear scale specifications (Contact the maker for details.)

1. Maker	:	Mitsutoyo Model: AT41
2. Resolution	:	1μm
3. Precision	:	(3 + 3L/1000) μm
4. Effective length L	:	Max. 1500mm
5. Working temperature range	:	0 ~ 45°C
6. Working humidity range	:	20 ~ 80%
7. Sealing properties	:	1P53

5.10 D/A output function

5.10.1 Outline

The D/A output function is mounted in the standard system of the MDS Series. Thus, the PCB for analog monitoring required in the conventional digital servo system is not longer required.
The D/A output level differs between the MDS-A-VX Series and MDS-B-VX Series.
Refer to the 5.10.2 Hardware specifications and 5.10.5 Output magnification settings.

5.10.2 Hardware specifications

MDS-A-VX	MDS-B-VS
• 8-bit ± 5V	8-bit 0 ~ 5V
• 2 channels	
• Output pins CH1 : CN9-9 pin CH2 : CN9-19 pin GND: CN9-1 pin	

5.10.3 Parameters

The data No. and output magnification for each channel is set with the following parameters.

Name	Description
SV061	D/A channel 1 data No.
SV062	D/A channel 2 data No.
SV063	D/A channel 1 output magnification
SV064	D/A channel 2 output magnification

5.10.4 Output data No.

The data to be output to SV061 and SV062 is set. When –1 is set for the output data No., D/A output will not take place at that channel.

No.	CH1		CH2	
	Output data	Unit	Output data	Unit
– 1	D/A output not selected		D/A output not selected	
0	Speed feedback	r/min	Current command	Stall rated current %
1	Current command	Stall rated current %	Current command	Stall rated current %
2	Current command	Stall rated current %	Current command	Stall rated current %
3	Current feedback	Stall rated current %	Current feedback	Stall rated current %
4	Speed feedback low-order	r/min	Speed feedback low-order	r/min
5	Speed feedback high-order	r/min	Speed feedback high-order	r/min
6	Position droop low-order	Interpolation unit	Position droop low-order	Interpolation unit
7	Position droop high-order	Interpolation unit	Position droop high-order	Interpolation unit
8	Position F△T low-order	Interpolation unit/ NC communication cycle	Position F△T low-order	Interpolation unit/ NC communication cycle
9	Position F△T high-order	Interpolation unit/ NC communication cycle	Position F△T high-order	Interpolation unit/ NC communication cycle
10	Position command low-order	Interpolation unit	Position command low-order	Interpolation unit
11	Position command high-order	Interpolation unit	Position command high-order	Interpolation unit
12	Feedback position low-order	Interpolation unit	Feedback position low-order	Interpolation unit
13	Feedback position high-order	Interpolation unit	Feedback position high-order	Interpolation unit
125	Test output saw-tooth wave	± 5V	Test output saw-tooth wave	± 5V
126	Test output rectangular wave	± 5V	Test output rectangular wave	± 5V
127	Test output 0V	± 5V	Test output 0V	± 5V

5.10.5 Setting of output magnification

The output magnification is set in SV063 and SV064.
The D/A converter input is 7-bit excluding the symbol bit, so determine the magnification parameter A so that (input data) x A/256 is 127 or less. The output polarity will be reversed if a negative value is set.

$$\text{DATA}* \boxed{\frac{A}{256}} \rightarrow \boxed{\begin{matrix}\text{D/A}\\ 128\ \text{division}\end{matrix}} \rightarrow \text{Analog output} \quad A : \text{Parameter setting value}$$

$$\text{Analog output voltage (V)} = \left\{ \text{DATA} * \frac{A}{256} * \frac{\text{Output max. voltage}}{128} \right\} + \text{Offset voltage}$$

	D/A output max. voltage	Offset voltage
MDS-A	5.0 (V)	0 (V)
MDS-B	2.5 (V)	2.5 (V)

(Example) Speed feedback (MDS-A Series)

The output value is r/min. Thus, 2000 will be output at a speed of 2000r/min. If parameter is set to 256 (magnification 1), the D/A output voltage will be 2000/128 * 5 (V) = 78.13, and the D/A output voltage 5V will be exceeded. Thus, in this case, the parameter must be set to 16; in other words, magnification 1/16, and the D/A output voltage will be 2000 * 5/(128 * 16) = 4.88V.

(Example) Speed feedback (MDS-B Series)

The output value is r/min. Thus, 2000 will be output at a speed of 2000r/min. If parameter is set to 256 (magnification 1), the D/A output voltage will be 2000/128 * 2.5 (V) = 39.06, and the D/A output voltage 2.5V will be exceeded. Thus, in this case, the parameter must be set to 16; in other words, magnification 1/16, and the D/A output voltage will be 2000 * 2.5/(128 * 16) = 2.44V.

Analog output voltage

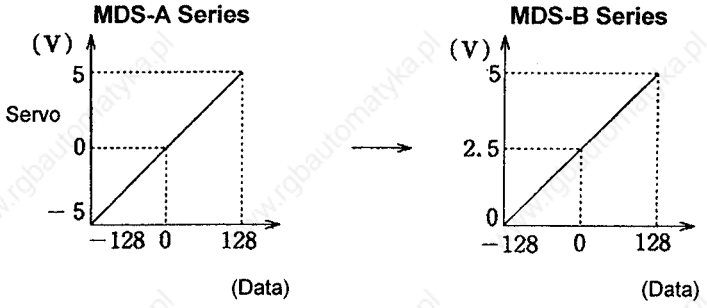

5.10.6 Others

The D/A output channel has two channels even in the 2-axis servo drive. Thus, set the output No. for the axis not to be observed in the 2-axis servo drive to –1. If the D/A output of each channel is set for both axes, the L-axis data will be output. If –1 is set in the D/A output No. for both axes, the output will be 0V.

6. MDS-A/B-V2 Servo Drive

6.1 Model configuration

2-axis servo drive unit model designation

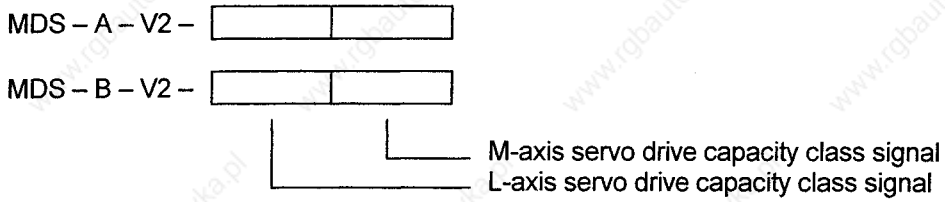

The power class symbols are the same as for the MDS-A/B-V1 servo drive.

Symbol	Capacity kW	Applicable motor			
		Standard 2000r/min	Standard 3000r/min	Low inertia L-type 2000r/min	Low inertia L-type 3000r/min
01	0.1		HA053 HA13		
03	0.3		HA23N HA33N		
05	0.5	HA40N	HA43N	HA50NL	
10	1.0	HA80N	HA83N	HA100NL	HA53NL
20	2.0	HA100N		HA150NL HA200NL	HA103NL HA153NL
35	3.5	HA200N	HA103N	HA300NL	HA203NL
45	4.5	HA300N	HA203N	HA500NL	HA303NL

6.2 Servo drive unit specifications

	Unit	2-axis amplifier model name									
		MDS-A/B-									
		V2-0101	V2-0301		V2-0303	V2-0501		V2-0503		V2-0505	V2-1005
Applicable motor		L/M	L	M	L/M	L	M	L	M	L/M	L
		HA053 HA13	HA23N HA33N	HA053 HA13	HA23N HA33N	HA40N HA43N HA50NL	HA053 HA13	HA40N HA43N HA50NL	HA23N HA33N	HA40N HA43N HA50NL	HA80N HA83N HA100L HA53NL
Output voltage	V	155V									
Rated output current	A	0.95	2.9	0.95	2.9	3.4	0.95	3.4	2.9	3.4	6.8
Continuous output current	A	1.4	3.0	1.4	3.0	5.0	1.4	5.0	3.0	5.0	8.8
Maximum output current	A	3.9	8.1	3.9	8.1	17	3.9	17	8.1	17	28
Maximum output torque (During combination with motor) Refer to 5.2VI Specifications for applicable motor.	N·m	0.686 1.372	2.746 5.590	0.686 1.373	2.746 5.590	14.220 10.200 13.043	0.686 1.373	14.220 10.200 13.043	2.746 5.590	14.220 10.200 13.043	25.497 19.221 20.888 14.220
Control system		Sine wave PWM system									
Main circuit system		Transistor inverter (Intelligent power module using IGBT)									
Braking		Regeneration brake and dynamic brake									
Tolerable ambient temperature	°C	0° to 55°C									
Tolerable ambient relative humidity	%	90% or less (with no dew condensation)									
Storage temperature	°C	–15 to 70°C									
Storage relative humidity	%	90% or less									
Atmosphere		No harmful gas and dust									
Tolerable vibration	m/s^2 (G)	$4.9m/s^2$ (0.5G)									
Tolerable shock	m/s^2 (G)	Acceleration: $49m/s^2$ (5G)									
Maximum heat dissipation	W	Refer to the servo/spindle system configuration section									
Weight	kg	4.5									5.5
Capacity	kW	0.1×2	0.3 + 0.1		0.3×2	0.5 + 0.1		0.5 + 0.3		0.5×2	1.0+0.5
Torque limit range	%	0 ~ 100%									
Tolerable load inertia		As a guideline, less than 2.5 times the motor inertia									
Noise	dB (A)	Less than 55dB									

Continued on the next page.

	Unit	2-axes amplifier model name									
		MDS-A/B-									
		V2-1005	V2-1010	V2-2010		V2-2020	V2-3510		V2-3520		V2-3535
Applicable motor		M	L/M	L	M	L/M	L	M	L	M	L/M
		HA40N HA43N HA50NL	HA80N HA83N HA100NL HA53NL	HA100N HA150NL HA200NL HA103NL HA153NL	HA80N HA83N HA100NL HA53NL	HA100N HA150NL HA200NL HA103NL HA153NL	HA200N HA103N HA300NL HA203NL	HA80N HA83N HA100NL HA53NL	HA200N HA103N HA300NL HA203NL	HA100N HA150NL HA200NL HA103NL HA153NL	HA200N HA103N HA300NL HA203NL
Output voltage	V	155V									
Rated output current	A	3.4	6.8	13	6.8	13	16	6.8	16	13	16
Continuous output current	A	5.0	8.8	18.2	8.8	18.2	25	8.8	25	18.2	25
Maximum output current	A	17	28	42	28	42	57	28	57	42	57
Maximum output torque (During combination with motor) Refer to 5.2VI Specifications for applicable motor.	N·m	14.220 10.200 13.043	25.497 19.221 20.888 14.220	41.792 31.381 31.675 22.457 22.849	25.497 19.221 20.888	41.972 31.381 31.675 22.457 22.849	59.820 40.207 51.975	25.497 19.221 20.888	59.821 40.207 51.975	41.972 31.381 31.675 22.457 22.849	59.821 40.207 51.975
Control system		Sine wave PWM system									
Main circuit system		Transistor inverter (Intelligent power module using IGBT)									
Braking		Regeneration brake and dynamic brake									
Tolerable ambient temperature	°C	0° to 55°C									
Tolerable ambient relative humidity	%	90% or less (with no dew condensation)									
Storage temperature	°C	–15 to 70°C									
Storage relative humidity	%	90% or less									
Atmosphere		No harmful gas and dust									
Tolerable vibration	m/s^2 (G)	$4.9m/s^2$ (0.5G)									
Tolerable shock	m/s^2 (G)	Acceleration: $49m/s^2$ (5G)									
Maximum heat dissipation	W	Refer to the servo/spindle system configuration section									
Weight	kg	5.5					6.0				
Capacity	kW	1.0+0.5	1.0×2	2.0+1.0		2.0×2	3.5+1.0		3.5+2.0		3.5×2
Torque limit range	%	0 ~ 100%									
Tolerable load inertia		As a guideline, less than 2.5 times the motor inertia									
Noise	dB (A)	Less than 55dB									

Continued on the next page.

	Unit	2-axes amplifier model name			
		MDS-B-			
		V2-4520		V2-4535	
		L	M	L	M
Applicable motor		HA300N HA203N HA500NL HA303NL	HA100N HA150N HA200NL HA103NL HA153NL	HA300N HA203N HA500NL HA303NL	HA200N HA103N HA300NL HA203NL
Output voltage	V	155V			
Rated output current	A	28	13	28	16
Continuous output current	A	44	18.2	44	25
Maximum output current	A	85	42	85	57
Maximum output torque (During combination with motor) Refer to 5.2VI Specifications for applicable motor.	N·m	87.573 55.898 72.569	41.972 31.381 31.675 22.457 22.849	87.573 55.898 72.569	59.821 40.207 51.975
Control system		Sine wave PWM system			
Main circuit system		Transistor inverter (Intelligent power module using IGBT)			
Braking		Regeneration brake and dynamic brake			
Tolerable ambient temperature	°C	0° to 55°C			
Tolerable ambient relative humidity	%	90% or less (with no dew condensation)			
Storage temperature	°C	–15 to 70°C			
Storage relative humidity	%	90% or less			
Atmosphere		No harmful gas and dust			
Tolerable vibration	m/s^2 (G)	$4.9m/s^2$ (0.5G)			
Tolerable shock	m/s^2 (G)	Acceleration: $49m/s^2$ (5G)			
Maximum heat dissipation	W	Refer to the servo/spindle system configuration section			
Weight	kg	6.0			
Capacity	kW	4.5+20		4.5+3.5	
Torque limit range	%	0 ~ 100%			
Tolerable load inertia		As a guideline, less than 2.5 times the motor inertia			
Noise	dB (A)	Less than 55dB			

6.3 Hardware setting

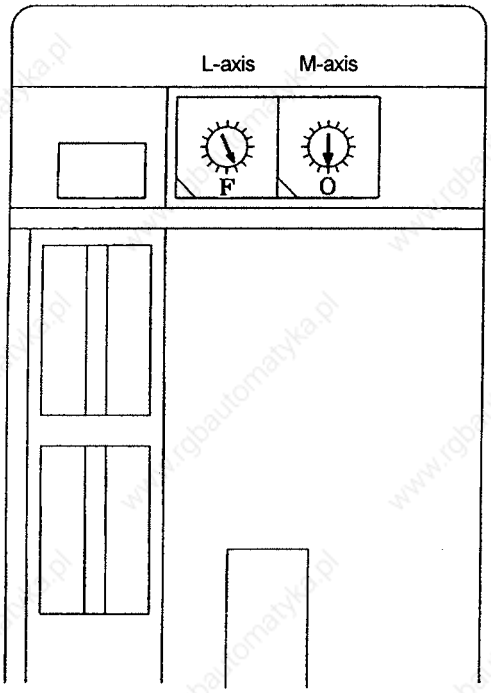

Function	Setting	Meaning
Axis No. setting CS	0	1st axis
	1	2
	2	3
	3	4
	4	5
	5	6
	6	7
	7 ~ E	Not usable
	F	Not used axis selection

The servo drive axis No. can be set by opening the upper lid (at the right of the LED status display window) on the top of the MDS-A/B-V2 servo drive unit, and turning the rotary switch. When the rotary switch is set to "F" and the servo drive power is turned on, that axis will not be controlled. Thus, set axes that are not being used to "F". (The communication with the NC will not take place during initialization, and an alarm will not occur.)
In the above drawing, the L-axis is the not used axis, and the M-axis is the 1st axis.

6.4 Status display

⚠ WARNING

1. Do not operate the switches with wet hands. Failure to observe this could lead to electric shocks.
2. Do not operate the unit with the front cover removed. The high voltage terminals and charged sections will be exposed, and could lead to electric shocks.
3. Do not open the front cover while the power is ON or during operation. Failure to observe this could lead to electric shocks.

⚠ CAUTION

1. Check the parameters before starting operation. Failure to do so could lead to unforseen movements of the machine.
2. Do not touch the servo drive unit heat radiating fins, regenerative resistor or servomotor, etc., while the power is turned ON or immediately after turning the power OFF. Some parts are heated to high temperatures, and touching these could lead to burns.

The state is displayed on the servo drive display with codes and the data is transferred to the NC side.

Display	Status	Description
AA	INITIALIZE	Waiting for NC power start up (NC power ON → OFF).
Ab	INITIALIZE	Waiting for NC power start up (When the drive unit power is turned OFF and ON and the NC power is OFF)
AC	INITIALIZE	During parameter transfer request
Ad	INITIALIZE	During parameter conversion request
AE	INITIALIZE	Waiting for main servo IT start
b#	READY OFF	Ready OFF
c#	SERVO OFF	Servo OFF
d#	SERVO ON	Servo ON
F# → 9*	WARNING	Warning being generated
F# → E*	WARNING	Warning being generated
F# → **	ALARM	Alarm being generated

\# : Axis number
* : Warning number
** : Alarm number (Refer to servo alarm and warning)

Examples of MDS-A/B-V2 drive unit status displays

We will assume that the L-axis is the 1st axis and the M-axis is the 2nd axis.

(Example 1) Display when both L-axis and M-axis are in servo ON state.

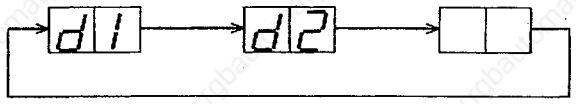

(Example 2) Display when both L-axis and M-axis are in emergency stop state.

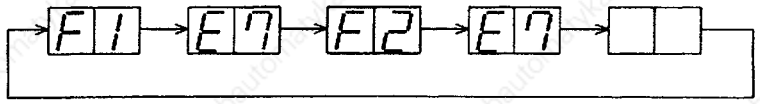

(Example 3) Display when the MOTOR OVERHEAT ALARM (46) occurred in the L-axis.

The alarm flickers.

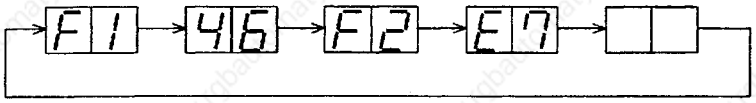

(Example 4) State when the M-axis changeover rotary switch is set to "F" and the MOTOR OVERHEAT ALARM (46) occurred in the L-axis.

The alarm flickers.

(Example 5) Display when M-axis is set to "F" and the L-axis is in the servo ON state.

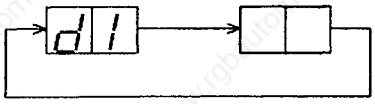

6.5 Explanation of terminal block and connectors

		Name	Application	Remarks
Connector		CN1A	For connection with NC and high-order axis	
		CN1B	For connection with battery unit and low-order axis	
		CN9	For maintenance (not used normally)	
		CN4	For connection with power supply unit	
		CN2L	For connection with L-axis motor end detector	
		CN3L	For connection with L-axis machine end detector	
		CN2M	For connection with M-axis motor end detector	
		CN3M	For connection with M-axis machine end detector	
		CN20	External brake output contact point	
Terminal block	TE2	L+	Converter voltage input (+)	
		L–	Converter voltage input (–)	
	TE3	L11	200VAC single-phase input	
		L21		
	TE1	MU	U-phase output for M-axis motor drive	
		MV	V-phase output for M-axis motor drive	
		MW	W-phase output for M-axis motor drive	
		LU	U-phase output for L-axis motor drive	
		LV	V-phase output for L-axis motor drive	
		LW	W-phase output for L-axis motor drive	
		⏚	Motor grounding	

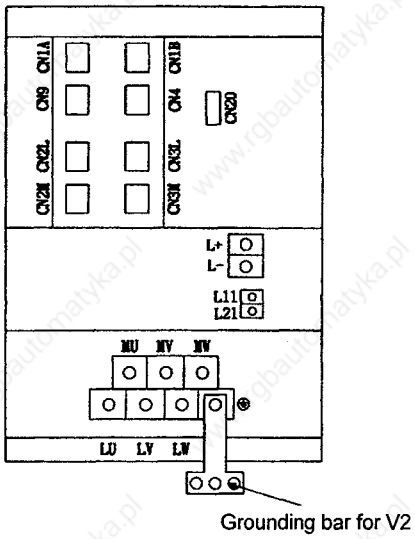

6.6 Main circuit connection

⚠ WARNING

Always ground the servo drive unit and servomotor with Class 3 or higher grounding.

⚠ CAUTION

1. Correctly connect the power phases (U, V, W) of the servo drive unit and servomotor. Failure to do so could cause the servomotor to malfunction.
2. Do not apply a voltage other than that specified to each terminal. Failure to observe this could lead to ruptures or trouble.

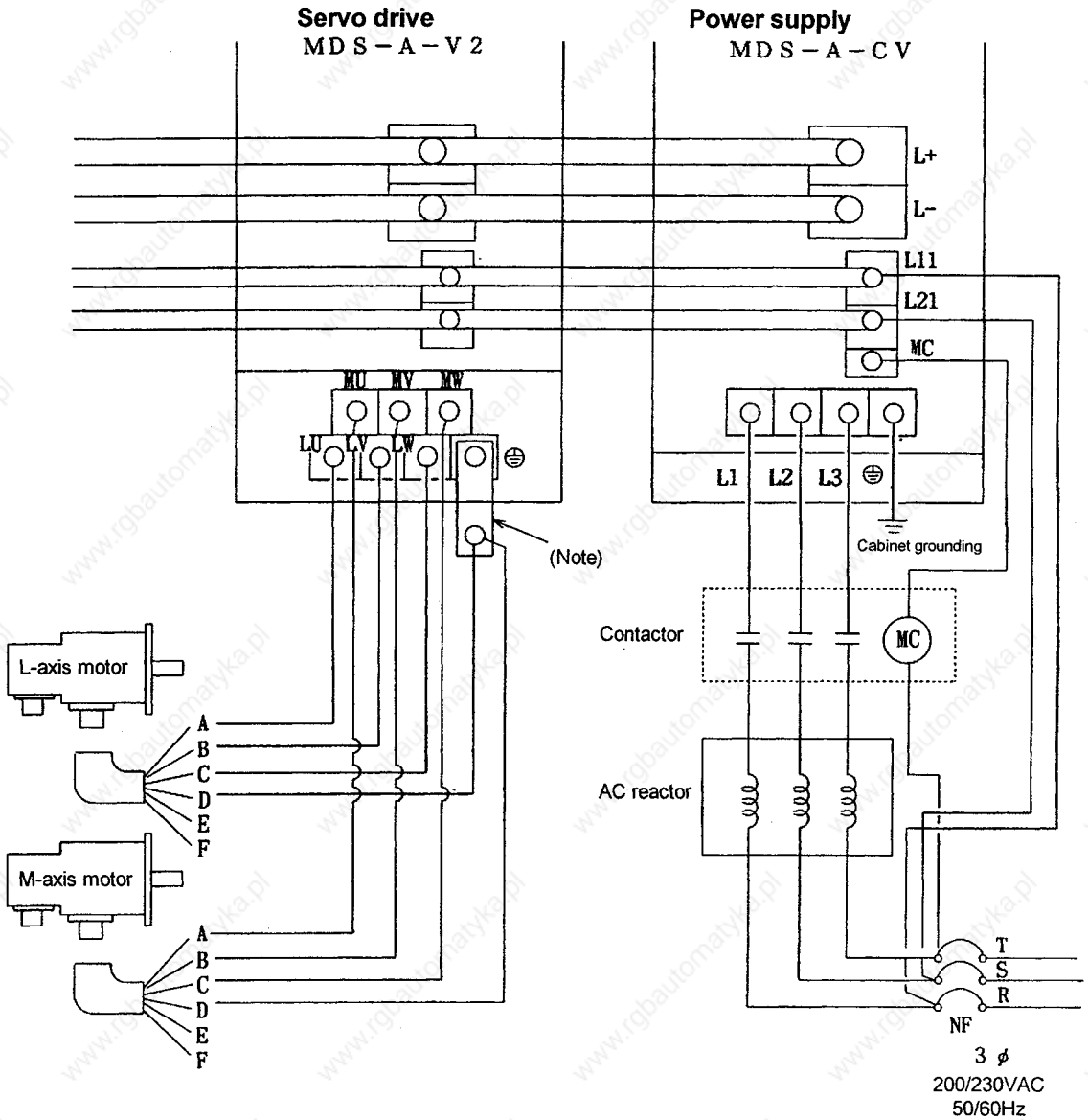

* Starting from production in April 1995, a grounding bar is enclosed with each unit when shipped. Connect the grounding wire as shown, and make sure that the grounding wires are not tightened together.

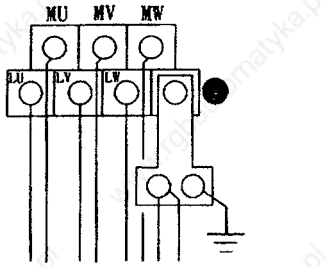

Cabinet grounding

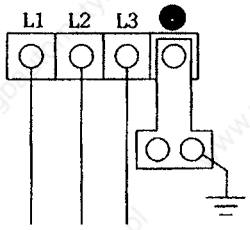

Cabinet grounding

Precautions for connections

(1) The wires and crimp terminals will differ according to the capacity.
(Refer to section 8.3 in the Chapter I Servo/Spindle System Configuration.)
(2) Always ground (G) the power supply.
(3) The phase order of the power supply unit's power supply terminals L1, L2, L3 is random.
(4) Precautions for connecting servo drive terminals U, V, W
   a. Always observe the phase order for the servo drive terminals U, V, W and motor side pins A, B, C. The motor may vibrate and rotate suddenly if the phase order is mistaken. The phases cannot be reversed for reverse rotation.
   b. Never perform connections that might apply the power on the servo drive output terminals U, V, W. Never ground the servo drive output terminals U, V, W or connect so that grounding may occur as this may destroy the servo drive.
   c. Do not reverse the connections for the servo drive output terminals L-axis (LU, LV, LW) and M-axis (MU, MV, MW). Make sure that the following is established: L-axis motor capacity ≥ M-axis motor capacity.
(5) The Cannon plug used will differ according to the motor. Refer to section 2.8 (3) for the connection drawing of the brake exciter circuit for motor with electromagnetic brake. Refer to section 2.7 (2) for the terminal box type motor.
(6) Refer to the Chapter I Servo/Spindle System Configuration for the selection of the contactor, AC reactor and non-fuse breaker connected to the power supply.
(7) Make sure that the specified power is supplied to the servo drive power terminals (L1, L2, L3). If the power does not have the specified voltage, use a transformer.
(8) Do not directly apply commercial power on the motor.
(9) Check once again that the wires are connected correctly as indicated in the wiring diagram.

7. Selection of Capacity

7.1 Selection of servo system

7.1.1 Types of drive systems

Examples of the drive system format are shown below.

Types of motion directions

Linear		3. Rotating
1. Horizontal	2. Vertical	
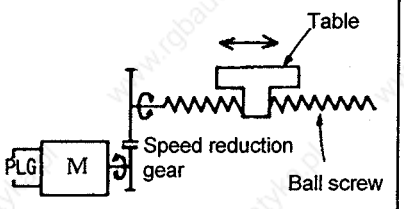	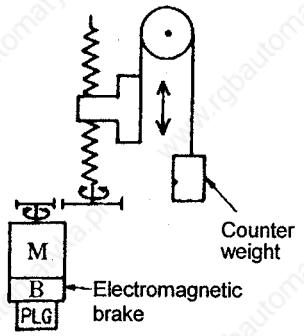	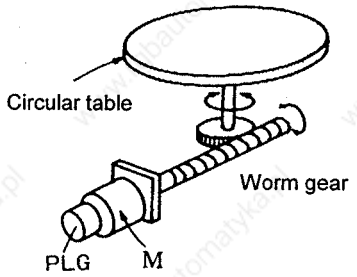

Type of drive systems

	1. Ball screw (direct connection)	2. Ball screw (gear linkage)	3. Rack and pinion
Drive systems	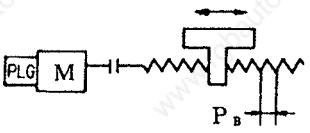	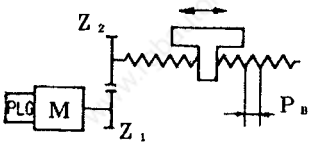	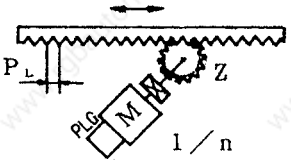
Moving amount per motor rotation	$\triangle S = P_B$	$\triangle S = P_B \cdot \frac{Z_1}{Z_2} = P_B \cdot \frac{1}{n}$	$\triangle S = P_L \cdot Z \cdot \frac{1}{n}$
	4. Roll feed	**5. Chain drive (direct connection)**	**6. Chain and timing belt drive**
Drive systems	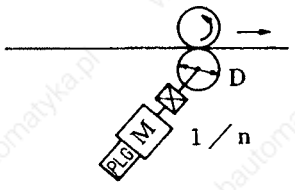	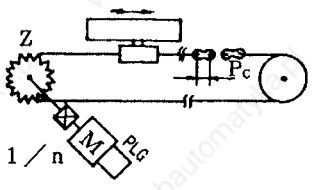	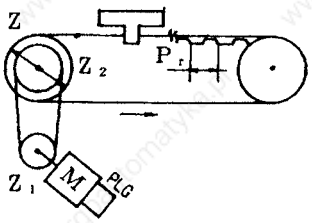
Moving amount per motor rotation	$\triangle S = \pi \cdot D \cdot \frac{1}{n}$	$\triangle S = P_c \cdot Z \cdot \frac{1}{n}$	$\triangle S = P_r \cdot Z \cdot \frac{Z_1}{Z_2} = P_r \cdot Z \cdot \frac{1}{n}$

As an example, the horizontal drive operation is listed. However, the same drive system is available in the vertical and rotation drive operations.

7.1.2 Selection of servomotor

Select a motor that satisfies the following five items so that the performance of the AC servo system can be brought out to the fullest.

(1) Maximum speed

The motor speed during rapid traverse must be within the motor's maximum speed.

$N_{max} \geq N$ Nmax : Motor maximum speed

If the drive system is the gear linkage ball screw, calculate the motor speed with the following equation, and confirm that the calculated value is less than the motor's maximum speed. Note that the maximum speed may be restricted by the detector.

Configuration on machine side	Calculation equation
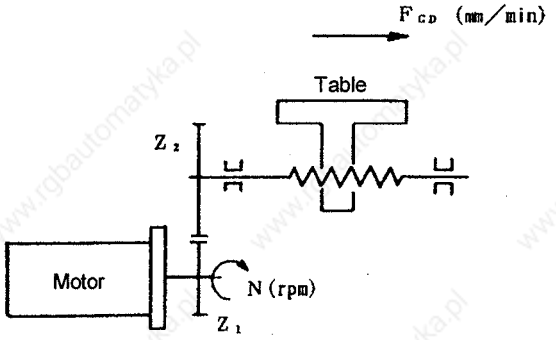	$N = \frac{F_{GO}}{P_B} \times n \leq N_{max}$ Nmax : Motor maximum speed (r/min) N : Motor speed (r/min) F_{GO} : Rapid traverse rate (mm/min) P_B : Feed screw pitch (mm/rev) n : Drive gear ratio Z_1 : Number of gear teeth on motor shaft Z_2 : Number of gear teeth on feed screw shaft n : $\frac{\text{Motor speed}}{\text{Feed screw speed}} = \frac{Z_2}{Z_1}$

(2) Motor shaft conversion load inertia

The load inertia should be within 2.5 times the motor inertia. Use is possible if it exceeds 2.5 times, but the servo adjustment range will be reduced, and the time constants must be increased.

$$J_M \times 2.5 \geq J_L$$

J_L : Maximum load inertia (motor shaft conversion) [$\times 10^{-4}$kg·m^2]
J_M : Motor inertia [$\times 10^{-4}$kg·m^2]
J_M : Find the motor inertia from the motor data sheet. When using the brakes, add the brake inertia.
J_L : Obtain the maximum load inertia with the following equation. The example shows the ball screw drive system.

Item	Configuration on machine side	Calculation equation
Load inertia of substance linearly moved (Motor shaft conversion)	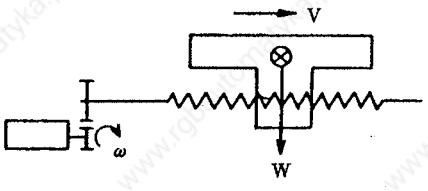	$J_L = 100W \cdot \left[\frac{10V}{60\omega}\right]^2 = 100W \cdot \left[\frac{10V}{2\pi N}\right]^2$ $= 100W \cdot \left[\frac{P}{2\pi \times 10}\right]^2$ where J_L : Load inertia ($\times 10^{-4}$kg·m^2) V : Speed of substance linearly moved (mm/min) ω : Angular speed of motor (rad/s) N : Motor speed (r/min) P : Moving amount of substance linearly moved per motor rotation (mm) W : Mass of substance linearly moved (kg)
Example of calculating load inertia	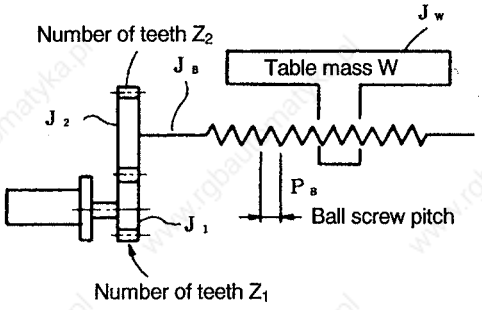	$J_L = J_1 + \left[\frac{Z_1}{Z_2}\right]^2 (J_2 + J_B + J_W)$ $= J_1 + \left[\frac{Z_1}{Z_2}\right]^2 \left\{ J_2 + J_B + 100W \cdot \left[\frac{P}{2\pi \times 10}\right]^2 \right\}$ where J_L : Load inertia ($\times 10^{-4}$kg·m^2) J_1 : Pinion inertia ($\times 10^{-4}$kg·m^2) J_2 : Gear inertia ($\times 10^{-4}$kg·m^2) J_B : Ball screw inertial ($\times 10^{-4}$kg·m^2) J_W : Inertia adjacent to ball screw on table ($\times 10^{-4}$kg·m^2) P_B : Ball screw pitch (mm) W : Table mass (kg)

(3) Acceleration/deceleration torque

The acceleration/deceleration torque should be within 80% of the amplifier's maximum output torque.
The following calculation equation is used for the acceleration/deceleration torque regardless of the index acceleration or linear acceleration.

$$T_A max \times 0.8 \geq \frac{2\pi N (J_L + J_M)}{60 T_s} + T_F$$

N : Motor speed during rapid traverse [r/min]
T_S : Acceleration/deceleration time constant during rapid traverse [s]
T_F : Motor conversion load torque during rapid traverse [N·m]
$T_A max$: Amplifier maximum output torque (when used in combination with motor) [N·m]
$T_A max$: Find the amplifier maximum output torque from the servo drive unit specifications.

(4) Continuous effective load torque

The continuous effective load torque should be within 80% of the motor rated torque (during normal stall).

$$T_{MS} \times 0.8 \geq Trms$$

T_{MS} : Motor rated torque [N·m]
Trms : Continuous effective load torque [N·m]

The continuous effective load torque is calculated as shown below from the machine's operation pattern.

Operation pattern	Calculation equation
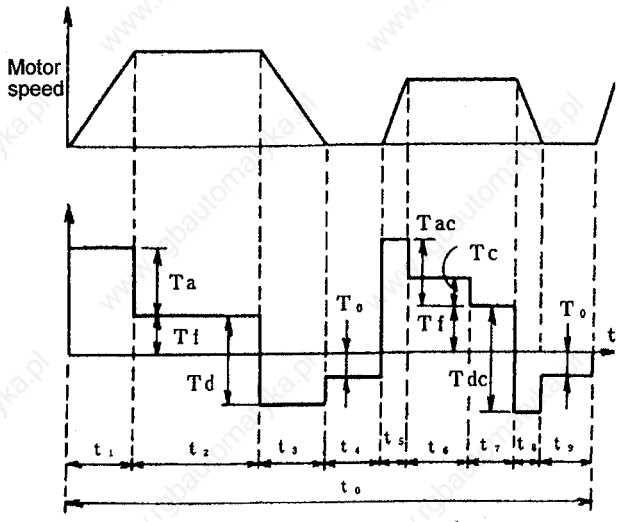	$Trms = \sqrt{\frac{X}{to}}$ $X = (Ta + Tf)^2 t_1 + Tf^2 t_2 + (Td - Tf)^2 t_3 + To^2 t_4 + (Tac + Tf)^2 t_5 + (Tc + Tf)^2 t_6 + Tf^2 t_7 + (Tdc - Tf)^2 t_8 + To^2 t_9$ where Trms : Continuous effective load torque (N·m) Ta : Acceleration torque (N·m) Td : Deceleration torque (N·m) Tf : Frictional load torque (N·m) To : Load torque in stop state (N·m) Tac : Acceleration torque in cutting state (N·m) Tdc : Deceleration torque in cutting state (N·m) Tc : Cutting torque (N·m)

However, if the cutting maximum torque and maximum duty (%) are known, the selection conditions can be found easily with the following equation.

$$T_{MS} \times 0.8 \geq Trms = Tc \sqrt{\frac{D}{100}}$$

T_{MS} : Motor rated torque [N·m]
Trms : Continuous effective torque [N·m]
Tc : Operational maximum torque [N·m]
D : Maximum duty [%]

(5) Duty ON time

The maximum duty ON time should be within the tolerable time listed in the motor data sheet. However, this does not need to be checked if the cutting maximum torque is less than the rated torque of 100%.

$$T_{LOn} \leq T_{MOn}$$

T_{LOn} : ON time of maximum duty [min] (machine manufacturer specification)
T_{MOn} : ON time of motor tolerable duty [min] (data sheet)

Example)

In HA23N, when the maximum cutting torque Tc is 1.37 [N·m] and the duty D is 40 [%], the ON time of the tolerable duty becomes:

$$\text{Torque percent} = \frac{1.37}{0.98} = 1.4 \rightarrow 140\%$$

From the chart, $T_{MOn} = 5$ [min]

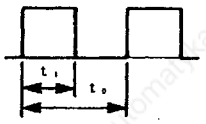

$$\text{Duty percent} = \frac{t_1}{t_0} \times 100\%$$

t_1 : ON time (min)

HA23/t th = 20.25min

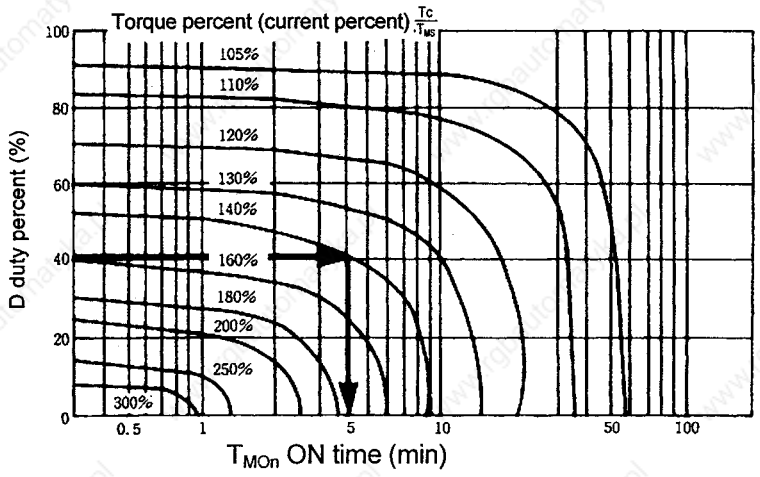

(6) Unbalance load torque

The unbalance load torque must be kept to within 50% of the motor rated torque (at normal stall).

$$T_{MS} \times 0.5 \geq To$$

T_{MS} : Motor rated torque [kg•cm]
To : Unbalance load torque when stopped

(7) Example of selection

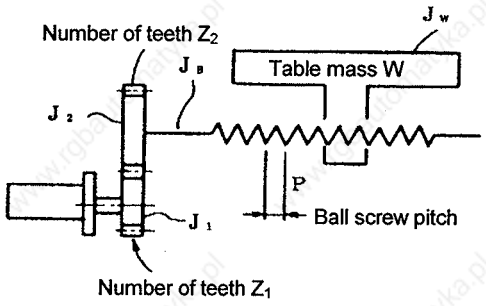

When the following data is known for the above drive system:

Gear ratio	N = 3/5
Ball screw pitch	P = 10mm
Rapid traverse rate	F = 12000mm/min
Table mass	W = 170kg
Ball screw inertia	$J_B = 7.45\times10^{-4}$kg·m^2
Gear inertia	$J_2 = 45.11\times10^{-4}$kg·m^2
Pinion inertia	$J_1 = 6.28\times10^{-4}$kg·m^2
Motor shaft conversion torque during rapid traverse	T_F = 2.94N·m
Motor shaft conversion torque during maximum cutting	T_C = 31.58N·m
Maximum cutting duty	D = 20%

The motor maximum speed is :

$$12000 \times \frac{1}{10} \times \frac{5}{3} = 2000 \text{ rpm}$$

The motor shaft conversion load inertia is:

$$J_L = J_1 + N^2 \cdot \left\{ J_2 + J_B + 100W \cdot \left[\frac{P}{2\pi\times10} \right]^2 \right\} = 180.22\times10^{-4}\text{kg·m}^2$$

Thus, the motor inertia J_M must satisfy the following:

$$J_M \geq \frac{J_L}{2.5} = 72.09\times10^{-4}\text{kg·m}^2$$

From this, HA200N (inertia = 131.0×10^{-4}kg·m^2) can be selected.
The maximum torque Tmax during acceleration/deceleration is :

$$Tmax = \frac{2\pi N (J_L + J_M)}{60T_s} + T_F$$

$$= \frac{6.52}{T_s} + 2.94$$

The drive unit that corresponds to HA200N is A-V1-35, and the drive unit's maximum output torque is 59.820N·m (Tamax) as found in the drive unit specifications.

From Tamax × 0.8 ≥ Tmax :

$$47.86 \geq \frac{6.52}{T_s} + 2.94$$

Therefore, Ts ≥ 145msec

Thus, the rapid traverse acceleration/deceleration time constant is 150msec:
The continuous effective load torque Trms is :

$$Trms = Tc\sqrt{\frac{D}{100}}$$

$$= 31.58\sqrt{\frac{20}{100}}$$

$$= 14.12$$

The rated torque T_{MS} for HA200N is 22.6N·m.
So the $T_{MS} \times 0.8 \geq$ Trms conditions are satisfied.
The maximum cutting torque Tc (31.58N·m) is 140% of the rated torque (22.6N·m), so the duty cycle ON time is 40 minutes or longer from the HA200N characteristic graph.
Thus, it can be seen that the V1-35 and motor HA200N are compatible.

(7) Reference

1. Calculation of load inertia

Item	Configuration on machine side	Calculation equation
Cylinder load inertia	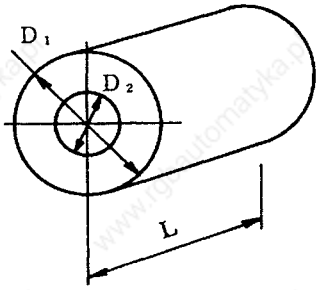 See [Appendix 1].	$J_L = \frac{10 \cdot \pi \cdot \rho \cdot L}{32} (D_1^4 - D_2^4)$ $= \frac{W}{8g} (D_1^2 + D_2^2)$ where J_L : Load inertia ($\times 10^{-4}$kg·m^2) ρ : Specific gravity (kg/m^3) L : Length of cylinder (mm) D_1 : Outer diameter of cylinder (mm) D_2 : Inner diameter of cylinder (mm) W : Mass (kg) Specific gravities of materials Steel : 7.8×10^{-9}kg/m^3 Aluminum : 2.7×10^{-9}kg/m^3 Copper : 8.96×10^{-9}kg/m^3

Although the inertia is expressed by inertia moment, or GD^2, their concept is the same. In this chapter, the relation of the moment of inertia and GD^2 is as follows for convenience.

(1) Inertia moment (J kg·m^2) = (mass kg) × (rotation radius m)^2

(2) GD^2 (GD^2 kg·m^2) = (mass kg) × (rotation diameter m)^2

(3) Conversion equation of J and GD^2 $J = \frac{GD^2}{4}$

Item	Configuration on machine side	Calculation equation
Load inertia of substance linearly moved (Motor shaft conversion)	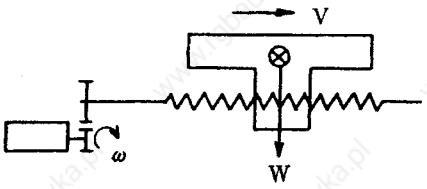	$J_L = 100W \cdot \left[\frac{10V}{60\omega}\right]^2 = 100W \cdot \left[\frac{10V}{2\pi N}\right]^2$ $= 100W \cdot \left[\frac{P}{2\pi \times 10}\right]^2$ where J_L : Load inertia ($\times 10^{-4}$kg·m^2) V : Speed of substance linearly moved (mm/min) ω : Angular speed of motor (rad/s) N : Motor speed (r/min) P : Moving amount of substance linearly moved per motor rotation (mm) W : Mass of substance linearly moved (kg)
Load inertia of substance lifted up	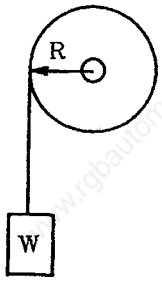	$J_L = W \cdot R^2 + J_P$ where J_L : Load inertia ($\times 10^{-4}$kg·m^2) J_P : Inertia of pulley ($\times 10^{-4}$kg·m^2) R : Radius of pulley (mm)
Load inertia J_{LO} is decelerated (accelerated) and connected to motor shaft	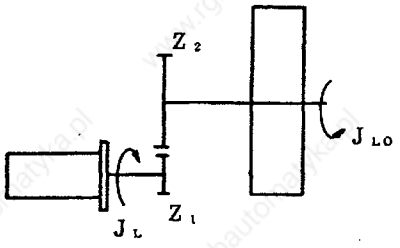	$J_L = \left[\frac{Z_1}{Z_2}\right]^2 \times J_{LO}$ where J_L : Load inertia ($\times 10^{-4}$kg·m^2) (Motor shaft conversion) J_{LO} : Load inertia at rotation center of rotating substance ($\times 10^{-4}$kg·m^2) Z_1 : Number of gear teeth on motor shaft side Z_2 : Number of gear teeth on deceleration (deceleration) side

Item	Configuration on machine side	Calculation equation
Example of calculating load inertia	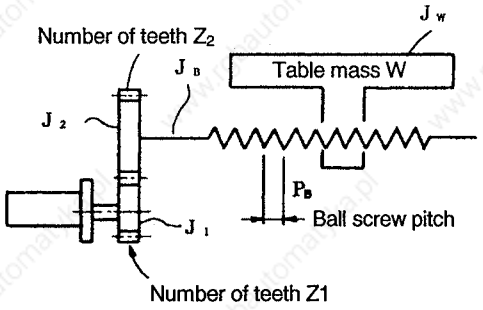	$J_L = J_1 + \left[\frac{Z_1}{Z_2}\right]^2 (J_2 + J_B + J_W)$ $= J_1 + \left[\frac{Z_1}{Z_2}\right]^2 \left\{ J_2 + J_B + 100W \cdot \left[\frac{P}{2\pi \times 10}\right]^2 \right\}$ where J_L : Load inertia ($\times 10^{-4}$kg·m^2) J_1 : Pinion inertia ($\times 10^{-4}$kg·m^2) J_2 : Gear inertia ($\times 10^{-4}$kg·m^2) J_B : Ball screw inertial ($\times 10^{-4}$kg·m^2) J_W : Inertia adjacent to ball screw on table ($\times 10^{-4}$kg·m^2) P_B : Ball screw pitch (mm) W : Table mass (kg)

2. Example of load torque calculation

Item	Configuration on machine side	Calculation equation
Load torque of machine linearly moved (motor shaft conversion)	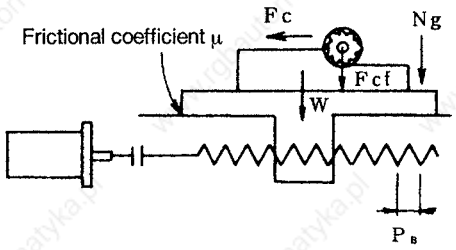	$T_L = \frac{F \cdot P}{2\times10^{-3}\cdot\pi\eta} + T_F$ where T_L : Motor shaft conversion load torque (N·m) F : Axial force of machine linearly moved (N) P : Movement of machine per motor rotation (mm/rev) η : Ball screw efficiency T_F : Motor shaft conversion frictional load torque (N·m)
	• When a drive gear is used: 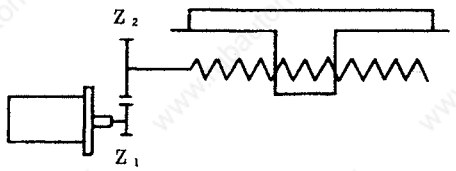	$T_L = \frac{F \cdot P_B}{2\times10^{-3}\pi} \cdot \frac{Z_1}{Z_2} + T_F$ where T_L : Load torque converted into motor shaft (N·m) F : Axial force of machine linearly moved (N) P_B : Ball screw pitch (mm/rev) η : Efficiency of ball screw and drive gear Z_1, Z_2 : Number of drive gear teeth T_F : Load torque converted into motor shaft (N·m) $F = Fc + \mu (W + Ng + Fcf)$ where Fc : Axial component force in cutting state (N) W : Full mass of table (kg) Ng : Gib tightening force on table guide surface (kg) Fcf : Component force perpendicular to shaft in cutting state (back component) (kg) μ : Dynamic friction coefficient

Item	Configuration on machine side	Calculation equation
Load torque of rotating machine (motor shaft conversion)	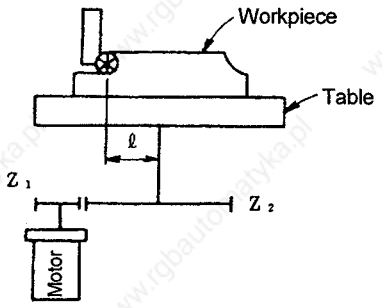	$T_L = F \cdot \frac{\ell}{10^3} \cdot \frac{Z_1}{Z_2} \cdot \frac{1}{\eta} + T_F$ where T_L : Motor shaft conversion load torque (N·m) F : Tangential direction force of rotating machine (N) ℓ : Distance from rotation center to working point of F (mm) Z_1 : Number of gear teeth on motor side Z_2 : Number of gear teeth on table side η : Efficiency of drive system T_F : Motor shaft conversion frictional load torque (N·m)

Precautions for calculating load torque

(1) The maximum value of the load torque should be selected in the actual machine operation state. When the selected load torque is actually smaller than that used, an overload may occur.

(2) When the machine table is separated from the cutting position, the frictional load torque may be momentarily varied by the cutting force on the table guide surface.

7.2 Determing the coasting amount with emergency stop

When the system detects an abnormality, the machine's motor is stopped by a dynamic brake. The coasting amount of the machine can be obtained by the following equation.

$$Lmax = \frac{F_{GO} \times 10^3}{60} \left\{ 0.03 + (AN^2 + B)\left(1 + \frac{J_L}{J_M}\right) \times 1.1 \right\}$$

where

Lmax : Coasting amount of machine (mm)
F_{GO} : Feedrate (rapid traverse) (m/min)
N : Motor speed (maximum speed) (r/min)
A : Coefficient (see the following table)
B : Coefficient (see the following table)
J_L : Motor shaft conversion load inertia ($\times 10^{-4}$kg·m^2)
J_M : Motor shaft rotor inertia ($\times 10^{-4}$kg·m^2)

Note : Lmax deviates for ±10% depending on the induced voltage constant.

Motor model	Motor inertia $J_M \times 10^{-4}$kg·m^2	Coefficients	
		A	B
HA053	0.18	0.13×10^{-9}	13.18×10^{-3}
HA13	0.36	0.15×10^{-9}	8.39×10^{-3}
HA23N	0.98	0.25×10^{-9}	6.66×10^{-3}
HA33N	1.96	0.39×10^{-9}	4.28×10^{-3}
HA40N	9.8	2.07×10^{-9}	11.47×10^{-3}
HA43N	9.8	1.79×10^{-9}	13.48×10^{-3}
HA80N	19.6	1.77×10^{-9}	9.73×10^{-3}
HA83N	19.6	1.44×10^{-9}	12.54×10^{-3}
HA100N	68.6	4.82×10^{-9}	16.68×10^{-3}
HA103N	68.6	3.87×10^{-9}	27.72×10^{-3}
HA200N	131.0	2.65×10^{-9}	22.61×10^{-3}
HA203N	131.0	1.24×10^{-9}	49.97×10^{-3}
HA300N	192.0	1.71×10^{-9}	31.05×10^{-3}
HA700N	254.0	1.31×10^{-9}	37.84×10^{-3}
HA900N	319.0	1.39×10^{-9}	44.01×10^{-3}
HA303N	192.0	0.68×10^{-9}	62.16×10^{-3}
HA703N	254.0	0.69×10^{-9}	73.15×10^{-3}
HA50NL	2.75	2.31×10^{-9}	2.56×10^{-3}
HA100NL	5.49	2.04×10^{-9}	2.92×10^{-3}
HA150NL	8.24	3.54×10^{-9}	3.26×10^{-3}
HA200NL	19.6	1.90×10^{-9}	6.56×10^{-3}
HA300NL	29.4	1.88×10^{-9}	6.42×10^{-3}
HA500NL	88.3	2.12×10^{-9}	19.40×10^{-3}
HA53NL	2.7	1.57×10^{-9}	3.17×10^{-3}
HA103NL	5.5	1.16×10^{-9}	3.85×10^{-3}
HA153NL	8.2	0.89×10^{-9}	4.81×10^{-3}
HA203NL	19.6	1.17×10^{-9}	7.46×10^{-3}
HA303NL	29.4	1.04×10^{-9}	9.58×10^{-3}
HA503NL	88.3	1.32×10^{-9}	26.25×10^{-3}
HA-LH11K2-S1	118.0	2.31×10^{-9}	11.32×10^{-3}
HA-LH15K2-S1	290.0	3.73×10^{-9}	20.36×10^{-3}

IV. MDS-A-SP, MDS-B-SP
Spindle System Section

MDS-A-CSP
Large Capacity Spindle Drive Section

1. Outline

1.1 Features of the MDS-A-SP and MDS-B-SP spindle system

(1) The converter that was conventionally built into the spindle controller has been installed in the power supply unit (MDS-A-CV and MDS-B-CV), and can be used commonly with the other axis drive units. This allows great reductions in size and weight.
(2) The speed response has been improved by using a high-speed CPU, and the cutting performance and cutting precision during positioning control has been improved.
(3) A high-speed orientation method that allows direct orientation from high-speeds has been incorporated allowing smooth operations and minimum orientation times.
(4) All spindle parameters can be set from the NC CRT screen thus enhancing the operability.

1.2 Precautions for use

(1) The motor rated output is guaranteed with the controller rated input voltage (200/220/230VAC). The rated output may not be achieved if the input voltage fluctuates and drops to 200VAC or less.
(2) A harmonic chopper voltage that is PWM controlled is applied on the motor so a harmonic leakage current will flow during motor operation.
If a general purpose leakage breaker is used, the operation may malfunction due to this harmonic, so use a leakage breaker for inverters. (Refer to the Maintenance Manual BNP-B2046 for details.)
(3) A harmonic leakage current will also flow to the grounding wire between the motor and controller, and if this grounding wire is placed near the NC CRT screen, the CRT screen may malfunction due to the magnetic field of the leakage current.
Separate the grounding wire and NC CRT screen as far as possible.
(4) Noise may occur in AM radio broadcasts due to the electromagnetic wave noise generated from the motor and controller.
Separate radios and the motor and controller as far as possible.
A filter for radio noise measures is available as an option, so use one if necessary.

1.3 Model configuration

Motor

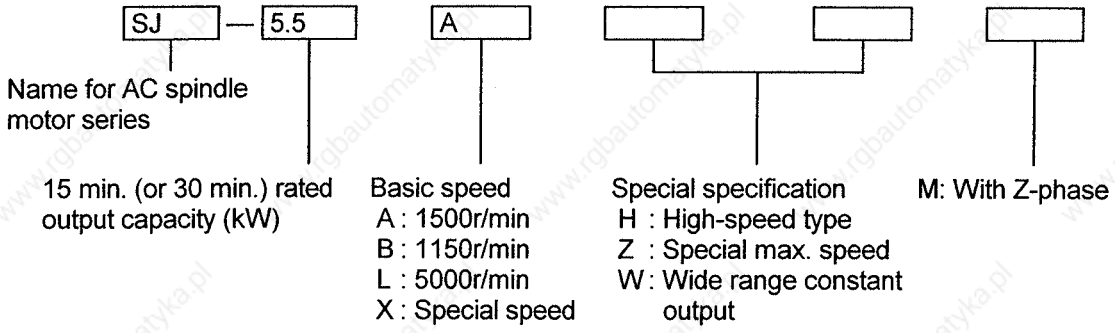

(Note) Refer to the separate Built-in Motor Standard Specifications (BFN-14118-04) for details on the built-in motor models.

Control-ler

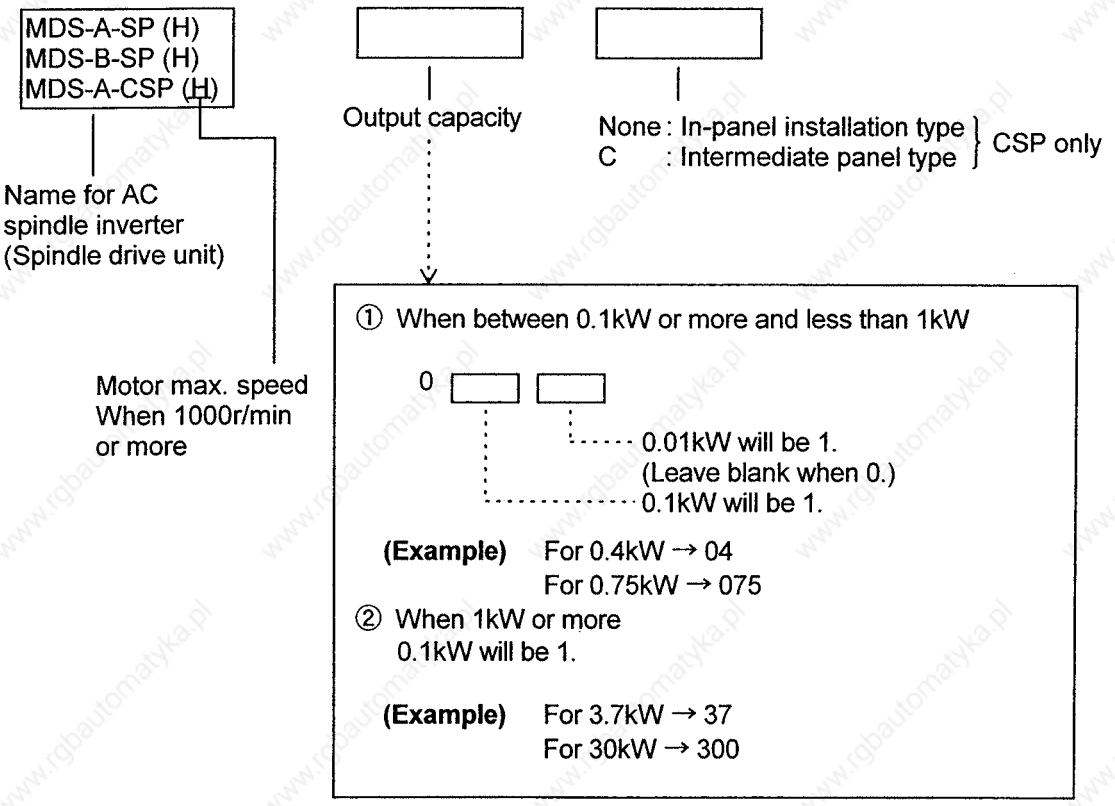

1.4 Configuration

1.4.1 Basic configuration (no added functions)

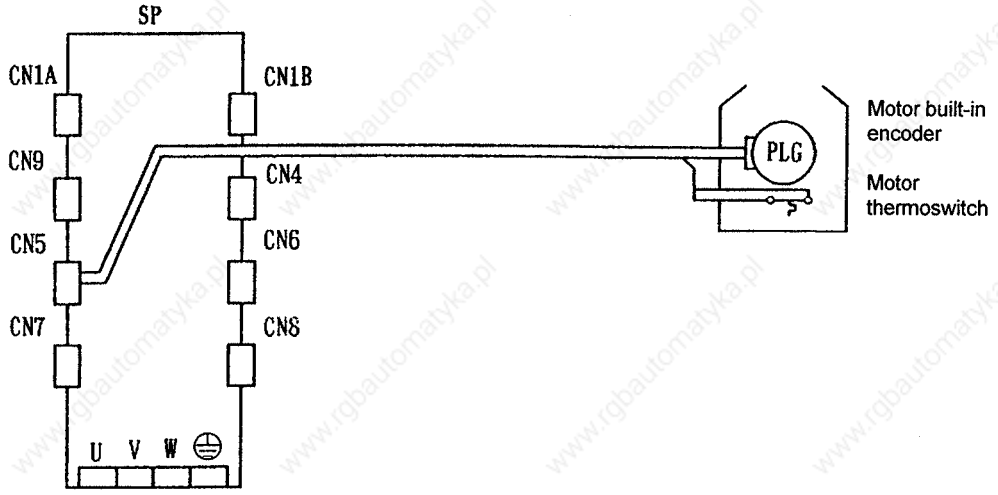

1.4.2 With orientation function

(1) Magnesensor orient (1-point) specifications

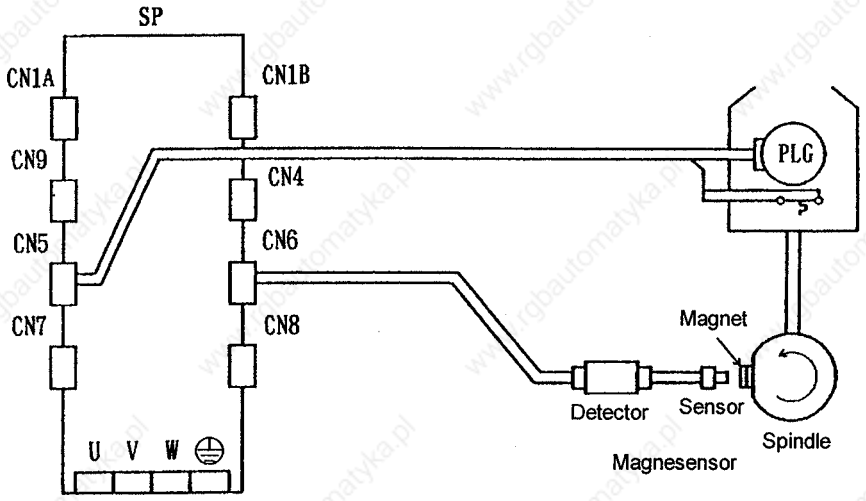

(2) Encoder orient (4096-point) specifications/with index function

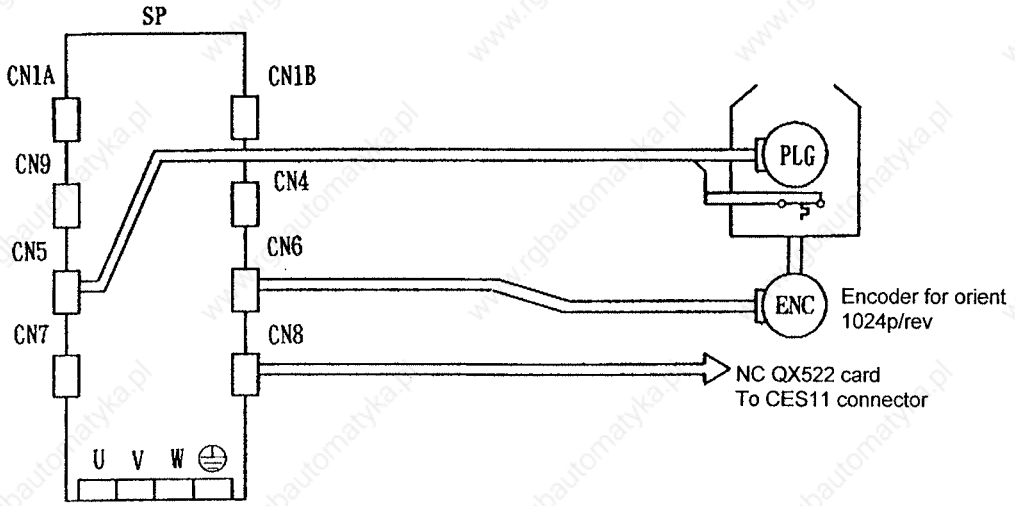

(3) Z-phase motor built-in encoder orient (4096-point) specifications/with index function

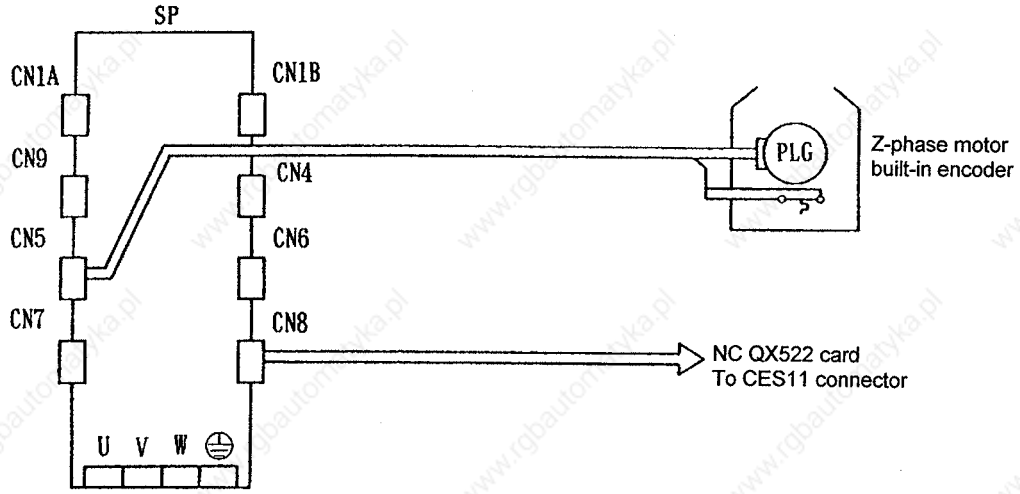

Note) Multipoint orient using the Z-phase motor built-in encoder is applicable only when spindle to motor shaft speed ratio is 1:1.

(4) Magnesensor orient (1-point) specifications + motor speed feedback output (for spindle speed indication and synchronous speed signal)

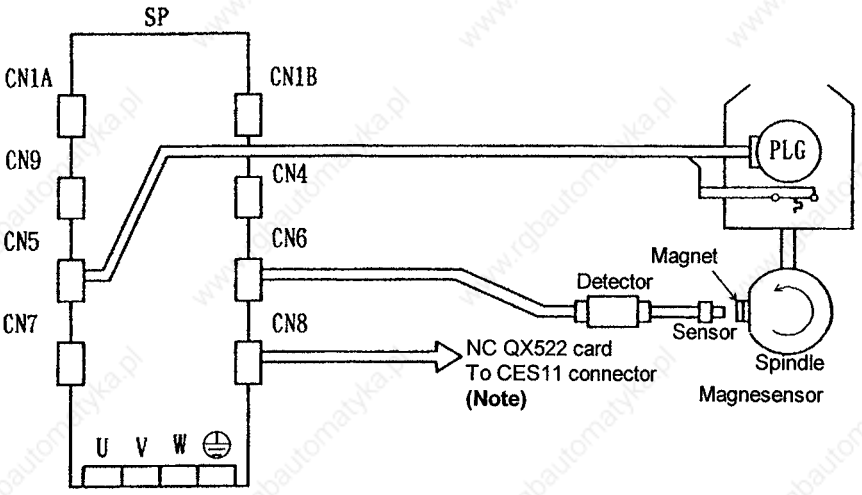

Note) The No. of pulses output to NC will differ according to the speed ratio between the spindle and motor shaft.

1.4.3 High-speed synchronous tap/spindle synchronization/with orientation function

(1) Motor built-in encoder high-speed synchronous tap/spindle synchronization and magne-sensor orient (1-point) specifications

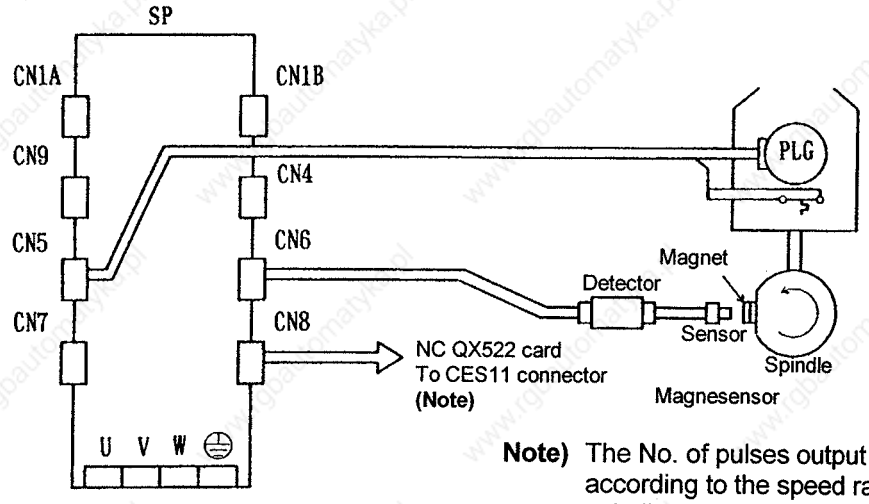

Note) The No. of pulses output to NC will differ according to the speed ratio between the spindle and motor shaft.

(2) Encoder high-speed synchronous tap/spindle synchronization and orient (4096-point) specifications/ with index function

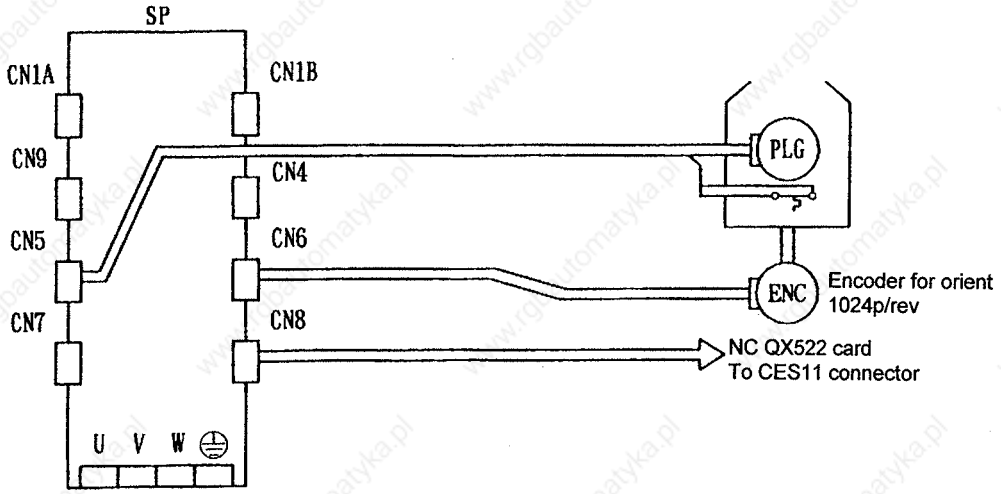

(3) Z-phase motor built-in encoder high-speed synchronous tap/spindle synchronization and orient (4096-point) specifications/with index function

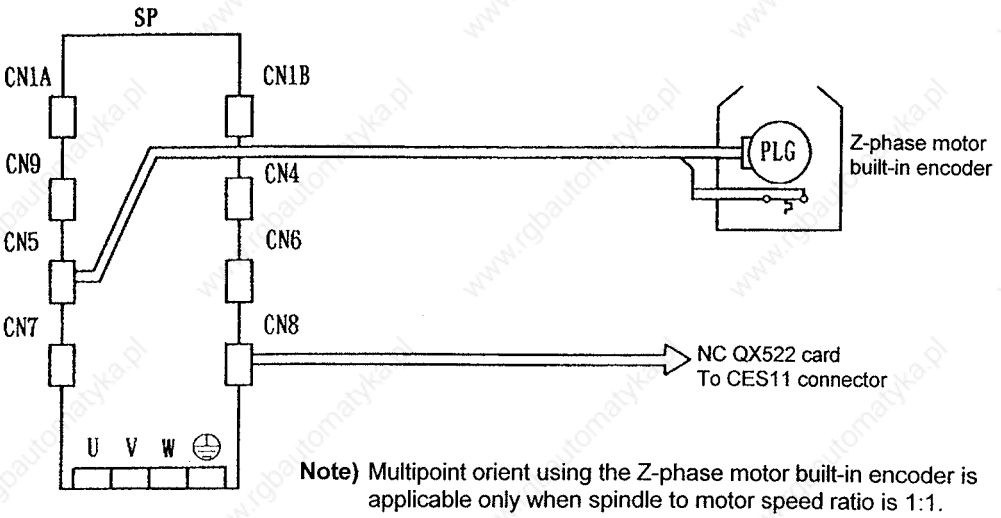

Note) Multipoint orient using the Z-phase motor built-in encoder is applicable only when spindle to motor speed ratio is 1:1.

1.4.4 OSE90K + 1024 encoder C-axis control/with orientation function

(1) OSE90K +1024 encoder C-axis control and magnesensor orient (1-point) specifications

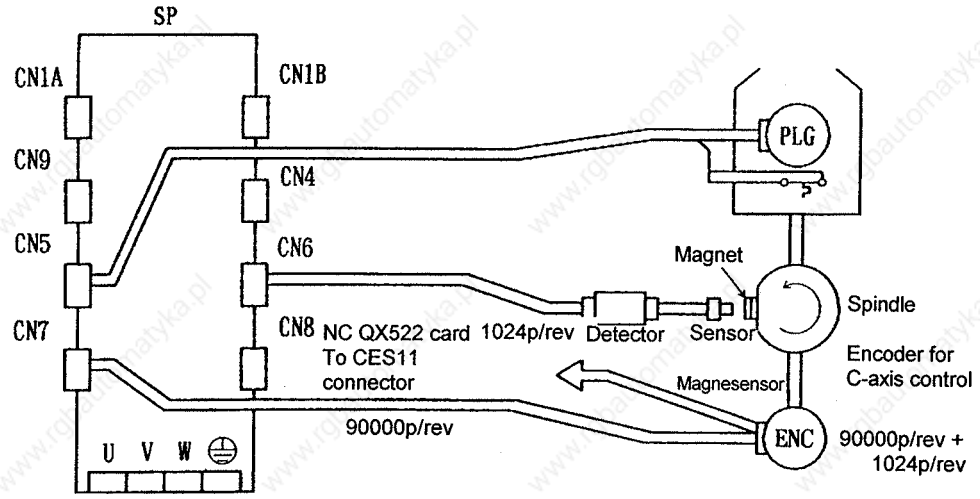

(2) OSE90K+1024 encoder C-axis control and orient (4096-point) specifications/with index function

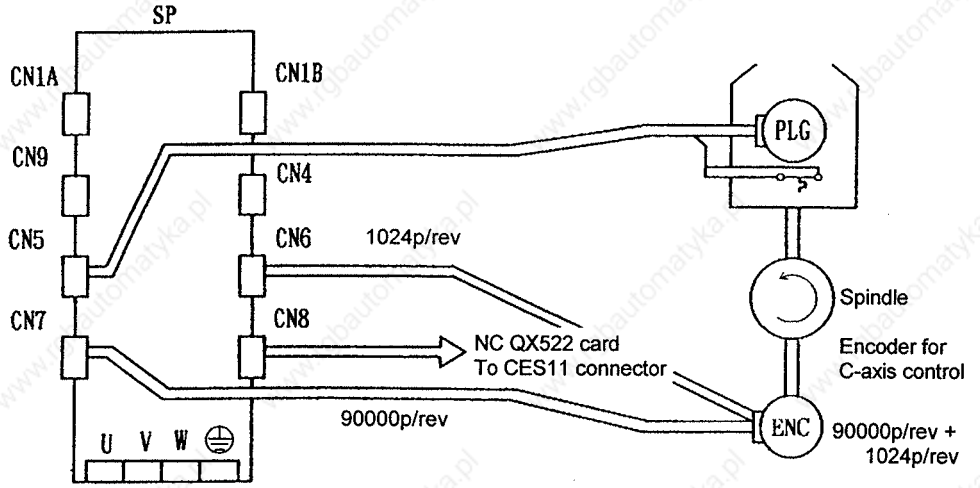

(3) OSE90K+1024 encoder C-axis control and Z-phase motor built-in encoder orient (4096-point) specifications/with index function

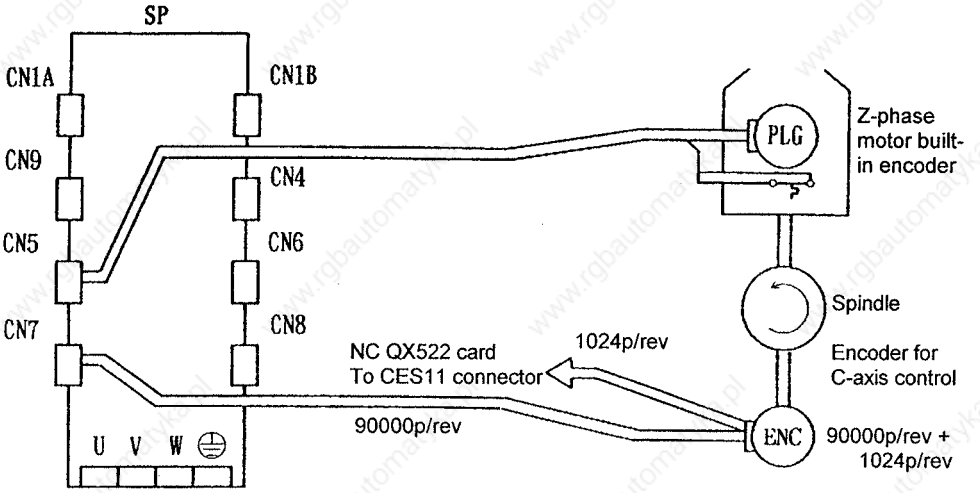

Note) Multipoint orient using the Z-phase motor built-in encoder is applicable only when spindle to motor speed ratio is 1:1.

1.4.5 OSE90K +1024 encoder C-axis control and high-speed synchronous tap/spindle synchronization/with orientation function

(1) OSE90K +1024 encoder C-axis control and high-speed synchronous tap/spindle synchronization and magnesensor orient (1-point) specifications

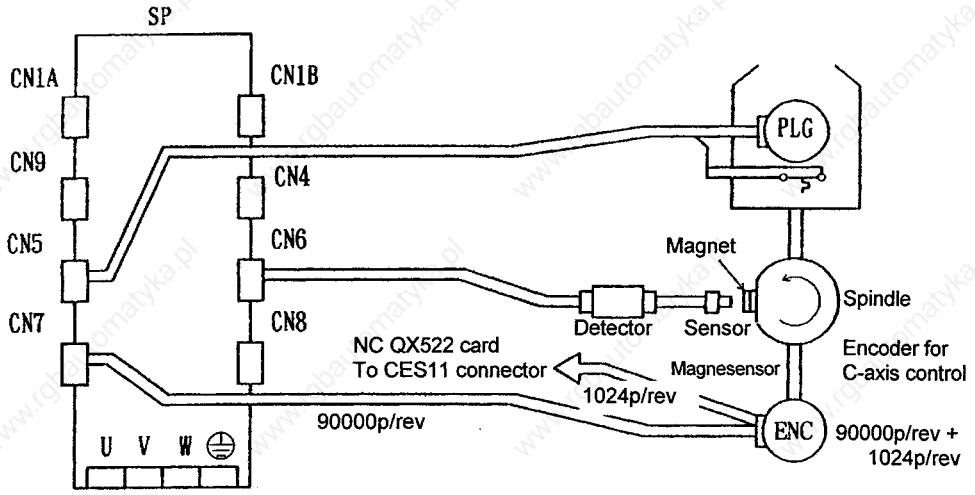

(2) OSE90K +1024 encoder C-axis control and high-speed synchronous tap/spindle synchronization and magnesensor orient (4096-point) specifications/with index function

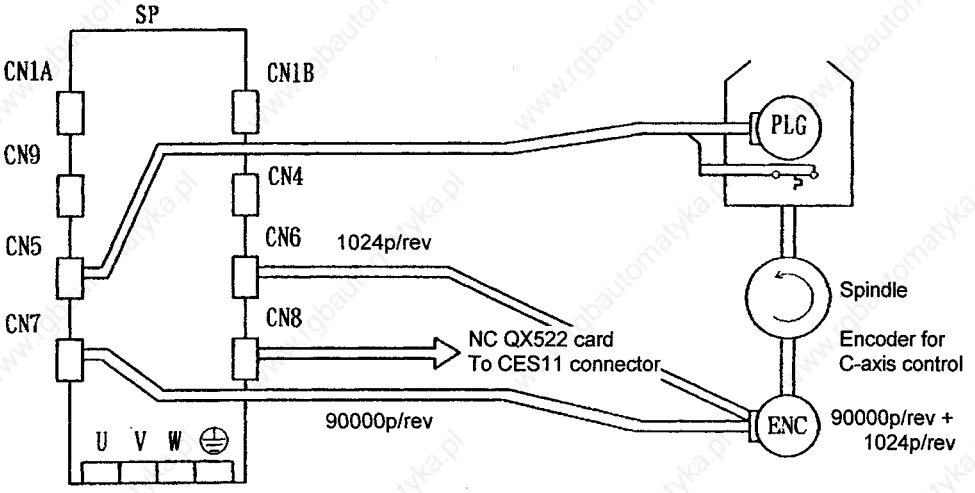

(3) OSE90K +1024 encoder C-axis control and high-speed synchronous tap/spindle synchronization and Z-phase motor built-in encoder orient (4096-point) specifications/with index function

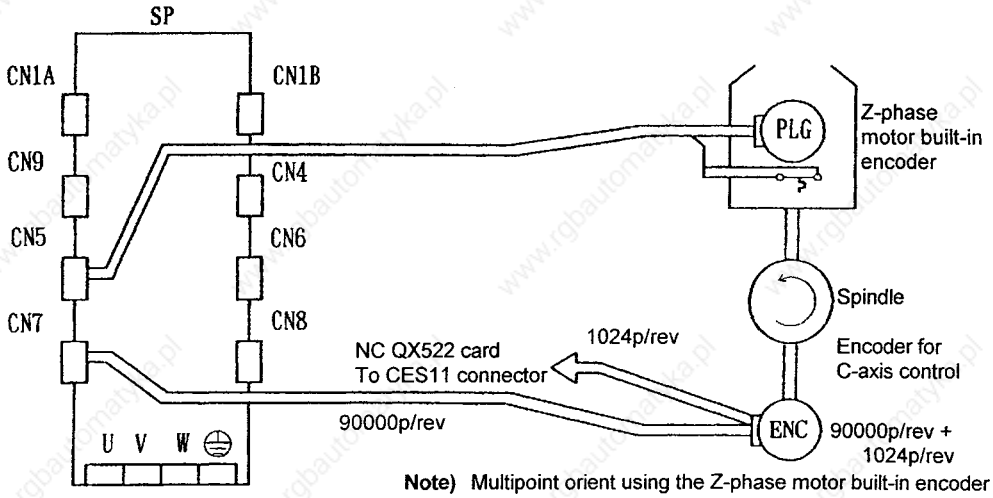

Note) Multipoint orient using the Z-phase motor built-in encoder is applicable only when spindle to motor speed ratio is 1:1.

1.4.6 MBE90K encoder C-axis control/with orientation function

(1) MBE90K encoder C-axis control and orient (4096-point) specifications/with index function

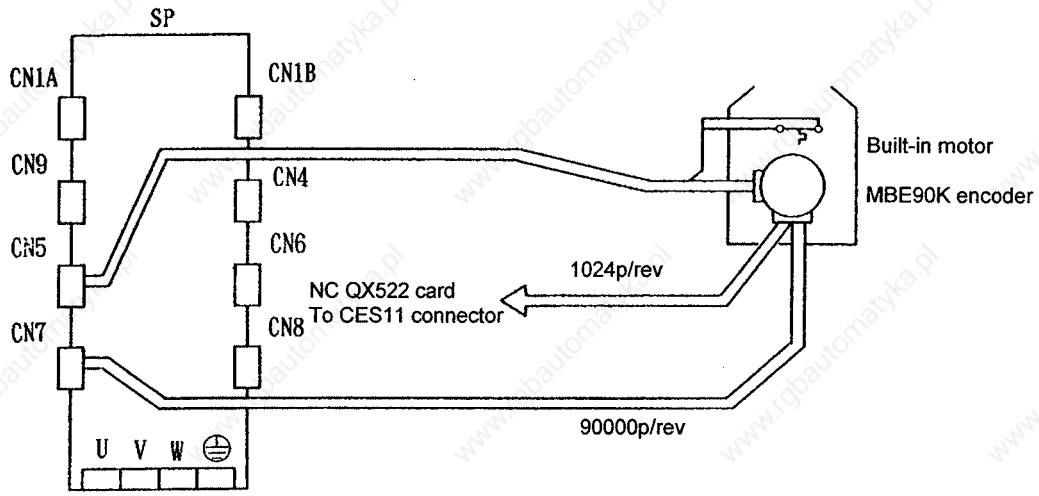

1.4.7 MBE90K encoder C-axis control and high-speed synchronous tap/ spindle synchronization/with orientation function

(1) MBE90K encoder C-axis control and high-speed synchronous tap/spindle synchronization and orient (4096-point) specifications/with index function

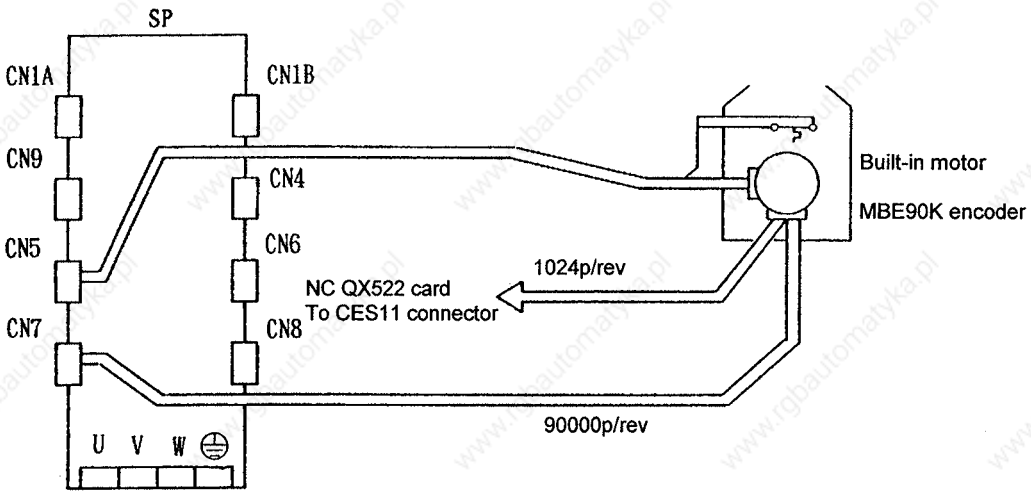

Note) Refer to the MBE90K (built-in C-axis encoder) Specifications and Instruction Manual [BNP-A2993-41] for details on the MBE90K wiring.

1.4.8 MHE90K encoder C-axis control/with orientation function

(1) MHE90K encoder C-axis control and orient (4096-point) specifications/with index function

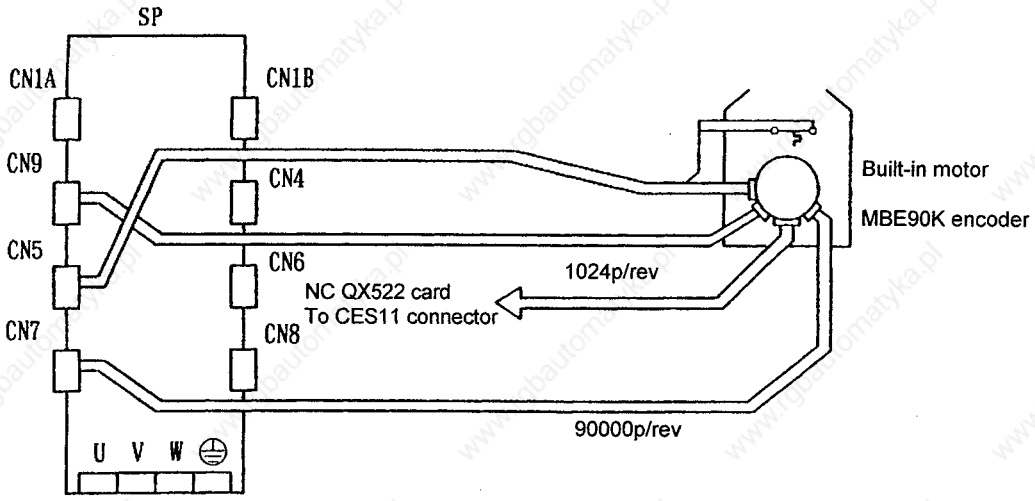

1.4.9 MHE90K encoder C-axis control and high-speed synchronous tap/ spindle synchronization/with orientation function

(1) MHE90K encoder C-axis control and high-speed synchronous tap/spindle synchronization and orient (4096-point) specifications/with index function

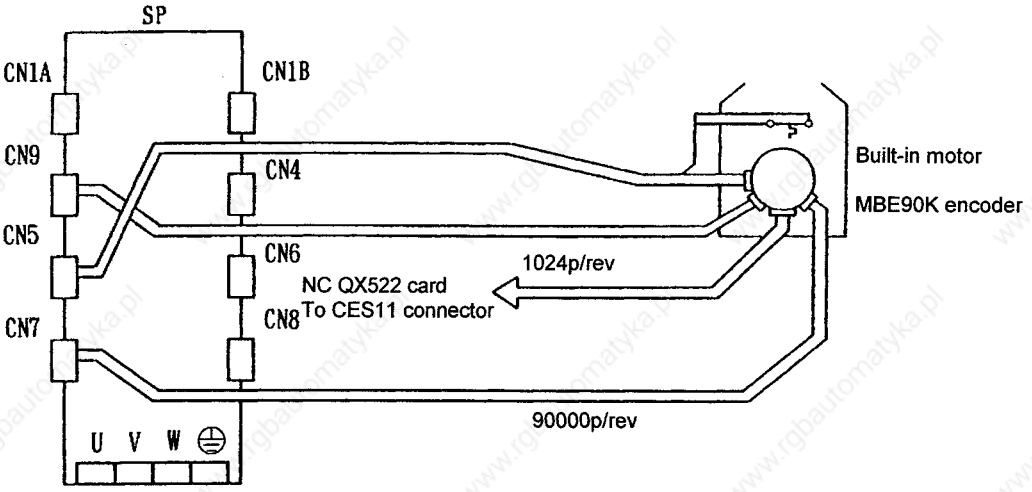

Note) Refer to the MHE90K (built-in C-axis encoder) Specifications and Instruction Manual [BNP-A2993-44] for details on the MHE90K wiring.

* The cable for outputting signals from CN8 to NC and the cable for directly connecting the detector and NC are not necessarily required for 1.4.1 to 1.4.9.
Connect only when required due to the applications. (Spindle speed indication and synchronous speed signal)

1.5 Device-to-device connections

⚠ CAUTION

Do not apply a voltage other than that specified to each terminal. Failure to observe this could lead to ruptures or trouble.

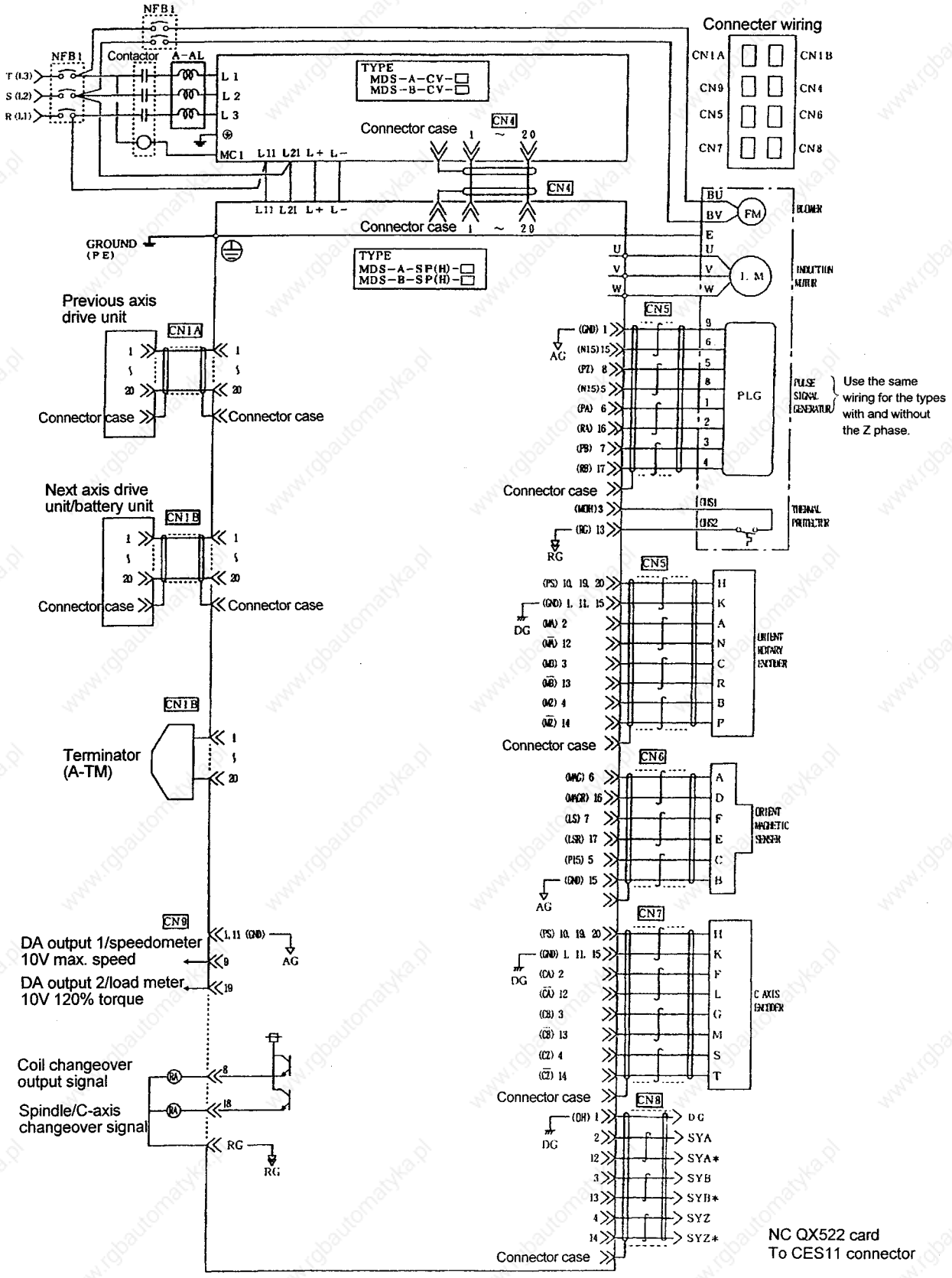

2. Specifications

2.1 AC spindle motor and controller specifications

	Item \ Series	Base speed 1500r/min series									
AC spindle motor	Model	SJ–									
		5.5A	7.5A	11AP	11A	15A	18.5A	22AP	22A	26A	30A
	Output capacity: Cont. rating (HP)/(kW)	5/3.7	7/5.5	9/7	10/7.5	15/11	20/15	20/15	25/18.5	30/22	30/22
	Output capacity: 30 min. rating (HP)/(kW) 50% ED rating r/min	7/5.5	10/7.5	15/11	15/11	20/15	20/18.5	30/22	30/22	35/26	40/30
	Speed: Basic speed [r/min]	1500									
	Speed: Max. speed [r/min]	8000			6000			4500			
	Frame No.	A112	B112		B132		C132		A160		B160
	Cont. rated torque N·m [kg·m]	23.5 (2.40)	35.0 (3.57)	44.5 (4.54)	47.7 (4.87)	70.1 (7.15)	95.5 (9.74)	95.5 (9.74)	118 (12.0)	140 (14.3)	
	GD^2 [kg·m^2]	0.08	0.10	0.12	0.17	0.21	0.27	0.32	0.55		0.69
	Weight [kg]	60	70	75	100	110	130	150	175		200
	Tolerable radial load [kg]	150	200		300						
	Cooling fan [W]	35							130		
	Vibration	V5							V10		
	Noise [dB] (A)	75							80		
	Installation	Horizontal or vertical (output shaft down)									
	Overload withstand level	120% of 30 min. rated output, 1 min.									
	Ambient temperature (°C)	0 ~ 40									
	Insulation class	F class									
	Paint color	Munsell 5.27G 2.46/0.21									
	Accessories	Pulse generator and overheat detector									
	Lubrication of bearings	Grease									
	Output characteristic	Fig. 1		Fig. 2			Fig. 3				
Controller (drive unit)	Item \ Series	SP–									
	Model	55	75	110		150	185	220		260	300
	Main circuit	IGBT IPM sinusoidal wave PWM inverter									
	Control circuit	Pulse generator speed feedback, digital closed-loop control, vector control									
	Braking	Power regenerative braking									
	Speed control range [r/min]	35 ~ 8000		35 ~ 6000			35 ~ 4500				
	Speed fluctuation rate	Max. 0.2% of maximum speed (under load varying from 10% to 100%)									
	Speed command	Serial connection with M500 Series CNC									
	Ambient temperature/humidity	0°C ~ 55°C / 90% or less (with no dew condensation)									
	Storage temperature/humidity	–15°C ~ 70°C / 90% or less (with no dew condensation)									
	Atmosphere	To be free from detrimental gas and dust (to conform with "grade C" environmental resistance specified by JEM1103)									
	Vibration	4.90m/s^2 (0.5G) or less									
	Noise	Less than 55dB									

(Note 1) The motor rated output is guaranteed with the power supply unit rated input voltage (200/220/230VAC). The rated output may not be achieved if the input voltage fluctuates and drops to 200VAC or less.

(Note 2) Contact Mitsubishi when a rated output range other than 1:8, or 1:12 is required.

(Note 3) The 50% ED rating is ON for five minutes and OFF for five minutes in the 10 minute cycle time.

	Item \ Series	Wide (1:8) rated output series					Wide (1:12) rated output series			
AC spindle motor	Model	SJ–					SJ–			
		5.5XW8	7.5XW8	11XW8	15XW8	18.5XW8	5.5XWC	7.5XWC	11XWC	15XWC
	Output capacity: Cont. rating (HP)/(kW)	5/3.7	7/5.5	10/7.5	15/11	20/15	5/3.7	7/5.5	10/7.5	15/11
	Output capacity: 30 min. rating (HP)/(kW) 50% ED rating	7/5.5	10/7.5	15/11	20/15	25/18.5	5/5.5	10/7.5	15/11	20/15
	Speed: Basic speed [r/min]	750			625		500	400		
	Speed: Max. speed [r/min]	6000			5000		6000	4800		
	Frame No.	B112	B132	C132	B160	B180	B132	A160	B180	A200
	Cont. rated torque N·m (kg·m)	47.0 (4.80)	70.0 (7.14)	95.5 (9.74)	169 (17.1)	228 (23.3)	70.5 (7.20)	131 (13.4)	179 (18.3)	262 (26.8)
	GD^2 [kg·m^2]	0.12	0.21	0.32	0.69	1.36	0.21	0.55	1.26	2.19
	Weight [kg]	75	110	150	200	300	110	175	300	390
	Tolerable radial load [kg]	200	300			400	300		400	600
	Cooling fan [W]	35			130		35	180		3ø60
	Vibration	V5			V10		V5	V10		
	Noise [dB] (A)	75			80		75	80		85
	Installation	Horizontal or vertcial (output shaft down)								
	Overload withstand level	120% of 30 min. rated output, 1 min.								
	Ambient temperature (°C)	0 ~ 40								
	Insulation class	F class								
	Paint color	Munsell 5.27G 2.46/0.21								
	Accessories	Pulse generator and overheat detector								
	Lubrication of bearings	Grease								
	Output characteristic	Fig. 4			Fig. 5		Fig. 6	Fig. 7		

	Item \ Series	SP–							
Controller (drive unit)	Model	110	220	260	300	110	150	260	300
	Main circuit	IGBT IPM sinusoidal wave PWM inverter							
	Control circuit	Pulse generator speed feedback, digital closed-loop control, vector control							
	Braking	Power regenerative braking							
	Speed control range [r/min]	35 ~ 6000		35 ~ 5000		35~6000	35 ~ 4800		
	Speed fluctuation rate	Max. 0.2% of maximum speed (under load varying from 10% to 100%)							
	Speed command	Serial connection with M500 Series CNC							
	Ambient temperature/ humidity	0°C ~ 55°C / 90% or less (with no dew condensation)							
	Storage temperature/humidity	–15°C ~ 70°C / 90% or less (with no dew condensation)							
	Atmosphere	To be free from detrimental gas and dust (to conform with "grade C" environmental resistance specified by JEM1103)							
	Vibration	4.90m/s^2 (0.5G) or less							
	Noise	Less than 55dB							

(Note 1) The motor rated output is guaranteed with the power supply unit rated input voltage (200/220/230VAC). The rated output may not be achieved if the input voltage fluctuates and drops to 200VAC or less.

(Note 2) Contact Mitsubishi when a rated output range other than 1:8, or 1:12 is required.

(Note 3) The 50% ED rating is ON for five minutes and OFF for five minutes in the 10 minute cycle time.

	Item \ Series		High-speed series					
AC spindle motor	Model		SJ–					
			5.5AZ	7.5AZ	5.5LH	7.5LH	11LH	15LH
	Output capacity	Cont. rating (HP)/(kW)	5/3.7	7/5.5	5/3.7	7/5.5	10/7.5	15/11
		30 min. rating (HP)/(kW) 50% ED rating	7/5.5	10/7.5	7/5.5	10/7.5	15/11	20/15
	Speed	Basic speed [r/min]	1500		5000		5000	
		Max. speed [r/min]	10000		20000		15000	
	Frame No.		A112	B112	A100	B100	B132	C132
	Cont. rated torque	N·m (kg·m)	23.5 (2.4)	35.0 (3.57)	7.06 (0.72)	1.05 (1.07)	14.3 (1.46)	21.0 (2.14)
	GD^2	[kg·m^2]	0.08	0.10	0.02	0.025	0.07	0.095
	Weight	[kg]	60	70	60	65	95	115
	Tolerable radial load	[kg]	140		5			
	Cooling fan	[W]	35					
	Vibration		V5					
	Noise	[dB] (A)	75		85			
	Installation		Horizontal or vertcial (output shaft down)					
	Overload withstand level		120% of 30 min. rated output, 1 min.					
	Ambient temperature	(°C)	0 ~ 40					
	Insulation class		F class					
	Paint color		Munsell 5.27G 2.46/0.21					
	Accessories		Pulse generator and overheat detector					
	Lubrication of bearings		Grease		Oil air lubrication			
	Output characteristic		Fig. 8		Fig. 9		Fig. 10	
Controller (drive unit)	Item \ Series		SP/SPH–					
	Model		55	75		110		150
	Main circuit		IGBT IPM sinusoidal wave PWM inverter					
	Control circuit		Pulse generator speed feedback, digital closed-loop control, vector control					
	Braking		Power regenerative braking					
	Speed control range	[r/min]	35 ~ 10000		35 ~ 20000		35 ~ 15000	
	Speed fluctuation rate		Max. 0.2% of maximum speed (under load varying from 10% to 100%)					
	Speed command		Serial connection with M500 Series CNC					
	Ambient temperature/ humidity		0°C ~ 55°C / 90% or less (with no dew condensation)					
	Storage temperature/humidity		–15°C ~ 70°C / 90% or less (with no dew condensation)					
	Atmosphere		To be free from detrimental gas and dust (to conform with "grade C" environmental resistance specified by JEM1103)					
	Vibration		4.90m/s^2 (0.5G) or less					
	Noise		Less than 55dB					

(Note 1) The motor rated output is guaranteed with the power supply unit rated input voltage (200/220/230VAC). The rated output may not be achieved if the input voltage fluctuates and drops to 200VAC or less.
(Note 2) Contact Mitsubishi when a rated output range other than 1:8, or 1:12 is required.
(Note 3) The 50% ED rating is ON for five minutes and OFF for five minutes in the 10 minute cycle time.

	Item \ Series		SJ-N series							
AC spindle motor	Model		SJ-N							
			0.75A	1.5A	2.2X	2.2A	3.7A	5.5AP	5.5A	7.5A
	Output capacity: Cont. rating	kW (HP)	0.4 (0.5)	0.75 (1.0)	1.5 (2.0)	1.5 (2.0)	2.2 (3.0)	3.0 (4.0)	3.7 (5.0)	5.5 (7.4)
	Output capacity: 30 min. rating	kW (HP)	0.75 (1.0)	1.5 (2.0)	2.2 (3.0)	2.2 (3.0)	3.7 (5.0)	5.5 (7.4)	5.5 (7.4)	7.5 (10.1)
	Output capacity: 50% ED rating		10 min	10 min	15 min	15 min	15 min	15 min	30 min	30 min
	Speed: Basic speed	[r/min]	1500		3000	1500				
	Speed: Max. speed	[r/min]	10000						8000	
	Frame No.		B71	C71	C71	A90	B90	C90	A112	B112
	Cont. rated torque	N·m (kg·m)	2.55 (0.26)	4.70 (0.48)	3.53 (0.36)	9.51 (0.97)	14.0 (1.43)	23.5 (2.4)	23.5 (2.4)	35.0 (3.57)
	GD^2	[kg·m^2]	0.0045	0.0086	0.0086	0.017	0.021	0.045	0.058	0.071
	Weight	[kg]	15	20	20	33	37	45	63	74
	Tolerable radial load	[kg]	50			100			150	200
	Cooling fan	[W]	20			40		55	35	
	Vibration		V5							
	Noise	[dB] (A)	75							
	Installation		Horizontal or vertcial (output shaft down)							
	Overload withstand level		120% of 30 min. rated output, 1 min.							
	Ambient temperature	(°C)	0 ~ 40							
	Insulation class		F class							
	Paint color		Munsell 5.27G 2.46/0.21							
	Accessories		Pulse generator and heat detector							
	Lubrication of bearings		Grease							
	Output characteristic		Fig. 11							

	Item \ Series		SP–					
Controller (drive unit)	Model		075	15	22	37	55	75
	Main circuit		IGBT IPM sinusoidal wave PWM inverter					
	Control circuit		Pulse generator speed feedback, digital closed-loop control, vector control					
	Braking		Regenerative braking (resistance discharged)					
	Speed control range	[r/min]	35 ~ 10000				35 ~ 8000	
	Speed fluctuation rate		Max. 0.2% of maximum speed (under load varying from 10% to 100%)					
	Speed command		Serial connection with M500 Series CNC					
	Ambient temperature/ humidity		0°C ~ 55°C / 90% or less (with no dew condensation)					
	Storage temperature/humidity		–15°C ~ 70°C / 90% or less (with no dew condensation)					
	Atmosphere		To be free from detrimental gas and dust (to conform with "grade C" environmental resistance specified by JEM1103)					
	Vibration		4.90m/s^2 (0.5G) or less					
	Noise		Less than 55dB					

(Note 1) The motor rated output is guaranteed with the power supply unit rated input voltage (200/220/230VAC). The rated output may not be achieved if the input voltage fluctuates and drops to 200VAC or less.

(Note 2) For speeds faster than 6000min^{-1}, the speed will be the reduced output calculated with rated output $\times \frac{6000}{\text{speed}}$.

(Note 3) The 50% ED rating is ON for five minutes and OFF for five minutes in the 10 minute cycle time.

2.2 Output characteristics

Standard

Fig. 1

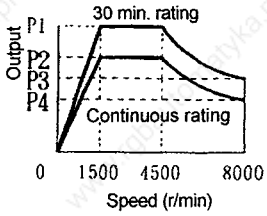

Output P1/P2/P3/P4	
SJ-5.5A	SJ-7.5A
5.5/3.7/3/2 (kW)	7.5/5.5/4/3 (kW)
7/5/4/2.5 (HP)	10/7/5/4 (HP)

Fig. 2

Output P1/P2/P3/P4			
SJ-11AP	SJ-11A	SJ-15A	SJ-18.5A
11/7/8.5 (kW)	11/7.5/8/5.5 (kW)	15/11/11/8 (kW)	18.5/15/13.5/11 (kW)
15/9/10/7 (HP)	15/10/10/7 (HP)	20/15/15/10 (HP)	25/20/18/15 (HP)

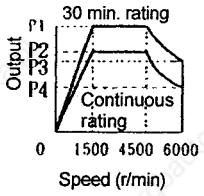

Fig. 3

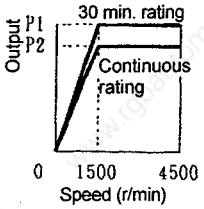

Output P1/P2			
SJ-22AP	SJ-22A	SJ-26A	SJ-30A
22/15 (kW)	22/18.5 (kW)	26/22 (kW)	30/22 (kW)
30/20 (HP)	30/25 (HP)	25/30 (HP)	40/30 (HP)

Wide rated output

Fig. 4

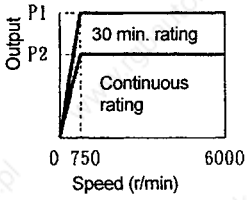

Output P1/P2		
SJ-5.5XWB	SJ-7.5XWB	SJ-11XWB
5.5/3.7 (kW)	7.5/5.5 (kW)	11/7.5 (kW)
7/5 (HP)	10/7 (HP)	15/10 (HP)

Fig. 5

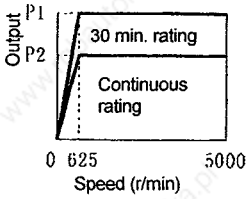

Output P1/P2	
SJ-15XWB	SJ-18.5XWB
15/11 (kW)	18.5/15 (kW)
20/15 (HP)	25/20 (HP)

Fig. 6

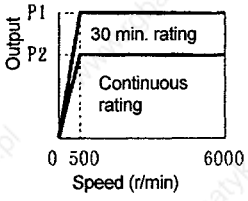

Output P1/P2
SJ-5.5XWC
5.5/3.7 (kW)
7/5 (HP)

Fig. 7

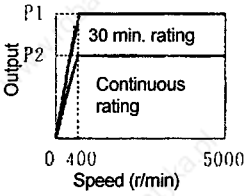

Output P1/P2		
SJ-7.5XWC	SJ-11XWC	SJ-15XWC
7.5/5.5 (kW)	11/7.5 (kW)	15/11 (kW)
10/7 (HP)	15/10 (HP)	20/15 (HP)

High-speed

Fig. 8

Output P1/P2/P3/P4	
SJ-5.5AZ	SJ-7.5AZ
5.5/3.7/2.4/1.6 (kW)	7.5/5.5/3/2 (kW)
7/5/3.2/2.4 (HP)	10/7/4/2.6 (HP)

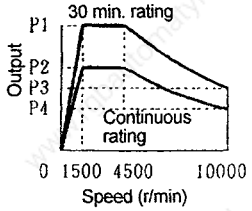

Fig. 9

Output P1/P2	
SJ-5.5LH	SJ-7.5LH
5.5/3.7 (kW)	7.5/5.5 (kW)
7/5 (HP)	10/7 (HP)

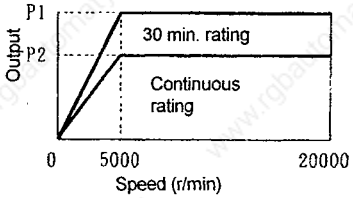

Fig. 10

Output P1/P2	
SJ-11LH	SJ-15LH
11/7.5 (kw)	15/11 (kW)
15/10 (HP)	20/15 (HP)

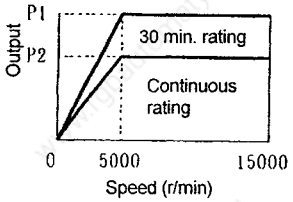

Fig.11

SJ-N0.75A

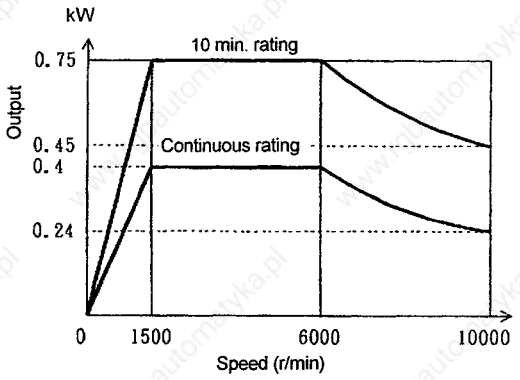

SJ-N1.5A

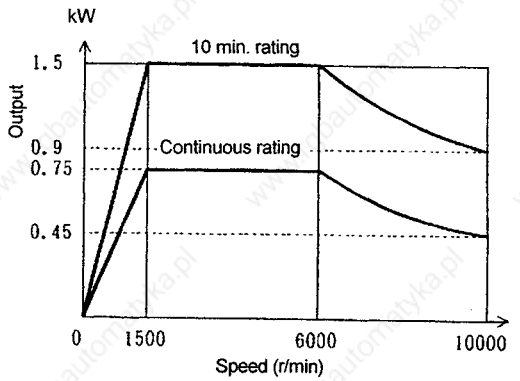

SJ-N2.2X

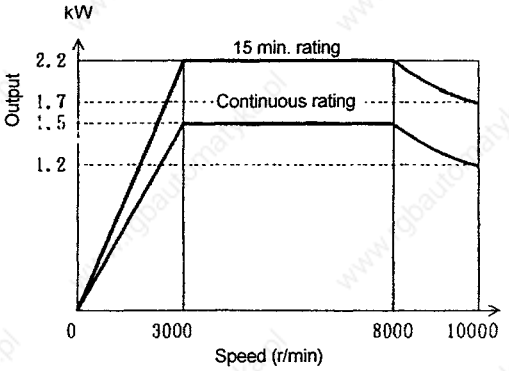

SJ-N2.2A

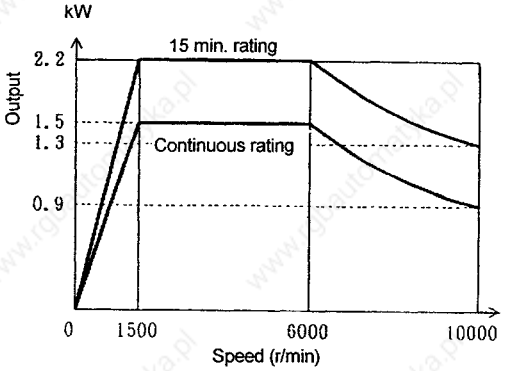

SJ-N3.7A

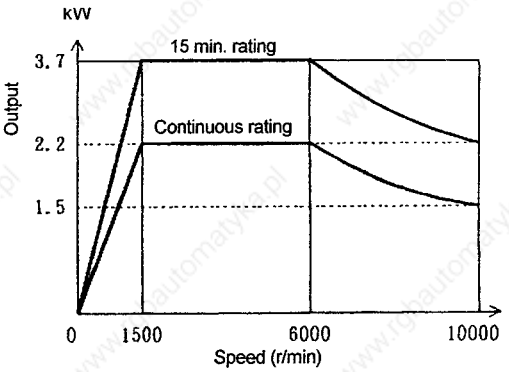

SJ-N5.5AP

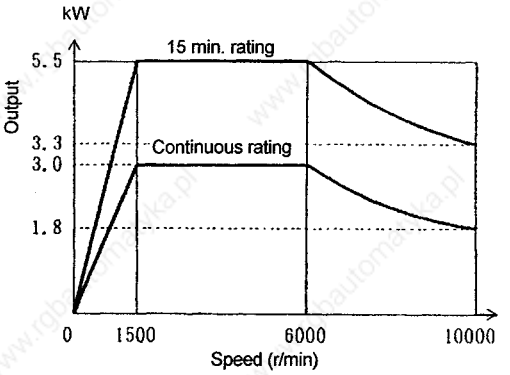

SJ-N5.5A

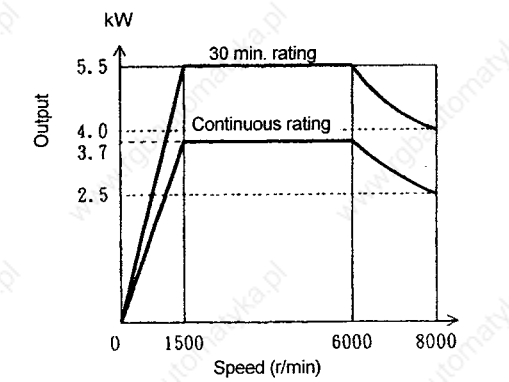

SJ-N7.5A

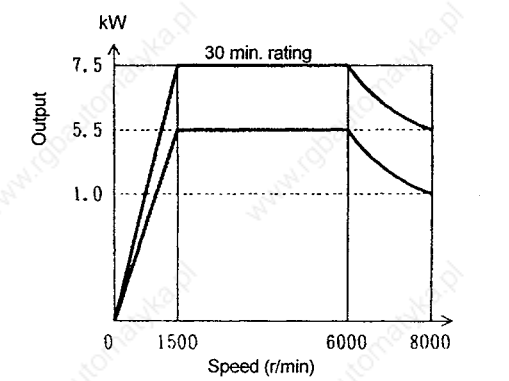

2.3 Outline dimension drawings

2.3.1 Motor

Standard flange type 112 to 200 frame

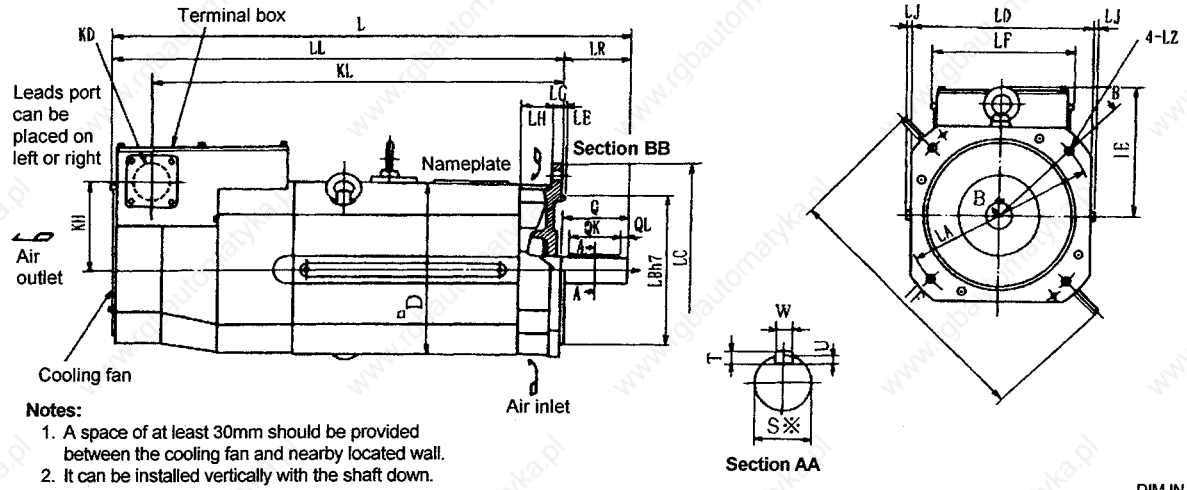

Notes:
1. A space of at least 30mm should be provided between the cooling fan and nearby located wall.
2. It can be installed vertically with the shaft down.

DIM IN mm

Frame No.	Motor																	Shaft end								
	D	L	IE	KD	KL	KH	LA	LB	LC	LD	LE	LF	LG	LH	LJ	LL	LZ	IF	LR	Q	QK	S	T	U	W	QL	※
A112F	208	549	152	44	438	102	215	180	250	204	5	164	13	52	7	489	15	317	60	60	45	28	7	4	7	7.5	h6
B112F	208	614	152	44	483	102	215	180	250	204	5	164	13	52	7	534	15	317	80	80	63	32	8	5	10	8	h6
B132F	254	677	180	44	516	117	265	230	300	250	5	164	20	55	7	567	15	376	110	110	80	48	9	5.5	14	10	h6
C132F	254	742	180	44	581	117	265	230	300	250	5	164	20	55	7	632	15	376	110	110	80	48	9	5.5	14	10	h6
A160F	314	785	206	51	600.5	133	300	250	350	310	5	189	20	60	7	675	19	438	110	110	90	55	10	6	16	10.5	m6
B160F	314	850	206	51	665.5	133	300	250	350	310	5	189	20	60	7	740	19	438	110	110	90	55	10	6	16	10.5	m6
B180F	354	909	238	51	701.5	160	350	300	400	350	5	224	25	68	7	769	19	509	140	140	110	60	11	7	18	15	m6
A200F	380	932	272	63	733	202	400	350	450	378	5	278	30	73	7	792	19	581	140	140	110	60	11	7	18	15	m6

Standard leg installation type 112 to 200 frame

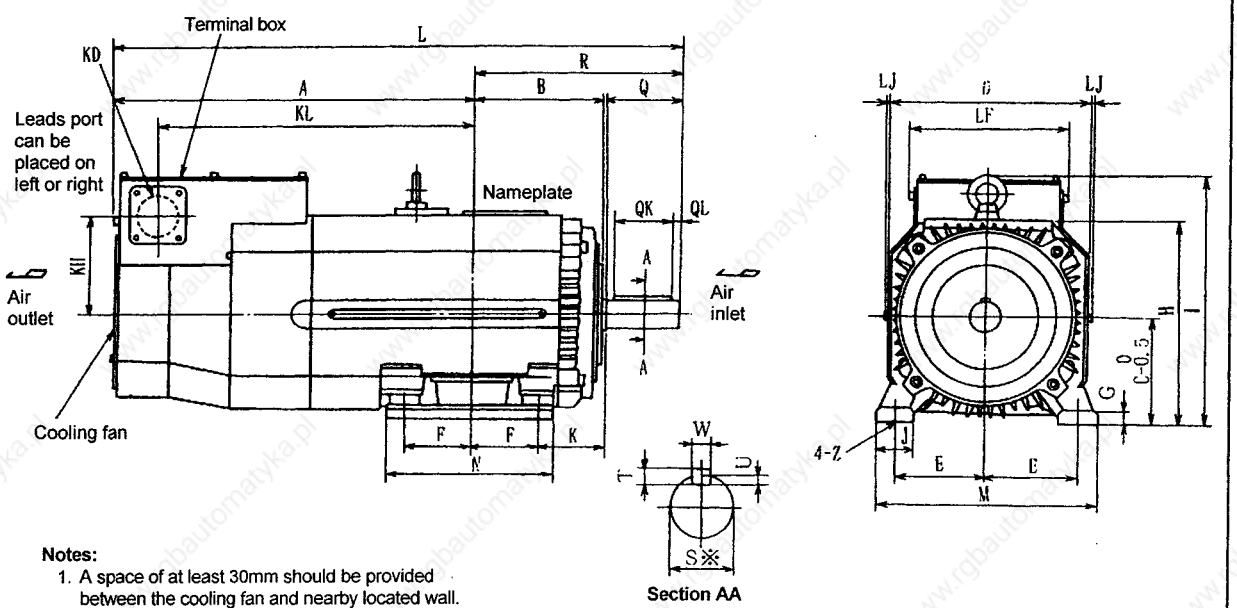

Notes:
1. A space of at least 30mm should be provided between the cooling fan and nearby located wall.

DIM IN mm

Frame No.	Motor																			Shaft end								
	A	B	C	D	E	F	G	H	I	J	K	KD	KL	KH	LF	LJ	L	M	N	Z	Q	QK	R	S	T	U	W	QL	※
A112M	349	135	112	206	95	70	15	215	264	40	70	44	298	102	164	6	549	230	180	12	60	45	200	28	7	4	7	7.5	h6
B112M	394	135	112	206	95	70	15	215	264	40	70	44	343	102	164	6	614	230	180	12	80	63	220	32	8	5	10	8	h6
B132M	389	173	132	252	108	89	17	258	312	45	89	44	338	117	164	6	677	260	218	12	110	80	288	48	9	5.5	14	10	h6
C132L	441.5	185.5	132	252	108	101.5	17	258	312	45	89	44	390.5	117	164	6	742	260	243	12	110	80	300.5	48	9	5.5	14	10	h6
A160L	440	230	160	312	127	127	20	316	366	55	108	51	365.5	133	189	6	785	310	304	15	110	90	345	55	10	6	16	10.5	m6
B160L	505	230	160	312	127	127	20	316	366	55	108	51	430.5	133	189	6	850	310	304	15	110	90	345	55	10	6	16	10.5	m6
B180L	508.5	247.5	180	352	139.5	139.5	22	356	418	70	121	51	441	160	224	6	909	350	338	19	140	110	400.5	60	11	7	18	15	m6
A200L	506.5	272.5	200	380	159	152.5	25	390	472	85	133	63	447.5	202	278	6	932	400	385	19	140	110	425.5	60	11	7	18	15	m6

Thin leg installation type

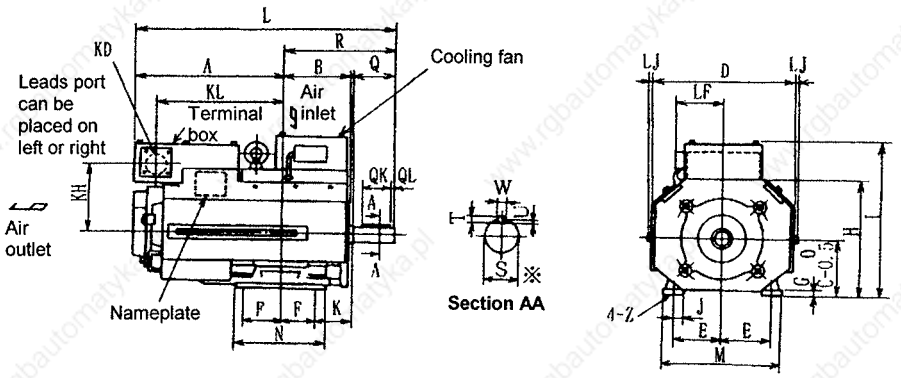

Notes:

1. A space of at least 30mm should be provided between the cooling fan and nearby located wall.

DIM IN mm

Frame No.	Motor																			Shaft end								
	A	B	C	D	E	F	G	H	I	J	K	KD	KL	KH	LF	LJ	L	M	N	Z	Q	QK	R	S	T	U	W	QL	※
B132MU	312	173	132	320	108	89	17	304	371	45	89	44	262	170	95	6	600	260	218	12	110	80	288	48	9	5.5	14	10	h6
C132LU	364.5	185.5	132	320	108	101.5	17	304	371	45	89	44	314.5	170	95	6	665	260	243	12	110	80	300.5	48	9	5.5	14	10	h6
A160LU	322	230	160	356	127	127	20	348	446	55	108	51	272	195	118	6	667	310	304	15	110	90	345	55	10	6	16	10.5	m6
B160LU	387	230	160	356	127	127	20	348	446	55	108	51	337	195	118	6	732	310	304	15	110	90	345	55	10	6	16	10.5	m6
B180LU	399.5	255.5	180	400	139.5	139.5	22	397	495	70	121	51	349.5	222	118	6	800	350	338	19	140	110	400.5	60	11	7	18	15	m6

High-speed 1000rpm

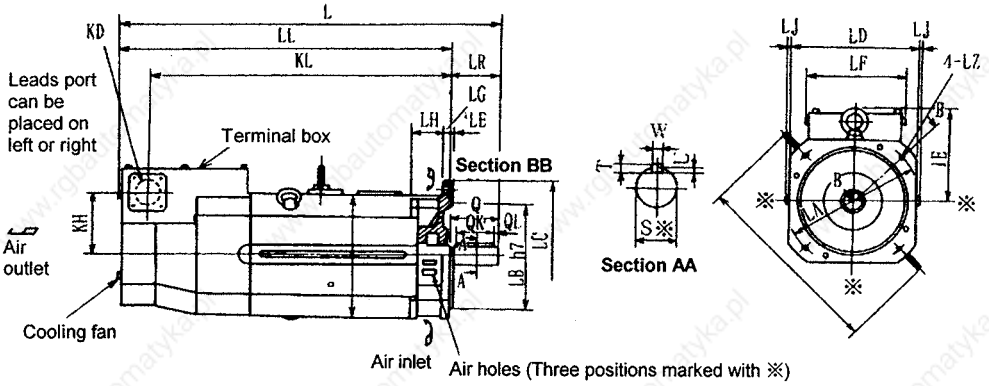

Notes:

1. A space of at least 30mm should be provided between the cooling fan and nearby located wall.
2. It can be installed vertically with the shaft down.
3. When horizontal installation of the shaft is used, install so that the air holes face the left, right and bottom sides.

DIM IN mm

Frame No.	Motor																	Shaft end								
	D	L	IE	KD	KL	KH	LA	LB	LC	LD	LE	LF	LG	LH	LJ	LL	LZ	IF	LR	Q	QK	S	T	U	W	QL	※
A112F	208	549	152	44	438	102	215	180	250	204	5	164	13	52	7	489	15	317	60	60	45	28	7	4	7	7.5	h6
B112F	208	549	152	44	483	102	215	180	250	204	5	164	13	52	7	534	15	317	60	60	45	28	7	4	7	7.5	h6

High-speed 15000/20000rpm

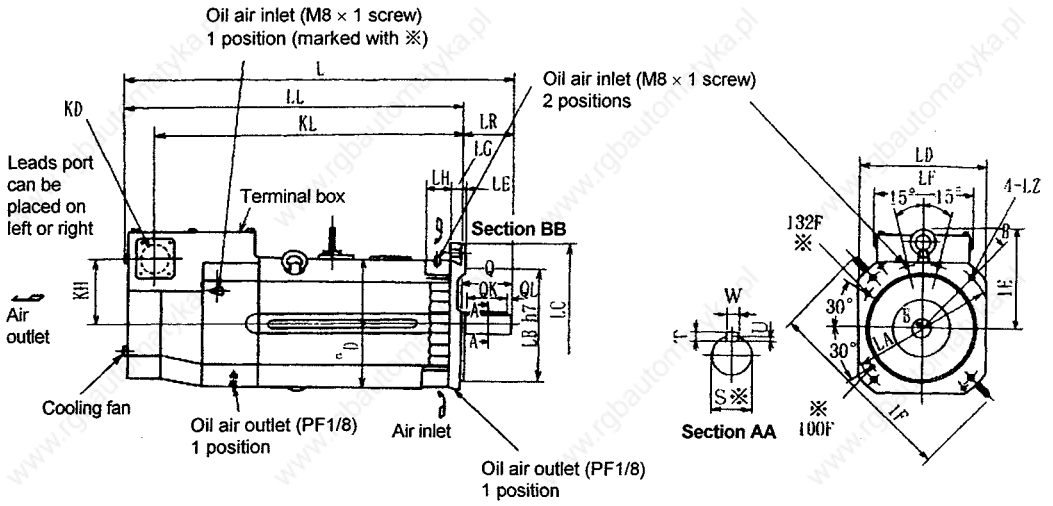

Notes:

1. A space of at least 30mm should be provided between the cooling fan and nearby located wall.
2. When horizontal installation of the shaft is used, install so that the oil air outlets face the bottom side.

DIM IN mm

Frame No.	Motor																	Shaft end								
	D	L	IE	KD	KL	KH	LA	LB	LC	LD	LE	LF	LG	LH	LL	LZ	IF	LR	Q	QK	S	T	U	W	QL	※
A100F	208	549	152	44	418	102	265	230	300	250	5	164	25	60	469	19	317	80	80	63	32	8	5	10	8	h6
B100F	208	574	152	44	443	102	265	230	300	250	5	164	25	60	494	19	317	80	80	63	32	8	5	10	8	h6
B132F	254	606	180	44	475	117	265	230	300	250	5	164	25	60	526	19	376	80	80	63	32	8	5	10	8	h6
C132F	254	626	180	44	495	117	300	250	350	300	5	164	25	60	546	24	376	80	80	63	32	8	5	10	8	h6

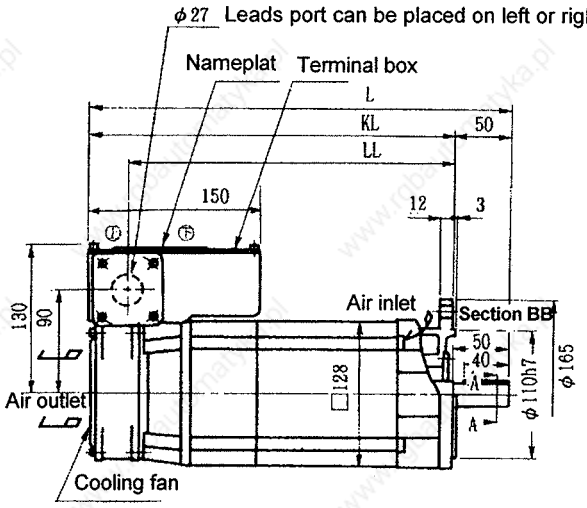

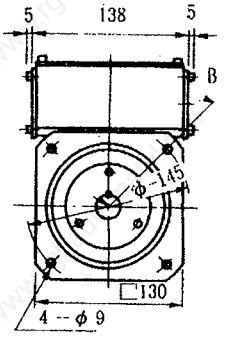

- A space of at least 30mm should be provided between the cooling fan and nearby located wall.
- It can be installed vertically with the shaft down.

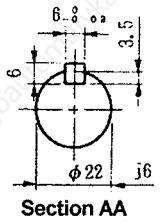

Section AA

Frame No.	Motor		
	L	KL	LL
B71F	308.5	223.5	258.5
C71F	368.5	283.5	318.5

DIM IN mm

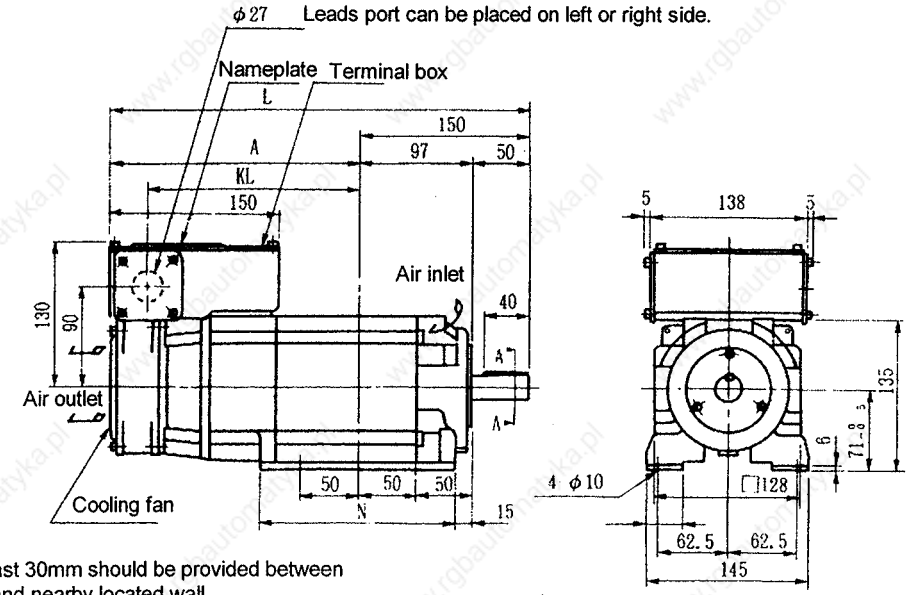

- A space of at least 30mm should be provided between the cooling fan and nearby located wall.

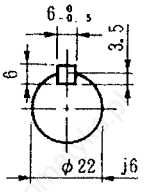

Section AA

Frame No.	Motor			
	A	KL	L	N
B71	158.5	123.5	308.5	150
C71	218.5	183.5	368.5	170

DIM IN mm

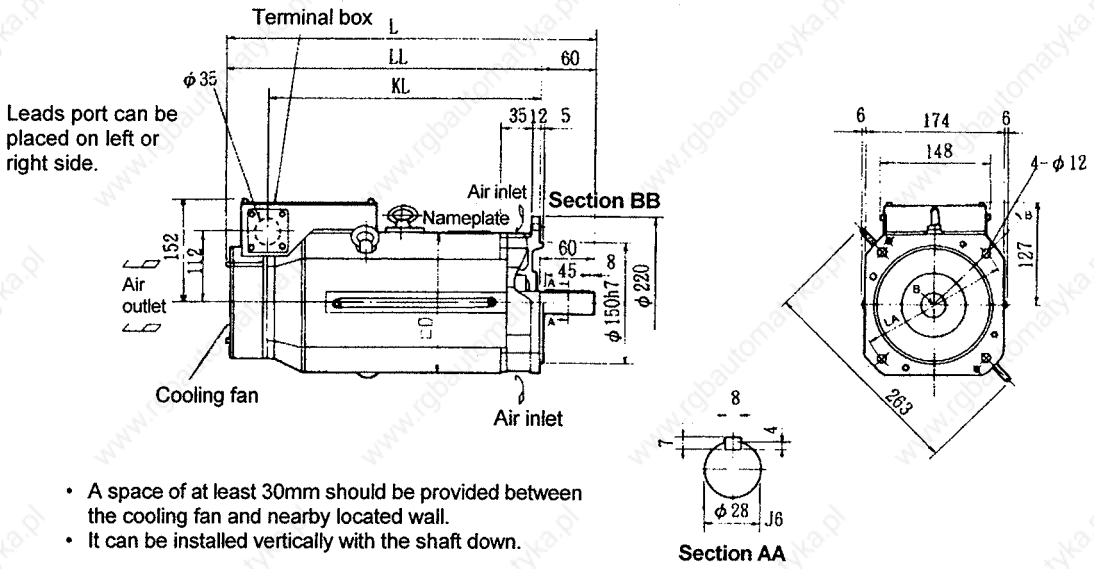

- A space of at least 30mm should be provided between the cooling fan and nearby located wall.
- It can be installed vertically with the shaft down.

Frame No.	Motor		
	L	KL	LL
A90F	401	290	341
B90F	431	320	371

DIM IN mm

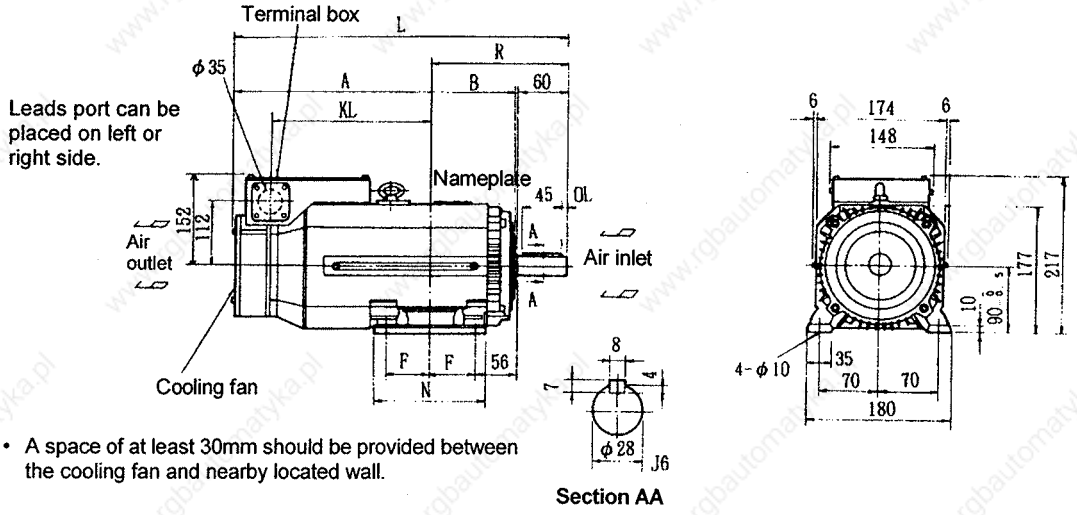

- A space of at least 30mm should be provided between the cooling fan and nearby located wall.

Frame No.	Motor						Shaft end
	A	B	F	KL	L	N	R
A90S	235	101	50	184	401	130	166
B90L	252.5	113.5	62.5	201.5	431	155	178.5

DIM IN mm

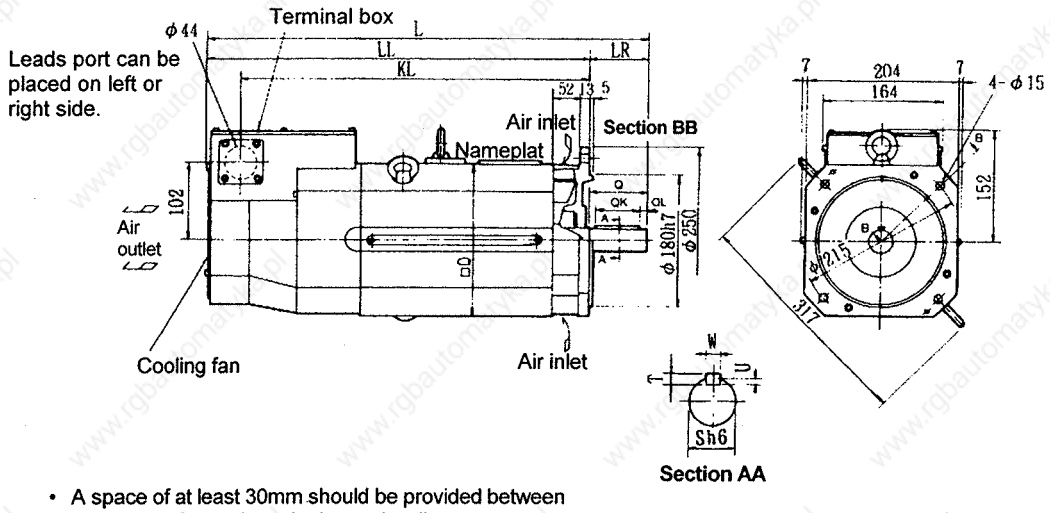

- A space of at least 30mm should be provided between the cooling fan and nearby located wall.
- It can be installed vertically with the shaft down.

Frame No.	Motor			Shaft end							
	L	KL	LL	LR	Q	QK	S	T	U	W	QL
A112F	549	438	489	60	60	45	28	7	4	7	7.5
B112F	614	483	534	80	80	63	32	8	5	10	8

DIM IN mm

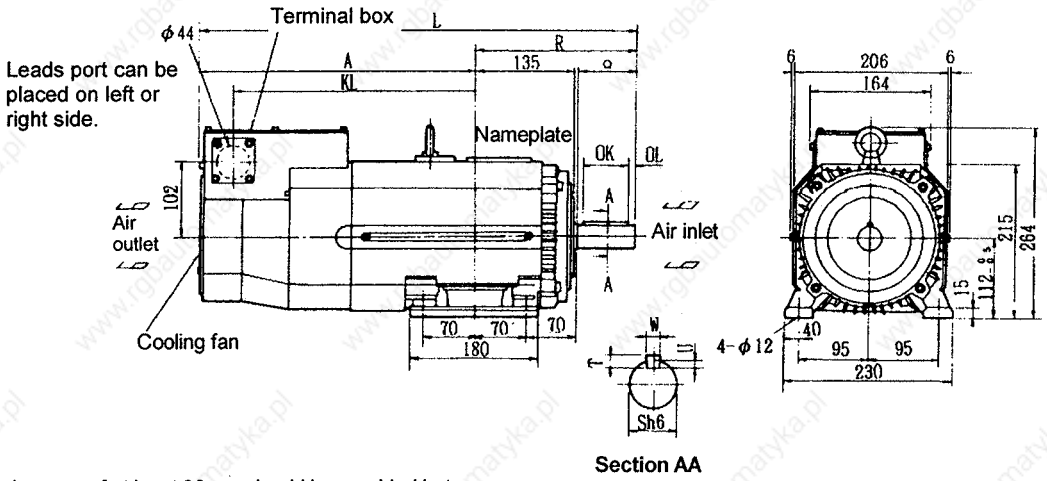

- A space of at least 30mm should be provided between the cooling fan and nearby located wall.

Frame No.	Motor			Shaft end							
	A	KL	L	Q	QK	R	S	T	U	W	QL
A112M	349	298	549	60	45	200	28	7	4	7	7.5
B112M	394	343	614	80	63	220	32	8	5	10	8

DIM IN mm

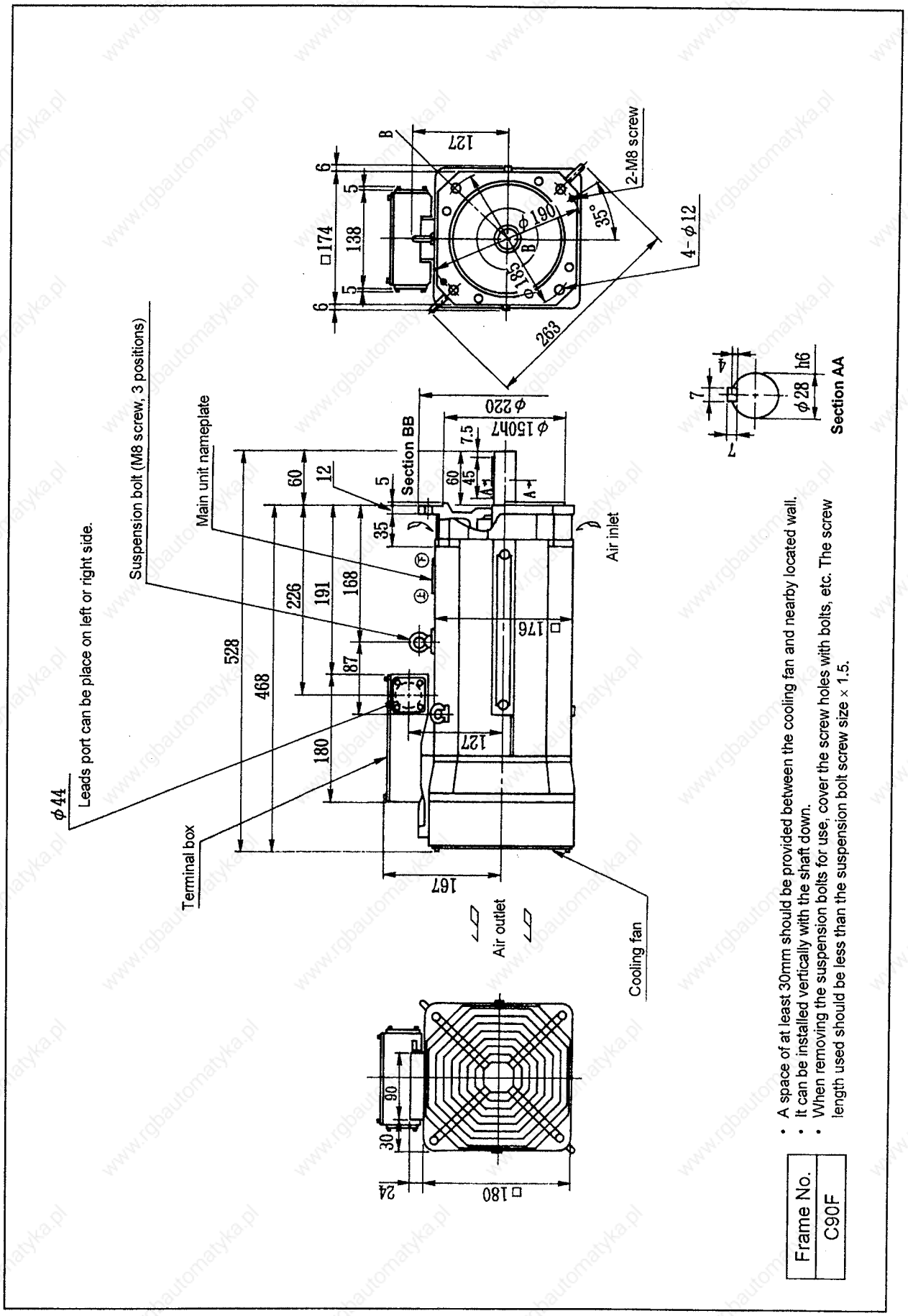

Frame No.
C90F

- A space of at least 30mm should be provided between the cooling fan and nearby located wall.
- It can be installed vertically with the shaft down.
- When removing the suspension bolts for use, cover the screw holes with bolts, etc. The screw length used should be less than the suspension bolt screw size × 1.5.

3. Functions

3.1 Control input signals

(1) Speed command input

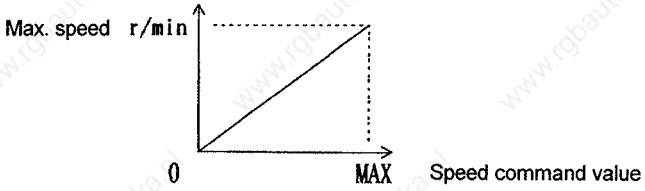

1) When the speed command value is 0, the motor speed will be 0; and when the speed command value is the maximum value, the motor speed will be the maximum motor speed set in parameter SP017 (TSP).
2) The motor will forward run and reverse run with the forward run and reverse run start commands. (The motor will not rotate with only the speed command value.)

(2) Forward run start command (SRN)

1) When SRN is ON, the motor will run in the counterclockwise direction (CCW) looking from the shaft side according to the commanded speed.
2) When SRN is OFF, the motor will decelerate to a stop, the transistor base will shut off and the motor will stop.
3) The orientation movement will be a priority when the orientation command is input.

(3) Reverse run start command (SRI)

1) When SRI is ON, the motor will run in the counterclockwise direction (CCW) looking from the shaft side according to the commanded speed.
2) When SRI is OFF, the motor will decelerate to a stop, the transistor base will shut off and the motor will stop.
3) The orientation movement will be a priority when the orientation command is input.

(4) Torque limit 1, 2, 3 input (TL1, TL2, TL3)

1) The torque limit will temporarily reduce the motor output torqued during mechanical spindle orientation or gear shift, etc., and will rotate the motor.
2) The following seven torque limit values can be used according to the combination of the TL1, TL2 and TL3 bit inputs.

TL3	TL2	TL1	Torque limit value
0	0	1	Torque limit value (%) set with parameter SP021
0	1	0	SP049
0	1	1	SP050
1	0	0	SP051
1	0	1	SP052
1	1	0	SP053
1	1	1	SP054

(Note) % indicates the percentage to the motor 30 min. rated torque.

(5) Orientation start command input (ORC)

1) This is the orientation movement start signal. When ORC is ON, the orientation will start regardless of the operation command (SRN, SRI).
2) When ORC is OFF, the motor will start rotating at the commanded speed again if either forward run (SRN) or reverse run (SRI) are input.
3) The orientation movement will be a priority when the orientation command is input.

(6) Gear selection command 1, 2, 3 input (GR1, GR2, GR3)

1) The spindle gear step for orientation movement or various position control movements is selected.
2) The following eight gear steps can be selected according to the combination of the GR1, GR2 and GR3 3bit inputs.
3) Do not change the signal while the orientation command or servo ON command is input.

GR3	GR2	GR1	Parameters used to set the gear ratio
0	0	0	SP025 (GRA1), SP029 (GRB1)
0	0	1	SP026 (GRA2), SP030 (GRB2)
0	1	0	SP027 (GRA3), SP031 (GRB3)
0	1	1	SP028 (GRA4), SP032 (GRB4)
1	0	0	SP225 (GRA5), SP229 (GRB5)
1	0	1	SP226 (GRA6), SP230 (GRB6)
1	1	0	SP227 (GRA7), SP231 (GRB7)
1	1	1	SP228 (GRA8), SP232 (GRB8)

(7) Index forward run command input (WRN), reverse run command input (WRI)

1) This is the command input for forward run index or reverse run index during multipoint orientation.
2) The forward run index will start from the CCW direction looking from the motor shaft end and the reverse run index will start from the CW direction.

(8) L coil selection command input (LCS)

1) This is the command input signal for selecting the low-speed coil or high-speed coil when changing the coils.
2) The high-speed coil is selected when LCS is OFF, and the low-speed coil is selected when LCS is ON.

(9) Sub-motor selection command input (MS)

1) This is the command input signal for selecting the main motor or sub-motor when changing during the 1-amplifier 2-motor specifications.
2) The main motor is selected when MS is OFF, and the sub-motor is selected when LCS is OFF.

(10) Cutting input (G1)

This signal determines whether cutting is being performed during C-axis control.
The operation will be determined as cutting when G1 is ON.

(11) Control mode selection command 1, 2, 3, 4, 5 input (SC1, SC2, SC3, SC4, SC5)

The operation mode during spindle drive unit position control is selected with the bits. The selections shown below are used.

SC5	SC4	SC3	SC2	SC1	Operation mode
0 0	1 1	0 ~ 0	0 1	0 1	Synchronous tap operation mode
0 0	1 1	1 ~ 1	0 1	0 1	C-axis operation mode
1 1	0 0	0 ~ 0	0 1	0 1	Spindle synchronous operation mode

(Note) The normal speed operation mode will be entered when bits other than the above are selected.

3.2 Control output signals

(1) Zero speed output signal (ZS)

1) ZS turns ON if the actual motor speed drops below the zero speed detection point in regard to the stop command.
2) The signal is output whether run command signal is SRN (forward run) or SRI (reverse run).
3) The minimum output pulse width is about 200ms.
4) The zero speed detection speed is set with parameter SP018 (ZSP) in the range of 0 to 1000min^{-1}.

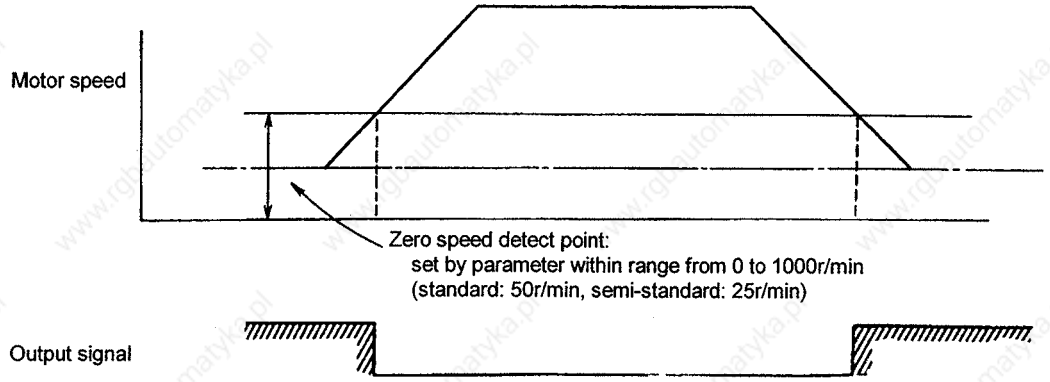

(2) Up-to-speed output signal (US)

1) USO turns ON when the actual motor speed reaches ±15% of the commanded speed.

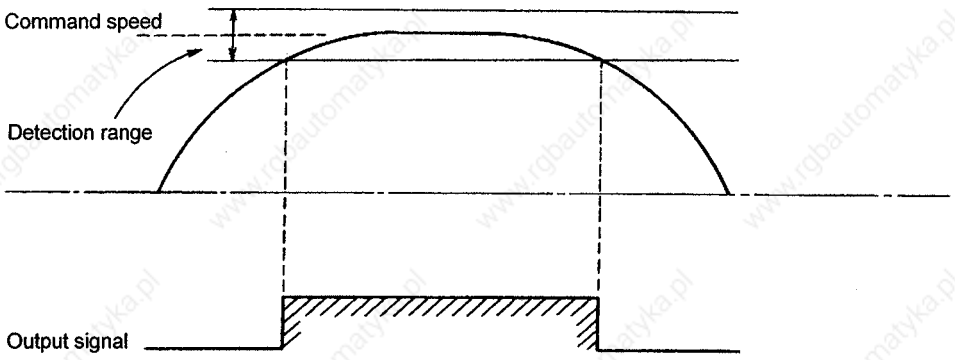

2) This signal is not output unless either SRN or SRI turns on.
3) The signal can be used to verify implementation of "forward run (M03)" or "reverse run (M04) command.
4) If the reverse run command turns ON, the motor will start to deceleration. The USO signal will turn OFF, and after confirming that the reached signal turns ON, the reverse command will be completed.

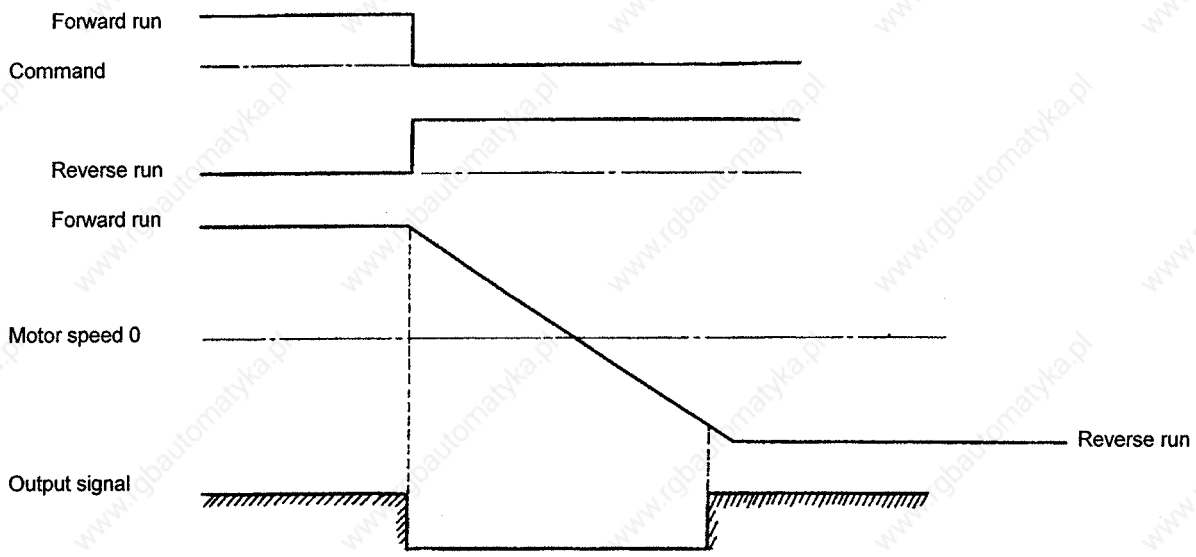

(3) Speed detection output (SD)

1) SDT turns ON when the speed drops below the speed set in parameter SP020 (SDTS).
2) The SDT signal will turn ON when the motor speed's absolute value drops below the set detection level regardless of the run command (SRN, SRI).

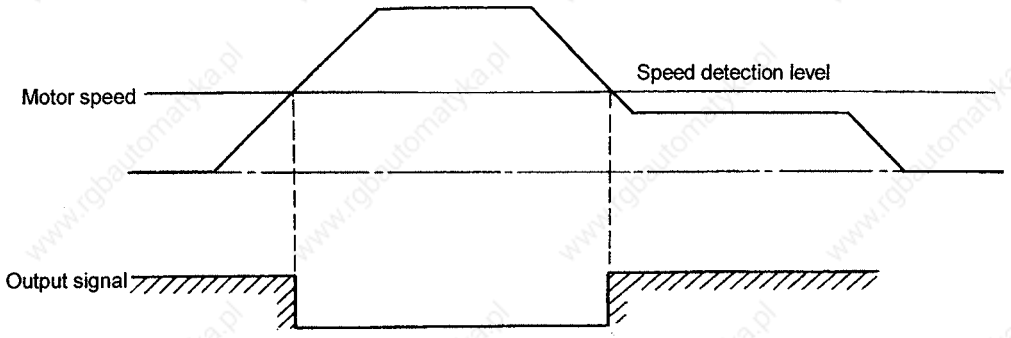

(4) Orientation complete output (ORCF)

ORCF will turn ON when the spindle position is currently within the in-position range set with parameter SP004 (OINP) during orientation.

(5) Current detect output (CD)

CD will turn ON when the current value is 110% or more than the rated current.

(6) Forward run starting command output (SRNA)

This is the answer output to the forward run start command input (SRN).

(7) Reverse run starting command output (SRIA)

This is the answer output to the reverse run start command input (SRI).

(8) Torque limiting 1, 2, 3 input (TL1A, TL2A, TL3A)

This is the answer output to the torque limit 1, 2, 3 input (TL1, TL2, TL3).

(9) Orientation starting command output (ORCA)

This is the answer output to the orientation start command input (ORC).

(10) Gear selecting command 1, 2, 3 output (GR1A, GR2A, GR3A)

This is the answer output to the gear selection command 1, 2, 3 input (GR1, GR2, GR3).

(11) Index forward run command output (WRNA), reverse run command output (WRIA)

This is the answer output to the index forward run command (WRN) and reverse run command (WRI).

(12) L coil selection command output (LCSA)

This is the answer output to the L coil selection command input (LCS).

(13) Sub-motor selection command output (MSA)

This is the answer output to the sub-motor selection command (MS).

(14) Synchronous speed match output (SYSA)

SYSA turns ON when the movement from the speed operation mode to the spindle synchronous operation mode is possible during spindle synchronous operation.

(15) Coil changeover output (MKC)

MKC turns ON for a set time when changing over from the L coil to the H coil or the H coil to the L coil during coil changeover.

(16) Index positioning complete output (WRCF)

WRCF turns ON when indexing is completed.

(17) Drive unit warning output (WRN)

WRN turns ON when any warning occurs in the spindle drive unit.

(18) Alarm output (ALM)

ALM turns ON when any alarm occurs in the spindle drive unit.

(19) Z-phase passed output (ZFIN)

ZFIN turns ON when the Z-phase is passed for the first time after the servo turns ON during position control.

(20) Position loop in-position output (INP)

INP turns ON when the current position is within the in-position range set with parameters during positioning other than orientation. INP turns OFF when the servo turns OFF.

(21) Control mode selection command 1, 2, 3, 4, 5 output (SC1A, SC2A, SC3A, SC4A, SC5A)

This is the answer output to the control mode selection command 1, 2, 3, 4, 5 input (SC1, SC2, SC3, SC4, SC5).

3.3 Meter outputs

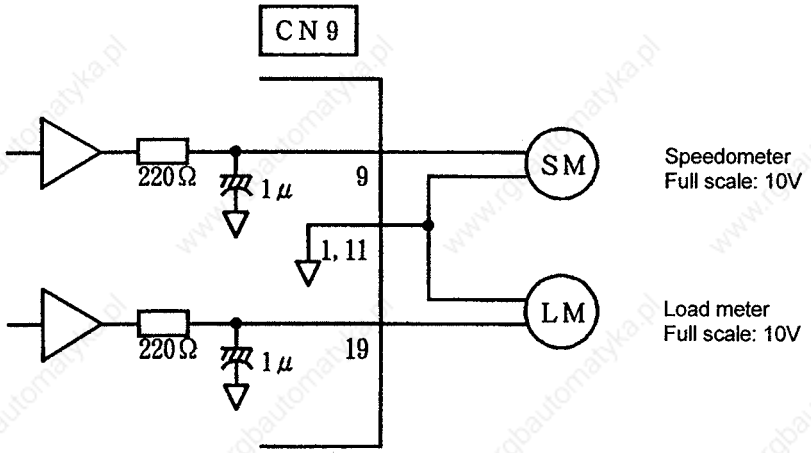

(1) Speedometer output

(a) The following meter is recommended for speedometer.
1) Model : YM-8G DC voltmeter (Mitsubishi)
2) Rating : 10VDC full scale
3) Internal impedance : About 10kΩ

(b) When motor runs at the max. speed, +10VDC is output, no matter of direction of rotation.

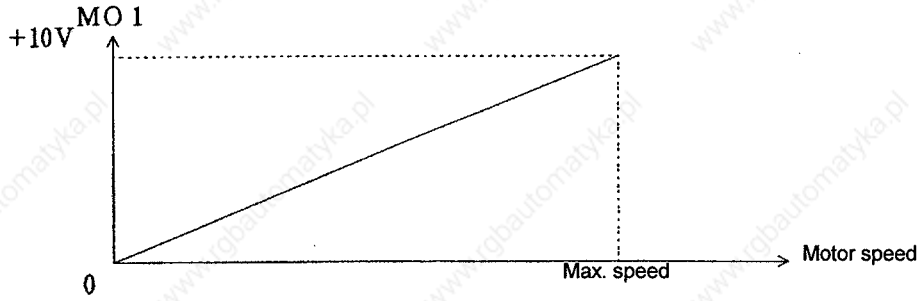

(2) Load meter output

(a) The following meter is recommended for load meter.
1) Model : YM-8G DC voltmeter (Mitsubishi)
2) Rating : 10VDC full scale
3) Internal impedance : About 10kΩ
4) Scale

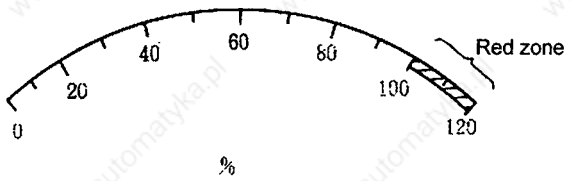

(b) Reading of load meter is percent (%) of load to the rated motor output. The relationship between motor kW and load meter reading is as follows:

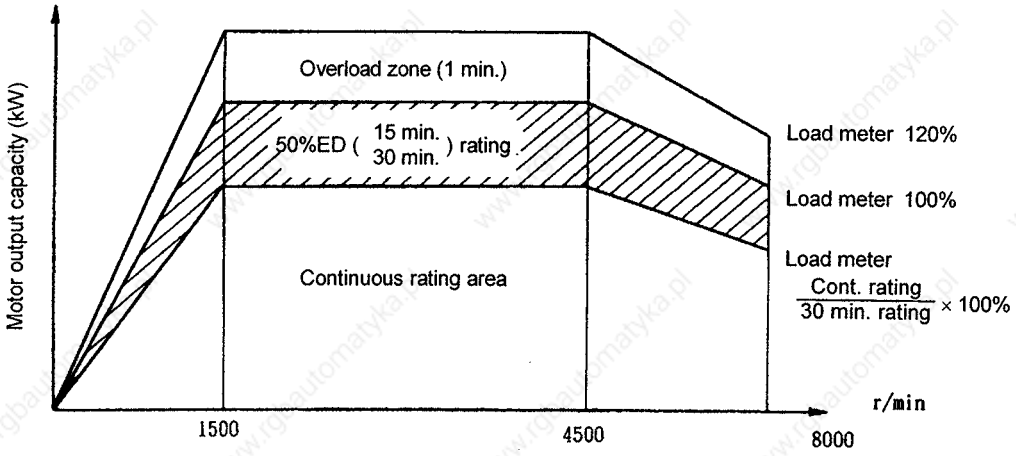

3.4 Output interface

Open emitter output

Output transistor rating
M54630P TR array
Tolerable voltage 24VDC or less
Tolerable current 50mA or less (per output)

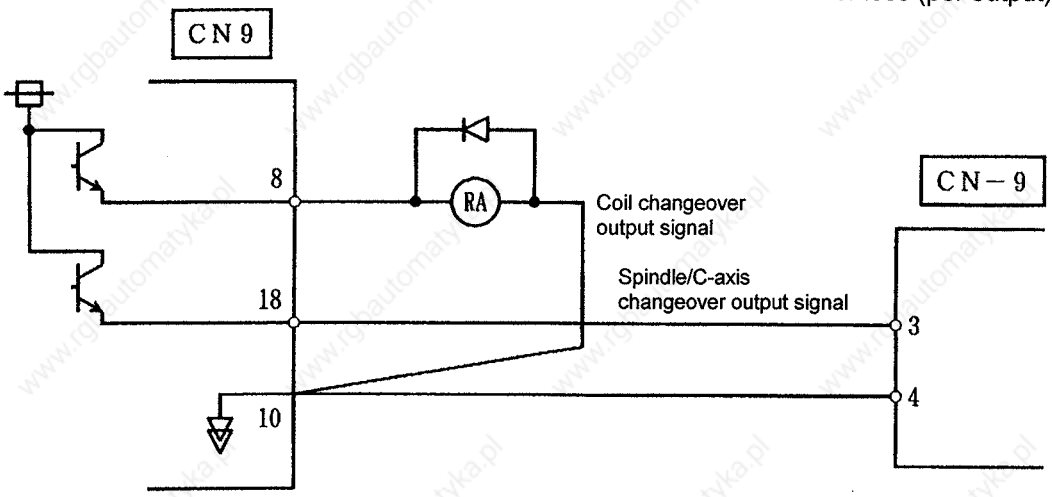

<Spindle drive unit> **<MHE90K (AD converter)>**

(Note 1) Connect the spindle/C-axis changeover output signal only when using the MHE90K detector.
(Note 2) The changeover circuit configuration for coil changeover is as shown below.

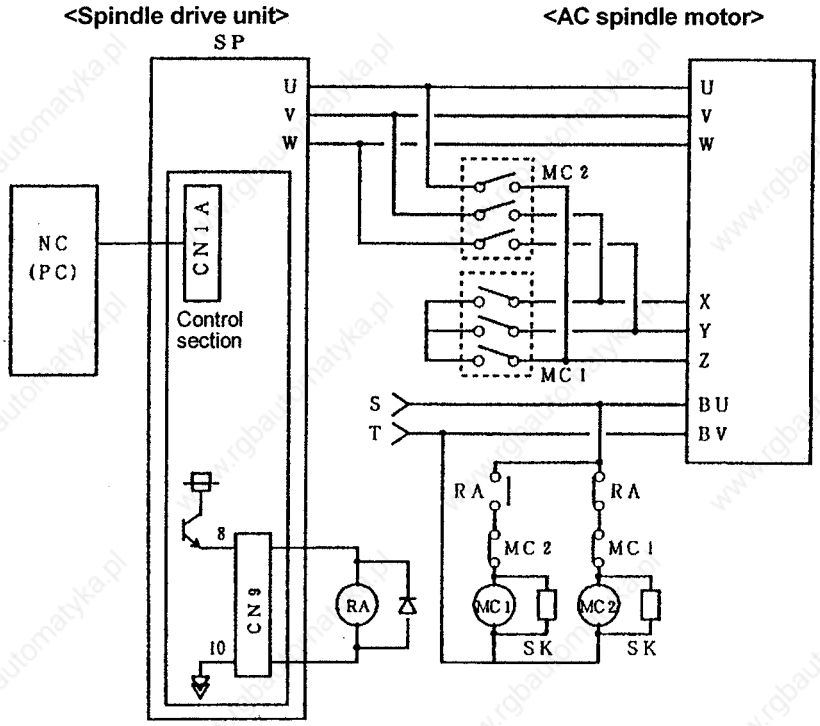

- The relays, contactors, cables, etc., for the spindle drive unit and AC spindle motor that are not enclosed in the bold line must be prepared by the machine maker.
- The relay (RA) must be connected in parallel with the flywheel diode; and the contactors (MC1, MC2) must be connected in parallel with the CR surge absorber coil.

* During low-speed coil selection ..... 人 connection (Turn MC1 ON, MC2 OFF)
During high-speed coil selection..... △ connection (Turn MC1 OFF, MC2 ON)

4. Status Display and Parameter Settings

⚠ WARNING

1. Do not operate the switches with wet hands. Failure to observe this could lead to electric shocks.
2. Do not operate the unit with the front cover removed. The high voltage terminals and charged sections will be exposed, and could lead to electric shocks.
3. Do not open the front cover while the power is ON or during operation. Failure to observe this could lead to electric shocks.

⚠ CAUTION

1. Check the parameters before starting operation. Failure to do so could lead to unforseen movements of the machine.
2. Do not touch the servo amplifier heat radiating fins, regenerative resistor or servomotor, etc., while the power is turned ON or immediately after turning the power OFF. Some parts are heated to high temperatures, and touching these could lead to burns.

4.1 Status display with 7-segment LED

The status can be displayed on the 7-segment LED on the power supply and spindle drives when the power is turned on.

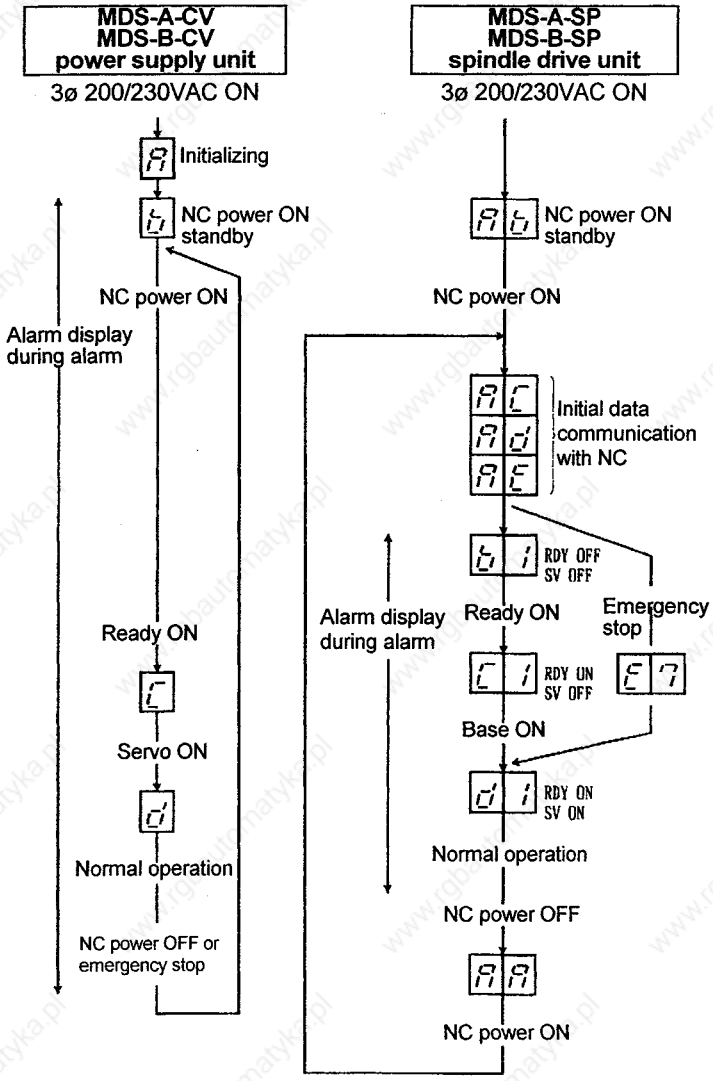

The right segment of 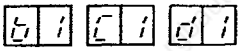 indicates the axis NO.
(This example shows the 1st axis.)

4.2 Spindle parameters

> **⚠ CAUTION**
>
> Do not make remarkable adjustments or changes of the parameters as the operation may become unstable.

(1) Parameter list

(Note 1) All spindle parameters (total of 384) can be set from the M500 CNC screen in the MDS-A-SP (MDS-B-SP).
(Note 2) Parameters marked with a * in the CNG column can be set and changed without turning off the NC power.
(Note 3) If the MDS-A-SP software version is A1 and above, the lower limit of the SP033 to SP384 tolerable setting range will all be changed to 0.

Class	No.	Abbr.	Name	Description	TYP	CNG	Standard setting	Unit	Tolerable setting range
Spindle specifications	SP001	PGM	Magnesensor, motor built-in encoder orientation position loop gain	The orientation time will be reduced when the value is increased and the servo rigidity will increase. On the other hand, the vibration will increase and machine sway will occur easily.	DEC	*	100	1/10rad/sec (1/sec)	0 ~ 360
	SP002	PGE	Encoder orientation position loop gain	Same as above.	DEC	*	100	1/10rad/sec (1/sec)	0 ~ 360
	SP003	PGCO	C-axis non-cutting time position loop gain	The position loop gain during C-axis non-cutting is set.	DEC	*	15	rad/sec (1/sec)	0 ~ 100
	SP004	OINP	Orientation in-position width	The position error range where the orient complete signal is output is set.	DEC	*	16	1/16 deg.	1 ~ 2880
	SP005	OSP	Orientation changeover speed limit value	The motor speed limit value for when changing from the speed loop to position loop during orientation is set. When the setting value is 0, the limit value will be SP017 (TSP).	DEC		0	r/min	0 ~ 32767
	SP006	CSP	Deceleration rate during orientation	The orientation time will be reduced when the value is increased, but the vibration will increase.	DEC	*	20		1 ~ 1000
	SP007	OPST	Orientation position shift amount	The orientation stop position is set. ① Motor built-in encoder, encoder: Set a value that is 360° divided by 4096. ② Magnesensor: Divide –5° to +5° by 1024, and set 0° as 0.	DEC	*	0		① 0~4095 ② –512~512
	SP008			Not used. Set to 0.	DEC		0		~
	SP009	PGT	Synchronous tap position loop gain	The spindle position loop gain during synchronous tap is set.	DEC	*	15	rad/sec (1/sec)	1 ~ 100
	SP010	PGS	Spindle synchronization position loop gain	The spindle position loop gain during spindle synchronization is set.	DEC	*	15	rad/sec (1/sec)	1 ~ 100
	SP011 ~ SP16			Not used. Set to 0.	DEC		0		~
	SP017	TSP	Motor max. speed	The motor's maximum speed is set.	DEC		6000	r/min	1 ~ 32767
	SP018	ZSP	Motor zero speed	The motor speed where zero speed is output is set.	DEC		50	r/min	1 ~ 1000
	SP019	CSN1	Speed command Acceleration/deceleration time constant	The time constant for the speed command from 0 to the maximum speed is set. (This is invalid during position loop.)	DEC		30	10 ms	1 ~ 32767
	SP020	SDTS	Speed detection set value	The motor speed where the speed detection output is performed is set. Normally, 10% of the SP017 (TSP) value is set.	DEC		600	r/min	1 ~ 32767
	SP021	TLM1	Torque limit 1	The torque limit ratio for when torque limit signal 001 is set.	DEC		10	%	1 ~ 120
	SP022	VGNP1	Speed loop gain proportion item during speed control	The speed loop proportional gain during speed control is set. The response will improve when increased, but vibration and sound will increase.	DEC		63	rad/s	0 ~ 1000
	SP023	VGNI1	Speed loop gain integral item during speed control	The speed loop integral gain during speed control is set. Normally, this is set so that the percentage to SP022 (VGNP1) is approximately constant.	DEC		60	1/10 rad/s	0 ~ 1000
	SP024			Not used. Set to 0.	DEC		0		~
	SP025	GRA1	Spindle side No. of gear teeth 1	The No. of teeth on the spindle side is set for gear 000.	DEC		1		1 ~ 32767
	SP026	GRA2	Spindle side No. of gear teeth 2	The No. of teeth on the spindle side is set for gear 001.	DEC		1		1 ~ 32767
	SP027	GRA3	Spindle side No. of gear teeth 3	The No. of teeth on the spindle side is set for gear 010.	DEC		1		1 ~ 32767
	SP028	GRA4	Spindle side No. of gear teeth 4	The No. of teeth on the spindle side is set for gear 011.	DEC		1		1 ~ 32767
	SP029	GRB1	Motor shaft side No. of gear teeth 1	The No. of teeth on the motor shaft side is set for gear 000.	DEC		1		1 ~ 32767

Class	No.	Abbr.	Name	Description	TYP	CNG	Standard setting	Unit	Tolerable setting range
Spindle/machine specifications	SP030	GRB2	Motor shaft side No. of gear teeth 2	The No. of teeth on the motor shaft side is set for gear 001.	DEC		1		1 ~ 32767
	SP031	GRB3	Motor shaft side No. of gear teeth 3	The No. of teeth on the motor shaft side is set for gear 010.	DEC		1		1 ~ 32767
	SP032	GRB4	Motor shaft side No. of gear teeth 4	The No. of teeth on the motor shaft side is set for gear 011.	DEC		1		1 ~ 32767
	SP033	SFNC1	Spindle function 1	This corresponds to bits, and sets the spindle function 1 selection. Refer to section 4.2.(2) for details.	HEX		0000		0000 ~ FFFF
	SP034	SFNC2	Spindle function 2	This corresponds to bits, and sets the spindle function 1 selection. Refer to section 4.2.(2) for details.	HEX		0000		0000 ~ FFFF
	SP035	SFNC3	Spindle function 3	This corresponds to bits, and sets the spindle function 1 selection. Refer to section 4.2.(2) for details.	HEX		0000		0000 ~ FFFF
	SP036	SFNC4	Spindle function 4	This corresponds to bits, and sets the spindle function 1 selection. Refer to section 4.2.(2) for details.	HEX		0000		0000 ~ FFFF
	SP037	SFNC5	Spindle function 5	This corresponds to bits, and sets the spindle function 1 selection. Refer to section 4.2.(2) for details.	HEX		0000		0000 ~ FFFF
	SP038	SFNC6	Spindle function 6	This corresponds to bits, and sets the spindle function 1 selection. Refer to section 4.2.(2) for details.	HEX		0000		0000 ~ FFFF
	SP039	ATYP	Amplifier type	The amplifier type is set. Set each amplifier type or 0. This corresponds to MDS-A-SP (Version A2 and above), and MDS-B-SP.	HEX		0000		0000 ~ FFFF
	SP040	MTYP	Motor type	This is valid when SP034 (SFNC2) bit -0 is set to 0. Set the applicable motor No. from the standard motors shown in section 4.2(3).	HEX		0000		0000 ~ FFFF
	SP041	PTYP	Power supply type	This is set when this unit is a signal connection axis with the power supply unit. (Set to 0 when there is no axis connected.) Refer to section 4.2(3) for details.	HEX		0000		0000 ~ FFFF
	SP042	CRNG	C-axis detector range	The detector range for the C-axis is set. Set to 0.	DEC		0		0 ~ 7
	SP043	TRNG	Synchronous tap/ spindle synchronization detector range	The detector range for the synchronous tap/spindle synchronization is set. Set to 0.	DEC		0		0 ~ 7
	SP044	TRANS	NC communication cycle	The cycle of communication with the NC is set.	DEC		Standard = 0 Special = 1028		0 ~ 32767
	SP045			Not used. Set to 0.	DEC		0		~
	SP046	CSN2	Speed command dual cushion	The speed command is smoothed only during the acceleration/deceleration start according to the acceleration/deceleration time constant set in SP019 (CSN1). The operation will be smoother when the value is small, but the acceleration/deceleration time will increase. Set to 0 to invalidate.	DEC		0		0 ~ 1000
	SP047	SDTR	Speed detection reset value	The hysteresis width for the reset of the speed detection set value set in SP020 (SDTS) is set.	DEC		30	r/min	0 ~ 1000
	SP048	SUT	Speed reached range	The percentage of the speed deflection for where the speed reached signal is output is set.	DEC		15	%	0 ~ 100
	SP049	TLM2	Torque limit 2	The torque limit ratio for torque limit signal 010 is set.	DEC		20	%	1 ~ 120
	SP050	TLM3	Torque limit 3	The torque limit ratio for torque limit signal 011 is set.	DEC		30	%	1 ~ 120
	SP051	TLM4	Torque limit 4	The torque limit ratio for torque limit signal 100 is set.	DEC		40	%	1 ~ 120
	SP052	TLM5	Torque limit 5	The torque limit ratio for torque limit signal 101 is set.	DEC		50	%	1 ~ 120
	SP053	TLM6	Torque limit 6	The torque limit ratio for torque limit signal 110 is set.	DEC		60	%	1 ~ 120
	SP054	TLM7	Torque limit 7	The torque limit ratio for torque limit signal 111 is set.	DEC		70	%	1 ~ 120
	SP055	SETM	Speed deflection excessive timer	The time until the speed deflection excessive error is output is set. Set a value that is longer than the acceleration/deceleration time.	DEC		12	sec	0 ~ 60

Parameter setting	Amplifier type	Parameter setting	Amplifier type
0000	—	0008	SP-150
0001	SP-075	0009	SP-185
0002	SP-15	000A	SP-220
0003	SP-22	000B	SP-260
0004	SP-37	000C	SP-300
0005	SP-55	000D	CSP-370
0006	SP-75	000E	CSP-450
0007	SP-110	000F	SP-04

Class	No.	Abbr.	Name	Description	TYP	CNG	Standard setting	Unit	Tolerable setting range
Spindle/machine specifications	SP056	PYVR	Variable excitation	The minimum value of the variable excitation ratio is set. Select a small value when the gear sound, etc., is large, but a larger value is more effective for impact response.	DEC	*	50	%	0 ~ 100
	SP057			Not used. Set to 0.	DEC		0		~
	SP058	HSPT	Max. speed during S-analog high-speed tap	The max. motor speed for the S-analog 10V input when performing synchronous tap with the S-analog speed command is set.	DEC		6000	r/min	1 ~ 32767
	SP059	MKT	Coil changeover base shut off timer	The base shut off time for changing the contactor during coil change is set. The contactor may be burned if the value is too small.	DEC		150	ms	50 ~ 10000
	SP060	MKT2	Current limit timer after coil changeover	The time to limit the current after contactor changeover is completed during coil changeover is set.	DEC		500	ms	0 ~ 10000
	SP061	MKIL	Current limit value after coil changeover	The current limit value that operates for only the time set in SP060 (MKT2) after contactor changeover is completed during coil changeover is set.	DEC		75	%	0 ~ 120
	SP062			Not used. Set to 0.	DEC		0		~
	SP063	OLT	Overload alarm detection time	The detection time constant for motor overload alarm detection is set.	DEC		60	sec	0 ~ 1000
	SP064	OLL	Overload alarm detection level.	The detection level for the motor overload alarm detection is set.	DEC		110	%	0 ~ 200
Speed control	SP065	VCGN1	Variable speed loop proportional gain target value	The speed loop proportional gain magnification for SP022 (VGNP1) in the motor max. speed set in SP017 (TSP) is set.	DEC		100	%	0 ~ 100
	SP066	VCSN1	Variable speed loop proportional gain change start speed	The speed to start the speed loop proportional gain change is set. 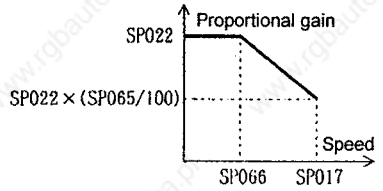	DEC		0	r/min	0 ~ 32767
	SP067	VIGWA	Variable current loop gain change start speed	The speed to start current loop gain change is set.	DEC		0		0 ~ 32767
	SP068	VIGWB	Variable current loop gain change complete speed	The speed to complete current loop gain change is set.	DEC		0		0 ~ 32767
	SP069	VIGN	Variable current loop gain target value	The current loop gain (torque amount and excitation amount) magnification in the change complete speed set in SP068 (VIGWB) is set. The magnification will be 1 when set to 0. 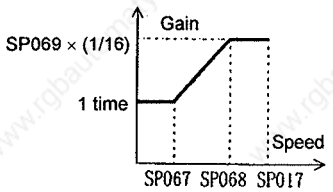 **(Note)** Refer to the following table for guidelines to setting SP067 to SP069.	DEC		0		0 ~ 32767

Motor max. speed SP017 (TSP)	SP067 (VIGWA)	SP068 (VIGWB)	SP069 (VIGN)
0 ~ 6000	0	0	0
6001 ~ 8000	5000	8000	45
8001 or more	5000	10000	64

The following apply to the above settings:

1) When running at the max. speed, if the motor seems to hunt (high frequency vibration), lower SP068 in -8 increments, and set so that there is no problem.
2) When running at the max. speed, if the motor seems to groan (low frequency vibration), raise SP068 in +8 increments, and set so that there is no problem.
3) When decelerating from the max. speed, if the "overcurrent alarm 32" or "overvoltage alarm 75" occurs, the current loop gain may be insufficient in the high speed region. Thus, raise SP068 in +16 increments, and set so that there is no problem.

Class	No.	Abbr.	Name	Description	TYP	CNG	Standard setting	Unit	Tolerable setting range
Speed control	SP070	FHz	Machine resonance suppression filter frequency	If machine vibration occurs during speed or position control, set the frequency for suppressing the vibration. Note that a value that is 100Hz or more must be set. Set to 0 when not using.	DEC	*	0	Hz	100 ~ 3000
	SP071 ~ SP075		Fixed control constant	This is a parameter determined by Mitsubishi. Set 0 when there is no particular designation.	DEC		0		~
	SP076	FONS	Machine resonance suppression filter activation speed	If the vibration is large when stopping the motor (ex., during orientation stop) when the machine vibration suppression filter is activated by SP070, activate the machine vibration suppression filter at a speed higher than that set in the parameter. The filter will be enabled for all speed ranges when 0 is set.	DEC		0	r/min	0 ~ 32767
	SP077	TDSL	Fixed control constant	This is a parameter determined by Mitsubishi. Set 14 when there is no particular designation.	DEC		14		
	SP078 ~ SP082		Fixed control constant	This is a parameter determined by Mitsubishi. Set 0 when there is no particular designation.					
	SP083 ~ SP086			Not used. Set to 0.					
	SP087	DIQM	Variable torque limit magnification target value during deceleration	The minimum value of the torque limit value fluctuated during deceleration is set.	DEC		75	%	0 ~ 150
	SP088	DIQN	Variable torque limit magnification change start speed during decelration	The speed to start changing the torque limit value during deceleration is set.	DEC				0 ~ 32767

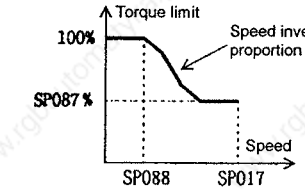

(Note) Refer to the following flow for the SP087 and SP088 setting and changing procedures. (SP088 does not need to be changed.) Adjust the deceleration time to a time equivalent to the acceleration time with SP087.

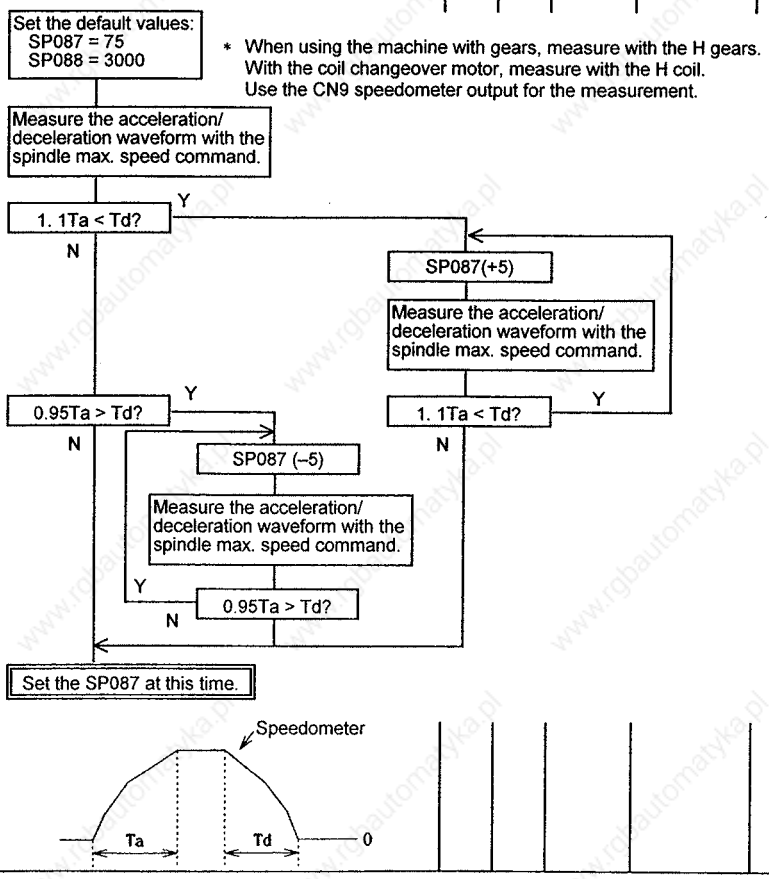

Class	No.	Abbr.	Name	Description	TYP	CNG	Standard setting	Unit	Tolerable setting range
Speed control	SP089	VGHP	Speed loop gain proportion item during S-analog high-speed tap	The speed loop proportional gain during S-analog high-speed tap is set. The response will improve when increased but the vibration and sound will increase.	DEC		63	rad/s	0 ~ 1000
	SP090	VGHI	Speed loop gain integral item during S-analog high-speed tap	The speed loop integral gain during S-analog high-speed tap is set.	DEC		60	1/10rad/s	0 ~ 1000
	SP091	OFSN	Offset compensation during motor PLG forward run	The PLG offset value for forward run is set. Normally 0 is set.	DEC	*	0	–1mv	–2048~2047
	SP092	OFSI	Offset compensation during motor PLG reverse run	The PLG offset value for reverse run is set. Normally 0 is set.	DEC	*	0	–1mv	–2048~2047
	SP093			Not used. Set to 0.	DEC		0		~
	SP094	LMAV	Load meter output filter	The filter time constant for load meter output is set. The time constant will be 100ms when the standard value 0 is set.	DEC		0	2ms	0 ~ 32767
	SP095			Not used. Set to 0.	DEC		0		~
	SP096	EGAR	Encoder gear ratio	The gear ratio of the spindle end and encoder end (excluding motor built-in encoder) is set as follows: ① 1:1 Set value = 0 ② 1:2 Set value = 1 ③ 1:4 Set value = 2 ④ 1:8 Set value = 3	DEC		0		0 ~ 4
Orientation control	SP097	SPECO	Orientation specification	This corresponds to the bit and selects the orientation specifications. Refer to section 4.2. (2) for details.	HEX		0000		0000 ~ FFFF
	SP098	VGOP	Speed loop gain proportional item during orientation	The speed loop proportional gain during orientation is set. The response will improve when increased but the vibration and sound will increase.	DEC		63	rad/s	0 ~ 1000
	SP099	VGOI	Speed loop gain integral item during orientation	The speed loop integral gain during orientation is set.	DEC		60	1/10rad/s	0 ~ 1000
	SP100	VGOD	Speed loop gain delay advance item during orientation	The speed loop delay advance gain during orientation is set. PI control will be applied when set to 0.	DEC		15	1/10rad/s	0 ~ 1000
	SP101	DINP	Orientation dummy in-position width	When using the orientation in-position advance function, set an in-position width that is larger than the standard in-position width SP004 (OINP).	DEC		16	1/16deg.	1 ~ 2880
	SP102	OODR	Excessive error value during orientation	The excessive error width during orientation is set.	DEC		32767	1/4 pulse (1 pulse = 0.088deg.)	1 ~ 32767
	SP103	FTM	Positioning complete off time timer	The time to forcibly turn off an index positioning complete signal other than the orientation complete signal due to the starting of the index start signal is set.	DEC		200	ms	1 ~ 10000
	SP104	TLOR	Torque control value during orientation servo lock	The torque limit value during orientation in-position output is set. Note that if the external torque limit signal is input, the torque limit value from this parameter will be invalid.	DEC		100	%	1 ~ 120
	SP105	IQGO	Current loop gain magnification 1 during orientation	The current loop gain (torque amount) magnification during orientation is set.	DEC		100	%	1 ~ 1000
	SP106	IDGO	Current loop gain magnification 2 during orientation	The current loop gain (excitation amount) magnification during orientation is set.	DEC		100	%	1 ~ 1000
	SP107	CSP2	Deceleration ratio during orientation	The deceleration ratio during orientation for gear 001 is set. When the set value is 0, the setting will be the same as SP006 (CSP).	DEC	*	0		1 ~ 1000
	SP108	CSP3	Deceleration ratio during orientation	The deceleration ratio during orientation for gear 010 is set. When the set value is 0, the setting will be the same as SP006 (CSP).	DEC	*	0		1 ~ 1000
	SP109	CSP4	Deceleration ratio during orientation	The deceleration ratio during orientation for gear 011 is set. When the set value is 0, the setting will be the same as SP006 (CSP).	DEC	*	0		1 ~ 1000
	SP110 ~ SP113			Not used. Set to 0.	DEC		0		~

Class	No.	Abbr.	Name	Description	TYP	CNG	Standard setting	Unit	Tolerable setting range
Orientation control	SP114	OPER	Orientation pulse miss check value	If the pulse miss value during orientation stop is higher than this setting, the alarm "5C" occurs. (Invalid when set to 0.) When using this setting, establish SP114>1.5 × SP004 (orientation in-position width).	DEC		0	360/4096°	0 ~ 32767
	SP115 ~ SP118			Not used. Set to 0.	DEC		0		~
	SP119	MPGH	Orientation position gain H coil compensation magnification	The compensation magnification for the orientation position loop gain when using the H coil is set. Orientation position loop gain for H coil = SP001 or SP002 × SP119/256 If 0 is set, the same value as SP001 or SP002 will be applied.	DEC		0	1/256 times	0 ~ 2560
	SP120	MPGL	Orientation position gain L coil compensation magnification	The compensation magnification for the orientation position loop gain when using the L coil is set. Orientation position loop gain for L coil = SP001 or SP002 × SP120/256 If 0 is set, the same value as SP001 or SP002 will be applied.	DEC		0	1/256 times	0 ~ 2560
	SP121	MPCSH	Orientation deceleration rate H coil compensation magnification	The compensation magnification for the orientation deceleration rate when using the H coil is set. Orientation deceleration rate for H coil = SP006 × SP121/256 If 0 is set, the same value as SP006 will be applied.	DEC		0	1/256 times	0 ~ 2560
	SP122	MPCSL	Orientation deceleration rate L coil compensation magnification	The compensation magnification for the orientation deceleration rate when using the L coil is set. Orientation deceleration rate for L coil = SP006 ×SP122/256 If 0 is set, the same value as SP006 will be applied.	DEC		0	1/256 times	0 ~ 2560
	SP123	MGDO	Magnesensor output peak value	This is the operation adjustment parameter for magnesensor orientation. Set the peak value of the magnesensor output. Increase the value if the gap between the sensor and magnet is small, and decrease the value when large.	DEC	*	Standard magnet = 542 Compact magnet = 500		1 ~ 10000
	SP124	MGD1	Magnesensor linear zone width	This is the operation adjustment parameter for magnesensor orientation. Set the magnesensor linear zone width. Decrease the value if the magnet installation radius is large, and increase when small.	DEC	*	Standard magnet = 768 Compact magnet = 440		1 ~ 10000
	SP125	MGD2	Magnesensor changeover point	This is the operation adjustment parameter for magnesensor orientation. Set the distance from the target stop point when changing the position feedback to the magnesensor output. Normally, a value that is approximately half of SP124 is set.	DEC	*	Standard magnet = 384 Compact magnet = 220		1 ~ 10000
	SP126 ~ SP128			Not used. Set to 0.	DEC		0		~
C-axis control	SP129	SPECC	C-axis specifications	This corresponds to bits, and sets the C-axis specifications. Refer to section 4.2.(2) for details.	HEX		0000		0000 ~ FFFF
	SP130	PGC1	No. 1 position loop gain during C-axis cutting	The position loop gain when No. 1 (standard cutting gain) gain is selected during C-axis cutting is set.	DEC	*	15	rad/sec (1/sec)	1 ~ 100
	SP131	PGC2	No. 2 position loop gain during C-axis cutting	The position loop gain when No. 2 (interpolation cutting gain) gain is selected during C-axis cutting is set.	DEC	*	15	rad/sec (1/sec)	1 ~ 100
	SP132	PGC3	No. 3 position loop gain during C-axis cutting	The position loop gain when No. 3 (heavy cutting gain) gain is selected during C-axis cutting is set.	DEC	*	15	rad/sec (1/sec)	1 ~ 100
	SP133	PGC4	No. 4 position loop gain during C-axis cutting	The position loop gain when No. 4 (gain when cutting is stopped) gain is selected during C-axis cutting is set.	DEC	*	15	rad/sec (1/sec)	1 ~ 100
	SP134	VGCP0	Speed loop gain proportion item during C-axis non-cutting	The speed loop proportional gain during C-axis non-cutting is set.	DEC		63	rad/s	0 ~ 5000
	SP135	VGCI0	Speed loop gain integral item during C-axis non-cutting	The speed loop integral gain during C-axis non-cutting is set.	DEC		60	1/10rad/s	0 ~ 5000
	SP136	VGCD0	Speed loop gain delay advance item during C-axis non-cutting	The speed loop delay advance gain during C-axis non-cutting is set. PI control will be applied when set to 0.	DEC		15	1/10rad/s	0 ~ 5000
	SP137	VGCP1	No. 1 speed loop gain proportion item during C-axis cutting	The speed loop proportional gain when No. 1 gain is selected during C-axis cutting is set.	DEC		63	rad/s	0 ~ 5000

Class	No.	Abbr.	Name	Description	TYP	CNG	Standard setting	Unit	Tolerable setting range
C-axis control	SP138	VGCI1	No. 1 speed loop gain integral item during C-axis cutting	The speed loop integral gain when No. 1 gain is selected during C-axis cutting is set.	DEC		60	1/10rad/s	0 ~ 5000
	SP139	VGCD1	No. 1 speed loop gain delay advance item during C-axis cutting	The speed loop delay advance gain when No. 1 gain is selected during C-axis cutting is set. PI control will be applied when set to 0.	DEC		15	1/10rad/s	0 ~ 5000
	SP140	VGCP2	No. 2 speed loop gain proportion item during C-axis cutting	The speed loop proportional gain when No. 2 gain is selected during C-axis cutting is set.	DEC		63	rad/s	0 ~ 5000
	SP141	VGCI2	No. 2 speed loop gain integral item during C-axis cutting	The speed loop integral gain when No. 2 gain is selected during C-axis cutting is set.	DEC		60	1/10rad/s	0 ~ 5000
	SP142	VGCD2	No. 2 speed loop gain delay advance item during C-axis cutting	The speed loop delay advance gain when No. 2 gain is selected during C-axis cutting is set. PI control will be applied when set to 0.	DEC		15	1/10rad/s	0 ~ 5000
	SP143	VGCP3	No. 3 speed loop gain proportion item during C-axis cutting	The speed loop proportional gain when No. 3 gain is selected during C-axis cutting is set.	DEC		63	rad/s	0 ~ 5000
	SP144	VGCI3	No. 3 speed loop gain integral item during C-axis cutting	The speed loop integral gain when No. 3 gain is selected during C-axis cutting is set.	DEC		60	1/10rad/s	0 ~ 5000
	SP145	VGCD3	No. 3 speed loop gain delay advance item during C-axis cutting	The speed loop delay advance gain when No. 3 gain is selected during C-axis cutting is set. PI control will be applied when set to 0.	DEC		15	1/10rad/s	0 ~ 5000
	SP146	VGCP4	Speed loop gain proportion item during C-axis cutting stop	The speed loop proportional gain during C-axis cutting stop is set.	DEC		63	rad/s	0 ~ 5000
	SP147	VGCI4	Speed loop gain integral item during C-axis cutting stop	The speed loop integral gain during C-axis cutting stop is set.	DEC		60	1/10rad/s	0 ~ 5000
	SP148	VGCD4	Speed loop gain delay advance item during C-axis cutting stop	The speed loop delay advance gain during C-axis cutting stop is set. PI control will be applied when set to 0.	DEC		15	1/10rad/s	0 ~ 5000
	SP149	CZRN	C-axis zero point return speed	This is valid when SP129 (SPECC)-bitE is set to 0. The zero point return speed for when changing from the speed loop to position loop is set.	DEC	*	50	r/min	1 ~ 500
	SP150	CPDT	C-axis zero point return deceleration point	This is valid when SP129 (SPECC)-bitE is set to 0. The deceleration point for when decelerating from the C-axis zero point return speed to the target stop. If there is any sway when stopping, decrease the value.	DEC	*	1		1 ~ 10000
	SP151	CPSTL	C-axis zero point return shift amount (Low byte)	This is valid when SP129 (SPECC)-bit E is set to 0. This sets C-axis zero point.	HEX	*	H:0000	1/1000deg.	00000000 ~FFFFFFFF
	SP152	CPSTL	C-axis zero point return shift amount (High byte)				L:0000		
	SP153	CINP	C-axis in-position width	The position error range where the in-position signal is output during C-axis is set.	HEX	*	03E8	1/1000deg.	0000 ~ FFFF
	SP154	CODRL	Excessive error width during C-axis (Low byte)	The excessive error width during C-axis is set.	HEX	*	H:0001	pulse (1 pulse = 1/1000deg.)	00000000 ~FFFFFFFF
	SP155	CODRH	Excessive error width during C-axis (High byte)				L:D4C0		
	SP156 ~ SP158			Not used. Set to 0.	DEC		0		~
	SP159	CPYC	Variable excitation ratio during C-axis non-cutting	The min. value of the variable excitation ratio during C-axis non-cutting is set.	DEC	*	50	%	0 ~ 100
	SP160	CPYX	Variable excitation ratio during C-axis cutting	The min. value of the variable excitation ratio during C-axis cutting is set.	DEC	*	100	%	0 ~ 100
	SP161	IQGC0	Current loop gain during C-axis non-cutting Magnification 1	The current loop gain (torque amount) magnification during C-axis non-cutting is set.	DEC		100	%	0 ~ 1000
	SP162	IDGC0	Current loop gain during C-axis non-cutting Magnification 2	The current loop gain (exciting amount) magnification during C-axis non-cutting is set.	DEC		100	%	0 ~ 1000

Class	No.	Abbr.	Name	Description	TYP	CNG	Standard setting	Unit	Tolerable setting range
C-axis control	SP163	IQCG1	Current loop gain during C-axis cutting Magnification 1	The current loop gain (torque amount) magnification during C-axis cutting is set.	DEC		100	%	0 ~ 1000
	SP164	IDGC1	Current loop gain during C-axis cutting Magnification 2	The current loop gain (exciting amount) magnification during C-axis cutting is set.	DEC		100	%	0 ~ 1000
	SP165	PG2C	C-axis position loop gain 2	Set the No. 2 position loop gain when performing high-gain control during C-axis control. This applies to all operation modes in the C-axis control. Set to 0 when not using.	DEC	*	0	rad/sec (1/sec)	0 ~ 999
	SP166	PG3C	C-axis position loop gain 3	Set the No. 3 position loop gain when performing high-gain control during C-axis control. This applies to all operation modes in the C-axis control. Set to 0 when not using.	DEC	*	0	rad/sec (1/sec)	0 ~ 999
	SP167 ~ SP176			Not used. Set to 0.	DEC		0		~
Spindle synchronization	SP177	SPECS	Spindle synchronization specifications	This corresponds to bits and sets the spindle synchronization specifications. Refer to section 4.2(2) for details.	HEX		0000		0000 ~ FFFF
	SP178	VGSP	Speed loop gain proportion item during spindle synchronization	The speed loop proportional gain during spindle synchronization is set.	DEC		63	rad/s	0 ~ 1000
	SP179	VGS1	Speed loop gain integral item during spindle synchronization	The speed loop integral gain during spindle synchronization is set.	DEC		60	1/10rad/s	0 ~ 1000
	SP180	VGSD	Speed loop gain delay advance item during spindle synchronization	The speed loop delay advance gain during spindle synchronization is set. PI control will be applied when set to 0.	DEC		15	1/10rad/s	0 ~ 1000
	SP181	VCGS	Variable speed loop proportional gain target value during spindle synchronization	The speed loop proportional gain magnification for SP178 (VGSP) in the max. motor speed set with SP017 (TSP) during spindle synchronization is set.	DEC		100	%	0 ~ 100
	SP182	VCSS	Variable speed loop proportional gain change start speed during spindle synchronization	The speed where speed loop proportional gain change starts during spindle synchronization is set. 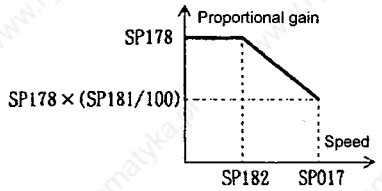 	DEC		0	r/min	0 ~ 32767
	SP183	SYNV	Synchronization match speed during spindle synchronization	The speed command error range where the synchronization speed match signal is output when changing from the speed loop to the position loop during spindle synchronization is set.	DEC	*	20	r/min	0 ~ 1000
	SP184			Not used. Set to 0.	DEC		0		~
	SP185	SINP	Spindle synchronization in-position width	The position error range where the in-position signal is output during spindle synchronization is set.	DEC	*	16	1/16deg.	1 ~ 2880
	SP186	SODR	Excessive error width during spindle synchronization	The excessive error width during spindle synchronization is set.	DEC		32767	pulse (1 pulse = 0.088deg.)	1 ~ 32767
	SP187	IQGS	Current loop gain magnification 1 during spindle synchronization	The current loop gain (torque amount) magnification during spindle synchronization is set.	DEC		100	%	1 ~ 1000
	SP188	IDGS	Current loop gain magnification 2 during spindle synchronization	The current loop gain (exciting amount) magnification during spindle synchronization is set.	DEC		100	%	0 ~ 1000
	SP189	PG2S	Position loop gain 2 during spindle synchronization	Set the No. 2 position loop gain when performing high-gain control during spindle synchronization. Set to 0 when not using.	DEC	*	0	rad/sec (1/sec)	0 ~ 999

Class	No.	Abbr.	Name	Description	TYP	CNG	Standard setting	Unit	Tolerable setting range
	SP190	PG3S	Position loop gain 3 during spindle synchronization	Set the No. 3 position loop gain when performing high-gain control during spindle synchronization. Set to 0 when not using.	DEC	*	0	rad/sec (1/sec)	0 ~ 999
	SP191 ~ SP192			Not used. Set to 0.	DEC		0		~
Synchronous tap control	SP193	SPECT	Synchronous tap specifications	This corresponds to bits and sets the synchronous tap specifications. Refer to 4.2(2) for details.	HEX		0000		0000 ~ FFFF
	SP194	VGTP	Speed loop gain proportion item during synchronous tap	The speed loop proportional gain during synchronous tap is set.	DEC		63	rad/s	0 ~ 1000
	SP195	VGT1	Speed loop gain integral item during synchronous tap	The speed loop integral gain during synchronous tap is set.	DEC		60	1/10rad/s	0 ~ 1000
	SP196	VGTD	Speed loop gain delay advance item during synchronous tap	The speed loop delay advance gain during synchronous tap is set. PI control will be applied when set to 0.	DEC		15	1/10rad/s	0 ~ 1000
	SP197			Not used. Set to 0.	DEC		0		~
	SP198	VCGT	Variable speed loop proportional gain target value during synchronous tap	The speed loop proportional gain magnification for SP194 (VGSP) in the max. motor speed set with SP017 (TSP) during synchronous tap is set.	DEC		100	%	0 ~ 100
	SP199	VCST	Variable speed loop proportional gain change start speed during synchronous tap	The speed where speed loop proportional gain change starts during synchronous tap is set. 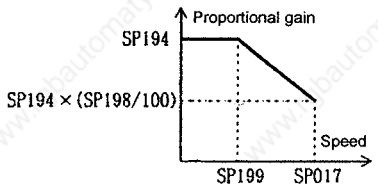	DEC		0	r/min	0 ~ 32767
	SP200	FFC1	Synchronous tap acceleration feed forward gain (Gear 1)	The acceleration feed forward gain when gear 000 is selected in the synchronous tap is set. Set when the relative position error with the Z-axis servo is large.	DEC		0	%	0 ~ 1000
	SP201	FFC2	Synchronous tap acceleration feed forward gain (Gear 2)	The acceleration feed forward gain when gear 001 is selected in the synchronous tap is set.	DEC		0	%	0 ~ 1000
	SP202	FFC3	Synchronous tap acceleration feed forward gain (Gear 3)	The acceleration feed forward gain when gear 010 is selected in the synchronous tap is set.	DEC		0	%	0 ~ 1000
	SP203	FFC4	Synchronous tap acceleration feed forward gain (Gear 4)	The acceleration feed forward gain when gear 011 is selected in the synchronous tap is set.	DEC		0	%	0 ~ 1000
	SP204 ~ SP213			Not used. Set to 0.	DEC		0		~
	SP214	TZRN	Synchronous tap zero point return speed	This is valid when SP193 (SPECT)-bitE is set to 0. The zero point return speed for when changing from the speed loop to position loop is set.	DEC	*	50	r/min	1 ~ 500
	SP215	TPDT	Synchronous tap zero point return deceleration point	This is valid when SP193 (SPECT)-bitE is set to 0. The deceleration point for when decelerating from the synchronous tap zero point return speed to the target stop point. If there is any sway when stopping, increase the value.	DEC	*	1		1 ~ 10000
	SP216	TPST	Synchronous tap zero point return shift amount	This is valid when SP193 (SPECT)-bit E is set to 0. Synchronous tap zero point is set.	DEC	*	0		1 ~ 4095
	SP217	TINP	Synchronous tap inposition width	The position error range where the in-position signal is output during synchronous tap is set.	DEC	*	16	1/16deg.	1 ~ 2880
	SP218	TODR	Excessive error width during synchronous tap	The excessive error width during synchronous tap is set.	DEC		32767	pulse (1 pulse = 0.088deg.)	1 ~ 32767
	SP219	IQGT	Current loop gain magnification 1 during synchronous tap	The current loop gain (torque amount) magnification during synchronous tap is set.	DEC		100	%	1 ~ 1000
	SP220	IDGT	Current loop gain magnification 2 during synchronous tap	The current loop gain (exciting amount) magnification during synchronous tap is set.	DEC		100	%	1 ~ 1000

Class	No.	Abbr.	Name	Description	TYP	CNG	Standard setting	Unit	Tolerable setting range
	SP221	PG2T	Position loop gain 2 during synchronous tap	Set the No. 2 position loop gain when performing high-gain control during synchronous tap. Set to 0 when not using.	DEC	*	0	rad/sec (1/sec)	0 ~ 999
	SP222	PG3T	Position loop gain 3 during synchronous tap	Set the No. 3 position loop gain when performing high-gain control during synchronous tap. Set to 0 when not using.	DEC	*	0	rad/sec (1/sec)	0 ~ 999
	SP223 ~ SP224			Not used. Set to 0.	DEC		0		~
Others	SP225	GRA5	Spindle side No. of gear teeth 5	The No. of gear teeth on the spindle side is set for gear 100.	DEC		1		1 ~ 32767
	SP226	GRA6	Spindle side No. of gear teeth 6	The No. of gear teeth on the spindle side is set for gear 101.	DEC		1		1 ~ 32767
	SP227	GRA7	Spindle side No. of gear teeth 7	The No. of gear teeth on the spindle side is set for gear 110.	DEC		1		1 ~ 32767
	SP228	GRA8	Spindle side No. of gear teeth 8	The No. of gear teeth on the spindle side is set for gear 111.	DEC		1		1 ~ 32767
	SP229	GRB5	Motor side No. of gear teeth 5	The No. of gear teeth on the motor side is set for gear 100.	DEC		1		1 ~ 32767
	SP230	GRB6	Motor side No. of gear teeth 6	The No. of gear teeth on the motor side is set for gear 101.	DEC		1		1 ~ 32767
	SP231	GRB7	Motor side No. of gear teeth 7	The No. of gear teeth on the motor side is set for gear 110.	DEC		1		1 ~ 32767
	SP232	GRB8	Motor side No. of gear teeth 8	The No. of gear teeth on the motor side is set for gear 111.	DEC		1		1 ~ 32767
	SP233 ~ SP252			Not used. Set to 0.	DEC		0		~
	SP253	DA1NO	D/A output channel 1 data No.	The output data No. for the No.1 channel in the D/A output function is set. When set to 0, the speedometer will be output. Refer to section 4.2.(4) for details.	DEC	*	0		0 ~ 32767
	SP254	DA2NO	D/A output channel 2 data No.	The output data No. for the No.2 channel in the D/A output function is set. When set to 0, the speedometer will be output.	DEC	*	0		0 ~ 32767
	SP255	DA1MPY	D/A output channel 1 magnification	The magnification of the output data for No. 1 channel in the D/A output function is set. When set to 0, the magnification will be 1. Refer to section 4.2.(4) for details.	DEC	*	0	1/256 times	0 ~ 32767
	SP256	DA2MPY	D/A output channel 2 magnification	The magnification of the output data for No. 2 channel in the D/A output function is set. When set to 0, the magnification will be 1.	DEC	*	0	1/256 times	0 ~ 32767
Motor constant	SP257 ≀ SP320	RPM ≀ BSD	Motor constant (H coil)	This is valid only in the following two cases: ① When SP034 (SFNC2) – bit0 = 1, and SP034 (SFNC2) – bit2 = 0. Set the motor constants when the special motor being used is not noted in section 4.2.(3) and is not a coil changeover motor. ② When SP034 (SFNC2) – bit0 = 1, and SP034 (SFNC2) – bit2 = 1. Set the motor constants for the H coil side on the coil changeover motor. **(Note)** The setting must not be changed by the user.	HEX		0000		0000 ~ FFFF
	SP321 ≀ SP384	RPML ≀ BSDL	Motor constant (L coil)	This is valid only in the following case: ① When SP034 (SFNC2) – bit0 = 1, and SP034 (SFNC2) – bit2 = 1. Set the motor constants for the L coil side on the coil changeover motor. **(Note)** The setting must not be changed by the user.	HEX		0000		0000 ~ FFFF

(2) Details of parameters corresponding to bits

Name	Abbr.	Description	TYP
SP033	SFNC1	F E D C B A 9 8 7 6 5 4 3 2 1 0 sftk dfmt 1a2m [1a2m] 1-amplifier 2-motor function (0: invalid/1: valid) [dfmt] Default motor (0: main/1: sub) [sftk] SF-TK card validity (0: invalid/1: valid)	HEX setting
SP034	SFNC2	F E D C B A 9 8 7 6 5 4 3 2 1 0 mkch invm mtsl [mtsl] Motor constant (0: standard/1: special) [invm] General-purpose motor function (0: invalid/1: valid) [mkch] Coil changeover function (0: invalid/1: valid)	HEX setting
SP035	SFNC3	F E D C B A 9 8 7 6 5 4 3 2 1 0 lbsd hbsd lwid hwid [hwid] High-speed coil wide constant output (0: invalid/1: valid) [lwid] Low-speed coil wide constant output (0: invalid/1: valid) [hbsd] High-speed coil base slide (0: invalid/1: valid) [lbsd] Low-speed coil base slide (0: invalid/1: valid)	HEX setting

Name	Abbr.	Description	TYP
SP036	SFNC4	F E D C B A 9 8 7 6 5 4 3 2 1 0 dslm dssm enc2 enc1 mag2 mag1 plg2 plg1 The control method for the 1-amplifier 2-motor use is set. [plg1] PLG for motor 1 (0: valid/1: invalid) [plg2] PLG for motor 2 (0: valid/1: invalid) [mag1] MAG for motor 1 (0: valid/1: invalid) [mag2] MAG for motor 2 (0: valid/1: invalid) [enc1] ENC for motor 1 (0: valid/1: invalid) [enc2] ENC for motor 2 (0: valid/1: invalid) [dssm] Speedometer output (0: Output/1: Do not output) [dslm] Load meter output (0: Output/1: Do not output)	HEX setting
SP037	SFNC5	F E D C B A 9 8 7 6 5 4 3 2 1 0 nstv plgo mago enco The orientation position detector, etc. is set. [enco] Encoder orientation [mago] Magnesensor orientation [plgo] PLG orientation **Note:** Do not set two or more of bits 0 to 2 to "1" at the same time. [nstv] No signal detection type (0: constant monitor/ 1: only during position loop or orientation)	HEX setting
SP038	SFNC6	F E D C B A 9 8 7 6 5 4 3 2 1 0 open plg2 alty [alty] Deceleration stop during alarm (0: invalid/1: valid) .. Note, only during specific alarms [plg2] Semi-closed pulse output signal × 2 (0: invalid (1 time)/1: valid (2 times)) [open] Open loop operation (0: invalid/1: valid)	HEX setting

Name	Abbr.	Description	TYP
SP097	SPECO	F E D C B A 9 8 7 6 5 4 3 2 1 0 mdir fdir pyfx dmin odi2 odi1 Orientation control [odi2, odi1] Orientation rotation direction 0 0 Pre (Orientation in rotating direction during speed control) 0 1 Orientation from motor forward run direction 1 1 Orientation from motor reverse run direction 1 1 (Inhibit) [dmin] Dummy in-position (0: invalid/1: valid) [pyfx] Excitation fixed during orientation servo lock (0: invalid/1: valid) [fdir] Encoder detector polarity (0:(+)/1:(–)) [mdir] Magnesensor detector polarity (0:(+)/1:(–))	HEX setting
SP129	SPECC	F E D C B A 9 8 7 6 5 4 3 2 1 0 zrtn ptyp fb9x zdir ztyp fdir pyfx C-axis control [pyfx] Position loop excitation fixing (0: invalid/1: valid) [fdir] Position detector polarity (0:(+)/1:(–)) [ztyp] Z-phase detection type (0: standard/1: special) [zdir] Z-phase detection polarity (0: start up fixed/1: fall fixed) (Valid only when ztyp=1) [fb9x] Speed feedback during C-axis (0: PLG ... OSE 90K/1: 90,000 pulse detector ... MBE90K, MHE90K) [ptyp] Position control changeover type (0: after zero point return/1: after deceleration stop) [zrtn] Zero point return direction (0:CCW/1:CW)	HEX setting

Name	Abbr.	Description	TYP
SP177	SPECS	F E D C B A 9 8 7 6 5 4 3 2 1 0 odl fdir pyfx adin fclx Spindle synchronous control [fclx] Semi-closed loop control (0: invalid/1: valid) [adin] Insertion compensation (0: invalid/1: valid) .. Note, valid only when gear ratio 1:1 [pyfx] Position loop excitation fixing (0: invalid/1: valid) [fdir] Position detector polarity (0:(+)/1:(–)) [odl] Excessive error width magnification (0: 1 time/1: 8 times)	HEX setting
SP193	SPECT	F E D C B A 9 8 7 6 5 4 3 2 1 0 zrtn ptyp odl fdir cdir pyfx adin fclx Synchronous tap control [fclx] Semi-closed loop control (0: invalid/1: valid) [adin] Insertion compensation (0: invalid/1: valid) .. Note, valid only when gear ratio 1:1 [pyfx] Position loop excitation fixing (0: invalid/1: valid) [cdir] Command polarity (0:CCW/1:CW) [fdir] Position detector polarity (0:(+)/1:(–)) [odl] Excessive error width magnification (0: 1 time/1: 8 times) [ptyp] Position control changeover type (0: after zero point return/1: after deceleration stop) [zrtn] Zero point return direction (0:CCW/1:CW)	HEX setting

(3) Motor type and power supply type selection parameters

Motor type

SP040 (MTYP)

Parameter setting	Motor model name	Max. speed	Corresponding amplifier
0000			
0001	SJ-2.2A	10000r/min	SP-22
0002	SJ-3.7A	10000r/min	SP-37
0003	SJ-5.5A	8000r/min	SP-55
0004	SJ-7.5A	8000r/min	SP-75
0005	SJ-11A	6000r/min	SP-110
0006	SJ-15A	6000r/min	SP-150
0007	SJ-18.5A	6000r/min	SP-185
0008	SJ-22A	4500r/min	SP-220
0009	SJ-26A	4500r/min	SP-260
000A	SJ-30A	4500r/min	SP-300
000B			
000C			
000D			
000E			
000F			
0010			
0011	SJ-N0.75A	10000r/min	SP-075
0012	SJ-N1.5A	10000r/min	SP-15
0013	SJ-N2.2A	10000r/min	SP-22
0014	SJ-N3.7A	10000r/min	SP-37
0015	SJ-N5.5A	8000r/min	SP-55
0016	SJ-N7.5A	8000r/min	SP-75
0017			
0018			
0019			
001A			
001B	SJ-J2.2A	10000r/min	SP-22
001C	SJ-J3.7A	10000r/min	SP-37
001D	SJ-J5.5A	8000r/min	SP-55
001E	SJ-J7.5A	8000r/min	SP-75
001F			

(Note) The above motor selection is valid only when SP034 (SFNC2) -bit0 is set to 0.

Power supply type

SP041 (PTYP)

Parameter setting	Power supply type
0000	Not connected
0004	CV-37
0006	CV-55
0008	CV-75
0011	CV-110
0015	CV-150
0019	CV-185
0022	CV-220
0026	CV-260
0030	CV-300

(Note) When using external emergency stop with MDS-B-CV, add 40 to the above setting value and set.

Example)
When using external emergency stop with CV-260:
The setting is 0026 + 0040 = 0066

(4) D/A output function

1) Outline
The MDS-A-SP and MDS-B-SP has a D/A output function in the standard system.
The drive unit state and each data can be confirmed with this D/A output function.

2) Hardware specifications
- 2 channel
- 8 bits 0 to +10V
- Output pins { CH1 : CN9-9 pins / CH2 : CN9-19 pins / GND : CN9-1.11 pins

3) Parameters
Set the data No. and output magnification for each channel with the following parameters.

No.	Abbr.	Name
SP253	DA1NO	DA channel 1 data No.
SP254	DA2NO	DA channel 2 data No.
SP255	DA1MPY	DA channel 1 data magnification
SP256	DA2MPY	DA channel 2 data magnification

4) Data output No.
Set the No. of the data to be D/A output in SP253 and SP254.
The output data and data No. correspondence is shown below.

No. (=parameter setting value)	CH1		CH2	
	Output data	Unit	Output data	Unit
0	Speedometer output	Max. speed at 10V	Load meter output	120% load at 10V
2	Current command	100% conversion when actual data = 4096	Same as CH1	
3	Current feedback	100% conversion when actual data = 4096		
4	Speed feedback	Actual data r/min		
6	Position droop low-order	Interpolation unit (360° conversion when actual data = 23040000.)		
7	Position droop high-order			
8	Position F△t low-order	Interpolation unit/NC communication cycle		
9	Position F△t high-order			
10	Position command low-order	Interpolation unit (360° conversion when actual data = 23040000.)		
11	Position command high-order			
12	Feedback position low-order	Interpolation unit (360° conversion when actual data = 23040000.)		
13	Feedback position high-order			
80	Control input 1	Corresponding to bit		
81	Control input 2			
82	Control input 3			
83	Control input 4			
84	Control output 1	Corresponding to bit		
85	Control output 2			
86	Control output 3			
87	Control output 4			

(Note) The current command and current feedback % refers to 30 min. rating = 100%.

5) Setting of output magnification
The output magnification of the data to be D/A output is set in SP255 and SP256.
If,

$$\text{DATA} = \text{actual data} \times \frac{\text{SP255 or SP256}}{256}$$

① The output data other than speedometer output and load meter output will be D/A output as shown in Fig. 1.
② The speedometer output and load meter output data will be D/A output as shown in Fig. 2.

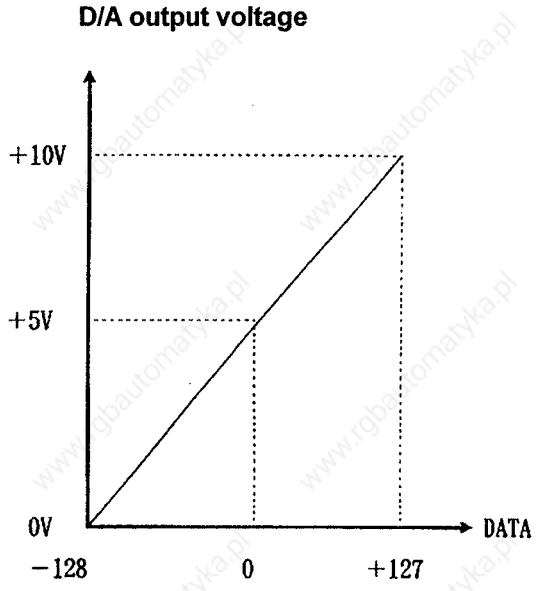

Fig. 1

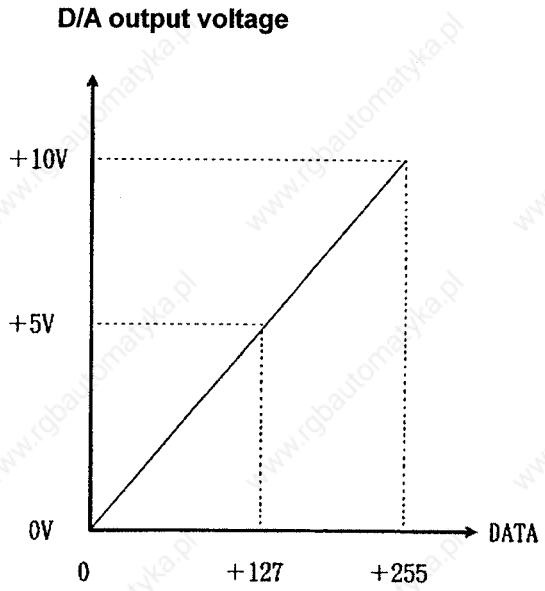

Fig. 2

(Example 1) Current command, current feedback.

The data unit is 100% conversion when the actual data = 4096.
Thus, the actual data = 4096 × 1.2 =4915 will be output when the current feedback is +120%.
If parameter SP255 (SP256) is set to 256 (magnification = 1), the D/A output voltage will be the following, according to Fig. 1.

D/A output voltage = 5V + {4915 × 1 × (5V/128)} = 197V > 10V

Thus, the D/A output voltage maximum value will be exceeded.
In this case, if parameter SP255 (SP256) is set to 6, the D/A output voltage will be as follows:

D/A output voltage = 5V + {4915 × 6/256 × (5V/128)} = 9.5V > 10V

Thus, the data can be confirmed.

(Example 2) Speed feedback

The data unit is r/min (rpm).
Thus, at a motor rotation of +2000r/min, the actual data = 2000 will be output.
If parameter SP255 (SP256) is set to 256 (magnification = 1), the D/A output voltage will be the following, according to Fig. 1.

D/A output voltage = 5V + {2000 × 1 × (5V/128)} = 83.125V > 10V

Thus, the D/A output voltage maximum value will be exceeded.
In this case, if parameter SP255 (SP256) is set to 16, the D/A output voltage will be as follows:

D/A output voltage = 5V + {2000 × 16/256 × (5V/128)} = 9.88V > 10V

Thus, the data can be confirmed.

(Example 3) Position droop

The data unit is 360° conversion when the actual data = 23040000.
Thus, during a +0.1° position droop, the actual data = 0.1 × 23040000/360=6400 will be output.
If parameter SP255 (SP256) is set to 256 (magnification = 1), the D/A output voltage will be the following, according to Fig. 1.

D/A output voltage = 5V + {6400 × 1 × (5V/128)} = 255V > 10V

Thus, the D/A output voltage maximum value will be exceeded.
In this case, if parameter SP255 (SP256) is set to 5, the D/A output voltage will be as follows:

D/A output voltage = 5V + {6400 × 5/256 × (5V/128)} = 9.88V > 10V

Thus, the data can be confirmed.

(Example 4) To confirm the orientation complete signal (ORCF) at control output 4L.

The data unit is data corresponding to bits.
Refer to section 4.4 for the meanings of the control output 4L bit corresponding signals.
The orientation complete signal (ORCF) corresponds to bit 4 of control output 4L.
Thus, if ORCF is ON, the actual data = 2^4 = 16 corresponding to bit 4 will be output.
If parameter SP255 (SP256) is set to 256 (magnification = 1), the D/A output voltage will be the following, according to Fig. 1.

D/A output voltage = 5V + {16 × 1 × (5V/128)} = 5.625V > 10V

Thus, the data can be confirmed.
However, if a bit other than bit 4 is ON, the voltage of that bit will be added to 6.25V above, so when measuring the actual ORCF signal, it is confirmed with the (5.625V–5V) = 0.625V changed voltage.

4.3 Spindle specification parameters screen

The spindle parameters are divided into those transmitted to the spindle drive unit from the NC and those used on the NC side.

(1) Parameters transmitted to the spindle drive unit from the NC

The 384 parameters shown in section 4.2.(1) are those transmitted from the NC to the spindle drive unit.

(2) Parameters used on NC side

The spindle specifications parameters shown on this page are used on the NC side.

[SP-NC PARAM]

#					
1	slimt1	320	17	stapt1	110
2	2	790	18	2	510
3	3	4000	19	3	1200
4	4	0	20	4	0
5	smax 1	320	21	sori	0
6	2	790	22	sgear	0
7	3	4000	23	smini	100
8	4	0	24	serr	0
9	ssift1	0	25	sname	0
10	2	0	26		
11	3	0	27	senc_pno	0
12	4	0	28	sana_pno	0
13	stap 1	250	29	spfig	0
14	2	527	30	senc_no	0
15	3	2640	31	sana_no	0
16	4	0	32	smcp_no	0

#( ) DATA ( )

No.	Item		Description	Setting range (unit)
1 2 3 4	slimt 1 2 3 4	Speed limit	For GEAR 00 GEAR 01 GEAR 10 GEAR 11 } spindle speed with motor at maximum speed is set.	0 ~ 99999 (r/min)
5 6 7 8	smax 1 2 3 4	Max. speed	For GEAR 00 GEAR 01 GEAR 10 GEAR 11 } maximum spindle speed is set. Set slimit ≥ smax.	0 ~ 99999 (r/min)
9 10 11 12	ssift 1 2 3 4	Shift speed	For GEAR 00 GEAR 01 GEAR 10 GEAR 11 } spindle speed for gear shift is set.	0 ~ 32767 (r/min)
13 14 15 16	stap 1 2 3 4	Tap speed	For GEAR 00 GEAR 01 GEAR 10 GEAR 11 } maximum spindle speed during constant inclination tap cycle is set.	0 ~ 99999 (r/min)
17 18 19 20	stapt 1 2 3 4	Tap time constant	For GEAR 00 GEAR 01 GEAR 10 GEAR 11 } the time constant to the maximum tap speed during constant inclination tap cycle is set.	0 ~ 5000 (msec)
22	sgear	Encoder gear ratio	Gear ratio between spindle gear and encoder gear is set.	0 : 1/1 1 : 1/2 2 : 1/4 3 : 1/8
23	smini	Min. speed	The min. spindle speed is set. Even if an S-command lower than this value is input, the spindle will rotate at this speed.	0 ~ 32767 (r/min)

4.4 Spindle monitor screen

The current state of the spindle can be confirmed on the NC screen.
The monitor screen is shown on this page.

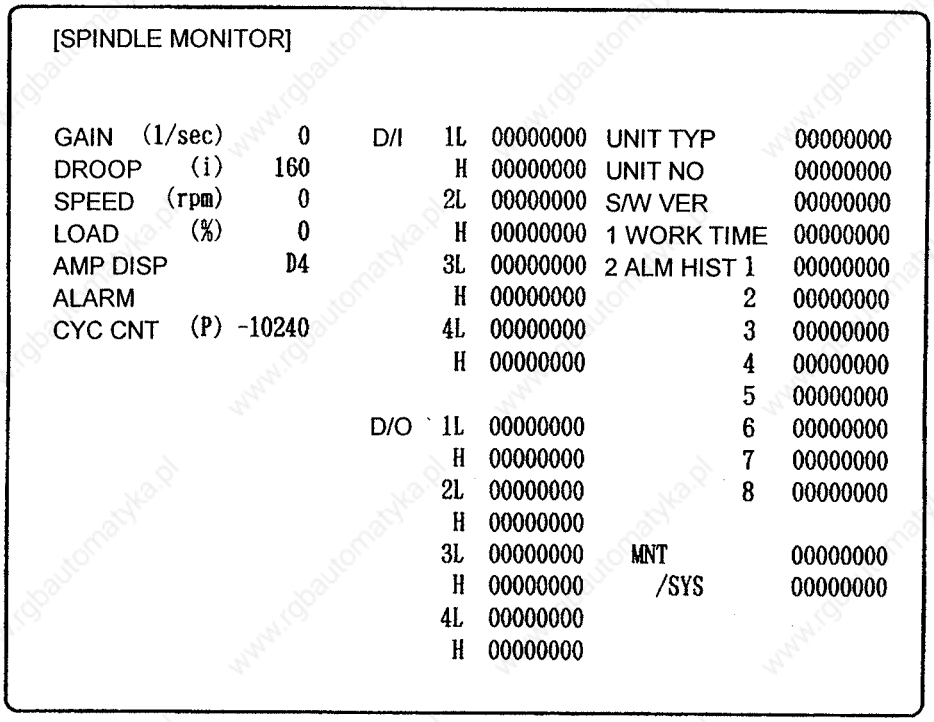

Data	Unit	Display details
GAIN	1/sec.	The position loop gain during operation of the spindle with the position command is display.
DROOP	pulse	The position deflection during operation of the spindle with the position command is displayed.
SPEED	rpm	The motor speed is displayed.
LOAD	%	The motor load (load ratio) is displayed. The 30 min. rating is 100%.
AMP DISP		The data of the 7-segment display for the spindle drive unit is displayed.
ALARM		The alarm No. is displayed when an alarm other than that displayed on the spindle drive unit's 7-segment LED.
CYC CNT		The current position from the position detector's reference position (Z-phase) when operating the spindle with the position command is displayed.
D/I 1L H		The control input signal 1 input from the NC to the spindle drive unit is displayed in correspondence to the bits. (Refer to section (1-1) for details.)
D/I 2L H		Same as above (control input signal 2)
D/I 3L H		Same as above (control input signal 3)
D/I 4L H		Same as above (control input signal 4)
D/O 1L H		The control output signal 1 output from the spindle drive unit to the NC is displayed in correspondence to the bits. (Refer to section (2-1) for details.)
D/O 2L H		Same as above (control output signal 2)
D/O 3L H		Same as above (control output signal 3)
D/O 4L H		Same as above (control output signal 4)
UNIT TYP		The spindle drive unit type is displayed.
UNIT NO		The spindle drive unit manufacturing No. is displayed.
S/W VER		The main software version in the spindle drive unit is displayed.
1 WORK TIME		The cumulative working time of the spindle drive unit is displayed.
2 ALM HIST 1~8		The alarm history is displayed. 1 is the latest alarm.

(1-1) D/I (Control input) 1L

H

F	E	D	C	B	A	9	8	7	6	5	4	3	2	1	0
G1				TL3	TL2	TL1	ALMR	PRM						SRV	RDY

bit	Name	Description
0	RDY	Ready ON command
1	SRV	Servo ON command
2		
3		
4		
5		
6	PRM	Parameter conversion command
7	ALMR	Servo alarm reset command
8	TL1	Torque limit 1
9	TL2	Torque limit 2
A	TL3	Torque limit 3
B		
C		
D		
E		
F	G1	Cutting

(1-2) D/I (Control input) 2L

H

F	E	D	C	B	A	9	8	7	6	5	4	3	2	1	0

* Not used at this time.

(1-3) D/I (Control input) 3L

H

F	E	D	C	B	A	9	8	7	6	5	4	3	2	1	0
	MS	LCS	ORC	WRI	WRN	SRI	SRN	GR3	GR2	GR1	SC5	SC4	SC3	SC2	SC1

bit	Name	Description
0	SC1	Spindle control mode selection command 1
1	SC2	Spindle control mode selection command 2
2	SC3	Spindle control mode selection command 3
3	SC4	Spindle control mode selection command 4
4	SC5	Spindle control mode selection command 5
5	GR1	Gear selection command 1
6	GR2	Gear selection command 2
7	GR3	Gear selection command 3
8	SRN	Forward run start command
9	SRI	Reverse run start command
A	WRN	Index forward run command
B	WRI	Index reverse run command
C	ORC	Orient start command
D	LCS	L coil selection command (during coil changeover)
E	MS	Sub-motor selection command (during 1-amplifier 2-motor changeover)
F		

(1-4) D/I (Control input) 4L H

F	E	D	C	B	A	9	8	7	6	5	4	3	2	1	0

* Not used at this time.

(2-1) D/O (Control output) 1L H

F	E	D	C	B	A	9	8	7	6	5	4	3	2	1	0
	INP	ZFIN			TL3A	TL2A	TL1A	ALM	PRM		WRN			SON	RON

bit	Name	Description
0	RON	In ready ON
1	SON	In servo ON
2		
3		
4	WRN	In drive unit warning
5		
6		
7	ALM	In alarm
8	TL1A	In torque limit 1
9	TL2A	In torque limit 2
A	TL3A	In torque limit 3
B		
C		
D	ZFIN	Z-phase passed
E	INP	In position loop in-position
F		

(2-2) D/O (Control output) 2L H

F	E	D	C	B	A	9	8	7	6	5	4	3	2	1	0

* Not used at this time.

(2-3) D/O (Control output) 3L

H

F	E	D	C	B	A	9	8	7	6	5	4	3	2	1	0
	MSA	LCSA	ORCA	WRIA	WRNA	SRIA	SRNA	GR3A	GR2A	GR1A	SC5A	SC4A	SC3A	SC2A	SC1A

bit	Name	Description
0	SC1A	In spindle control mode selection command 1
1	SC2A	In spindle control mode selection command 2
2	SC3A	In spindle control mode selection command 3
3	SC4A	In spindle control mode selection command 4
4	SC5A	In spindle control mode selection command 5
5	GR1A	In gear selection command 1
6	GR2A	In gear selection command 2
7	GR3A	In gear selection command 3
8	SRNA	In forward run start command
9	SRIA	In reverse run start command
A	WRNA	In index forward run command
B	WRIA	In index reverse run command
C	ORCA	In orientation start command
D	LCSA	In L coil selection command (during coil changeover)
E	MSA	In sub-motor selection command (during 1-amplifier 2-motor changeover)
F		

(2-4) D/O (Control output) 4L

H

F	E	D	C	B	A	9	8	7	6	5	4	3	2	1	0
								WRCF	MKC	SYSA	ORCF	ZS	US	SD	CD

bit	Name	Description
0	CD	Current detection
1	SD	Speed detection
2	US	Speed reached
3	ZS	Zero speed
4	ORCF	Orientation complete
5	SYSA	Synchronous speed match
6	MKC	In coil changeover
7	WRCF	Index positioning complete
8		
9		
A		
B		
C		
D		
E		
F		

4.5 Alarm and warning table

Alarm No.	Abbr.	Name	Details	Operation (Note)
12	ME1	Memory error 1	A check sum or RAM check error occurred in the spindle drive control card ROM.	PR
13	SWE	Software process error	The software data process did not end within the set time.	PR
17	ADE	AD error	The current detection AD converter did not function correctly during initialization.	PR
21	NS2	No signal (spindle encoder)	The signal was not input from the spindle encoder (for orientation, C axis), or was not at the normal level.	PR
23	OSE	Excessive speed deflection	The speed command and motor speed deflection exceeded the specified value and the state continued for a specified time.	PR
31	OS	Overspeed	The motor speed exceeded 115% of the set max. speed.	PR
32	PMOC	Power module overcurrent	A current exceeding the set value flowed into the IPM used in the spindle drive's main circuit.	PR
34	DP	CRC error	A CRC error occurred in the communication data from the NC.	PR
35	DE	Data error	The movement command from the NC was excessively large during position control.	PR
36	TE	Transmission error	The periodic data transmission from the NC was terminated.	PR
37	PE	Parameter error	A parameter value exceeding the tolerable value was set.	PR
38	TP1	Protocol error 1	There was a protocol error in the communication with the NC. (Frame error)	PR
39	TP2	Protocol error 2	There was a protocol error in the communication with the NC. (Information error)	PR
3B	PMOH	Power module overheat	Overheating of the IPM used in the servo drive's main circuit was detected.	PR
40	KE1	TK unit change error	The changeover signal procedure was incorrect when using the TK unit.	PR
41	KE2	TK unit communication error	The communication with the TK unit was not correct when using the TK unit.	PR
44	CAXE	C axis changeover alarm	When using the coil changeover motor, the C axis was controlled with the H coil.	NR
46	OHM	Motor overheat	Overload, or the motor cooling blower stop and the motor overheated causing the built-in thermal protector to function.	NR
50	OL	Overload	The motor current flowed for a time exceeding the overload time constant of the overload detection level.	NR
52	OD	Excessive error	The position tracking error was over the specified value in the position loop operation.	NR
5C	ORFE	Orientation feedback error	When the orientation in-position was completed, the pulse miss value was higher than the parameter setting value (SP114:OPER).	NR
60~7F	–	—	An alarm occurred in the power supply.(Refer to the section on the power supply for details.)	–
82	NSP	Power supply no signal	Breakage or incorrect connection of the cable connected to the power supply was detected.	PR
E1	WOL	Overload warning	The motor current flowed at 80% or more of the detection time constant for a time exceeding the overload detection level.	AR
E7	NCE	NC emergency stop	The emergency stop command is input from the CNC.	PR

Note) If the above protective functions activate, the alarm No. will be displayed on the 7-segment LED built into the spindle drive, and the following will occur.

- Operation PR : The base current of the spindle drive will be shut off, the external contactor will turn OFF, and the spindle motor will coast to a stop.
- Operation NR : The spindle motor will decelerate and stop with the regenerative braking, and then the base current will be shut off.
- Operation AR : Only a warning will display, and operation can be continued.

5. Optional Specifications and Parts

⚠ WARNING
Always wait at least 10 minutes after turning the power OFF before connecting options or peripheral devices. Failure to observe this could lead to electric shocks.

⚠ CAUTION
Always use the designated peripheral devices and options. Failure to observe this could lead to faults or fires.

5.1 Orientation specifications (optional)

The following three types of orientation specifications are available:

(1) 1-point orientation using magnesensor
(2) 4096-point orientation using encoder
(3) 4096-point orientation using motor built-in encoder

5.1.1 1-point orientation using magnesensor

(1) Connection

Refer to "1.4 configuration" for the connection of the magnesensor and spindle drive unit.

(2) Magnet and detection head installation direction

The magnet and detection head should be installed in the specified orientation.

Standard type and high speed standard type
..... The center reference hole of magnet and the reference notch of detection head should come to the same side.
Refer to CASE 1 , CASE 2 , CASE 3 and UNACCEPTABLE EXAMPLE 1.

High-speed small type
..... The reference notch of detection head should be positioned in reference with polarity (N, S) of magnet.
Refer to CASE 4 , CASE 5 and UNACCEPTABLE EXAMPLE 2 .

High-speed ring type
..... The reference notch of detection head should be positioned in reference with polarity (N, S) of magnet.
Refer to CASE 6 , CASE 7 and UNACCEPTABLE EXAMPLE 3 .

CASE 1 Magnet is installed on the circumferential surface of rotating body. (Circumferential mounting)
The reference hole of magnet and the reference notch of detection head should come to the opposite drive side, as shown below.

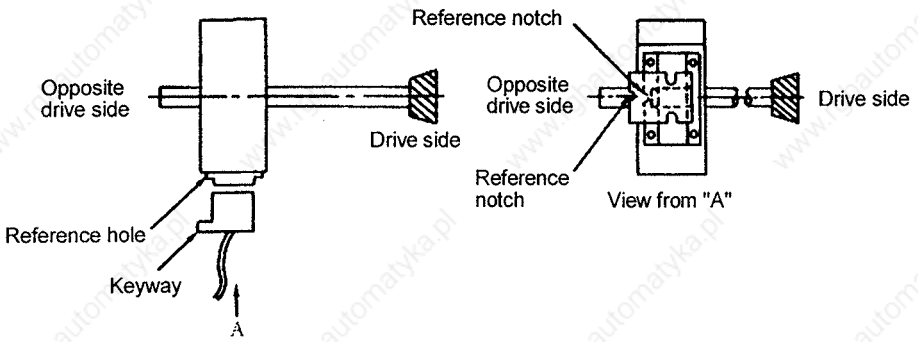

Magnet is installed on circumferential surface of rotating body.

CASE 2 Magnet is installed on the front or back flat surface of rotating disk.(Flat mounting)

(1) When the magnet is installed on the opposite drive side of spindle, the reference hole of magnet and reference notch of detection head should face inward, as shown below.

(2) When the magnet is installed on the drive side of spindle, the reference hole of magnet and reference notch of detection head should face outward, as shown below.

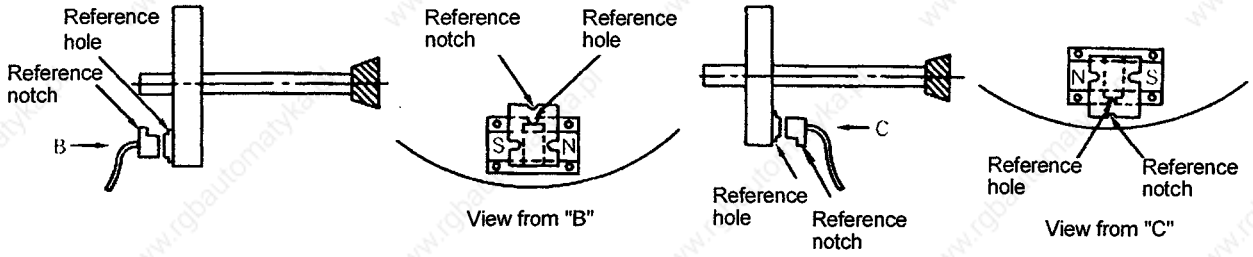

Magnet is installed on the opposite drive side. **Magnet is installed on the drive side.**

CASE 3 In regard to CASE 1 , the magnet and detection head can be changed to the following position as long as the reference hole and reference notch are aligned. With this, normal orientation can be carried out.
(However, the parameter SP097 orientation detector installation direction bit must be changed in this case.)

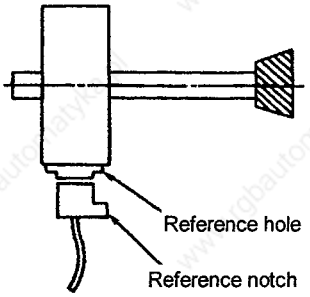

UNACCEPTABLE EXAMPLE 1

If the magnet reference hole and detection head reference notch are not aligned, intense vibration will occur when the detection head is at end of magnet, and orientation is impossible.

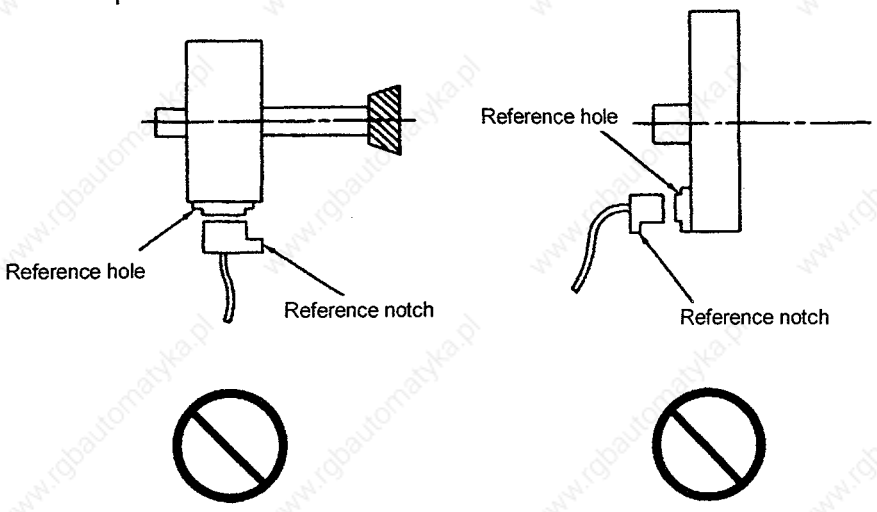

CASE 4 Magnet is installed on the circumferential surface of rotating disk. (Circumferential mounting)
The detection head reference notch should be on the opposite drive side and the magnet should be installed in the polarity shown below.

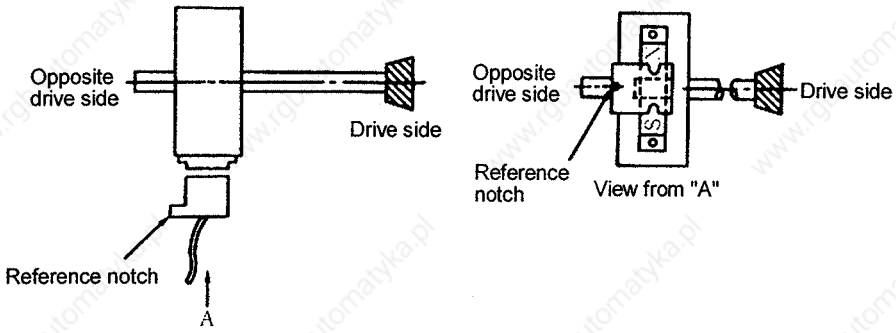

Magnet is installed on the circumferential surface of rotating disk.

CASE 5 As long as the relation between location of the detection head reference notch and the polarity of the magnet are aligned, the detection head and the magnet can be installed as shown below in CASE 4, and normal orientation can be carried out.
(However, the parameter SP097 orientation detector installation direction bit must be changed in this case.)

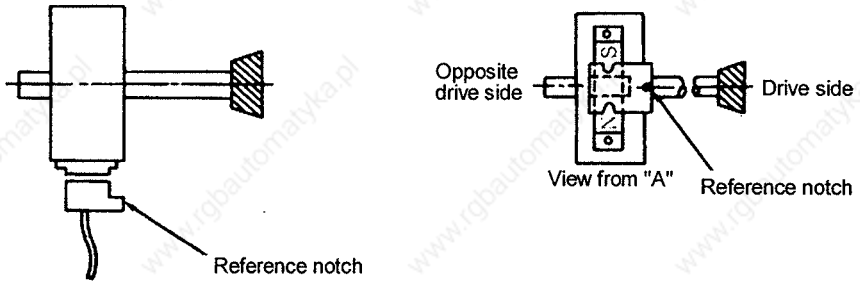

UNACCEPTABLE EXAMPLE 2

If the detection head reference notch is not aligned properly in reference to polarity of the magnet, intense vibration occurs when the detection head is at the end of the magnet, and orientation is impossible.

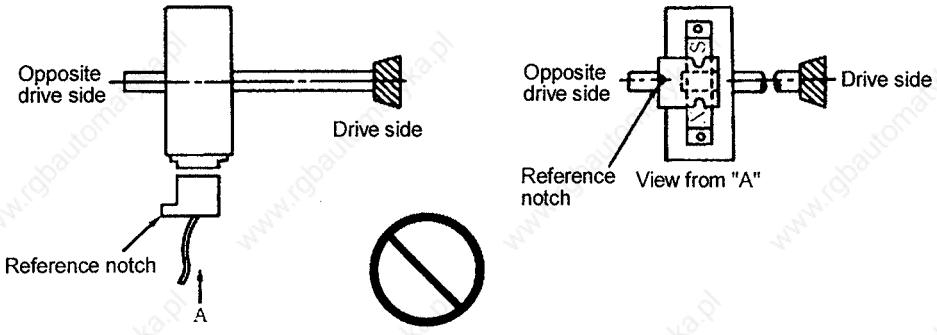

In this example, polarity (N, S) of magnet is inverse to that in CASE 4.

CASE 6 The sensor head reference notch is on the opposite drive side of spindle and the polarity of the magnet is as shown below.

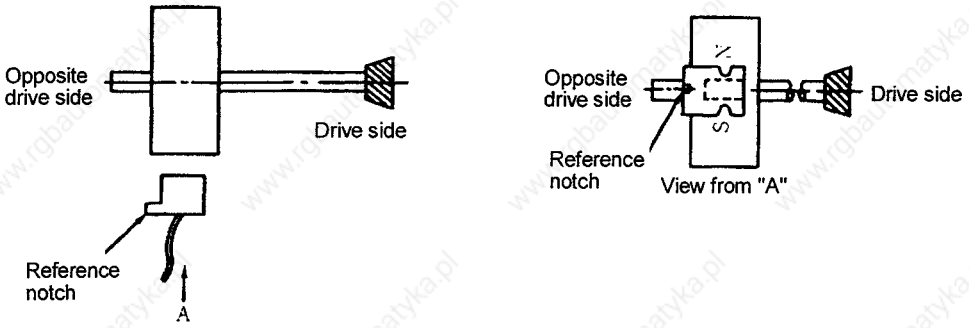

CASE 7 As long as the relation between location of sensor head reference notch and the polarity of the magnet are aligned, the sensor head and the magnet can be installed as shown below in CASE 4 , and normal orientation can be carried out.
(However, the parameter SP097 orientation detector installation direction bit must be changed in this case.)

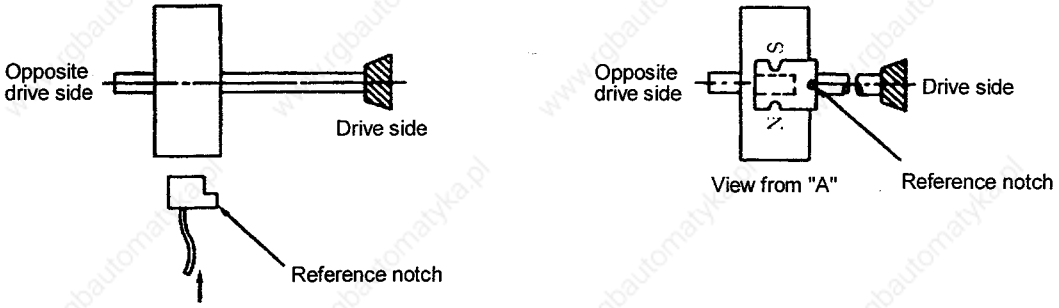

UNACCEPTABLE EXAMPLE 3

If the sensor head reference notch is not aligned properly in reference to polarity of the magnet, intense vibration occurs when the sensor head is at the end of the magnet, and orientation is impossible.

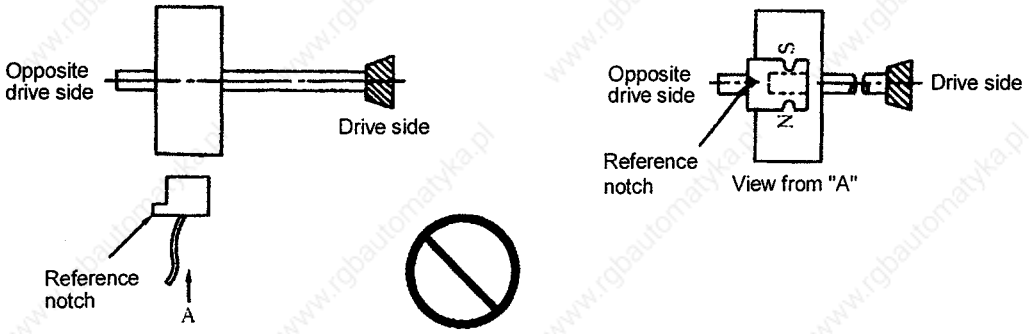

In this example, polarity (N, S) of magnet is inverse to that in CASE 4.

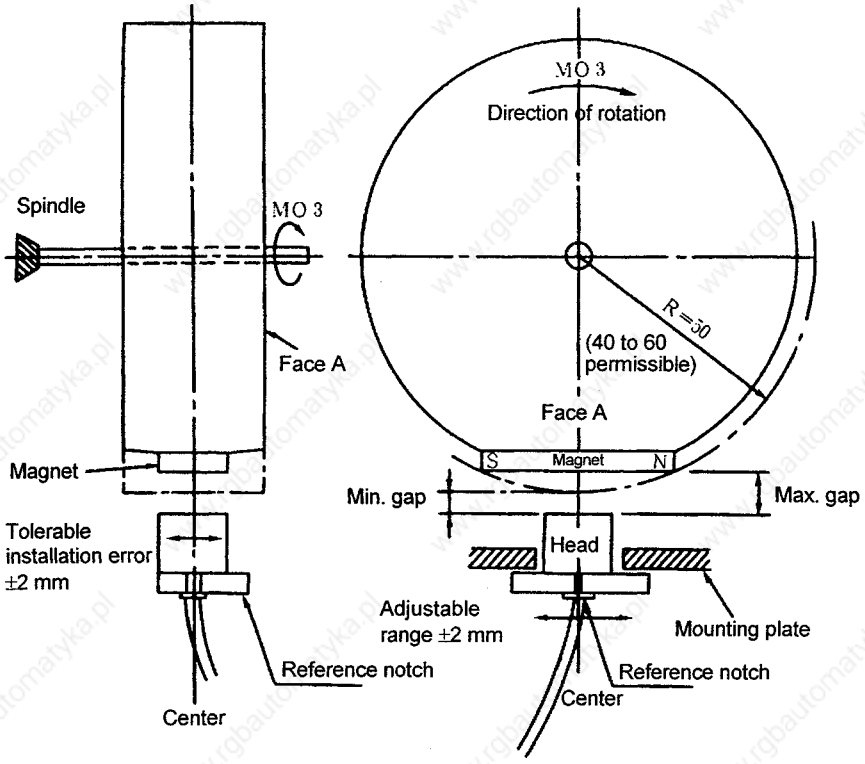

Table 1

	BKO-C1810H03 Standard		BKO-C1730H06 High speed standard	
Radius (R) mm	Max. gap mm	Min. gap mm	Max. gap mm	Min. gap mm
40	11.5 ± 0.5	2.7 ± 0.5	10 ± 0.5	1.22 ± 0.5
50	9.5 ± 0.5	2.8 ± 0.5	8 ± 0.5	1.31 ± 0.5
60	8.5 ± 0.5	3.0 ± 0.5	7 ± 0.5	1.5 ± 0.5
70	8.0 ± 0.5	3.4 ± 0.5	7 ± 0.5	2.38 ± 0.5

Table 2

	BKO-C1810H03 Standard	BKO-C1730H06 High speed standard
Radius (R) mm	Gap mm	Gap mm
40	6 ± 0.5	5 ± 0.5
50	6 ± 0.5	5 ± 0.5
60	6 ± 0.5	5 ± 0.5

Table 3

	BKO-C1730H09 High speed standard	
Radius (R) mm	Max. gap mm	Min. gap mm
40	6.25 ± 0.5	3.3 ± 0.5
50	6.0 ± 0.5	3.7 ± 0.5
60	5.75 ± 0.5	3.85 ± 0.5
70	5.5 ± 0.5	3.87 ± 0.5

(3) Caution on installation of magnet

When the magnet is installed to the spindle, pay attention to the following:

1) Do not place an intense magnetic source near the magnet.
2) Carefully handle the magnet, avoiding mechanical shock to the magnet.
3) Secure the magnet to the spindle with M4 screws.
4) After the magnet is installed, balance the entire spindle.
5) Align the center of the magnet (between N and S) with the center line of the rotating disk on the spindle.

   (The position relation should be as shown in CASE 1 to CASE 7 on the previous pages.)
6) Keep the magnet and its peripheral clean of from iron paritcles (iron particles may caused malfunction).
7) Apply lock paint, or other suitable means, to prevent installation screws from becoming loose.
8) If the magnet is installed on a ground rotating disk, demagnetize the disk.
9) Diameter of rotating disk on which the magnet is installed should be within the range from 80mm to 120mm.
10) If speed of the spindle on which the magnet is installed exceeds 6000r/min, use a high-speed type magnet (applicable up to 12000r/min of speed). If speed exceeds 12000r/min, use a ring type magnet.
11) When installing the magnet on a rotating body plane, keep the speed below 6,000r/min.

(4) Caution on installation of sensor

Observe the following cautions when installing the sensor.

1) The position relation of the magnet and sensor head should follow CASE 1 to CASE 7 .
2) The center line of sensor head should be in line with the center of magnet.
3) The gap between the magnet and sensor head should be as follows:
   - Table 1 on previous page when using standard magnet and installation CASE 1 or CASE 3
   - Table 1 on previous page when using high-speed standard magnet and installation CASE 1 or CASE 3
   - Table 2 on previous page when using standard magnet and installation CASE 2
   - Table 2 on previous page when using high-speed standard magnet and installation CASE 2
   - Table 3 on previous page when using high-speed compact magnet and installation CASE 1 or CASE 3
   - An example of the high-speed ring magnet is shown in the outline drawing in section 5.1.1 (5).
     * Manufacturing a jig is recommended for mass production.
4) Connector used in amplifier
   BKO-C1810 : Oil proof-type
   BKO-C1730 : Not oil proof-type
   Install both type at a place not subject to oil.
5) The cable between the amplifier and the controller should be laid down apart from high-voltage cables.
6) Check the connector wiring, securely engage the receptacle and tighten connector lock screws.

(5) Magnesensor orientation parts (Optionally supplied parts)

Select the combination of the magnesensor parts for magnesensor orientation from the table below.

Type	Permissible speed [rpm]	Model	Combination		
			Amplifier	Sensor	Magnet
Standard	0 ~ 6000	MAGSENSOR BKO-C1810H01~3	H01	H02	H03
High-speed standard	0 ~ 12000	MAGSENSOR BKO-C1730H01.2.6	H01	H02	H06
High-speed small	0 ~ 12000	MAGSENSOR BKO-C1730H01.2.9	H01	H02	H09
High-speed ring	0 ~ 25000	MAGSENSOR BKO-C1730H01.2.11	H01	H02	H41
High-speed ring	0 ~ 25000	MAGSENSOR BKO-C1730H01.2.12	H01	H02	H42
High-speed ring	0 ~ 30000	MAGSENSOR BKO-C1730H01.2.13	H01	H02	H43
High-speed ring	0 ~ 30000	MAGSENSOR BKO-C1730H01.2.14	H01	H02	H44

Outline dimensions:

● **Amplifier H01**

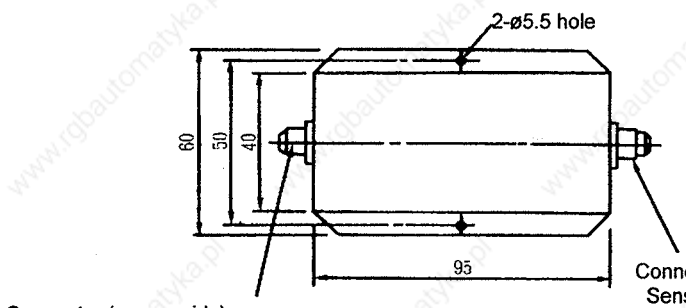

Connector (sensor side)
For BKO-C1810H01, R04-R-8F is used.
For BKO-C1730H01, TRC116-21A10-7F is used.

Connector (controller cable side)
Sensor : TRC116-21A10-7M
Cable : TRC116-12A10-7F10.5

● **Sensor H02**

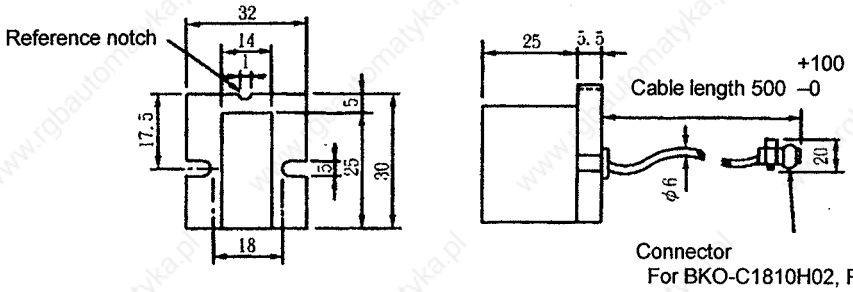

Connector
For BKO-C1810H02, R04-R-8M is used.
For BKO-C1730H02, TRC116-21A10-7M is used.

● Magnet

Part No.	Tolerable speed [r/min]	Outline drawing
H03	0 ~ 6000	Weight: 40 ± 1.5g
H06	0 ~ 12000	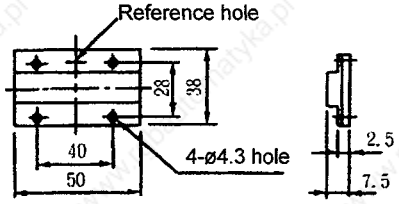 Installation screw: M4 screw
H09	0 ~ 12000	Weight: 14.8 ± 0.7g 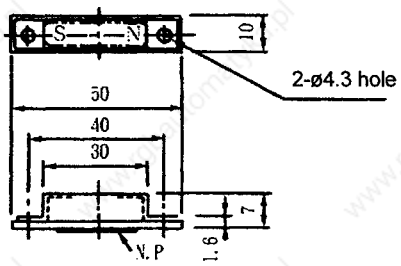 Installation screw: M4 screw
H41	0 ~ 25000	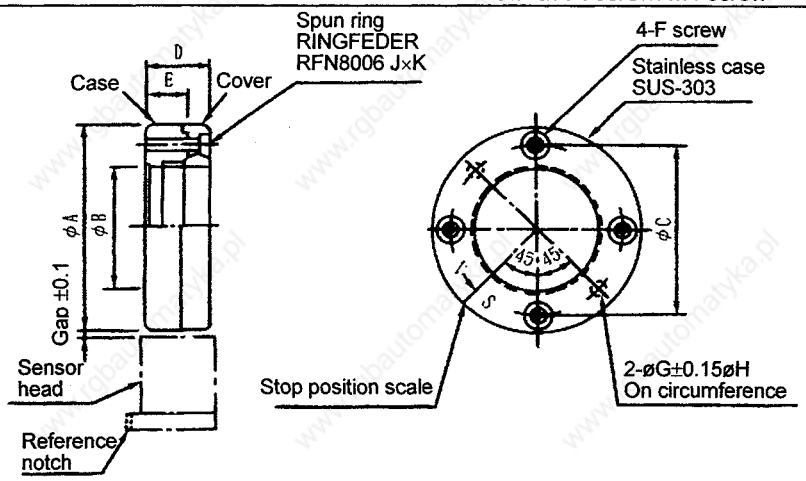
H42	0 ~ 25000	
H43	0 ~ 30000	
H44	0 ~ 30000	

* Polarity (N,S) is indicated on the side wall of cover.
Sensor head should be installed so that the reference notch of sensor head comes on the case side. Refer to P.79 and after for the details.

Magnet Unit: mm

Type	Dimensions										Weight (g)
	A	B	C	D	E	F	G	H	J × X	L	
BKO-C1730H11	105	70H7+0.030 −0	90	28	19	M6×1.0	5	90	70×79	1	1024±4
BKO-C1730H12	94	60H7+0.030 −0	79	25	17	M5×0.8	5	79	60×68	1	768±4
BKO-C1730H13	78	50H7+0.025 −0	66	23	15	M5×0.8	5	66	50×57	1	478±4
BKO-C1730H14	66	40H7+0.025 −0	54	20	13	M4×0.7	5	54	40×45	1	322±4

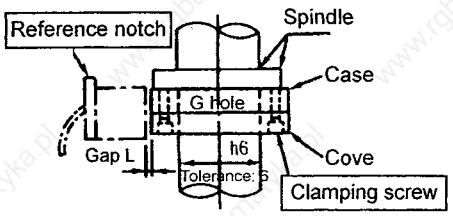

Installation of magnet

Caution on installation of H41~44

1. Tolerance to shaft dimension should be "h6".
2. 2-øG holes can be used for positioning of spindle and magnet.
3. Magnet shall be installed as shown to the left.
4. Misalignment between sensor head and magnet center line shall be within ±2mm.
5. Reference notch of sensor head shall come on the case side.

5.1.2 4096-point orientation using encoder

(1) Connection

Refer to "1.4 Configuration" for the connection of the encoder and spindle drive unit.

(2) Installation conditions

Mechanical characteristics for rotation

a. Inertia	: 0.1×10^{-4}kg·m^2 or less
b. Shaft friction torque	: 0.98N·m or less
c. Shaft angle acceleration	: 10^4rad/sec^2 or less
d. Tolerable speed	: 7,030r/min (rpm)

Mechanical configuration

a. Bearings	: Non-lubricated for 100,000 or more rotations (at 2,000r/min) Non-lubricated for 20,000 hours or more at 6,000r/min
b. Shaft amplitude	: 0.02mm or less at 15mm from end
c. Tolerable load	: Thrust direction 10kg (5kg during operation) Radial direction 20kg (10kg during operation)
d. Weight	: 1.5kg max
e. Squareness of flange to shaft	: 0.05mm or less
f. Flange matching eccentricity	: 0.05mm or less

Working conditions

a. Working temperature range	: –5°C to +55°C
b. Storage temperature range	: –20°C to +85°C
c. Humidity range	: 95% PH (at 40°C) for 8 hours
d. Vibration resistance	: 5 to 50Hz, total vibration width 1.5mm, each shaft for 30 min.
e. Impact resistance	: 294.20m/s^2 (30G) 11msec, each shaft 6 times

(3) Handling

a. Use of a flexible coupling is recommended for the coupling of the encoder and spindle shaft in terms of improving the encoder life and performance.

b. Installation precision
The precision shown below should be secured for the encoder installation section engaging section and installation surface sway in order to maximize the coupling life.

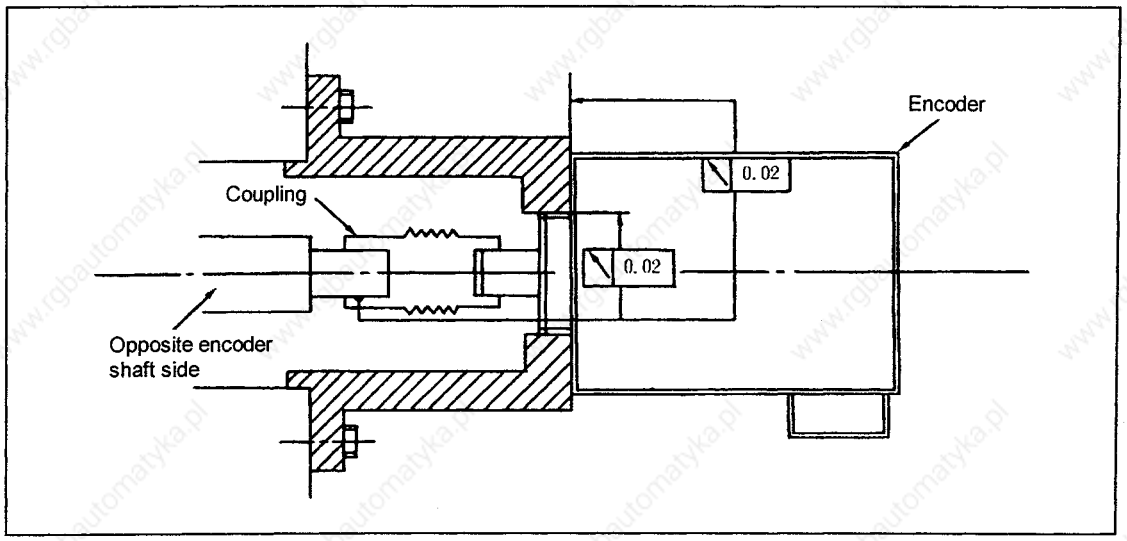

c. Recommended coupling

		Recommendation 1	Recommendation 2
Manufacturer		Tokushu Seiko	Eagle
Model		Model M1	FCS38A
Resonance frequency		1,374Hz	3,515Hz
Position detection error		0.8×10^{-3} °	1.2×10^{-3} °
Tolerable speed		20,000r/min (rpm)	10,000 r/min (rpm)
Mis-alignment	Core deviation	0.7mm	0.16mm
	Angle displacement	1.5°	1.5°
Outline dimensions	Max. length	74.5mm	33mm
	Max. diameter	ø57mm	ø38mm

Refer to the coupling catalogue for details on the coupling.

(4) Encoder orientation parts (Optionally supplied parts)

Encoder (1024p/rev)

Encoder model	Tolerable speed
RFH-1024-22-1M-68	6000r/min
RFH-1024-22-1M-68-8	8000r/min

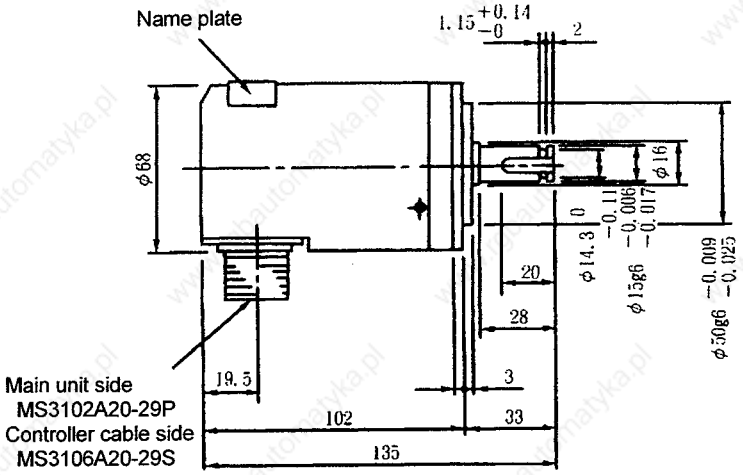

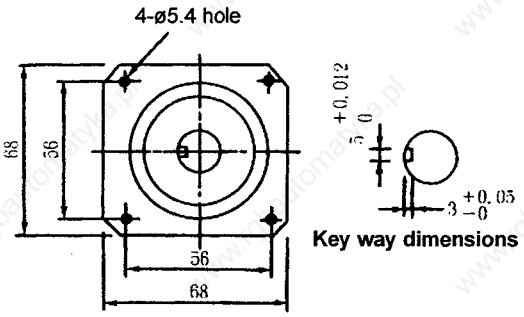

A	1chA	K	OV
B	2chZ	L	
C	1chB	M	
D		N	1ch$\overline{A}$
E	Case earth	P	2ch$\overline{Z}$
F		R	1ch$\overline{B}$
G		S	
H	+5V	T	
J			

5.1.3 4096-point orientation using motor built-in encoder

The motor built-in encoder built-in motor with Z-phase signal is required for this specification.
This can be used only when the motor and spindle coupling is the direction coupling or when the timing belt with a reduction ratio of 1 is used.

(1) Connection

Refer to "1.4 configuration" for the connection of the signal wires.

(2) Installation

The encoder is built into the motor so no special detector needs to be installed.

5.1.4 Operation of orientation

(1) Operation modes

There are three modes of orientation stop. Desired mode can be selected by setting parameter SPECO.

1. PRE :
   ..... (a) Spindle approaches the stop position in the direction of on-going rotation.
2. Forward orientation :
   ..... (b) Spindle approaches the stop position in forward direction of rotation, regardless of direction of on-going rotation.
3. Reverse orientation :
   ..... (c) Spindle approaches the stop position in the reverse direction of rotation, regardless of direction of on-going rotation.

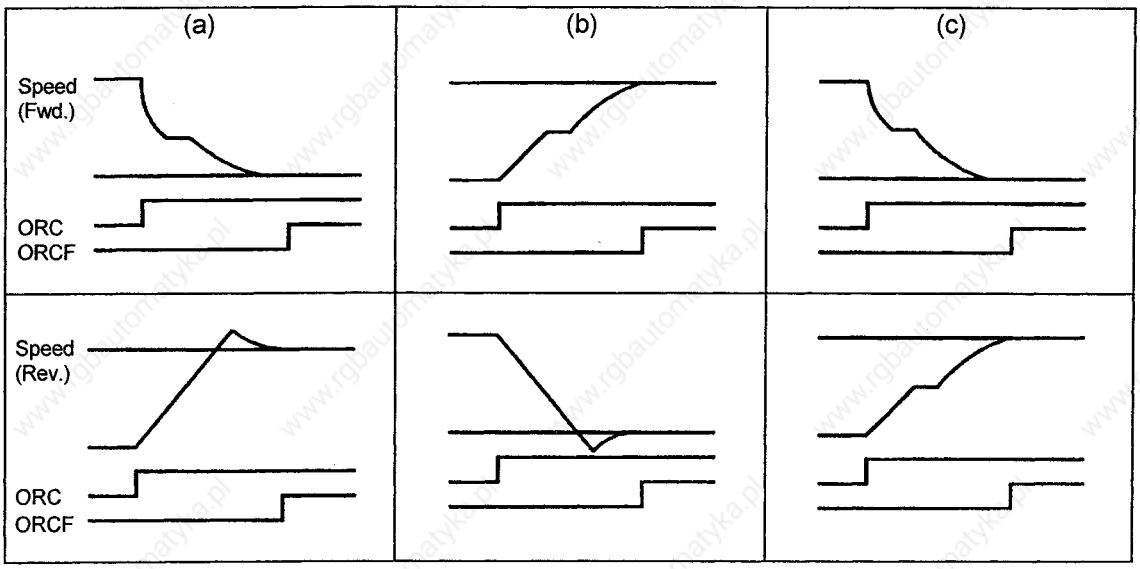

(2) Operation sequence

1) When orientation command ORC is given, motor speed changes from the steady run speed to "Position loop changeover speed" and at the same time the multi-point orientation stop position is read.
2) When motor speed reaches the "Position loop changeover speed", control mode changes from speed control to positioning control (position loop gain parameter (Note 1)).
   ("Position loop changeover speed" is automatically set when position loop gain is specified by parameter.)

3) When control mode changes, distance to the orientation stop position is calculated and the motor is decelerated in the set pattern (specified by parameter CSP) to enter the orientation mode.
4) When the spindle enters the in-position range (set by parameter OINP), "oriented spindle stop complete signal (in-position)" ORCF turns on.
5) The stop position zero point can be shifted by setting parameter OPST.
6) When orientation command (ORC) is removed, the motor is accelerated to the previously specified steadv run speed.

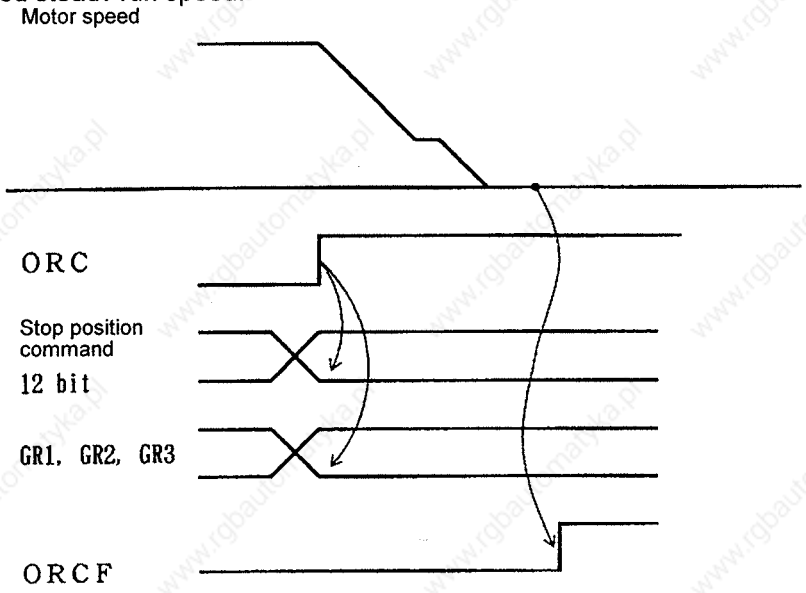

(Note) PGM is used for the magnesensor and motor built-in encoder orientation and PGE is used for the encoder orientation.

The stopping position according to the encoder installation direction is as shown below:

	Case 1	Case 2
Installation direction	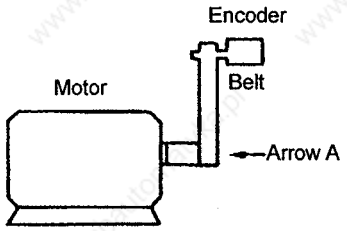	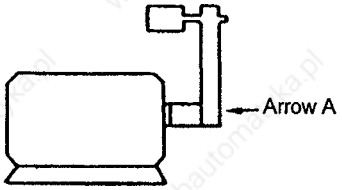
Normal orientation	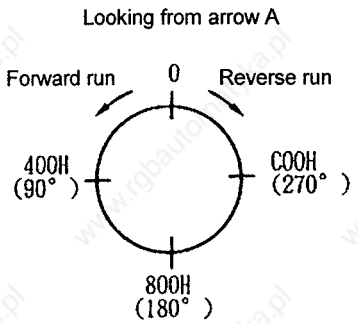	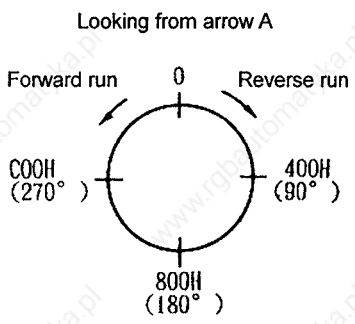

(3) Diagram of relation of parameters for orientation

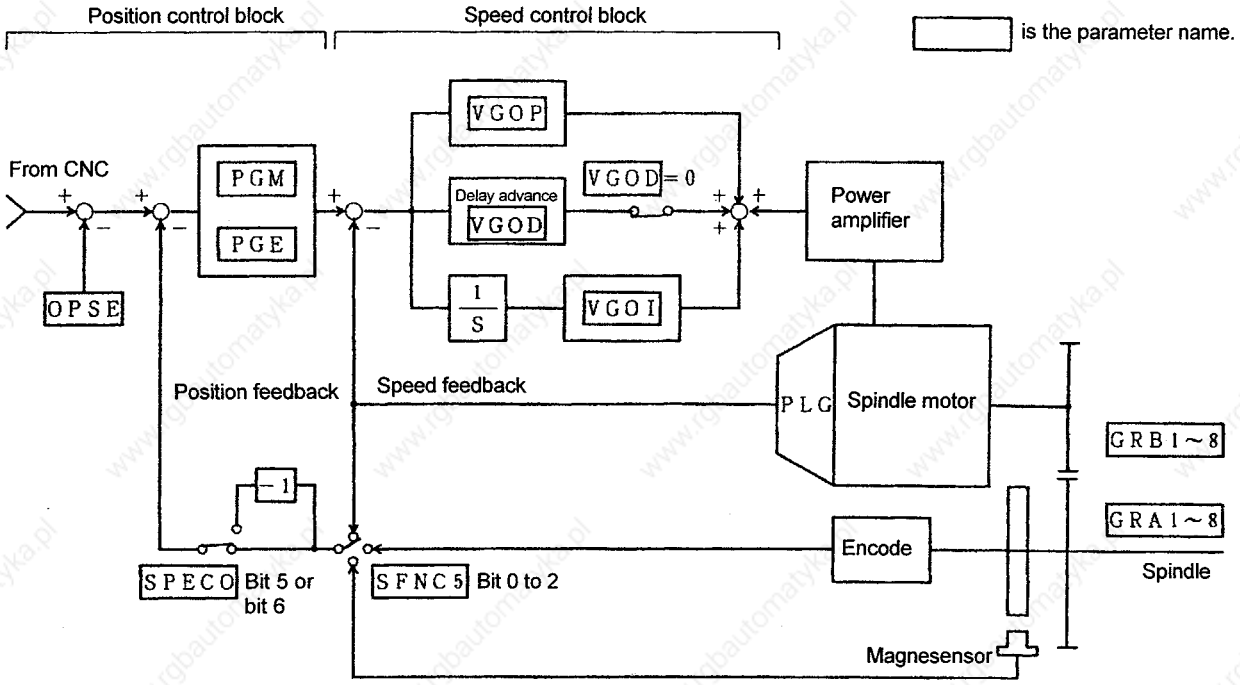

5.2 Synchronous tap function (option)

There are two types of synchronous tap

1. Closed type synchronous tap
2. Semi-closed type synchronous tap

5.2.1 Closed type synchronous tap

A position loop can be built up with position signal from an encoder installed on spindle.

(1) Connection

Refer to "1.4 Configuration" for the connection of the encoder and spindle drive unit.

(2) Installation of encoder

For installation of encoder, refer to the pages related to encoder orientation.

5.2.2 Semi-closed type synchronous tap

A position loop can be built up with position signal from motor built-in encoder.
A special detector is not required for synchronous tap if the spindle is coupled to the motor shaft directly or through gears.
(When belt or timing belt is used, closed type synchronous tap is applicable.)
It is also applicable to standard motor having no Z-phase control.

(1) Connection

No additional connection is required for semi-closed type synchronous tap.

5.2.3 Operation of synchronous tap

One of synchronous tap operation modes can be selected by parameter.

1) Synchronous tap starts after zero point return (parameter SPECT-bitE is set to "0").
2) Synchronous tap starts after deceleration and stop (parameter SPECT-bitE is set to "1").

The operation of synchronous tap is conditioned as shown below.

○ : Available × : Not available

	Without orientation	Magnesensor orientation	Encoder orientation	Motor built-in encoder orientation
Synchronous tap after zero point return	×	○	○	○
Synchronous tap after deceleration and stop	○	○	○	○

5.3 C-axis control (optional)

5.3.1 When using encoder (OSE90K + 1024 BKO-NC6336H01)

(1) Connection

Refer to page "1.4 Configuration" for the connection of the encoder and spindle drive unit.

(2) Installation conditions

Mechanical characteristics for rotation

a. Inertia	: 0.1×10^{-4}kg·m^2 or less
b. Shaft friction torque	: 0.98N·m or less
c. Shaft angle acceleration	: 10^5rad/sec^2 or less
d. Tolerable speed	: 7,030r/min (rpm)

Mechanical configuration

a. Bearings	: Non-lubricated for 100,000 or more rotations (at 2,000r/min) Non-lubricated for 20,000 hours or more at 6,000r/min
b. Shaft amplitude	: 0.02mm or less at 15mm from end
c. Tolerable load	: Thrust direction 10kg (5kg during operation) Radial direction 20kg (10kg during operation)
d. Weight	: 2kg max
e. Squareness of flange to shaft	: 0.05mm or less
f. Flange matching eccentricity	: 0.05mm or less

Working conditions

a. Working temperature range	: –5°C to +55°C
b. Storage temperature range	: –20°C to +85°C
c. Humidity range	: 95% PH (at 45°C) for 8 hours
d. Vibration resistance	: 5 to 50Hz, total vibration width 1.5mm, each shaft for 30 min.
e. Impact resistance	: 294, 20m/s^2 (30G) 11msec, each shaft 10 times

(3) Handling

a. Installation of encoder
Use of a flexible coupling is recommended for the coupling of the encoder and spindle shaft in terms of improving the encoder life and performance.

b. Installation precision
The precision shown below should be secured for the encoder installation section engaging section and installation surface sway to secure the coupling life.

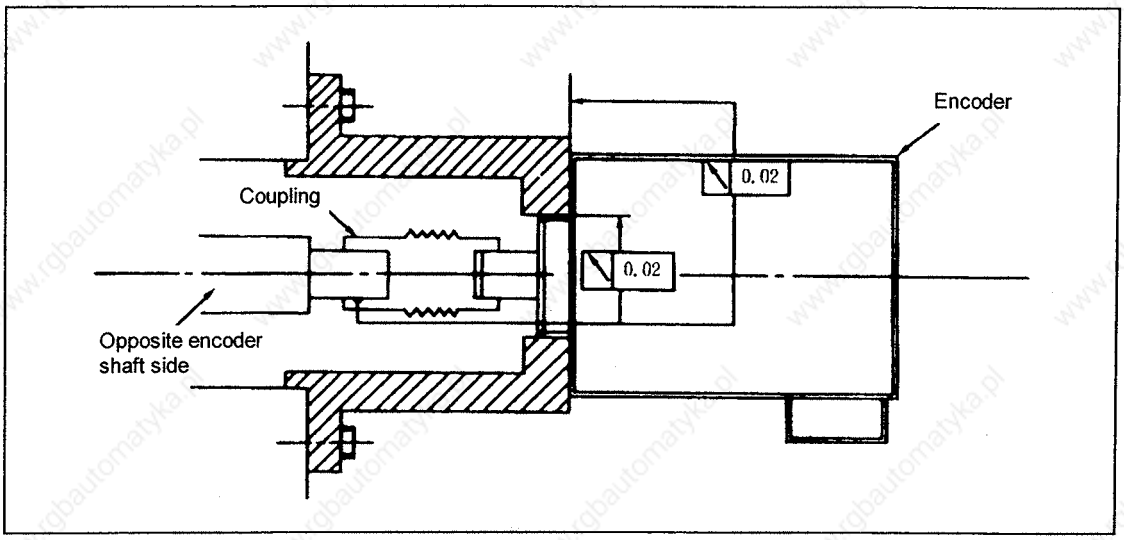

c. Recommended coupling

		Recommendation 1	Recommendation 2
Manufacturer		Tokushu Seiko	Eagle
Model		Model M1	FCS38A
Resonance frequency		1,374 Hz	3,515 Hz
Position detection error		0.8×10^{-3} °	1.2×10^{-3} °
Tolerable speed		20,000 r/min (rpm)	10,000 r/min (rpm)
Mis-alignment	Core deviation	0.7 mm	0.16 mm
	Angle displacement	1.5°	1.5°
Dimensions	Max. length	74.5 mm	33 mm
	Max. diameter	ø57 mm	ø38 mm

Refer to the coupling catalogue for details on the coupling.

d. Cable

1) Consider the following points to allow the encoder to be used to its fullest.

A 4.5V or higher power supply must be secured for the encoder.

For example:

① Increase the +5V, 0V wire size.
② Use two or more wires for +5V, 0V.
③ Keep the cable length as short as possible.

2) Others

The encoder is a precision device so do not apply strong impact, etc., to it.
Incorrect wiring will cause trouble. Always confirm the connector name and pin No., etc., before wiring.

(4) C-axis control parts (Optionally supplied parts)

● Encoder OSE90K + 1024 BKO-NC6336H01

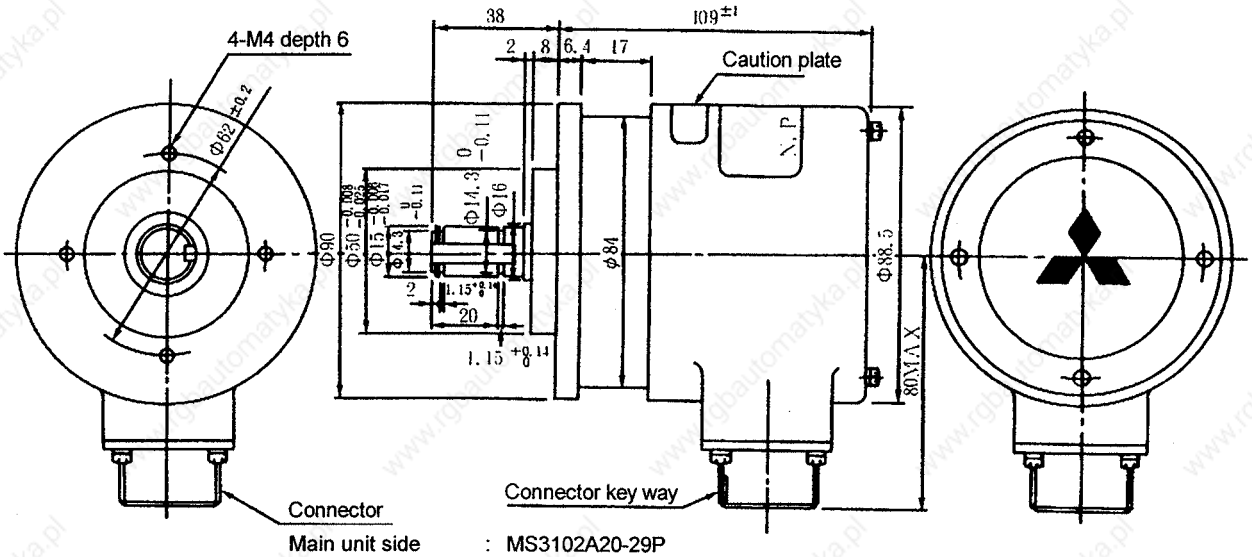

Main unit side : MS3102A20-29P
Controller cable side : MS3102A20-29S (The connector on the controller cable side must be prepared by the user.)

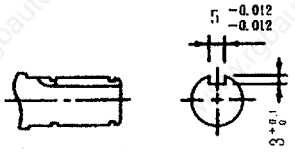

Note 1. The max. encoder speed must be 6,000r/min or less.
Note 2. The dimensional tolerance that is not specified is ±0.5mm.

Signal

	Generated signals	Remarks
1ch	1024 C/T	A • B-phase, $\overline{A}$ • $\overline{B}$ -phase
2ch	1 C/T	Z-phase • $\overline{Z}$ -phase
3ch	90000 C/T	C • D-phase, $\overline{C}$ • $\overline{D}$ -phase
4ch	1 C/T	Y-phase • $\overline{Y}$ • B-phase

Connector pin layout

Pin	Function
A	1ch A-phase
B	2ch Z-phase
C	1ch B-phase
D	——
E	Case grounding
F	3ch C-phase
G	3ch D-phase
H	DC +5V$^{+5\%}_{-10\%}$
J	OV

Pin	Function
K	OV
L	3ch $\overline{C}$-phase
M	3ch $\overline{D}$-phase
N	1ch $\overline{A}$-phase
P	2ch $\overline{Z}$-phase
R	1ch $\overline{B}$-phase
S	4ch Y-phase
T	4ch $\overline{B}$-phase

● Grounding plate and cable clamp fittings
Refer to section 5.4 "Single parts".

5.3.2 When using built-in encoder (MBE90K)

Refer to the MBE90K (built-in C-axis encoder) Specifications and Instruction Manual [BNP-A2993-41].

5.3.3 When using built-in encoder (MHE90K)

Refer to the MHE90K (built-in C-axis encoder) Specifications and Instruction Manual [BNP-A2993-44].

5.4 Single parts (optionally supplied parts)

5.4.1 Power step-down transformer

When available power supply is at 400V, use this optional step-down transformer.

(1) 12-23kVA (ITEM1 ~ 3)

Item	Capacity (kVA)	Dimensions A		Weight (kg)	Remarks
1	12	230		90	7.5K
2	17	175		115	11K
3	23	215		130	15K

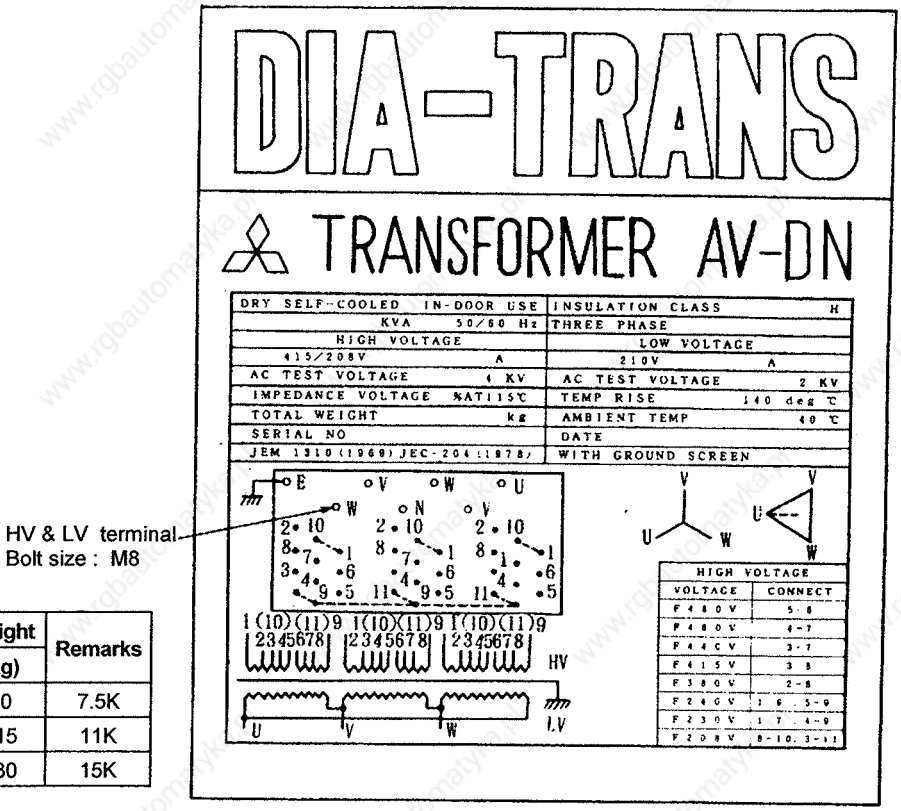

HV & LV terminal
Bolt size : M8

Nameplate

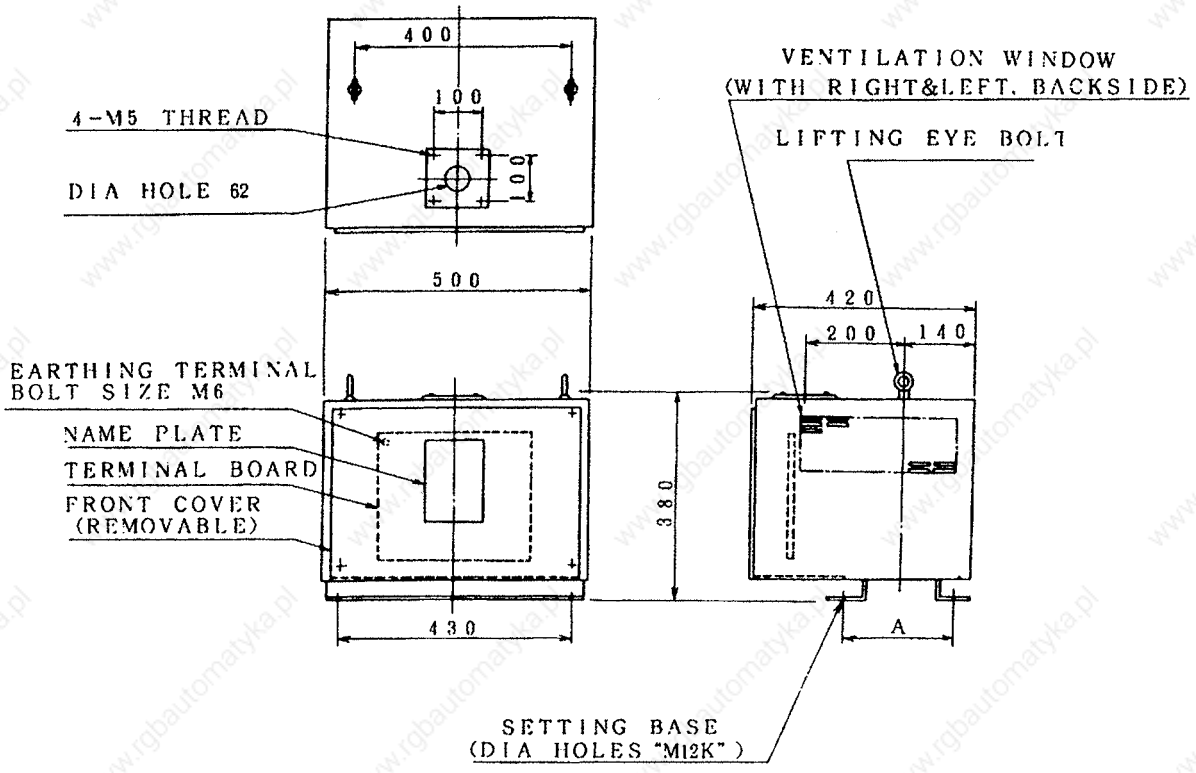

(2) 30kVA ~ 75kVA (ITEM4 ~ 8)

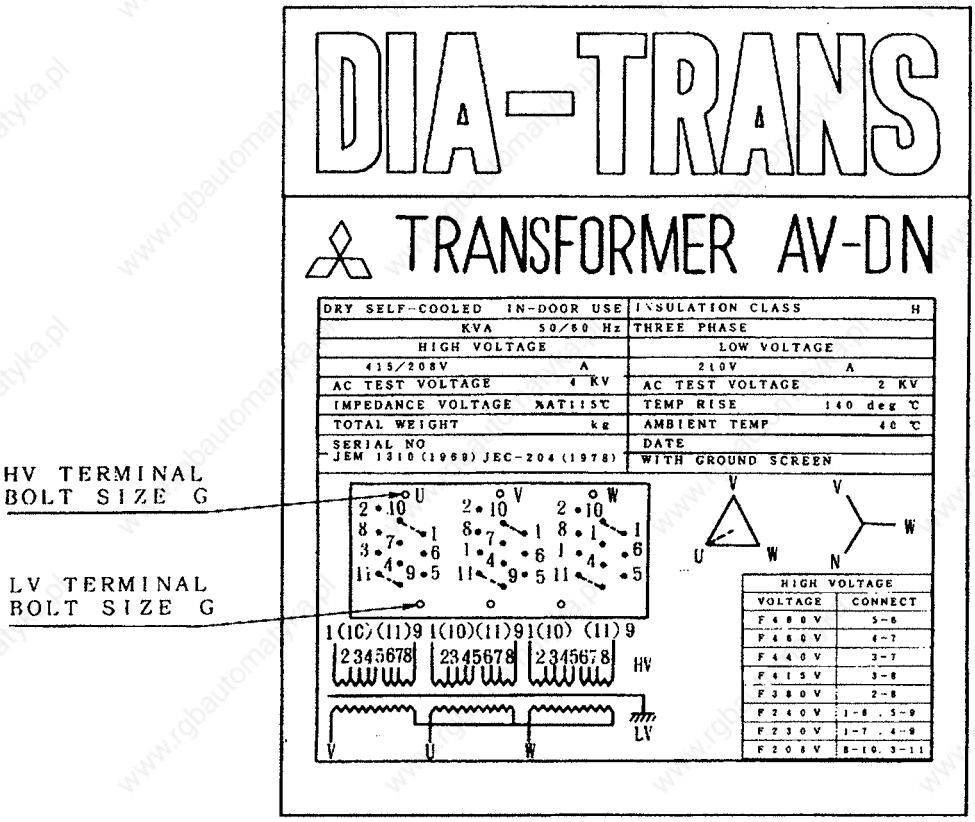

Item	Capacity (kVA)	Dimensions							Weight (kg)	Remarks
		A	B	C	D	E	F	G		
4	30	535	395	625	460	250	445	M12	165	18.5K
5	37	535	395	665	460	250	485	M12	185	22K, 26K
6	44	535	425	665	460	265	485	M12	205	30K
7	60	625	425	815	540	255	625	M16	280	37K
8	75	625	425	840	540	270	650	M16	320	45K

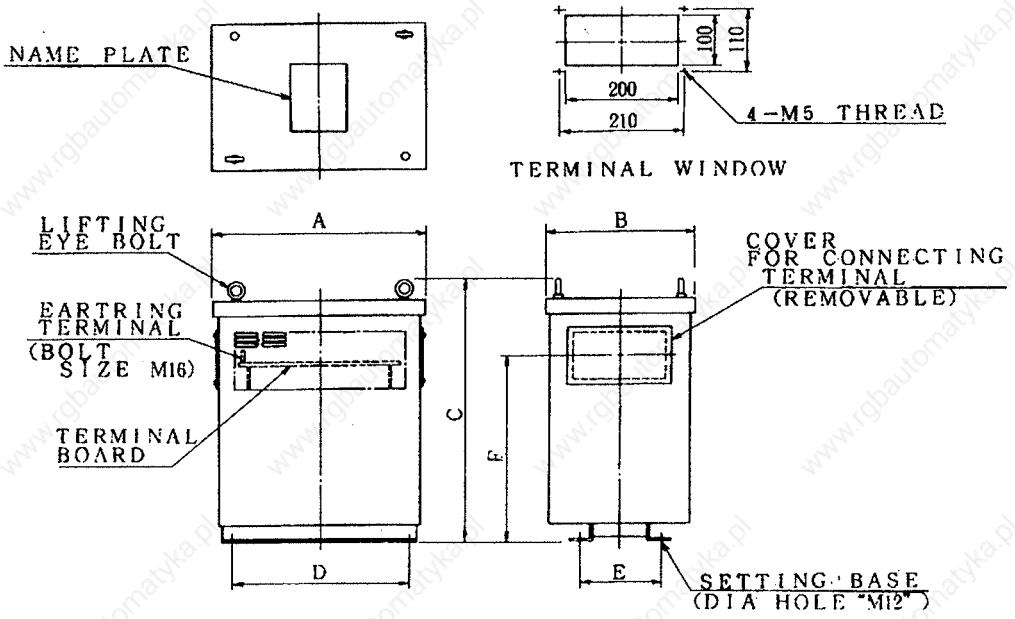

5.4.2 Noise filter

(1) Selection

If radio noise must be reduced, select a noise filter from the following table according to the power supply unit model:

MDS-A-CV- MDS-B-CV-	Noise filter name (Tohoku Kinzoku)
37	LF-330
55	LF-340
75	LF-350
110	LF-360
150, 185	LF-380K
220, 260, 300	Two LF-380K units in parallel

(2) Noise filter installation position

Insert the noise filter in the unit input.

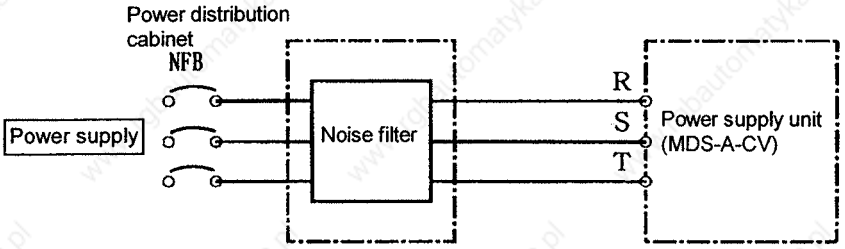

* Connect to the transformer input in power supply units that use the transformer.

(3) Specifications

Name	Rated voltage AC/DC (V)	Rated current AC/DC (A)	Tested voltage AC 1 min. (V) Between case terminals	Insulation resistance (MΩ) 500VDC	Leakage current (mA) 250V 60Hz	Working temperature range (°C)
330	200V	30A	1500	> 300	< 1	–20 ~ +55
340	200V	40A	1500	> 300	< 1	–20 ~ +45
350	200V	50A	1500	> 300	< 1	–20 ~ +45
360	200V	60A	1500	> 300	< 1	–20 ~ +45
380K	200V	80A	2000	> 300	< 5	–25 ~ +55

(4) Shape and dimensions

LF-300 series

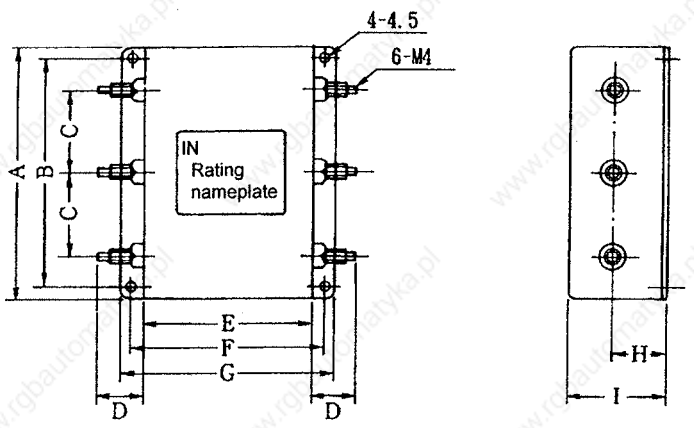

Unit: mm

Part name	A	B	C	D	E	F	G	H	I
LF-330	180	170	60	29	120	135	150	35	65
LF-340	180	160	50	30	200	220	240	40	80
LF-350	180	160	50	30	200	220	240	40	80
LF-360	200	180	60	30	300	320	340	50	100

LF-K series

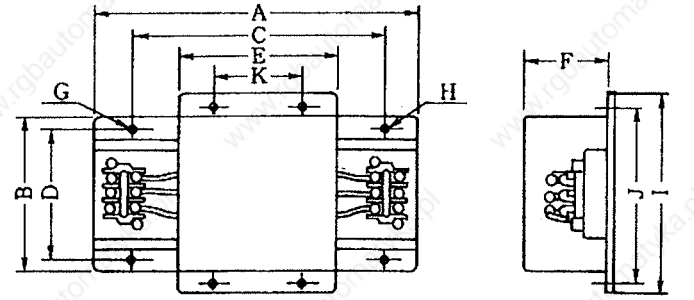

Unit: mm

Name	Terminal plate	A	B	C	D	E	F	G	H
LF-380K	TE-K22 M6	670	400	560	380	500	170	9×6.5ø	6.5ø

5.5 Other optional specifications

Refer to the following optional specifications for each model shown below for optional specifications not explained in this manual.

	Title of optional specifications	Specifications No.
①	MDS-A Series coil changeover function optional specifications	BNP-A2993-23
②	MBE90K (built-in C-axis encoder) specifications and instruction manual	BNP-A2993-41
③	MBE90K (built-in C-axis encoder) specifications and instruction manual	BNP-A2993-44

5.6 Theoretical acceleration and deceleration times

In the calculation described below, load torque is assumed to be zero. Therefore, acceleration and deceleration times determined here somewhat differ from actual acceleration and deceleration times.

(1) Definition

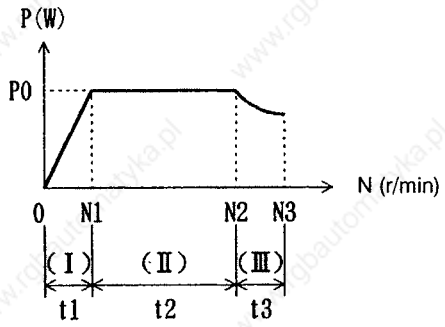

(Note) 1) "Po" is (Rated power × 1.2).
Example : For spindle of 2.2/3.7kW,
$Po = 3700 \times 1.2 = 4440$ (W)
2) GD^2 = (Motor GD^2) + (Motor shaft conversion load GD^2) ($kg \cdot m^2$)

(2) Acceleration/deceleration time "t"

1) Constant torque zone

$$t1 = \frac{1.03 \times GD^2 \times N1^2}{375 \times Po} \text{ (sec)}$$

2) Constant output (power) zone

$$t2 = \frac{1.03 \times GD^2 \times (N2^2 - N1^2)}{2 \times 375 \times Po} \text{ (sec)}$$

3) Reduced output zone

$$t3 = \frac{1.03 \times GD^2 \times (N3^3 - N2^3)}{3 \times 375 \times Po \times N2}$$

Therefore, accel./decel. time t ($0 \rightarrow N_3$) is,
$t = t_1 + t_2 + t_3$ (sec)

Example: { $GD_L^2 = 0.123 kg \cdot m^2$
For motor SJ-N3.7A

From specification 2, $GD_M^2 = 0.021 kg \cdot m^2$
thus, $GD^2 = 0.021 + 0.123 = 0.144 kg \cdot m^2$

$$t_1 = \frac{1.03 \times 0.144 \times 1500^2}{375 \times 3700 \times 1.2} = 0.200 \text{ (sec)}$$

$$t_2 = \frac{1.03 \times 0.144 \times (6000^2 - 1500^2)}{2 \times 375 \times 3700 \times 1.2} = 1.503 \text{ (sec)}$$

$$t_3 = \frac{1.03 \times 0.144 \times (8000^3 - 6000^3)}{3 \times 375 \times 3700 \times 1.2 \times 6000} = 1.465$$

Accel./decl. Time for $0 \rightarrow$ 8000r/min
$t = 0.200 + 1.503 + 1.465 = 3.168$ (sec)

Unit conversion :

Speed : $1 r/min = \frac{2\pi}{60}$ rad/s
Output (power) : 1kW = 1/1.3596HP

Formula :

$$P = \omega To = (2\pi \frac{N}{60}) \times T$$

P : Output [W]
ω : Angular velocity [rad/s]
To : Torque [N·m]
N : Speed [r/min]
T : Torque [N·m]

6. Large Capacity Spindle Drive

6.1 Outline dimensions

In-panel installation type

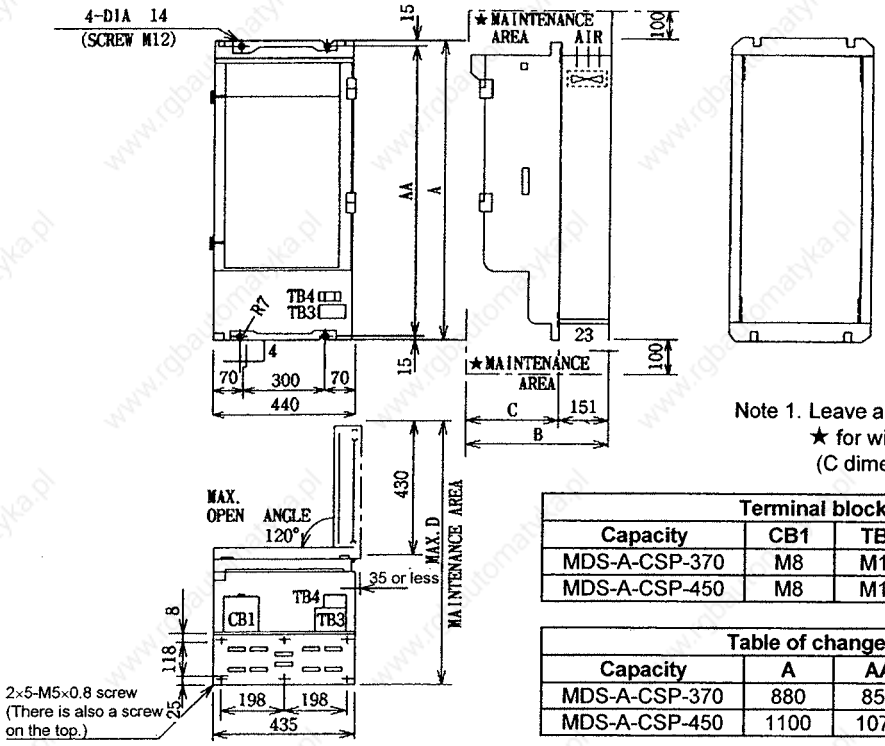

Note 1. Leave a space at the areas marked with a ★ for wiring and heat dissipation.
(C dimension direction, +30mm or more)

Terminal block screw sizes					
Capacity	CB1	TB3		TB4	EARTH
MDS-A-CSP-370	M8	M10		M3.5	M8
MDS-A-CSP-450	M8	M10		M3.5	M8

DIM IN mm

Table of changed dimensions					
Capacity	A	AA	B	C	D
MDS-A-CSP-370	880	850	390	239	788
MDS-A-CSP-450	1100	1070	390	239	788

Intermediate panel type

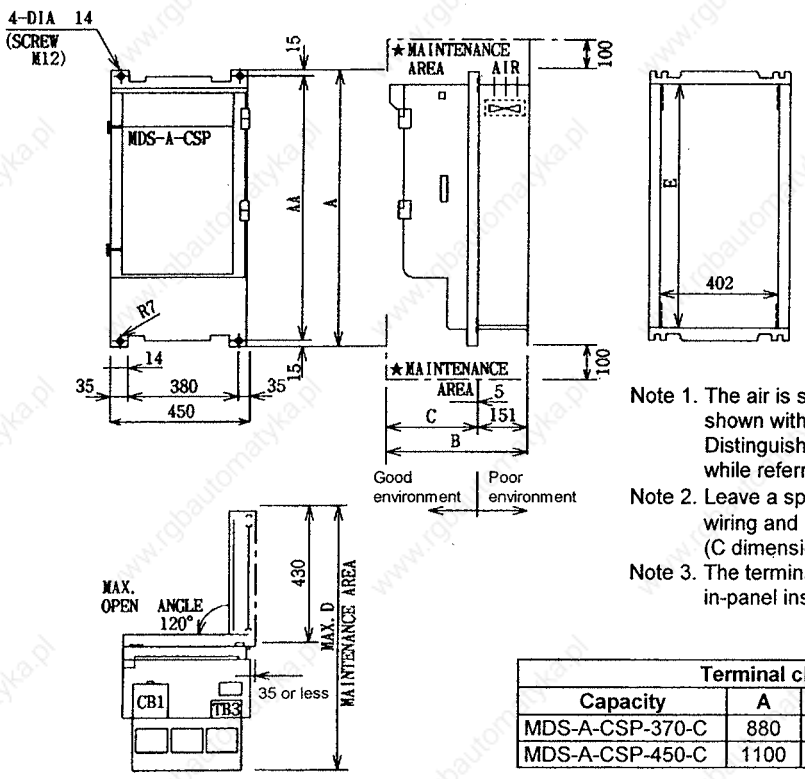

Note 1. The air is shut off by the side (intermediate panel) shown with a dotted line in the drawing.
Distinguish between the good and poor environment while referring to the installation reference drawing.
Note 2. Leave a space at the areas marked with a ★ for wiring and heat dissipation.
(C dimension direction, +30mm or more)
Note 3. The terminal block screw sizes are the same as the in-panel installation type.

Unit : mm

Terminal changed dimensions						
Capacity	A	AA	B	C	D	E
MDS-A-CSP-370-C	880	850	390	239	788	778.6
MDS-A-CSP-450-C	1100	1070	390	239	788	993.6

Precautions for installing intermediate panel type controller

(1) Installation procedures

1. Machine installation holes into the power distribution cabinet side as shown below.
2. Install with bolts at the four positions Ⓑ with packing between the intermediate panel section and power distribution cabinet.

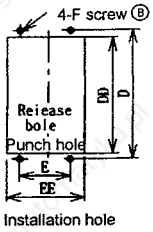

Unit : mm

Table of changed dimensions					
Capacity	D	DD	E	EE	F
MDS-A-CSP-370-C	850	800	380	424	M12
MDS-A-CSP-450-C	1070	1020	380	424	M12

(2) Installation example

Example 1.
Secure an air ventilation area when the machine surface is behind the power distribution cabinet.

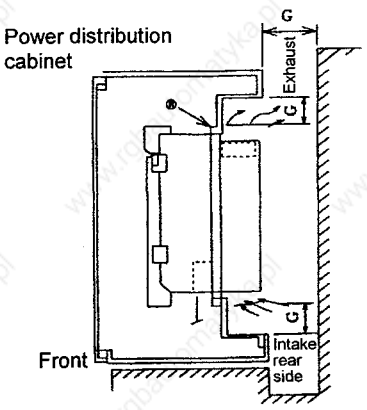

Example 2.
If the outside air cooling section is to be set outside the power distribution cabinet, make sure that cutting chips, etc., do not enter the exhaust section.

Note. Place a filter at the partition suction section shown with a dotted line when installing the unit in a poor environment (factory with large quantities of oil mist), so as to improve the cooling section air.

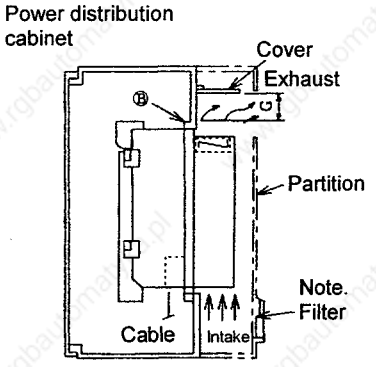

Unit : mm

Table of changed dimensions		
Capacity	G	Intake/Exhaust area
MDS-A-CSP-370-C	150	150 × 420
MDS-A-CSP-450-C	150	150 × 420

6.2 Connection of each unit

CAUTION

Do not apply a voltage other than that specified on each terminal. Failure to observe this could lead to breakage or trouble.

Drive section wiring system diagram

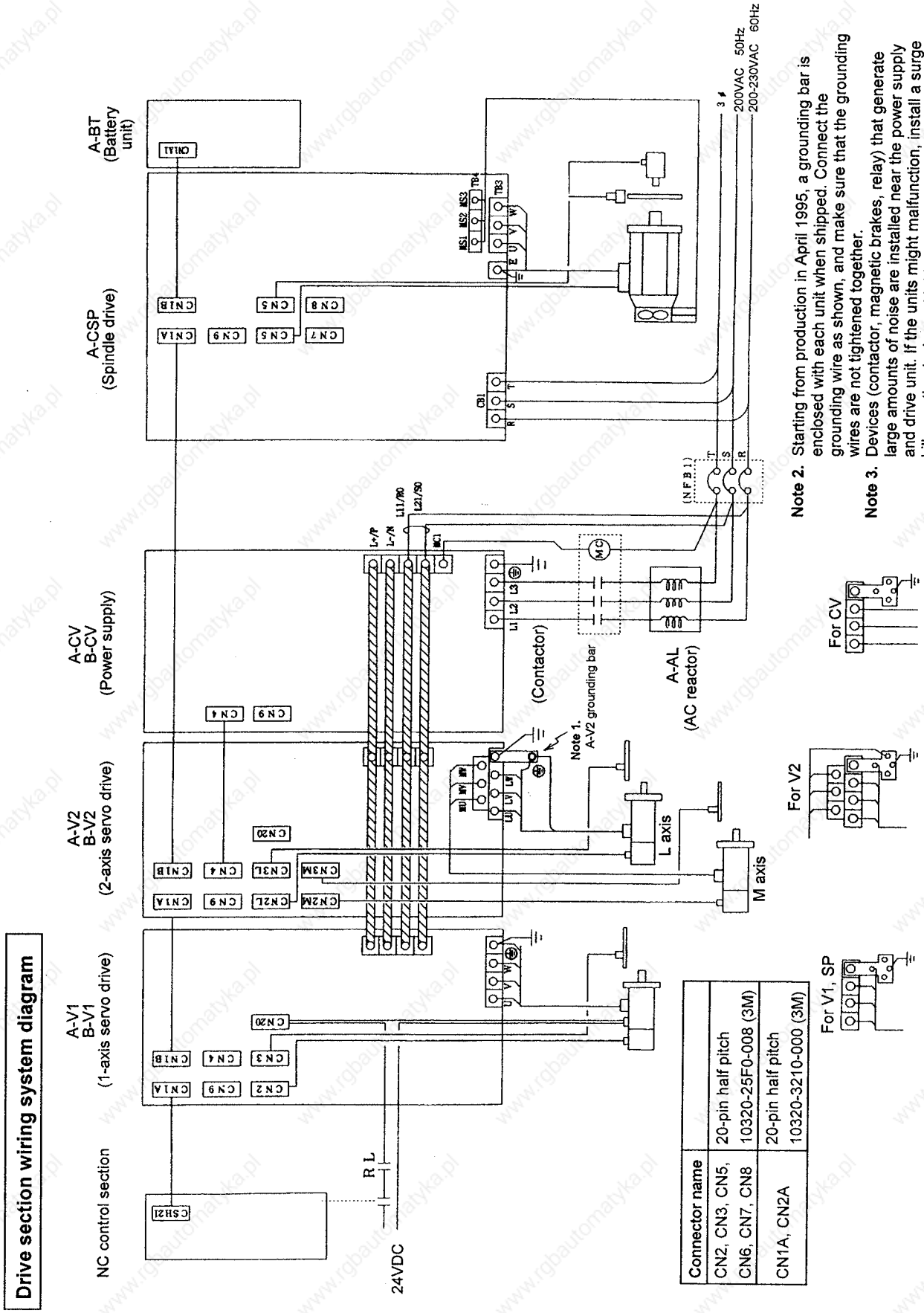

Connector name	
CN2, CN3, CN5, CN6, CN7, CN8	20-pin half pitch 10320-25F0-008 (3M)
CN1A, CN2A	20-pin half pitch 10320-3210-000 (3M)

6.3 Drive section connector and cable specifications

Half-pitch cable connection system

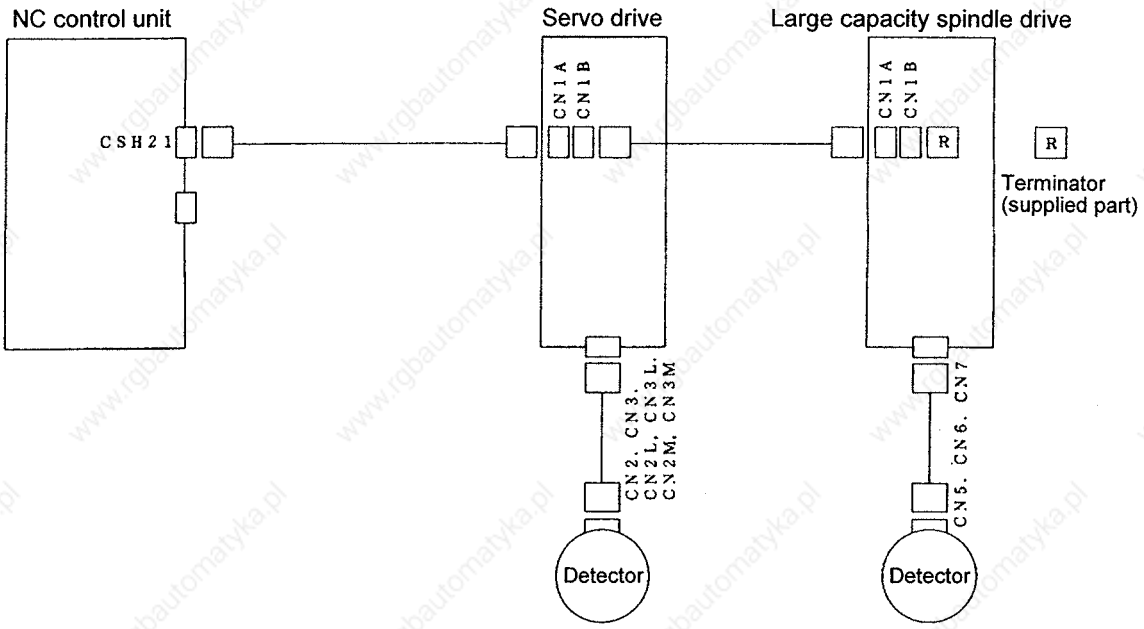

Note. Refer to the Servo/Spindle System Configuration Section, sections 5.1 and 5.2 for the cable list and details on the cable.

Selection of wire size

Select the wires for the power lead-in and spindle motor output according to the large capacity spindle drive unit capacity as shown below instead of by the motor.

Large capacity spindle drive unit	A-CSP-370/370C	A-CSP-450/450C
Power lead-in wire Recommended wire size	HIV50SQ	HIV60SQ
Spindle motor output wire Recommended wire size	HIV50SQ	HIV60SQ

6.4 Electrical specifications

Type	**In-panel installation type**	MDS-A-CSP-370	MDS-A-CSP-450
	Intermediate panel installation type	MDS-A-CSP-370C	MDS-A-CSP-450C
Power supply capacity [kVA]		54	63
Total heating amount [W] (Note)		1500	1700
Power supply		200/200 ~ 230V +10% –15% 50/60Hz ±3Hz	
Weight [kg]	**In-panel installation type**	78.5	101.5
	Intermediate panel installation type	78.5	101.5
Main circuit method		BiMOS Sinusoidal wave PWM inverter	
Control circuit		Speed feedback with pulse generator, digital closed loop control, vector control	
Braking method		Power supply regenerative braking	
Speed fluctuation rate		0.2% or less of maximum speed (at load fluctuation of 10 to 100%)	
Speed command		Serial connection with M500 Series CNC	
Ambient temperature/humidity		0°C to 55°C / 90% or less (with no dew condensation)	
Atmosphere		No toxic gases or dust (environment-resistant JEM1103 grade C compliant)	
Vibration		$4.90/s^2$ (0.5G) or less	
Conformation standards		IEC	
Main circuit wires	**Power lead-in wire**	HIV50SQ	HIV60SQ
	Motor output wire	HIV50SQ	HIV60SQ

Note. This is the total heating amount during continuous rated operation.
For the intermediate panel type unit, the heating amount outside the panel will be approximately (total heating amount –120) × 0.7.

Appendix 1. EN Standards Step-down Insulation Transformer

The following transformer is available as an EN Standards step-down insulation transformer. Contact the manufacturer directly to purchase.

- Manufacturer : Nunome Electric

Insulation transformer

Type : NETxxxxTUV
Approval No. : B94 10 21343 002

■ Standard specifications

- Rating : Continuous
- Capacity : Refer to following table
- Rated frequency : 50/60Hz
- Primary voltage : 380 400 415 440 460 480V
- Secondary voltage : 200V
- Insulation Class : Class H
- Connection : 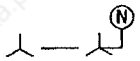
- Max. ambient temperature: 50°C

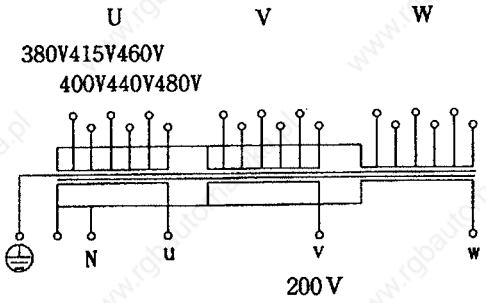

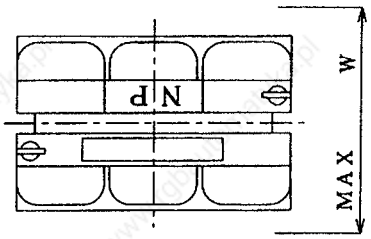

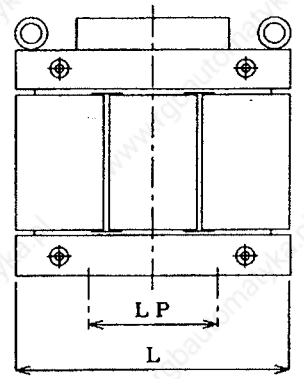

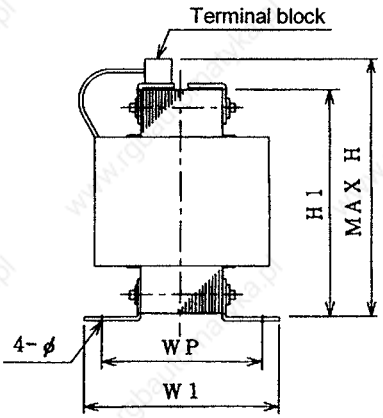

■ Product outline dimensions

Type	Capacity	Secondary current (A)	L	LP	W	WP	W1	H	H1	ø	kg	Terminal connection wire range (mm^2)
NET 3460TUV	3460VA	10	250	120	210	154	174	310	240	10×12	36	0.33 ~ 6
NET 5200TUV	5200VA	15	320	180	240	153	185	355	285	10	50	0.33 ~ 6
NET 6930TUV	6930VA	20	360	250	240	160	190	410	340	13	64	P0.5 ~ 10 S1.5 ~ 16
NET 010.4TUV	10.4kVA	30	360	250	280	200	230	410	340	13	93	1.5 ~ 16
NET 013.9TUV	13.9kVA	40	500	330	300	205	245	455	370	13×15	120	2.5 ~ 16
NET 017.3TUV	17.3kVA	50	500	330	330	225	265	455	370	13×15	143	2.5 ~ 16
NET 026TUV	26kVA	75	530	305	400	222	280	535	450	13	206	P2.5 ~ 16 S6 ~ 50
NET 034.6TUV	34.6kVA	100	550	270	440	305	355	575	490	13	273	P2.5 ~ 16 S6 ~ 50

Appendix 2. EMC Installation Guidelines

1. Introduction

EMC Instructions became mandatory as of January 1, 1996. The subject products must have a CE mark attached indicating that the product complies with the Instructions. As the NC unit is a component designed to control machine tools, it is believed that it is not a direct EMC Instruction subject. Thus, the CE mark will not be attached to our NC units. However, we would like to introduce the following measure plans to backup EMC Instruction compliance of the machine tool as the NC unit is a major component of the machine tools.

(1) Measure plans to suppress radiation obstruction to external sources, assuming that the unit is installed in a control panel.
(2) Instruction of a noise filter (line filter, ferrite core, etc.) for EMC measures.
Mitsubishi is carrying out tests to confirm the compliance to the EMC Standards under the environment described in this manual. However, the level of the noise from the power supply line or from in-air conveyance will differ according to the equipment type and layout, control panel structure and wiring lead-in, etc. Thus, we ask that the final noise level be confirmed by the machine manufacturer.
These contents are the same as the EMC INSTALLATION GUIDELINES (BNP-B8582-45-A).

2. EMC

The EMC Instructions largely regulate the following two withstand levels.

(1) Emission..... Capacity to prevent output of obstructive noise that adversely affects external sources.
(2) Immunity..... Capacity to not malfunction due to obstructive noise from external source.

The details of each level are classified below. It is assumed that the Standards and test details required for a machine tool are the same as these.

Class	Name	Details	Generic Standard	Standards for determining test and measurement
Emission	Radiated noise	Electromagnetic noise radiated through the air	EN50081-2 (Industrial environment)	EN55011
	Conductive noise	Electromagnetic noise discharged from power supply line		
Immunity	Static electricity electrical discharge	Example) Noise from a charged human body	EN50082-2 (Industrial environment)	EN61000-4-2
	Radiated magnetic field	Example) Electromagnetic noise from wireless transmitters or broadcasting companies, etc.		ENV50140
	Burst wave noise	Example) Relay noise or electromagnetic noise caused by live electricity being turned on or off		EN61000-4-4
	Conductive immunity	Example) Electromagnetic noise flowed from power supply wires or earthing wires, etc.		ENV50141
	Power supply frequency field	Example) Electromagnetic noise of 50/60Hz power supply frequency		EN61000-4-8

3. EMC Measures

The main items relating to EMC measures include the following.

(1) Store the device in an electrically sealed metal panel.
(2) Earth all conductors that are floating electrically.
(3) Lengthen the distance between the noise source and partner device. Store the noise source independently in a panel.
(4) Insulate the circuit so that noise is not conducted.
(5) Shield the input/output wires (motor feedback cable, drive cable, etc.)
(6) Install a noise filter.

Note that the electromagnetic noise radiated in the air is greatly affected by the clearance of the panel and the quality of the cable shield.

4. Measures for panel structure

The design of the panel is a very important factor for the EMC measures, so take the following measures into consideration.

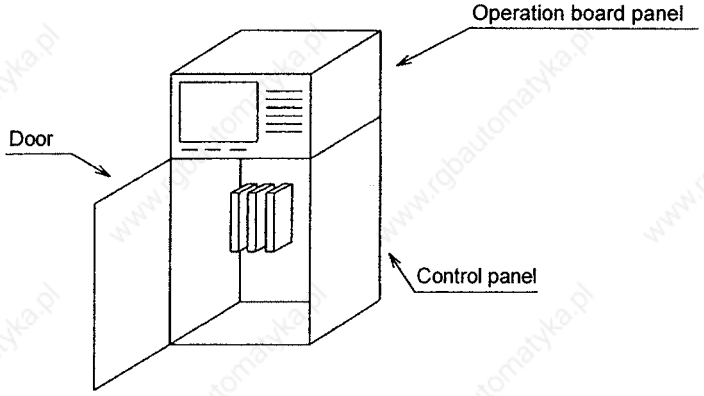

4.1 Measures for control panel unit

(1) Use metal for all materials configuring the panel.
(2) For the joining of the top plate and side plates, etc., mask the contact surface with paint, and fix with welding or screws.
In either case, keeping the joining clearance to a max. of 10cm for a better effect.

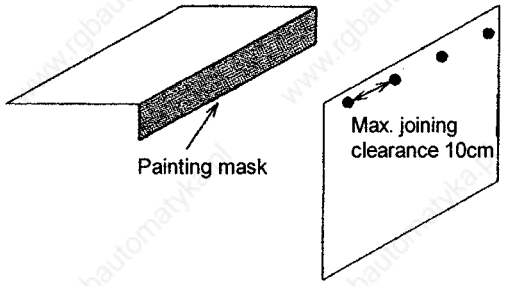

(3) Note that if the plate warps due to the screw fixing, etc., by that creating a clearance, noise could leak from that place.
(4) Plate (nickel, tin) the metal plate surface at the earthing section, such as the earthing plate.
(5) The max. tolerable hole diameter of the openings on the panel surface, such as the ventilation holes, must be 3cm to 5cm. If the opening exceeds this tolerance, use a measure to plug it. Note that even when the clearance is less than 3cm to 5cm, noise may still leak if the clearance is long.

Example)

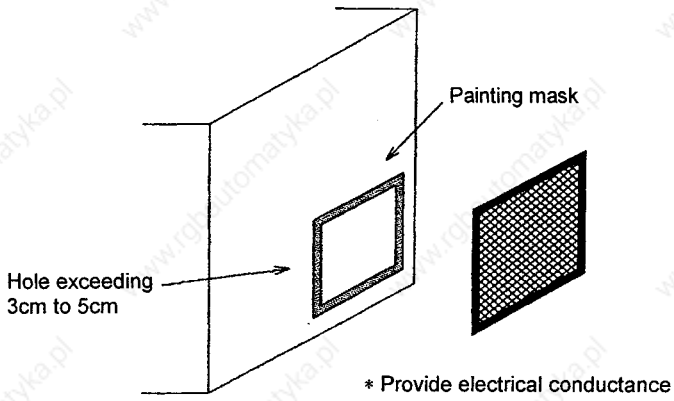

4.2 Measures for door

(1) Use metal for all materials configuring the door.
(2) Use an EMI gasket or conductive packing for the contact between the door and control panel unit.

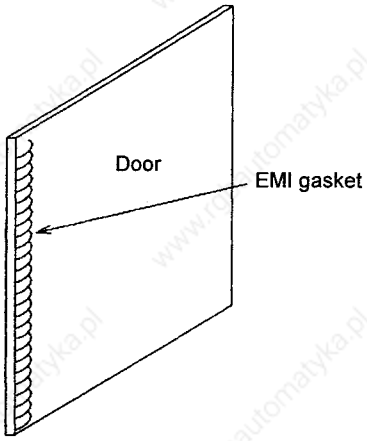

(3) The EMI gasket or conductive packing must contact a uniform and correct position of the metal surface of the control panel unit.
(4) The surface of the control panel unit contacted by the EMI gasket or conductive packing must have conductance treatment.

Example) Weld (or screw) a welded plate that is plated (nickel, tin).

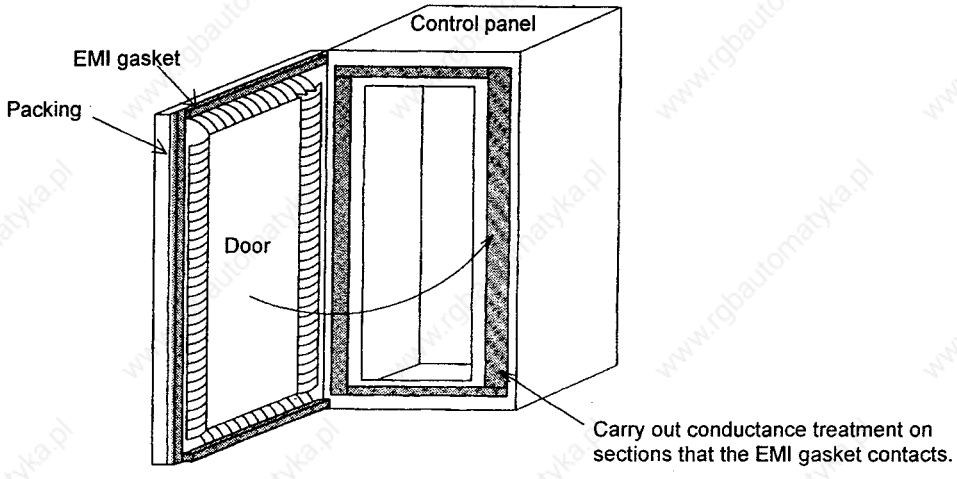

(5) As a method other than the above, the control panel unit and door can be connected with a plain stitch wire. In this case, the panel and door should be contacted at as many points as possible.

4.3 Measures for operation board panel

(1) Always connect the operation board and indicator with an earthing wire.
(2) If the operation board panel has a door, use an EMI gasket or conductive packing between the door and panel to provide electrical conductance in the same manner as the control panel.
(3) Connect the operation board panel and control panel with a sufficiently thick earthing wire.

4.4 Shielding of input power supply section

(1) Separate the input power supply section from other parts of the control panel so that the input power supply cable will not be contaminated by radiated noise.

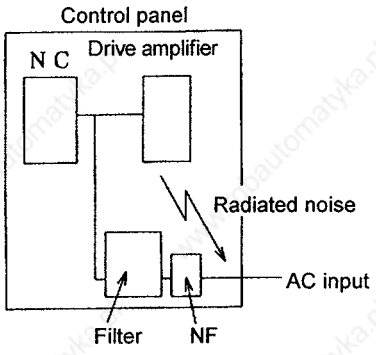

The power supply line noise is eliminated by the filter, but cable contains noise again because of the noise radiated in the control panel.

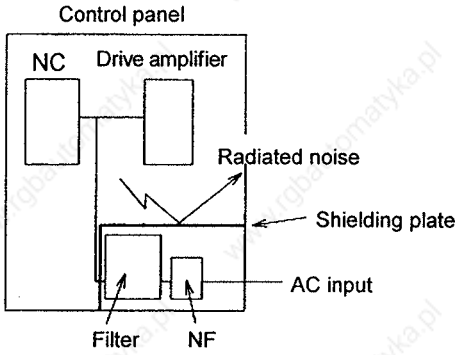

Use a metal plate, etc., for the shielding partition. Make sure not to create a clearance.

5. Measures for various cables

The various cables act as antennas for the noise, and thus appropriate treatment is required to discharge the noise externally. The wiring between the drive amplifier and motor act as an extremely powerful noise source, so apply the following measures.

5.1 Measures for wiring in panel

(1) If the cables are led unnecessary in the panel, they will be contaminated by noise. Thus, keep the wiring length as short as possible.

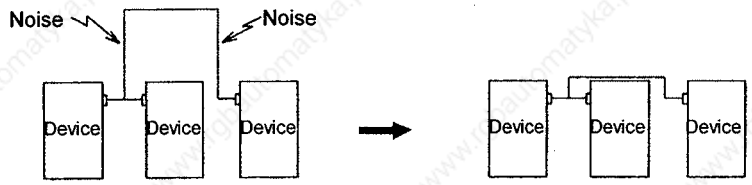

(2) The noise from other devices will enter the cable and be discharged externally, so avoid internal wiring near the openings.

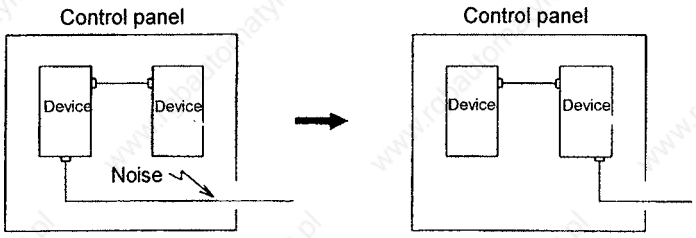

(3) Connect the control device earthing terminal and earthing plate with a thick wire. Take care to the leading of the wire as with the above items.

5.2 Measures for shield treatment

Use the shield clamp enclosed with the Mitsubishi NC unit for the shield treatment. Refer to the "Connection Manual" for details.

NC section

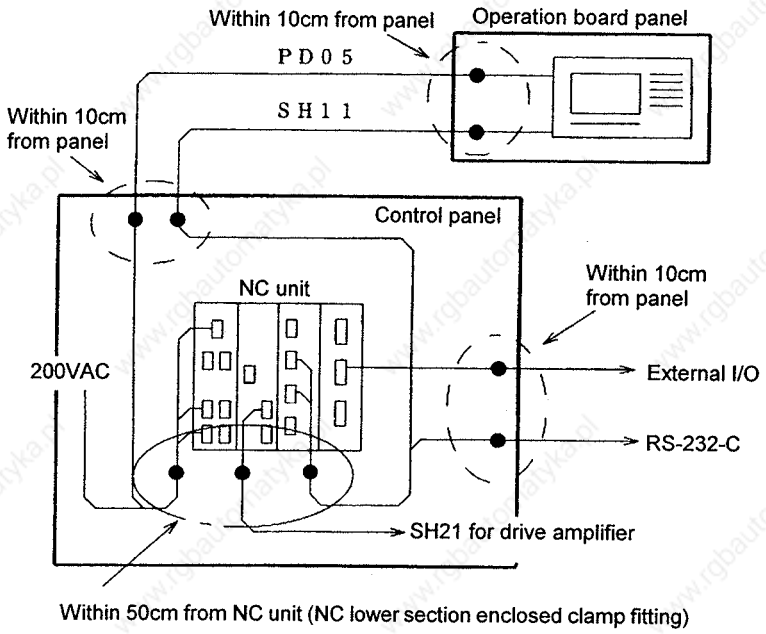

Drive section

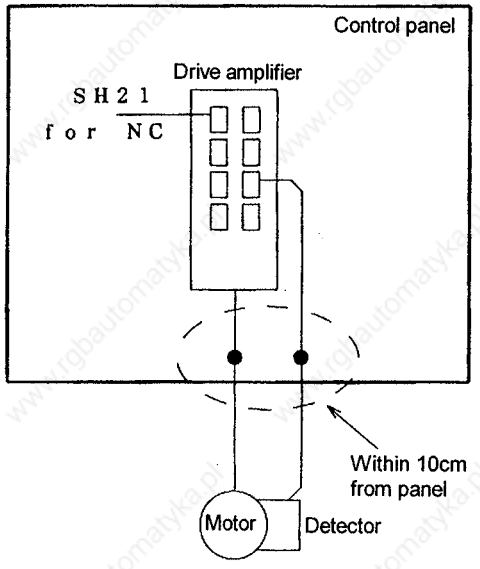

5.3 Servomotor power cable

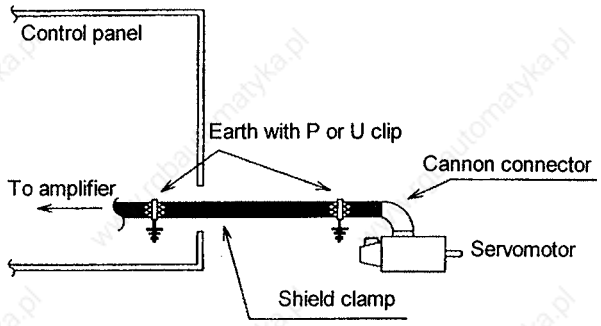

Using shield cable

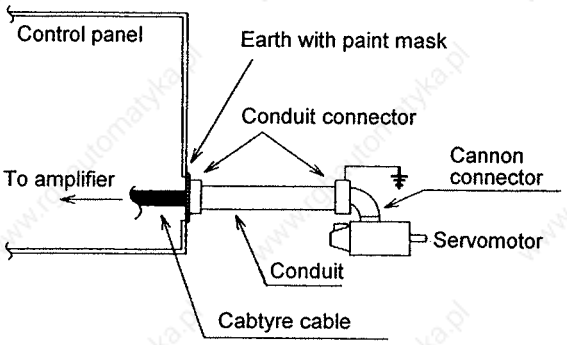

Using conduit

(1) Use four wires (3-phase + earthing) for the power cable, and use a cable that is completely shielded and that has no relay wires.
(2) Earth the shield on both the control panel side and motor chassis side.
(3) Earth the shield with a metal P clip or U clip.
(4) Directly earth the shield. Do not solder the shield onto a wire and earth the end.

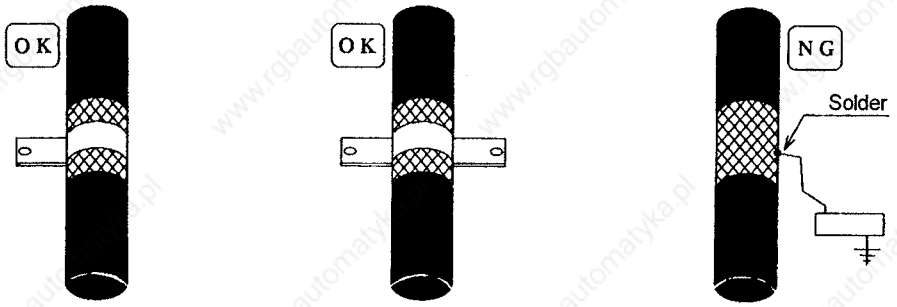

(5) When not using a shield cable for the power cable, use a conventional cabtyre cable. Use a metal conduit outside the cable.
(6) Earth the power cable on the control panel side with the conduit connector and control panel side wall. (Mask the side wall of the control panel with paint.)
(7) Use the type of treatment shown in the example for the conduit connector to earth the power cable on the motor side. (Example: Use a clamp fitting, etc.)

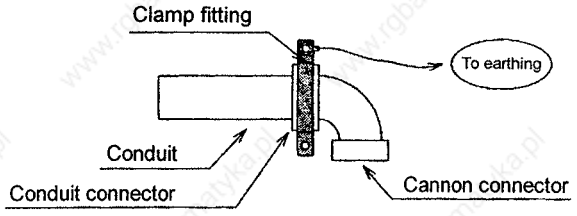

5.4 Servomotor feedback cable

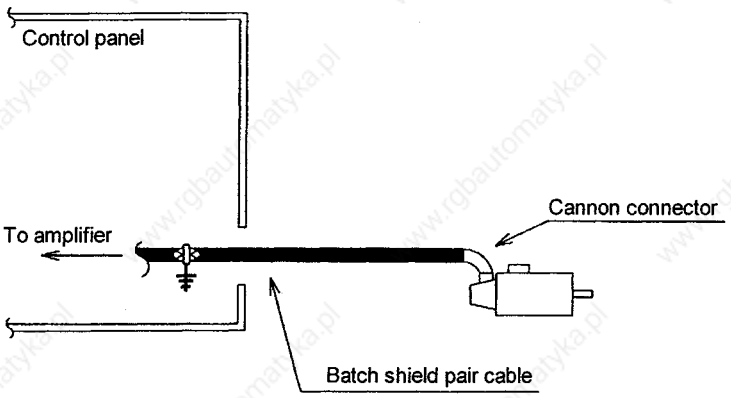

(1) Use the conventional batch pair shield cable for the servomotor's feedback cable. Earth on the NC side (control panel side).

5.5 Spindle motor power cable

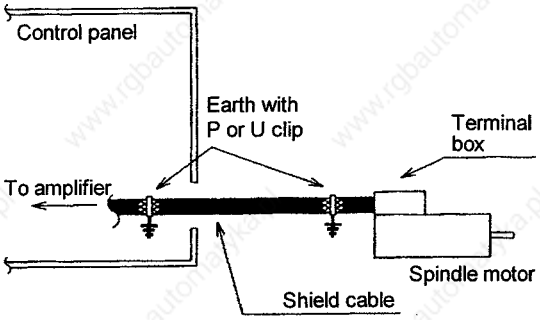

Using shield cable

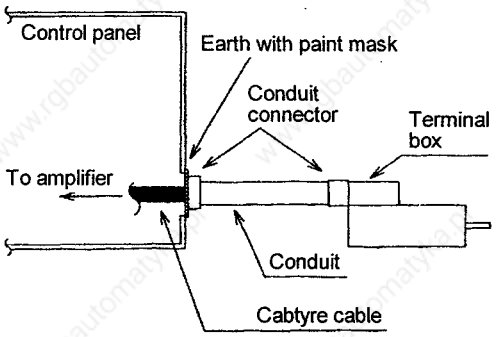

Using conduit

(1) Use four wires (3-phase + earthing) for the power cable, and use a cable that is completely shielded and that has no relay wires.
(2) Earth the shield with the same manner as the servomotor power cable.
(3) When not using a shield cable for the power cable, use a conventional cabtyre cable. Use a metal conduit outside the cable.
(4) Earth the power cable on the control panel side with the conduit connector and control panel side wall in the same manner as the servomotor power cable. (Mask the side wall of the control panel with paint.)
(5) Earth with the conduit connector section in the same manner as the servomotor drive cable.

5.6 Spindle motor feedback cable

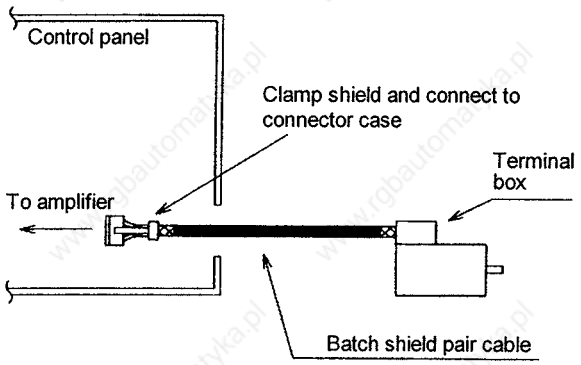

(1) Use the conventional batch pair shield cable for the spindle motor's feedback cable.
Note) The shield of the spindle motor feedback cable is an AG (Analog Ground), so do not earth it.

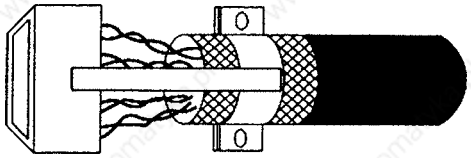

Spindle amplifier side connector (View of state with cover removed)

5.7 Cable between control panel and operation board panel

(1) Use a shield cable for the cable between the control panel and operation board.
(2) Earth the shield in the same manner as the other cables.
(3) Insert a ferrite core in the SH11 cable at a position within 10cm from the device. (This provides a better effect.)

SH11 cable (signal cable)

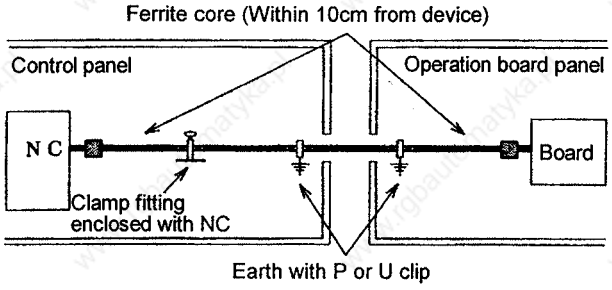

PO05 cable (power supply cable)

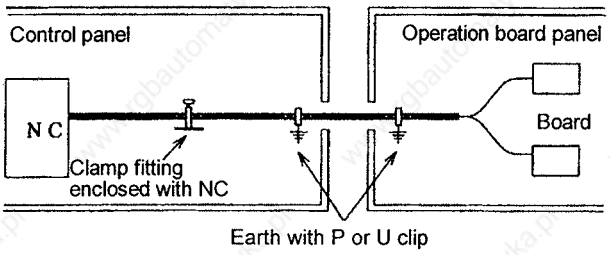

6. Measures for noise filter

The power supply line filter is an indispensable part for conductive noise measures, so always use one taking the following measures into consideration.

6.1 Measures in panel

(1) If the power supply line filter's input and output wires are close, the noise from the contaminated output wire will be conveyed through the air and contaminate the input wire. Thus, always separate and wire (30cm or more) the input and output wires of the filter.

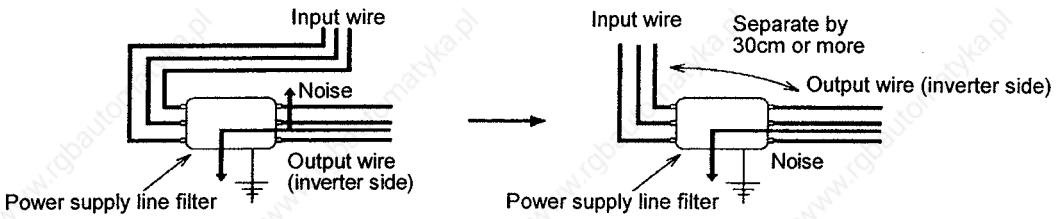

(2) Install the power supply line filter directly onto the metal surface of the control panel opening that has been masked with paint.

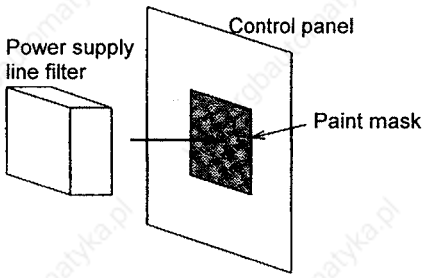

(3) Do not lead the input wire in the panel without passing through the filter. Use a shield cable when the wire must be led.

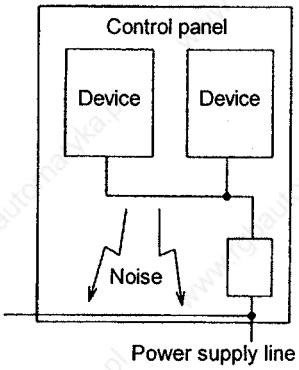

The noise from other devices (cables) will contaminate the input wire that does not pass the filter.

(4) Insertion of a noise filter between the motor and drive amplifier is also an effective measure. The precaution points regarding the wiring and installation are the same as for the power supply line filter.

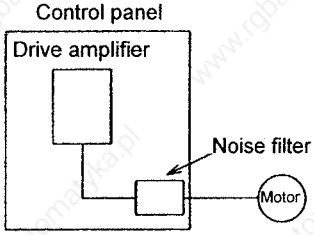

6.2 Precautions for using ferrite core

(1) Install the ferrite core on the NC/drive section signal wire. The installation place must be within 10cm from the device.

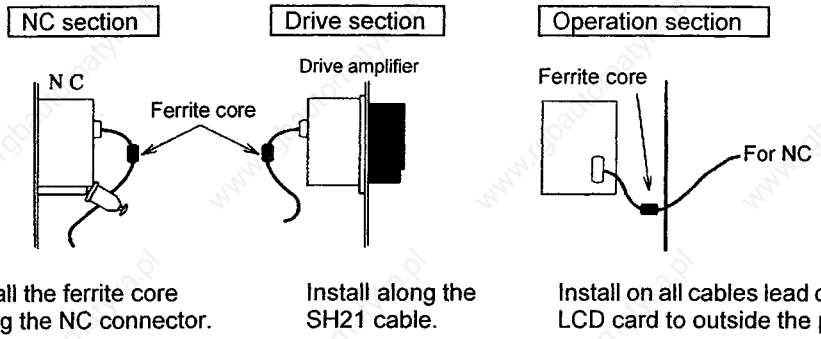

Install the ferrite core along the NC connector.

Install along the SH21 cable.

Install on all cables lead out from the LCD card to outside the panel.

6.3 Mitsubishi recommended parts

Mitsubishi recommends the following parts for EMC measures.

Noise measure enforcement place		Measure part	Recommended part	Remarks
Input power supply section		Power supply line filter	Soshin Electric HF30□□A-TM Series	Attached catalog
Drive amplifier output section		Noise filter	Soshin Electric CC30□□C-AZ Series	
Machine side inductive electric parts (relay, etc.)	AC circuit	CR snubber circuit		
	DC circuit	Diode		
Signal wire		Ferrite core	TDK ZACT Series	Attached catalog

HF3000A-TM/HF3000C-TM Series

- 3-phase, 3-wire type (250V system, 500V system)
- Noise Standards [German Official Report Vfg243, European Standards EN55011 (Class B)] compatible part.
- Effective as an IGBT inverter and MOS-FET inverter.
- Installation is easy with terminal block structure, and reliability is outstanding.

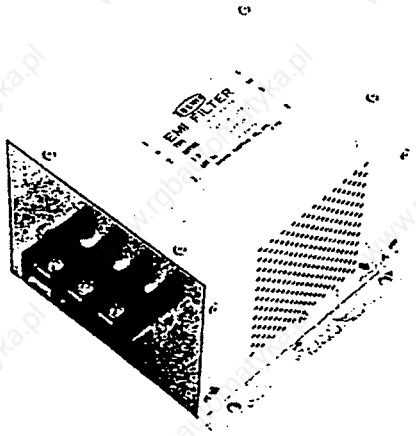

<Application>

- Products that must clear Noise Standards [German Official Report Vfg243, European Standards EN55011 (Class B)].
- For input of electricity converter using advanced high-speed power device such as IGBT MOS-FET.

<Performance>

<250V system>

Part name	HF3005A-TM	HF3010A-TM	HF3015A-TM	HF3020A-TM	HF3030A-TM	HF3040A-TM	HF3050A-TM	HF3060A-TM	HF3080A-TM	HF3100A-TM
Rated voltage	250VAC									
Rated current	5A	10A	15A	20A	30A	40A	50A	60A	80A	100A
Leakage current	1.5mA Max 250VAC 60Hz									

<500V system>

Part name	HF3005-TM	HF3010-TM	HF3015-TM	HF3020-TM	HF3030-TM	HF3040-TM	HF3050-TM	HF3060-TM	HF3080-TM	HF3100-TM
Rated voltage	500VAC									
Rated current	5A	10A	15A	20A	30A	40A	50A	60A	80A	100A
Leakage current	3mA Max 500VAC 60Hz									

<Noise terminal voltage measurement example> ..... Measured with IGBT inverter

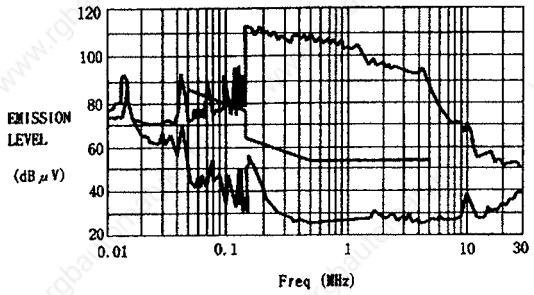

German Official Report Vfg243 measurement data

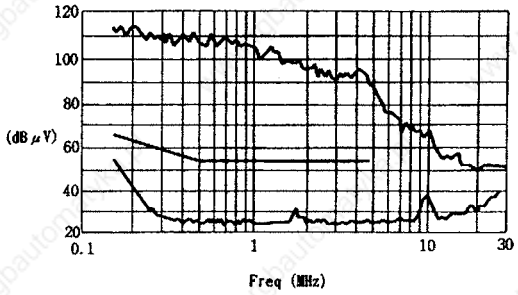

European Standards EN55011 Class B measurement data

<Main characteristics>

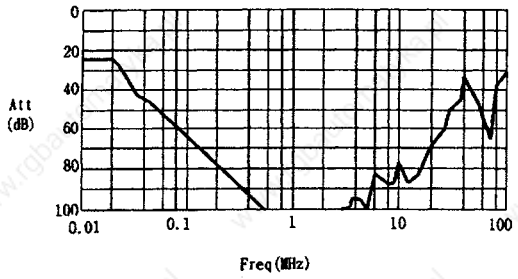

<Circuit diagram>

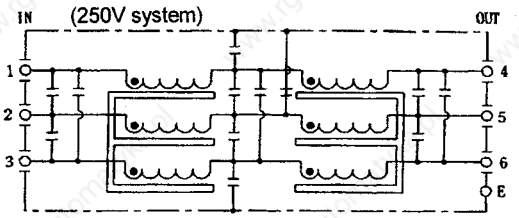

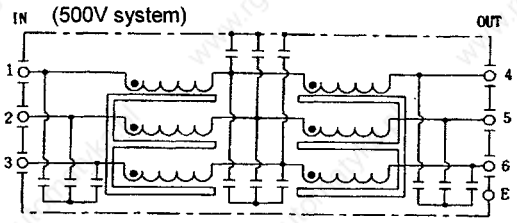

<Outline dimensions>

Part name	Dimensions (unit: mm)			Part name	Dimensions (unit: mm)		
	A	B	C		A	B	C
HF3005A-TM	175	170	130	HF3005C-TM	170	170	150
HF3010A-TM				HF3010C-TM			
HF3015A-TM				HF3015C-TM			
HF3020A-TM				HF3020C-TM			
HF3030A-TM	260	155	140	HF3030C-TM	260	155	160
HF3040A-TM				HF3040C-TM			
HF3050A-TM	290	190	230	HF3050C-TM	290	190	250
HF3060A-TM				HF3060C-TM			
HF3080A-TM	405	220	240	HF3080C-TM	405	220	260
HF3100A-TM				HF3100C-TM			

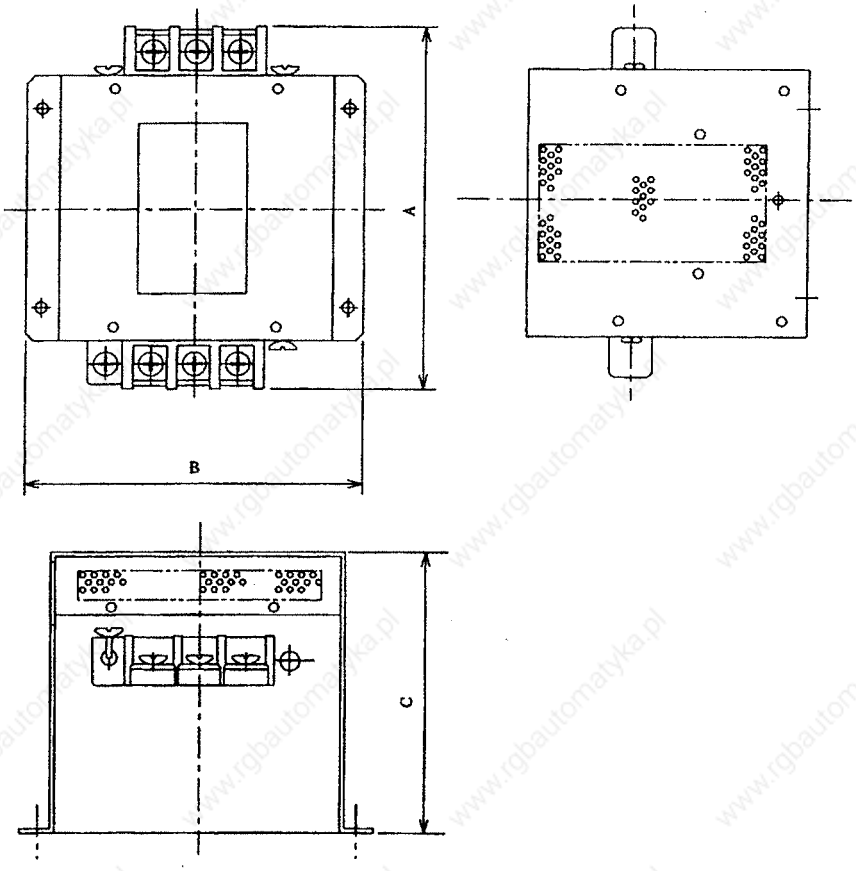

CC3000C-AZ Series Terminal block type

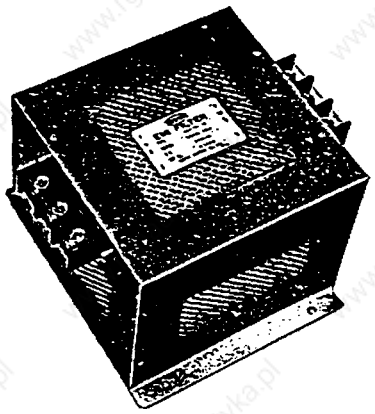

- 3-phase, 3-wire type (500V system)
- Dedicated reactor type for inverter secondary side (load side).
- Noise radiated on the inverter output side is dampened.
- Series is available up to 150A.

<Application>

- For secondary side (load side) of general-purpose and large capacity inverter powers.

<Performance> (500V system)

Part name	CC3005C-AZ	CC3010C-AZ	CC3015C-AZ	CC3020C-AZ	CC3030C-AZ	CC3040C-AZ	CC3050C-AZ	CC3060C-AZ	CC3080C-AZ	CC3100C-AZ	C3115C-AZ	CC3150C-AZ
Rated voltage	500VAC											
Rated current	5A	10A	15A	20A	30A	40A	50A	60A	80A	100A	115A	150A

<Main characteristics>

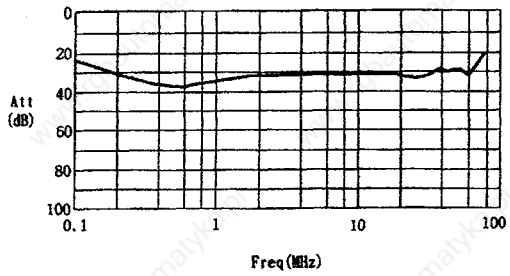

<Circuit diagram>

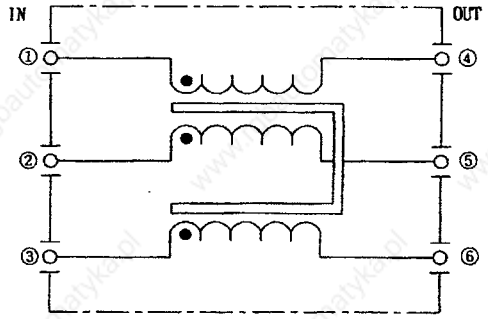

<Outline dimensions>

(1)

Part name	Dimensions (Unit: mm)											
	A	B	C	D	E	F	G	H	J	L	N	P
CC3005C-AZ	154.5	140	125	110	95	70	32	50	20	M4	ø4.5	R2.25 length 6
CC3010C-AZ												
CC3015C-AZ												
CC3020C-AZ	174.5	160	145	130	110	80		70	25			
CC3030C-AZ												

(2)

Part name	Dimensions (Unit:mm)										
	A	B	C	D	E	F	G	H	J	L	N
CC3035C-AZ	170	120	80	150	135	120	44	120	90	M5	ø5.5
CC3045C-AZ	230	180	100	220	200	180	44	170	140	M6	ø6.5
CC3060C-AZ											
CC3080C-AZ	260	210	150	250	230	210	57	170	140	M8	ø6.5
CC3100C-AZ											
CC3115C-AZ											
CC3150C-AZ	277	220	160	260	240	220	57	170	140	M8	ø6.5

5A to 30A

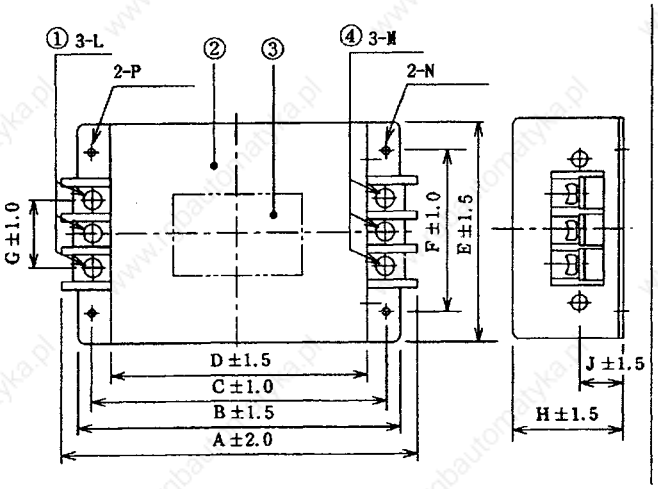

35A to 150A

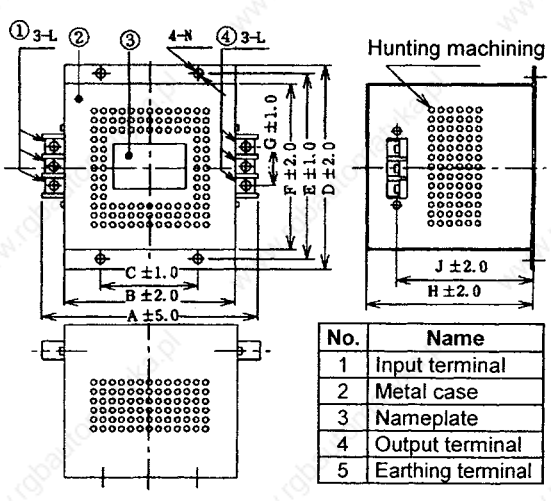

No.	Name
1	Input terminal
2	Metal case
3	Nameplate
4	Output terminal
5	Earthing terminal

Product Identification

ZCAT	20	35	–	09	30	A	–	BK
(1)	(2)	(3)		(4)	(5)	(6)		(7)

(1) Series name
(2) Outside diameter in mm
(3) Length in mm
(4) Inside diameter in mm
(5) Material
(6) A : Self-hold (cable-rock mechanism) type
B : Self-hold (chassis-hold mechanism) type
None : Band-hold type
(7) Color BK : Black
None : Gray

Construction

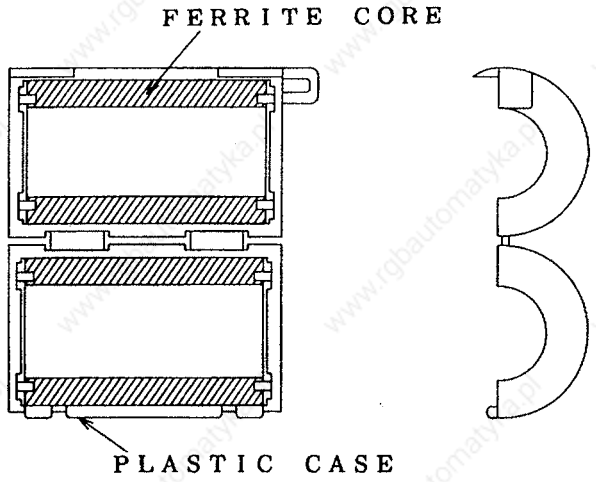

Appendix 3. Unit Systems

The correspondence of the conventional unit symbols used in this manual and the international unit system (SI) is shown below.

Name of mass	Conventional unit symbol	SI unit and unit symbols which can be used in combination	Conversion value
Weight/load (to express mass)	kgf	———	The numerical value is the same
Mass	——	kg	
Weight/load (to express concept of force)	kgf	N	1 kgf = 9.80665N
Force	kgf	N	1 kgf = 9.80665N
Torque	kgf • cm	N • m	1 kgf•cm = 9.80665×10^{-2} N•m
Inertia (J)	kgf • cm • S^2	kg • m^2	1kgf•cm•S^2 = 9.80665×10^{-2} kg•m^2
GD^2	kgf • cm^2	———	$J = \frac{GD^2}{4g}$ (g: Acceleration of gravity 980cm/s^2)
Rotation speed • Speed	rpm	r/min • min^{-1}	1rpm = 1r/min = $1min^{-1}$

I. Precautions for Installation in UL/c-UL Applications

1. General precautions

The discharge time of the main circuit capacitor is approximately 10 minutes.
Turn the power OFF and wait at least 15 minutes before starting wiring or investigations to prevent electric shock accidents.

2. Installation

The MDS-B Series is designated for installation in a panel.
Design the capacity of the panel so that the total capacity of each MDS-B Series unit in the panel is 150% or more, and the temperature in the panel does not exceed 55°C.
(Refer to Chapter 1 sections 3 and 7 in the Specifications Manual.)

3. Short-circuit rating

The UL short-circuit test has been carried out for the MDS-B Series with an AC circuit having a peak current limited to 5000A or less. The circuit is compatible with this rating.

4. Peripheral devices

Select peripheral devices compliant with the UL/c-UL Standards.

- The NFB, fuse, magnetic contactor and AC reactor are shown below for reference.

Applicable power supply unit	NFB	Fuse Class K5	Magnetic contactor (AC3)	AC reactor BKO-NC6851-
MDS-B-CVE-37	NF50 40A	70A	S-N25	H11 (B-AL-7.5K)
MDS-B-CVE-55	NF50 40A	100A	S-N25	H11 (B-AL-7.5K)
MDS-B-CVE-75	NF50 40A	100A	S-N25	H11 (B-AL-7.5K)
MDS-B-CVE-110	NF50 50A	100A	S-N35	H12 (B-AL-11K)
MDS-B-CVE-150	NF100 100A	200A	S-N50	H13 (B-AL-18.5K)
MDS-B-CVE-185	NF100 100A	200A	S-N50	H13 (B-AL-18.5K)
MDS-B-CVE-220	NF225 150A	200A	S-N80	H14 (B-AL-30K)
MDS-B-CVE-260	NF225 150A	300A	S-N80	H14 (B-AL-30K)
MDS-B-CVE-300	NF225 150A	300A	S-N80	H14 (B-AL-30K)
MDS-B-CVE-370	NF225 175A	300A	S-N150	H15 (B-AL-37K)

- Circuit breaker for spindle motor fan
  Select the circuit breaker for the spindle motor fan using a value approximately double the rated current as a guideline.
  (A current approximately double the rated current will flow when the fan is started.)

Caution:

- For installation in United States, branch circuit protection must be provided, in accordance with the National Electrical Code and any applicable local codes.
- For installation in Canada, branch circuit protection must be provided, in accordance with the Canada Electrical Code and any applicable provincial codes.

5. Servomotor installation

Install the servomotor on a flange having the size shown below, or on a flange having a cooling performance equal or more than the following flanges.

Flange size (mm)	Servomotor				
	HC-□	HC-RF□	HC-MF□	HA-FF□	HC-SF□
150 × 150 × 6	–	–	under 100W	under 100W	–
250 × 250 × 6	–	–	200W	200, 300W	–
250 × 250 × 12	0.5 to 1.5kW	1.0 to 2.0kW	400W	400, 600W	0.5 to 1.5kW
300 × 300 × 12	–	–	750W	–	–
300 × 300 × 20	2.0 to 7.0kW	–	–	–	2.0 to 7.0kW

6. Motor overload protection

The servo drive unit MDS-B-V1/2/14/24 Series and spindle drive unit MDS-B-SP Series each have an electronic motor overload protection circuit.
Refer to the following tables for details on adjusting the motor overload.

6.1 MDS-B-V1/2/14/24

Parameter No.	Parameter abbrev.	Parameter name	Setting outline	Standard setting value	Setting range
SV021	OLT	Overload time constant	Set the overload detection time constant. (1-sec. unit)	60 (sec.)	1 to 300 (sec.)
SV022	OLL	Overload detection level	Set the overload current detection level as a percentage (%) of the stall rating.	150 (%)	1 to 500 (%)

6.2 MDS-B-SP

Parameter No.	Parameter abbrev.	Parameter name	Setting outline	Standard setting value	Setting range
SV063	OLT	Overload time constant	Set the overload detection time constant. (1-sec. unit)	60 (sec.)	1 to 1000 (sec.)
SV064	OLL	Overload detection level	Set the overload current detection level as a percentage (%) of the rating.	110 (%)	1 to 200 (%)

7. Unit connection

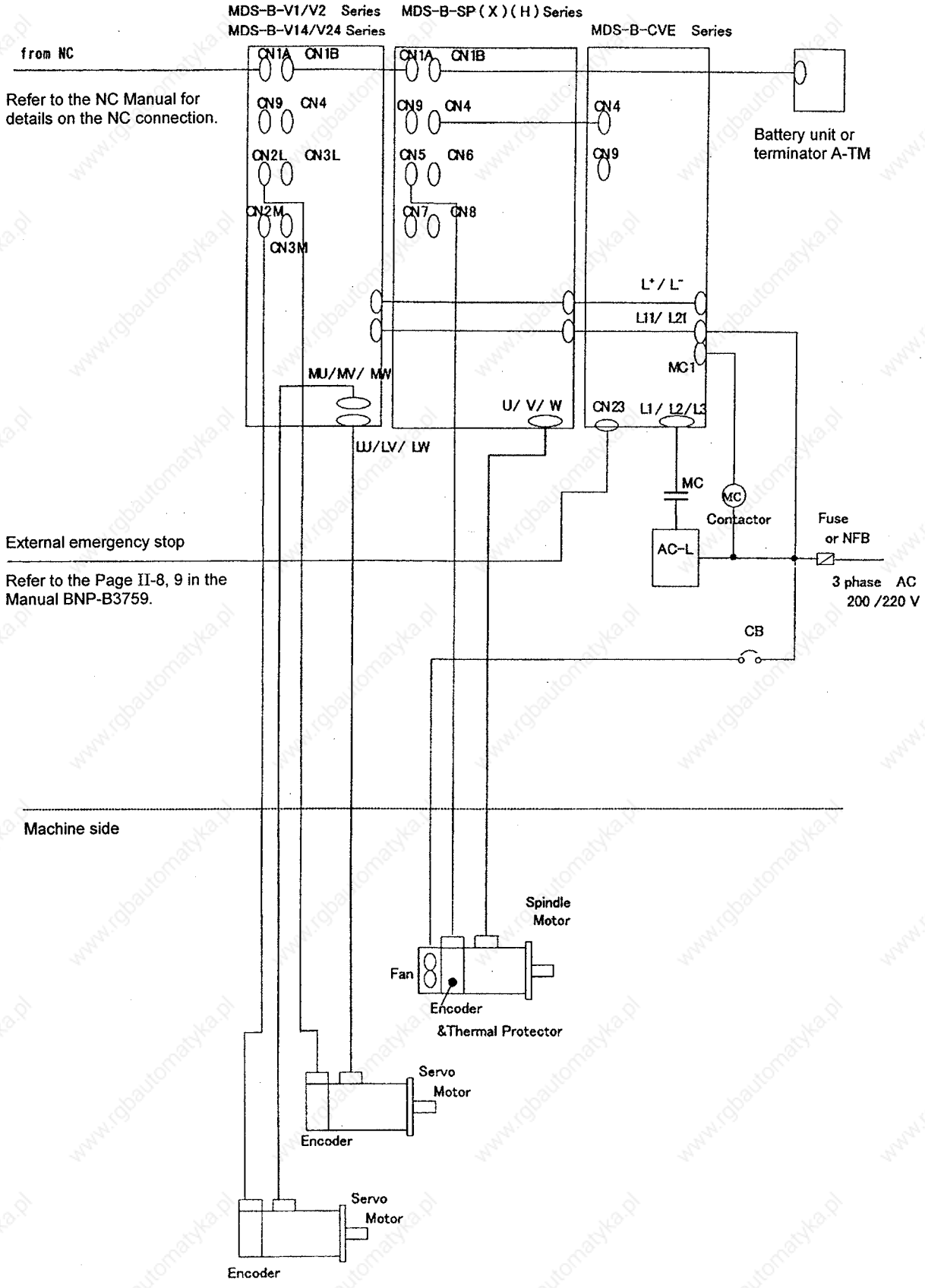

8. External wiring

Use the UL-recommended round crimp terminal for the input/output wiring, and use the terminal maker-designated tool for crimping.
The crimp terminal and crimping tool for J.S.T. Mfg. Co., Ltd. are shown below for reference.

8.1 Power supply unit

Capacity [kW]		3.7 to 7.5	11.0	15.0 to 18.5	22.0 to 37.0
Terminal block	P, N (L+, L–)	M6	M6	M6	M6
	Screw tightening torque [lb in/N·m]	44.3/5.0	49.6/5.6	49.6/5.6	49.6/5.6
	L11, L21 (R0, S0), MC1	M4	M4	M4	M4
	Screw tightening torque [lb in/N·m]	17.4/2.0	7.8/0.88	7.8/0.88	7.8/0.88
	L1, L2, L3	M4	M5	M5	M8
	Screw tightening torque [lb in/N·m]	14.6/1.6	29.8/3.37	29.8/3.37	117.2/13.2

P, N (L+, L–)

Capacity [kW]	3.7, 5.5	7.5	11.0	15.0	18.5, 22.0	26.0	30.0	37.0
Wire size (AWG)/ temperature rating Note 1	#11/60°C	#9/60°C	#5/60°C	#5/60°C	#3/60°C	#1/60°C	#2/0/60°C	#2/0/60°C
	#14/75°C	#11/75°C	#8/75°C	#5/75°C	#5/75°C	#3/75°C	#1/75°C	#1/0/75°C
Crimp terminal	3.5-6	R5.5-6	R14-6	R14-6	R22-6	38-S6	L330T 459-12	L330T 459-12
	R2-6	3.5-6	R8-6		R14-6	R22-6	38-S6	
Crimping tool	YHT-2210		YHT-14S	YHT-14S	YPT-60	YPT-60	YET300 YF-1	YET300 YF-1
			YHT-8S		YHT-14S		YPT-60	

L11, L21 (R_0, S_0), MC1

Capacity [kW]	3.7 to 37.0
Wire size (AWG)/ temperature rating Note 1	#14/60°C
	#14/75°C
Crimp terminal	V2-4
Crimping tool	YNT-1614

L1, L2, L3

Capacity [kW]	3.7	5.5	7.5	11.0	15.0	18.5
Wire size (AWG)/ temperature rating Note 1	#11/60°C	#11/60°C	#9/75°C	#5/60°C	#3/60°C	#2/60°C
	#14/75°C	#11/75°C		#5/75°C	#5/75°C	#3/75°C
Crimp terminal	3.5-R4	3.5-R4	5.5-S4	R14-5	22-S6	L330T 459-23
	R2-4				R14-5	22-S6
Crimping tool	YHT-2210			YHT-14S	YPT-60	YPT-60
					YHT-14S	YPT-60

Capacity [kW]	22.0	26.0	30.0	37.0
Wire size (AWG)/ temperature rating Note 1	#1/60°C	#1/0//60°C	#2/0//60°C	1/0/75°C
	#2/75°C	#1/75°C	#1/75°C	
Crimp terminal	38-S8	L330T 459-12		L330T 459-12
		38-S8		
Crimping tool	YPT-60	YET300 YF-1		YET300 YF-1
		YPT-60		

8.2 Servo drive unit

Type		1-axis (V1, V14)				2-axis (V2, V24)	
Capacity [kW]		0.1 to 3.5	4.5	7.0, 9.0	11.0, 15.0	0.1+2 to 2.0+2	3.5+1.0 to 4.5+3.5
Terminal block	P, N (L+, L–)	M6	M6	M6	M6	M6	M6
	Screw tightening torque [lb in/N·m]	44.3/5.0	44.3/5.0	44.3/5.0	44.3/5.0	44.3/5.0	44.3/5.0
	L11, L21 (R0, S0)	M4	M4	M4	M4	M4	M4
	Screw tightening torque [lb in/N·m]	17.4/2.0	17.4/2.0	17.4/2.0	17.4/2.0	17.4/2.0	17.4/2.0
	U, V, W	M4	M5	M5	M8	M4	M4
	Screw tightening torque [lb in/N·m]	14.6/1.6	28.6/3.2	28.6/3.2	117.2/13.2	14.6/1.6	14.6/1.6

P, N (L+, L–)

The wire size is determined according to the connected power supply unit (MDS-B-CVE Series).

L11, L21 (R_0, S_0)

Capacity [kW]	0.1 to 15.0
Wire size (AWG)/ temperature rating	#14/60°C
Note 1	#14/75°C
Crimp terminal	V2-4
Crimping tool	YNT-1614

U, V, W

Capacity [kW]	0.1, 0.3	0.5, 1.0	2.0	3.5, 4.5		7.0	9.0	11.0	15.0
Wire size (AWG)/ temperature rating	#16/60°C	#14/60°C	#11/60°C	#9/60°C		#8/60°C	#8/60°C	#5/60°C	#2/60°C
Note 1	#16/75°C	#14/75°C	#14/75°C	#11/75°C		#9/75°C	#8/75°C	#5/75°C	#3/75°C
Crimp terminal	R1.25-4	R2-4	3.5-R4	5.5-S4	5.5-S4 R5.5-5	R8-5	R8-5	R14-8	38-S8
			R2-4	3.5-R4	3.5-R5	R5.5-5			R22-8
Crimping tool	YHT-2210					YHT-8S	YHT-8S	YHT-14S	YPT-60
						YHT-2210			

8.3 Spindle drive unit

Capacity [kW]		0.4 to 3.7	5.5 to 11.0	15.0, 18.5	22.0 to 30.0	37.0
Terminal block	P, N (L+, L–)	M6	M6	M6	M6	M10
	Screw tightening torque [lb in/N·m]	44.3/5.0	44.3/5.0	44.3/5.0	44.3/5.0	234.3/26.5
	L11, L21 (R0, S0)	M4	M4	M4	M4	M4
	Screw tightening torque [lb in/N·m]	17.4/2.0	17.4/2.0	17.4/2.0	17.4/2.0	17.4/2.0
	U, V, W	M4	M5	M5	M8	M8
	Screw tightening torque [lb in/N·m]	14.6/1.6	28.6/3.2	28.6/3.2	117.2/13.2	88.5/10.0

P, N (L+, L–)

The wire size is determined according to the connected power supply unit (MDS-B-CVE Series).

L11, L21 (R_0, S_0)

Capacity [kW]	0.4 to 37.0
Wire size (AWG)/ temperature rating Note 1	#14/60°C
	#14/75°C
Crimp terminal	V2-4
Crimping tool	YNT-1614

U, V, W

Capacity [kW]	0.4, 0.75	1.5 to 3.7, 5.5		7.5	11.0	15.0	18.5	22.0	26.0	30.0	37.0
Wire size (AWG)/ temperature rating Note 1	#14/ 60°C	#11/60°C		#9/ 60°C	#8/ 60°C	#5/ 60°C	#3/ 60°C	#2/ 60°C	#1/ 60°C	#2/0/ 60°C	#1/0/ 75°C
	#14/ 75°C	#14/75°C		#11/ 75°C	#9/ 75°C	#5/ 75°C	#5/ 75°C	#3/ 75°C	#2/ 75°C	#1/ 75°C	
Crimp terminal	R2-4	3.5-R4	3.5-R5	R5.5-5	R8-5	R14-5	22-S6	38-S8	38-S8	L330T 459-12	R60-8
		R2-4	R2-5	3.5-R5	R5.5-5		R14-5	R22-8		38-S8	
Crimping tool	YHT-2210				YHT-8S	YHT-14S	YPT-60	YPT-60		YET300 YF-1	YET300 YF-1
					YHT-2210		YHT-14S			YPT-60	

Note 1: 60°C: 600V vinyl insulated wire (IV wire)
75°C: 600V heat-resistant vinyl insulated wire/600V polyethylene insulated wire/(HIV wire)
The conductors must be copper.

9. Spindle drive unit and motor combination

The combinations of the standard spindle drive unit and motor are shown below.

Drive unit	Applicable motor output (kW)	
	SJ-( ) Series SJ-V/VL Series Note: 1	SJ-N Series SJ-NL Series
MDS-B-SP/SPH/SPX-04		0.2
MDS-B-SP/SPH/SPX-075		0.75
MDS-B-SP/SPH/SPX-15		1.5
MDS-B-SP/SPH/SPX-22	2.2	2.2
MDS-B-SP/SPH/SPX-37	3.7	3.7
MDS-B-SP/SPH/SPX-55	5.5	5.5
MDS-B-SP/SPH/SPX-75	5.5 7.5	7.5
MDS-B-SP/SPH/SPX-110	5.5 7.5 11	11
MDS-B-SP/SPH/SPX-150	7.5 11 15	
MDS-B-SP/SPH/SPX-185	11 15 18.5	
MDS-B-SP/SPH/SPX-220	11 15 18.5 22	
MDS-B-SP/SPH/SPX-260	11 15 18.5 22 26	
MDS-B-SP/SPH/SPX-300	15 18.5 22 26 30	
MDS-B-SP/SPH/SPX-370	15 18.5 22 26 30 37	

Note 1: The applicable drive unit will differ according to the motor's rated output range and characteristics.
Contact Mitsubishi for details on the combinations.

II. MDS-B-CVE

1. Introduction

The MDS-B-CVE Series is the upward series of the MDS-B-CV Series. The specifications are the same as the MDS-B-CV Series except for the following matters.

- The depth of the MDS-B-CVE is smaller than the MDS-B-CV. (Upper compatible)
- The position of the connectors CN4, CN9, CN23 and the grounding terminal have been changed.
- Alarms #65 and 6B have been eliminated.

2. Outline

(1) Models

Type MDS-B-	Capacity (kW)	Weight (kg)	Dimensions (H*W*D mm)	Appearance type
CVE-37	3.7	3.5	380*60*200	A1
CVE-55	5.5	4.0	380*60*200	
CVE-75	7.5	4.0	380*60*200	
CVE-110	11	6.0	380*90*285	B1
CVE-150	15	7.0	380*120*285	C1
CVE-185	18.5	7.0	380*120*285	
CVE-220	22	9.0	380*150*300	D1
CVE-260	26	9.0	380*150*300	
CVE-300	30	9.5	380*150*300	
CVE-370	37	9.5	380*150*300	

(2) Dimensions

Appearance type H*W*D mm	A1	B1	C1	D1
	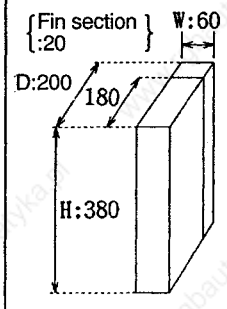	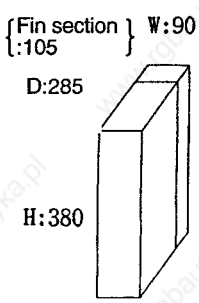	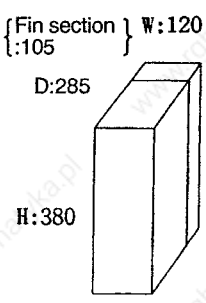	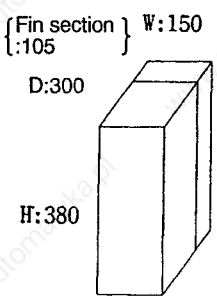

⚠ CAUTION

When carrying the unit, do not hold the plastic case section as the unit could drop. Securely hold the aluminum fin section with both hands. Take care to the edges of the fins when holding the section.

(3) Details of appearance and dimensions.

Note 1: The positions of the CN4 and CN9 for the MDS-B-CVE-37 to 185 have been moved 39mm below the positions for the MDS-B-CV Series.

Note 2: The grounding ⏚ has been changed from the terminal block to the screw on the unit installation base.

B-CVE-37
-55
-75

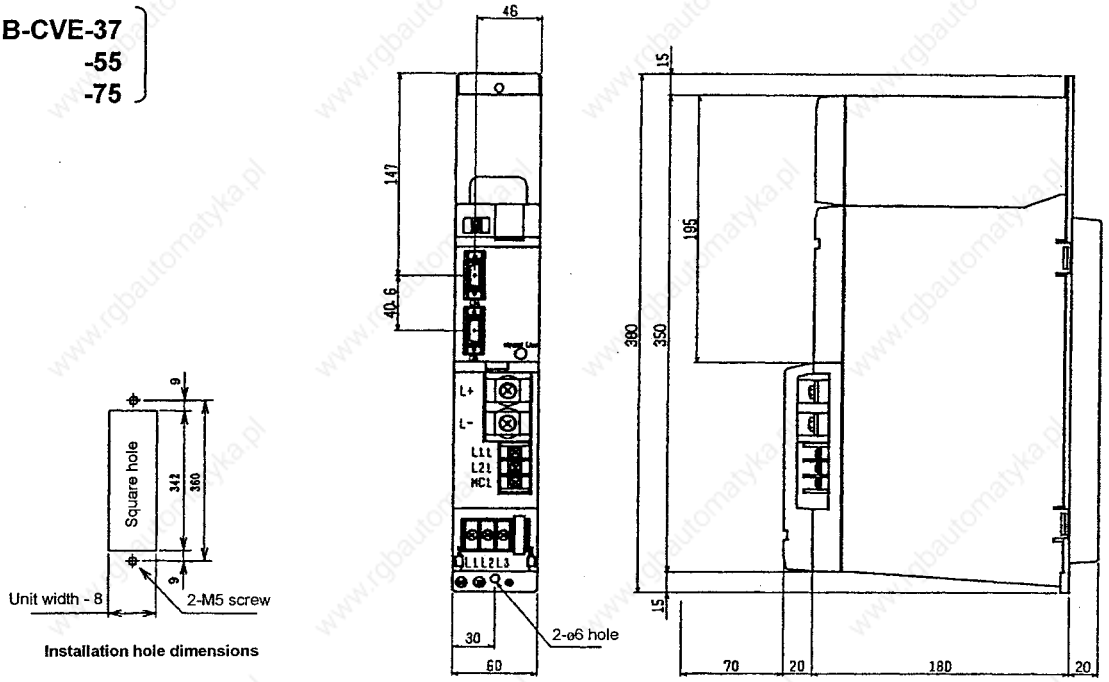

Installation hole dimensions

B-CVE-110 **B-CVE-150** **-185**

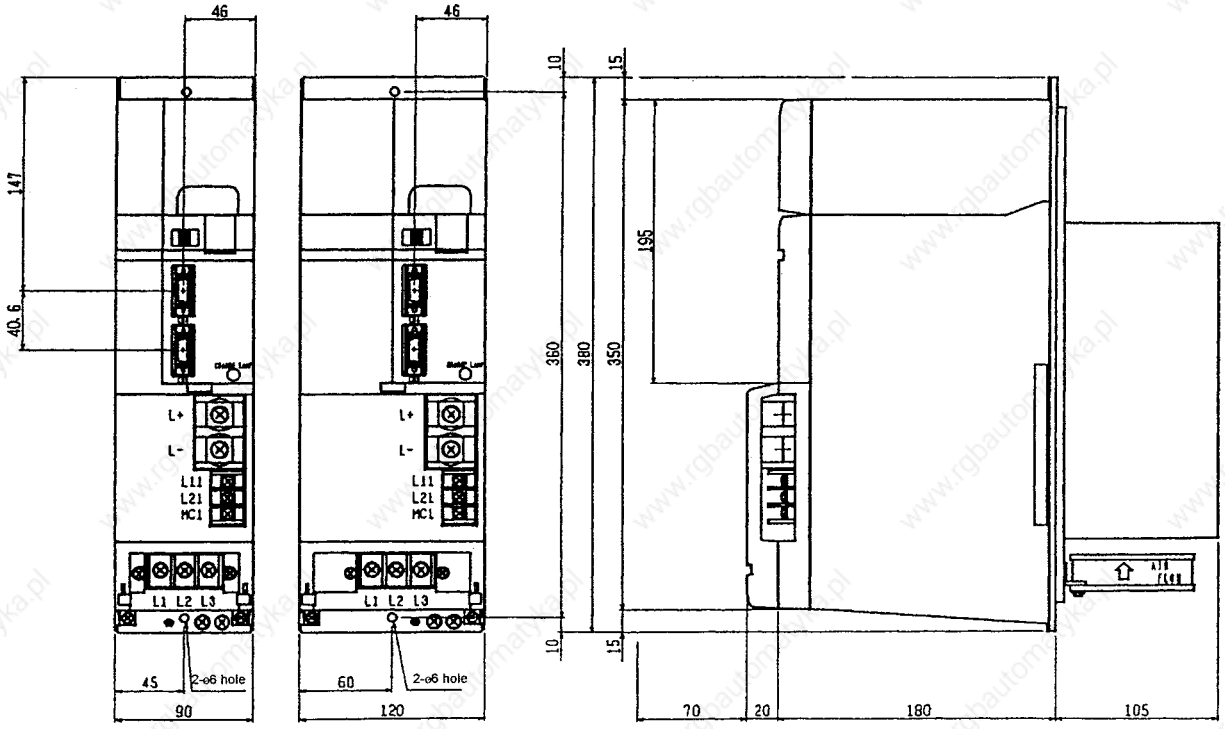

B-CVE-220
-270
-300
-370

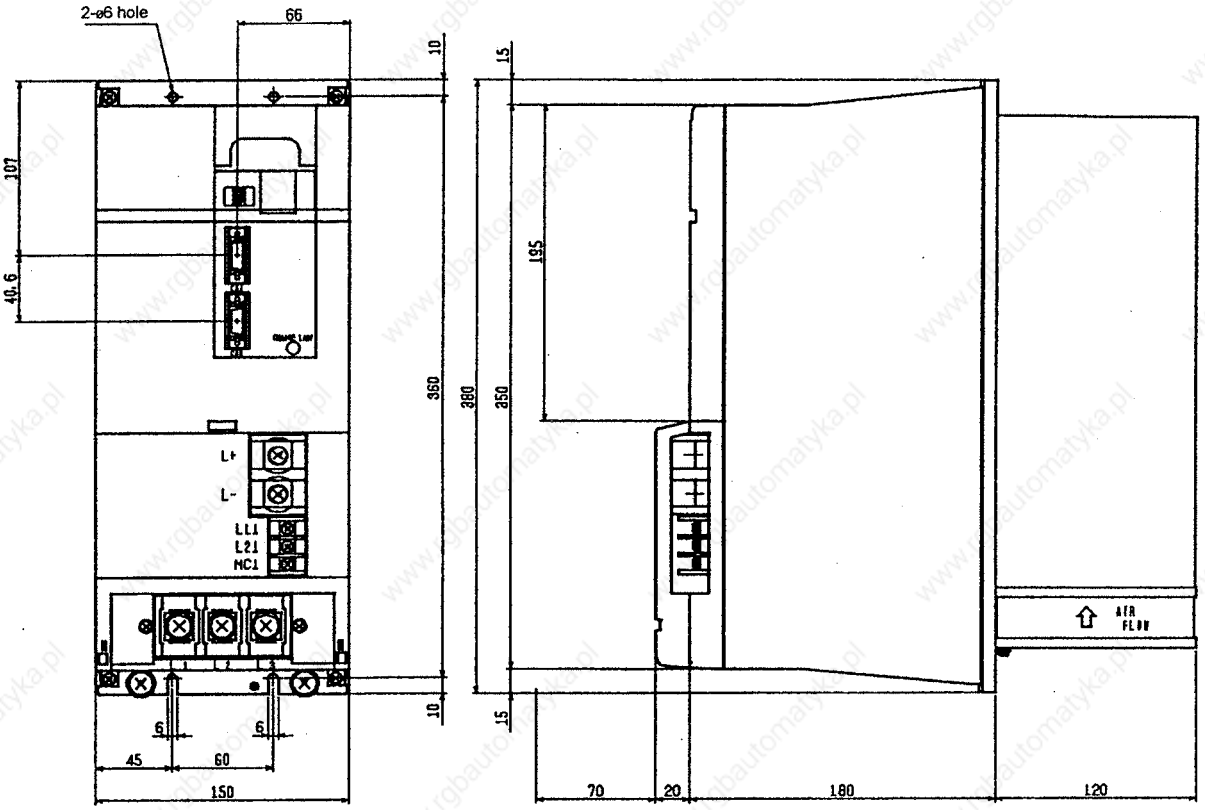

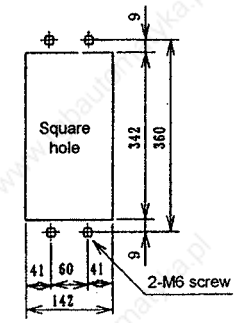

Installation hole dimensions

Revision History

Printing date	Specification manual No.	Revision details
Mar., 1993	BNP-B3759*	Printing of first version.
Dec., 1995	BNP-B3759A	Printing of second version The MDS-B Series specifications was added.
May., 1996	BNP-B3759B	Hazard information was added.

MITSUBISHI ELECTRIC CORPORATION
HEAD OFFICE : MITSUBISHI DENKI BLDG., 2-2-3, MARUNOUCHI, CHIYODA-KU, TOKYO 100-8310, JAPAN

MODEL	MDS-A/B Series
MODEL CODE	003—298
Manual No.	BNP-B3759B(ENG)

(0109) MEE

Specifications subject to change without notice.
Printed in Japan on recycled paper.