5–30 Watts
ECL Series

GREEN XP POWER

- Ultra Compact Size
- Single, Dual & Triple Outputs
- Open Frame PCB & Chassis Mount
- Encapsulated PCB Mount Versions
- <0.3 W No Load Input Power
- Peak Load Capability
- 3 Year Warranty

Specification

Input

Input Voltage	• 85-264 VAC (120-370 VDC)
Input Frequency	• 47-63 Hz
Input Current	• ECL05: 0.1 A rms, ECL10: 0.2 A rms ECL15: 0.3 A rms, ECL25: 0.4 A rms ECL30: 0.8 A rms at 230 VAC
Inrush Current	• 20 A at 115 VAC, 40 A at 230 VAC, cold start at 25 °C
Earth Leakage Current	• Class II construction no earth
Power Factor	• EN61000-3-2, class A
No Load Input Power	• <0.3 W
Input Protection	• ECL05/10: Internal T1 A/250 VAC fuse ECL15/25/30: Internal T2 A/250 VAC fuse

Output

Output Voltage	• See tables
Output Voltage Trim	• ±5% on output 1 only, on multiple output versions, V2 & V3 will track by same percentage, (not '-E' or '-S' versions)
Initial Set Accuracy	• ±1% for output 1, ±1% for output 2 of UD01 & UD02 versions, ±5% for output 2 & output 3 of other versions
Minimum Load	• Single output versions: none, Multi output versions: UD01 & UD02: 10% V1 & V2 UD03: 10% V1, 20% V2 UT02 & UT03: 10% V1, 20% V2 & V3 to meet regulation specifications
Start Up Delay	• 3 s max
Start Up Rise Time	• 14 ms max
Hold Up Time	• 16 ms typical for single output versions, 12 ms typical for multiple output versions, at full load & 115 VAC
Line Regulation	• ±0.5% max for single output versions and output 1 of multiple output versions, ±0.9% max for output 2 & output 3 of multiple output versions
Load Regulation	• 1% max for single output versions, for multiple output versions (see note 5)
Cross Regulation	• Multi output versions only (see note 5)
Transient Response	• 4% max deviation, recovery to within 1% in 500 µs for a 25% load change
Ripple & Noise	• Single output versions: 3.3-5 V versions: 50 mV pk-pk, 12-15 V versions: 120 mV pk-pk, 24-48 V versions: 200 mV pk-pk, Multiple output versions: 1% pk-pk on any output, 20 MHz bandwidth
Overvoltage Protection	• 115-140% Vnom, 195-216% Vnom ECL05/10/15/25 with 3.3 V
Overload Protection	• Single output versions: ECL05/10/15: 120-150%, ECL25: 120-170% of total power Multiple output versions: 140-200% of total power
Short Circuit Protection	• Trip and restart (hiccup mode)
Temperature Coefficient	• 0.05%/°C

General

Efficiency	• See tables
Isolation	• 3000 VAC Input to Output
Switching Frequency	• 70 kHz typical
Power Density	• ECL05: 2.25 W/In³ (PCB Mount version) ECL10: 5.50 W/In³ (PCB Mount version) ECL15: 5.30 W/In³ (PCB Mount version) ECL25: 5.90 W/In³ (PCB Mount version) ECL30: 7.10 W/In³ (PCB Mount version)
MTBF	• ECL05/10: >450 kHrs, ECL15/25/30: >400 kHrs, to MIL-HDBK-217F at 25 °C, GB

Environmental

Operating Temperature	• -20 °C to +70 °C, derate linearly from 100% at +50 °C to 50% at +70 °C
Cooling	• Convection-cooled
Operating Humidity	• 95% RH, non-condensing
Storage Temperature	• -40 °C to +85 °C
Operating Altitude	• 3000 m
Vibration	• 2 g, 10 Hz to 500 Hz, 10 mins/cycle, 60 mins each cycle

EMC & Safety

Emissions	• EN55032, level B conducted & radiated
Harmonic Currents	• EN61000-3-2, class A
Voltage Flicker	• EN61000-3-3
ESD Immunity	• EN61000-4-2, level 3 Perf Criteria A
Radiated Immunity	• EN61000-4-3, 10 V/m 80% mod Perf Criteria A
EFT/Burst	• EN61000-4-4, level 3, Perf Criteria A
Surge	• EN61000-4-5, installation class 3, Perf Criteria A
Conducted Immunity	• EN61000-4-6, 10 Vrms Perf Criteria A
Magnetic Fields	• EN61000-4-8, 10 A/m, Perf Criteria A
Dips & Interruptions	• EN61000-4-11, 30% for 10 ms, 60% for 100 ms, 100% for 5000 ms Perf Criteria A, B, B
Safety Approvals	• IEC60950-1:2005 Ed 2 / IEC62368-1:2014 UL 62368-1 & CAN/CSA C22.2 No. 62368-1-14, EN62368-1:2014/A11:2017

Models and Ratings

Output Power	Output Voltage	Output Current		Efficiency	Model Number[2]
		Nominal	Peak[1]		
4.3 W	3.3 VDC	1.30 A	1.69 A	72%	ECL05US03
5.0 W	5.0 VDC	1.00 A	1.30 A	75%	ECL05US05
5.0 W	9.0 VDC	0.55 A	0.71 A	78%	ECL05US09
5.0 W	12.0 VDC	0.41 A	0.54 A	78%	ECL05US12
5.0 W	15.0 VDC	0.33 A	0.44 A	80%	ECL05US15
5.0 W	24.0 VDC	0.21 A	0.27 A	82%	ECL05US24
5.0 W	48.0 VDC	0.10 A	0.13 A	82%	ECL05US48
8.6 W	3.3 VDC	2.60 A	3.38 A	72%	ECL10US03
10.0 W	5.0 VDC	2.00 A	2.60 A	75%	ECL10US05
10.0 W	9.0 VDC	1.10 A	1.43 A	78%	ECL10US09
10.0 W	12.0 VDC	0.83 A	1.08 A	78%	ECL10US12
10.0 W	15.0 VDC	0.67 A	0.87 A	80%	ECL10US15
10.0 W	24.0 VDC	0.42 A	0.55 A	82%	ECL10US24
10.0 W	48.0 VDC	0.21 A	0.27 A	82%	ECL10US48

Notes

1. Peak load lasting <30 s with a maximum duty cycle of 10%, average output power not to exceed nominal.
2. Add suffix to model number to define type: add '-P' for PCB mount, add '-T' for chassis mount, add '-E' for encapsulated.

Mechanical Details

Open Frame – PCB Mount (–P)

3D MODELS AVAILABLE ONLINE

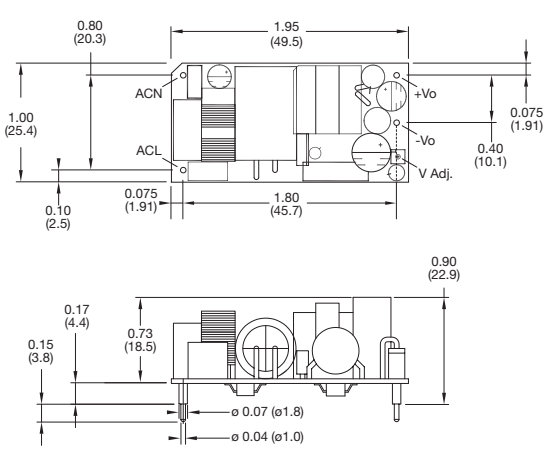

Encapsulated (–E)

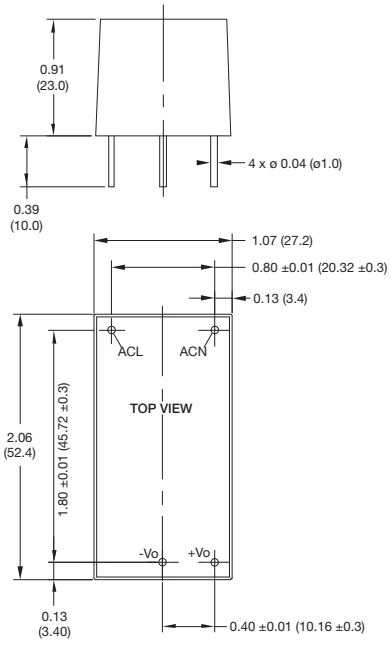

Open Frame – Chassis Mount (–T)

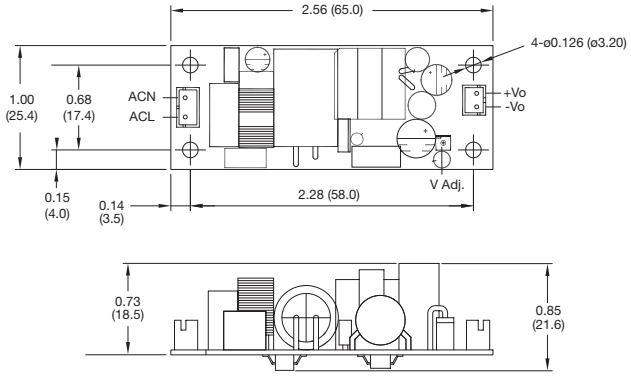

Notes

1. All dimensions in inches (mm).
2. Weight: ECL05/10 P Version: 0.057 lbs (26 g)
   ECL05/10 T Version: 0.057 lbs (26 g)
   ECL05/10 E Version: 0.13 lbs (60 g)
3. Tolerances: x.xx = ± 0.02 (x.x = ± 0.5)
   x.xxx = ± 0.01 (x.xx = ± 0.25)

Mating Connectors (-T version only)
Input Connector: JST PHR-3
Output Connector: JST PHR-2
Crimps: SPH-002T-P0.5S
Cable harness with 300 mm wire available, order part no. ECL10 LOOM KIT