1/2 Watt

- Output voltages from 100VDC to 10,000VDC
- Output Proportional to Input
- 0.7VDC Turn-on Voltage
- Wide Operating Temperature Range
- Short Circuit Protection
- Low Ripple <1%
- 500VDC Input to Output Isolation
- No minimum load
- 3 Year Warranty

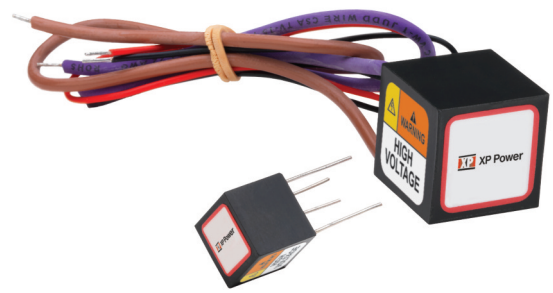

The Q Series is a broad line of ultra-miniature, high reliability DC to HV DC converters supplying up to 5,000 volts in only 0.125 cubic inches and up to 10,000 volts in only 0.614 cubic inches. Input voltage can be 5V, 12V, 15V, or 24V. The output is directly proportional to the input voltage and is linear from <0.7V input to maximum input voltage, allowing for an adjustable output voltage. Output is load dependent. Isolation permits <±500V bias on output return and output power is 0.5 watt.

No external components or minimum load are required. Variations include dual output (center-tap), a separate control pin, and an external shield. These component-sized converters operate over a wide temperature range making them ideal for portable, battery-powered equipment requiring minimal size and weight.

Dimensions:

Q01 - Q50:
0.5 x 0.5 x 0.5" (12.7 x 12.7 x 12.7mm)

Q60 - Q80:
0.85 x 0.85 x 0.85" (21.6 x 21.6 x 21.6mm)

Key Applications:

- Avalanche Photo Diodes
- Photo Multiplier Tubes
- Piezo Devices
- Sustaining Ion Pumps
- Electrophoresis
- Igniters
- Capacitor Charging

Input

Characteristic	Minimum	Typical	Maximum	Units	Notes & Conditions
Input Voltage	0.7		5,12,15,24	VDC	See Models and Ratings Table.
Input Current			400	mA	See Models and Ratings Table.
Control Voltage Input (optional)	Analog Control Voltage adjusts output from 0 to 100%, not to exceed Input Voltage, see Application Notes.				

Output

Characteristic	Minimum	Typical	Maximum	Units	Notes & Conditions
Output Voltage			10,000	VDC	See Models and Ratings Table
Output Current			5	mA	See Models and Ratings Table
Output Voltage Tolerance		+10, -10		%	At Max Vout, Full Load, Measured from pin 3 to pin 4
Minimum Load	No minimum load required				
Regulation	Unregulated, Output is proportional to Input. See Application Notes.				
Short Circuit Protection	1			minute	
Ripple and Noise	0.1		1	%	See Models and Ratings Table.

Notes

1. *Maximum output current is available at maximum rated output voltage, and derates linearly as input voltage is decreased.*
2. *Output Voltage is load dependent. Under light or no-load conditions, reduce the Input Voltage so maximum rated Output Voltage is not exceeded.*
3. *Specifications are after 30 minute warm-up, full-load at 25°C, unless otherwise noted.*
4. *Proper thermal management techniques are required to maintain safe case temperature at maximum power output.*
5. *See Application Notes for connection diagrams, page 8.*
6. *All orderable part numbers are listed on pages 3 and 4.*

Environmental

Characteristic	Minimum	Typical	Maximum	Units	Notes & Conditions
Operating Temperature (case)	-25		+70	°C	Q01 to Q20, standard operating temp
Operating Temperature (case)	-55		+75	°C	Q01 to Q20, extended operating temp
Operating Temperature (case)	-25		+60	°C	Q25 to Q50, standard operating temp
Operating Temperature (case)	-55		+70	°C	Q25 to Q50, extended operating temp
Operating Temperature (case)	-10		+60	°C	Q60 to Q101, standard operating temp
Storage Temperature	-55		+105	°C	Q01 to Q50
Storage Temperature	-20		+105	°C	Q60 to Q101
Humidity			95	%RH	Non-condensing
Cooling					Natural Convection

Safety Approvals

Safety Agency	Safety Standard	Notes & Conditions
UL and TUV	IEC/UL/CSA/EN 62368	
CE	CE Directive, RoHs and LVD	Where applicable
RoHS	RoHS 2 and 3 Directive (2011/65/EU)	Where applicable

General

Characteristic	Minimum	Typical	Maximum	Units	Notes & Conditions
Isolation: Input to Output			500	V	< ±500 VDC Bias on Output Return
Leakage Current			250	nA	
Switching Frequency	75		500	kHz	
Construction	Solid vacuum encapsulation, UL 94 V-0 rated.				
Mean Time Between Failure	3			MHrs	Per Bellcore TR 332

Copper Shield Placement

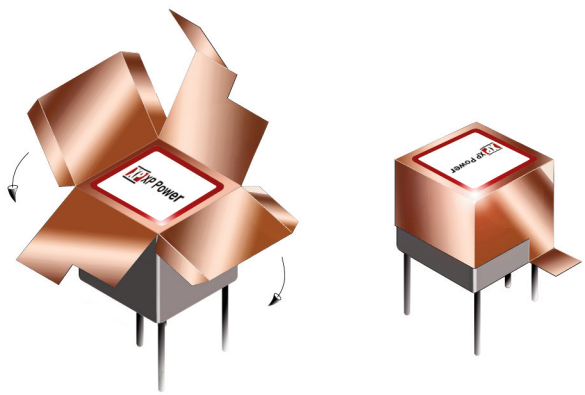
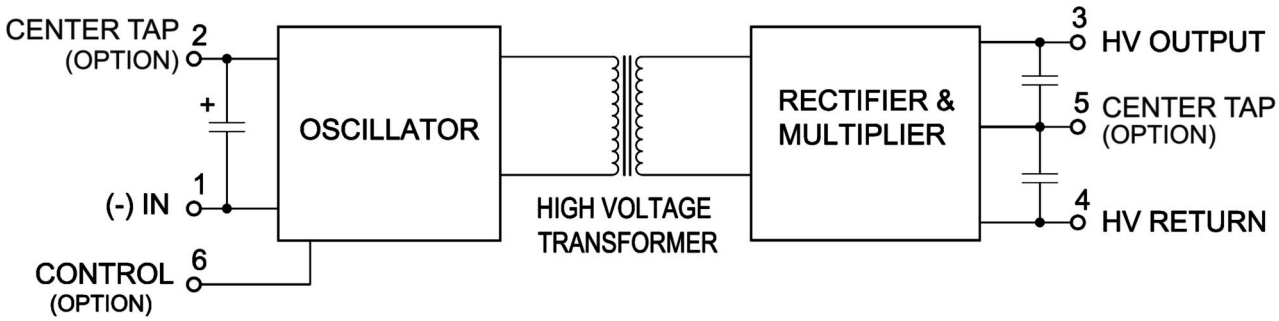
Block Diagram