Models & Ratings

Output Voltage	Output Current(1)	Regulation		Ripple	Frequency	Input Voltage	Model Number
		Load	Line				
0 to -200V	5mA	<0.05%	<0.01%	<0.01%	80-230kHz	12V	CA02N
0 to -200V	5mA	<0.005%	<0.003%	<0.01%	100-250kHz	5V	CA02N-5
0 to +200V	5mA	<0.05%	<0.01%	<0.01%	80-180kHz	12V	CA02P
0 to +200V	5mA	<0.01%	<0.01%	<0.01%	100-250kHz	5V	CA02P-5
0 to -500V	2mA	<0.01%	<0.01%	<0.01%	100-250kHz	12V	CA05N
0 to -500V	2mA	<0.005%	<0.002%	<0.005%	87-350kHz	5V	CA05N-5
0 to +500V	2mA	<0.01%	<0.01%	<0.01%	200-400kHz	12V	CA05P
0 to +500V	2mA	<0.003%	<0.002%	<0.005%	100-250kHz	5V	CA05P-5
0 to -1000V	1mA	<0.005%	<0.001%	<0.001%	100-250kHz	12V	CA10N
0 to -1000V	1mA	<0.005%	<0.001%	<0.001%	100-250kHz	5V	CA10N-5
0 to +1000V	1mA	<0.005%	<0.001%	<0.001%	80-250kHz	12V	CA10P
0 to +1000V	1mA	<0.005%	<0.001%	<0.001%	80-250kHz	12V	CA10PR
0 to +1000V	1mA	<0.005%	<0.001%	<0.001%	100-250kHz	5V	CA10P-5
0 to -1250V	0.8mA	<0.005%	<0.001%	<0.0005%	80-250kHz	12V	CA12N
0 to -1250V	0.8mA	<0.005%	<0.001%	<0.001%	150-300kHz	5V	CA12N-5
0 to +1250V	0.8mA	<0.005%	<0.001%	<0.0005%	80-250kHz	12V	CA12P
0 to +1250V	0.8mA	<0.005%	<0.001%	<0.001%	150-300kHz	5V	CA12P-5
0 to -2000V	0.5mA	<0.01%	<0.01%	<0.001%	100-250kHz	12V	CA20N
0 to -2000V	0.5mA	<0.001%	<0.001%	<0.001%	100-250kHz	5V	CA20N-5
0 to +2000V	0.5mA	<0.01%	<0.01%	<0.001%	80-250kHz	12V	CA20P
0 to +2000V	0.5mA	<0.005%	<0.003%	<0.001%	45-250kHz	5V	CA20P-5

Mechanical Details

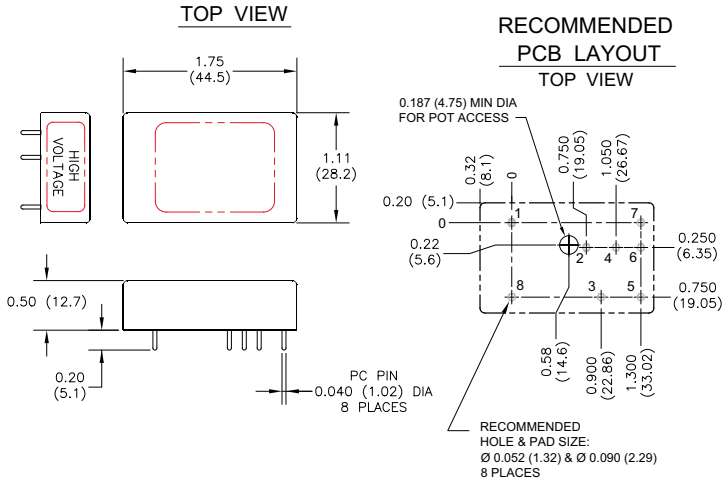

Pin	Function	Description	5Vin	12Vin
1	VOUT	High Voltage Output	Ground to Pin 8	
2	VPGM	Voltage Programming Input, <150uA	0 to +2.048V	0 to +5V
3	SGND	Signal Ground [For VPGM, VIN, VMON]	Low Voltage Ground	
4	VREF	Voltage Reference Output, +/- 1% , 1 mA	+2.048V	+5V
5	CGND	Case Ground	Case Ground	
6	VIN	Input Voltage	+4.75 to +5.25V	+11.5V to +15.5V
7	VMON	Voltage Monitor Output, 1mA, scales to 0 to 100% Vout	0 to +2.048V	0 to +5V
8	HV RTN	HV Output Return	Ground for Pin 1	

Notes

1. All dimensions are in inches (mm)
2. Weight: 1.4oz (39.6g)
3. Tolerance: X.XX±0.02 (0.51)
4. Pin Tolerance: ±0.005 (0.127)
5. All grounds internally connected except case. Case Ground (Pin5) must be connected to ground, with no more than 50V between case ground (Pin 5) and circuit ground (Pin 3).
6. On negative output models, voltage monitor is buffered representation of programming voltage.

Block Diagram

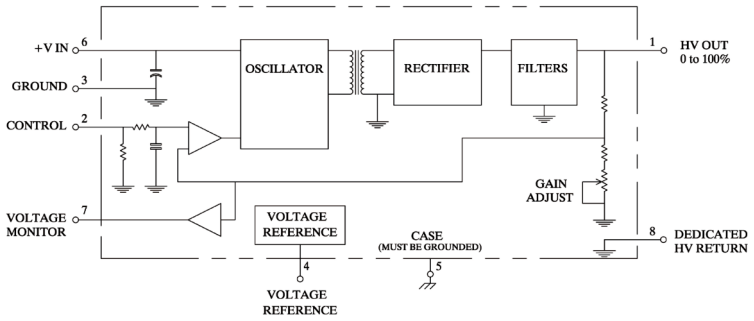

Mounting Kit

CM1: MHV Connector

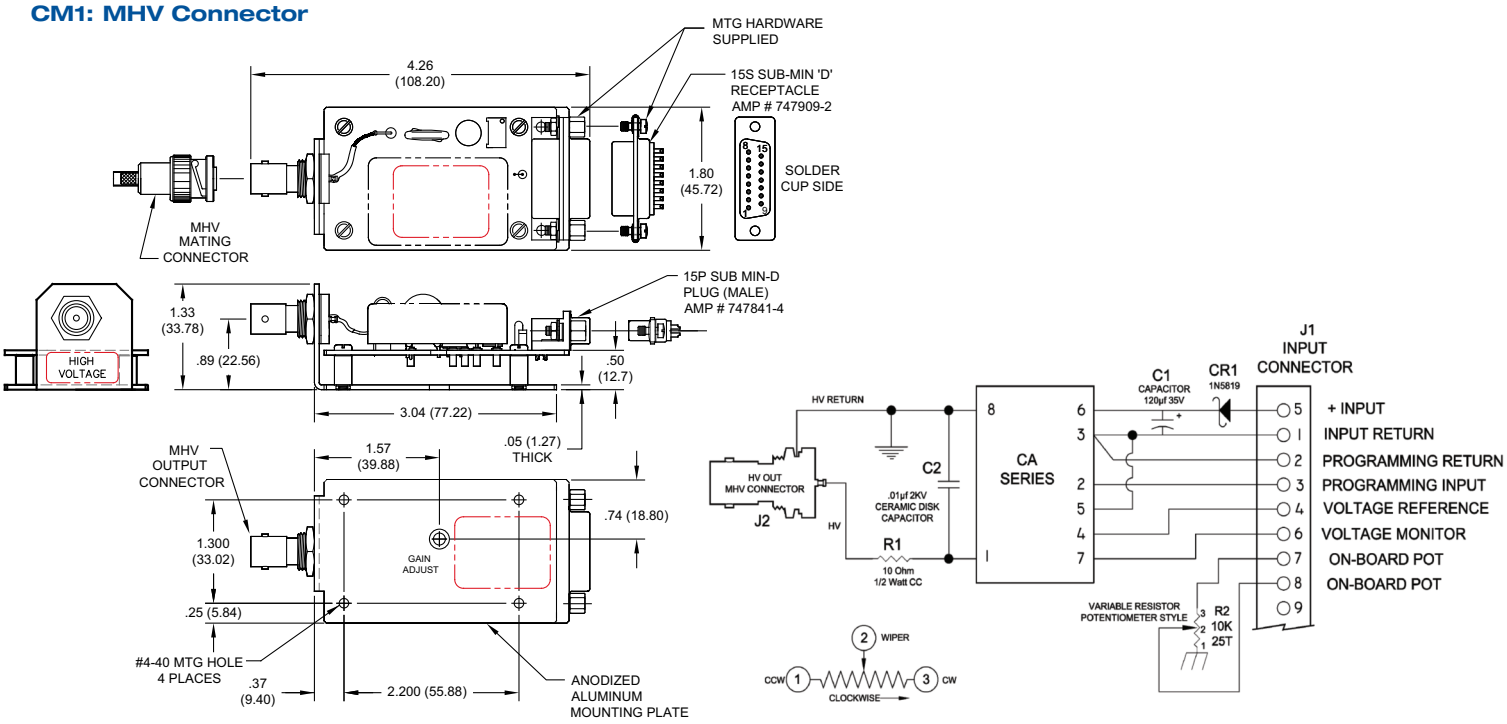

Product Description

These adapters provide convenient prototyping and evaluation during system development and integration. They allow C Series modules to be mounted to a chassis instead of designed into a PC board. Extra filtering on the input and output improves performance. A schottky diode on the input provides reverse polarity protection. Input connector is via a 15P SUB MIN-D plug (mate supplied) and output is via an SHV style coaxial connector (mate supplied).Please note when ordering a CM3 the C Series is not included and must be ordered separately.

Programming Instructions

Onboard Potentiometer: connect pins 7 to 4 and 8 to 3, turn potentiometer to adjust high voltage. Or Remote Potentiometer: connect wiper arm to pin 3, other sides to pins 4 and 2. Or Remote Analog Signal: apply programming voltage to pin 3, return to pin 2.