Altivar 58
Telemecanique

Guide de programmation
Programming Manual
Programmieranleitung
Guía de programación

Terminal d'exploitation
Display Module
Bedienterminal
Terminal de explotación

VW3-A58101

GROUPE SCHNEIDER

■ Merlin Gerin ■ Modicon ■ Square D ■ Telemecanique

FRANÇAIS

ENGLISH

DEUTSCH

ESPAÑOL

Warning

This document relates to use of the Altivar 58 exclusively with :

- the VW3A58101 display module
- a VW3A58201 or VW3A58202 I/O extension card if applicable

Some modes, menus and types of operation can be modified if the speed controller is equipped with other options. Please refer to the relevant documentation for each of these options.

For installation, connection, setup and maintenance instructions, please refer to the Altivar 58 and the I/O extension card User's Manuals as required.

Contents

The VW3A58101 display module is supplied with ATV58●●●●M2 and ATV58●●●●N4 speed controllers.
ATV58●●●●●●Z speed controllers are supplied without a display module. This can be ordered separately.

Installing the display module on the speed controller :

The protective cover should be removed before installing the display module on an ATV58●●●●●●Z speed controller.

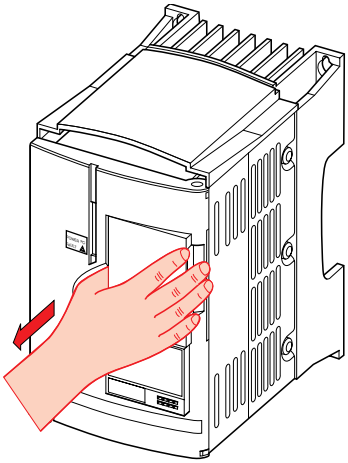

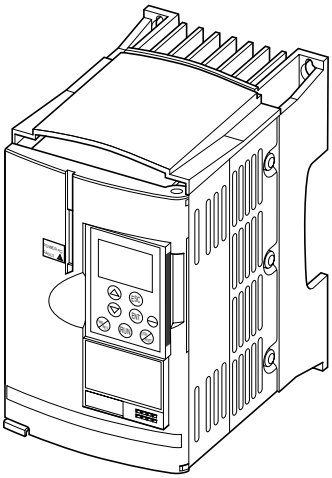

The display module must be connected and disconnected with the power off. If the display module is disconnected when control of the speed controller via the display module is enabled, the speed controller locks in fault mode SLF.

Installing the display module remotely :

Use the kit, reference VW3A58103, comprising 1 cable with connectors, the parts required for mounting on an enclosure door and the installation guide.

Signaling on the front panel of the Altivar

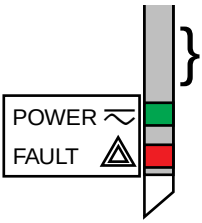

Other LEDs, indicating status with communication option cards

Green LED **POWER** on : Altivar powered up

Red LED **FAULT**
- on : Altivar faulty
- flashing : Altivar locked once the "STOP" key has been pressed on the display module or after a change to the configuration. The motor can then only be supplied with power after resetting prior to the "forward", "reverse", and "injection stop" commands.

ENGLISH

☞ **Before switching the Altivar on and before using the display module :**

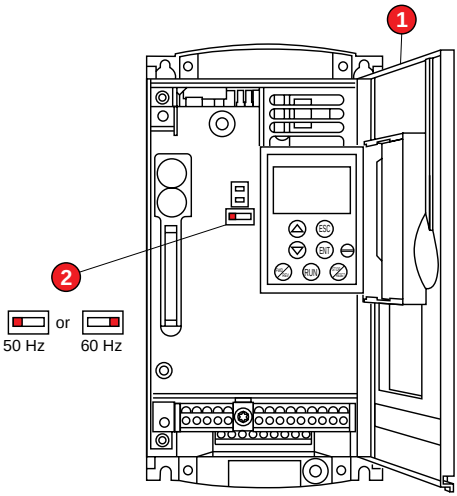

Unlock and open the cover ① of the Altivar on its hinges to access the 50/60 Hz selector switch ② on the control card. If an option card is present, the selector switch can be accessed through it.
Position the selector switch on 50 or 60 Hz, whichever corresponds to your motor.

Preset operating point :

50 Hz position (factory setting) :
- 230 V 50 Hz for ATV-58●●●●M2
- 400 V 50 Hz for ATV-58●●●●N4

60 Hz position :
- 230 V 60 Hz for ATV-58●●●●M2
- 460 V 60 Hz for ATV-58●●●●N4

The display module is used for :

- Displaying the drive identification, electrical values, operating or fault parameters
- Altering the Altivar settings and configuration
- Operating in local control mode via the keypad
- Saving and restoring the configuration in a non-volatile memory in the display module

ENGLISH

Front panel

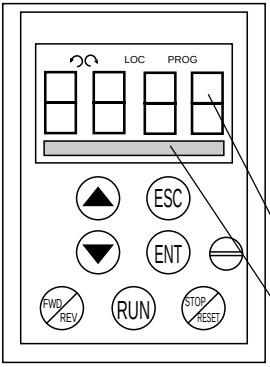

Use of keys and meaning of displays

Flashing :
indicates the selected direction of rotation
Steady :
indicates the direction of motor rotation

LOC Indicates control via the display module

PROG Appears in setup and programming mode
Flashing :
indicates that a value has been modified but not saved

4-character display :
displays numeric values and codes

One line of 16 characters :
displays messages in plain text

Scroll through menus or parameters and set a value

ESC Return to the previous menu or abort the current adjustment and return to the original value

ENT Select a menu, confirm and save a selection or setting

If control via the display module is selected :

FWD/REV Reverse the direction of rotation

RUN Command to start the motor running

STOP/RESET Command to stop the motor or reset the fault. The key's "STOP" function can be inhibited via the program ("CONTROL" menu).

Rear view

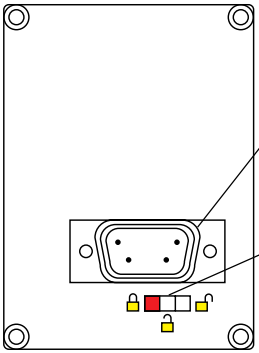

Connector :
- for direct connection of the display module to the speed controller
- for remote operation, the display module can be connected via a cable provided in the VW3A58103 kit.

Access locking switch :
- position : Settings and configuration not accessible
- position : Settings accessible
- position : Settings and configuration accessible

Practical advice :

Before starting your programming, first fill in the configuration and settings record tables (at the end of this document).

Programming the Altivar 58 is made easier by the use of internal sequence selections and interlocks. In order to maximize this ease of use, we recommend that you access the menus in the following order. **Not all steps are essential in every case.**

LANGUAGE
MACRO-CONFIG
CONTROL (for 3-wire control only)
I/O
CONTROL
DRIVE
FAULT
COMMUNICATION or APPLICATION if a card is used
ADJUST

CAUTION : The user must ensure that the programmed functions are compatible with the wiring diagram used. This check is particularly important on the ready-assembled ATV-58E if the factory configuration is modified; the diagram may also require modification.

Minimum setup :

This procedure can be used :

- in simple applications where the speed controller factory settings are suitable
- in installation phases where it is necessary to rotate the motor experimentally before undertaking a full installation

Procedure :

1 - Follow the recommendations in the User's Manual supplied with the speed controller, most importantly setting the **50/60 Hz selector switch** to the nominal frequency of the motor.

2 - Ensure that the factory **macro-configuration** is suitable, otherwise change it in the «**MACRO-CONFIG**» menu.

3 - To ensure the required level of safety, check that the **wiring diagram is compatible** with the macro-configuration, otherwise modify the diagram.

4 - Check in the «**DRIVE**» menu that the factory parameters are compatible with those given on the **motor rating plate**, otherwise modify them.

5 - In the «**DRIVE**» menu, perform an **auto tune**.

6 - If necessary, **adjust the parameters** in the **«ADJUST»** menu (ramps, thermal current, etc).

Level of access / Operating mode

The position of the selector switch offers three levels of access to the menus according to the operating phase of your machine. Access to the menus can also be locked using an access code (see the Files menu).

Position 🔒 **Display :** use during operating phases

- **LANGUAGE** menu : To select the dialog language
- **MACRO-CONFIG** menu : To display the macro-configuration
- **IDENTIFICATION** menu : To display the speed controller voltage and power
- **DISPLAY** menu : To display the electrical values, the operating phase or a fault

Position 🔓 **Display and settings :** use during setup phases

- To perform all the operations which are possible in **level 0**
- **ADJUST** menu : To set all the parameters which can be accessed while the motor is rotating

Position 🔓 **Total unlock :** use during programming phases

- To perform all the operations which are possible in **levels 0 and 1**
- **MACRO-CONFIG** menu : To change the macro-configuration
- **DRIVE** menu : To adjust the performance of the motor-speed controller unit
- **CONTROL** menu : To configure control of the speed controller, for control via the terminals, the display module or the integrated RS485 serial link
- **I/O** menu : To change the I/O assignment
- **FAULT** menu : To configure the motor and speed controller protection and behavior in the event of a fault
- **FILES** menu : To save and restore the speed controller configurations stored in the display module, return to the factory settings or protect your configuration
- **COMMUNICATION** menu, if a communication card is installed : To adjust the parameters of a communication protocol
- **APPLICATION** menu, if a «client application» card is installed. Please refer to the documentation specific to this card.

The number of menus which can be accessed depends on the position of the access locking switch.
Each menu is made up of a number of parameters.

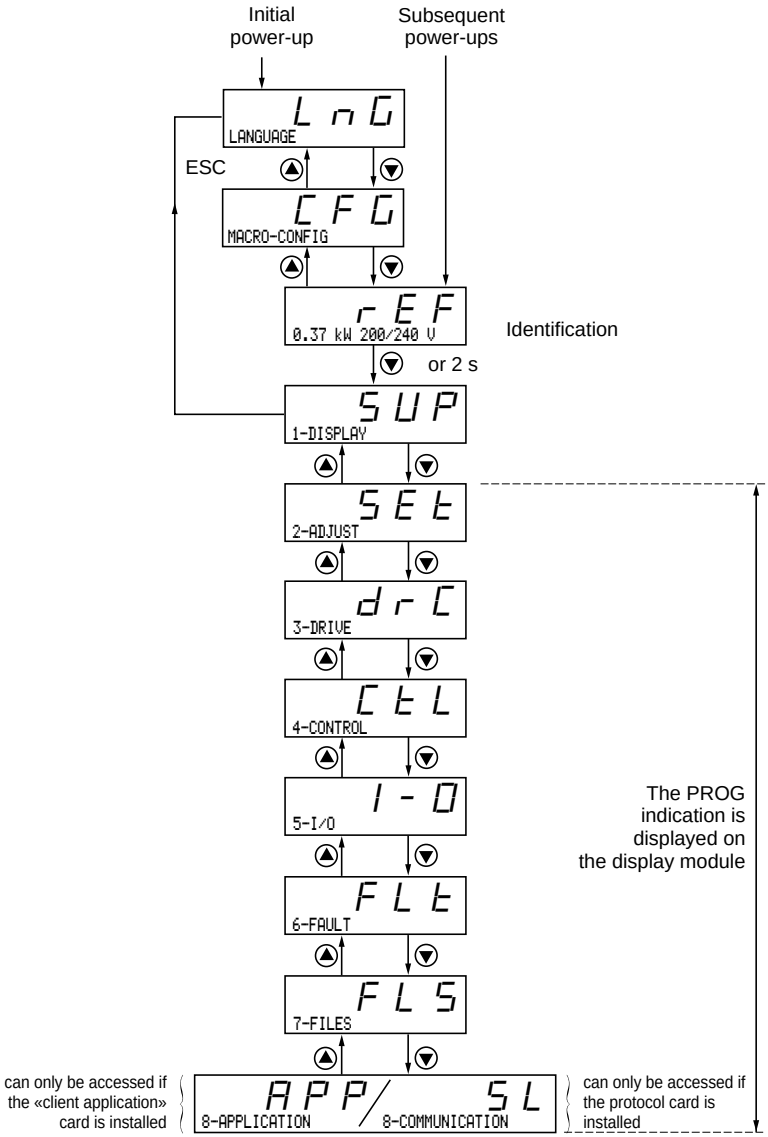

CAUTION : If an access code has already been programmed, it may be impossible to modify some menus, these may not even be visible. In this case, see the section entitled “FILES menu” explaining how to enter the access code.

ENGLISH

Language :

This menu can be accessed whatever position the access switch is in, and can be modified in stop or run mode.

Example :

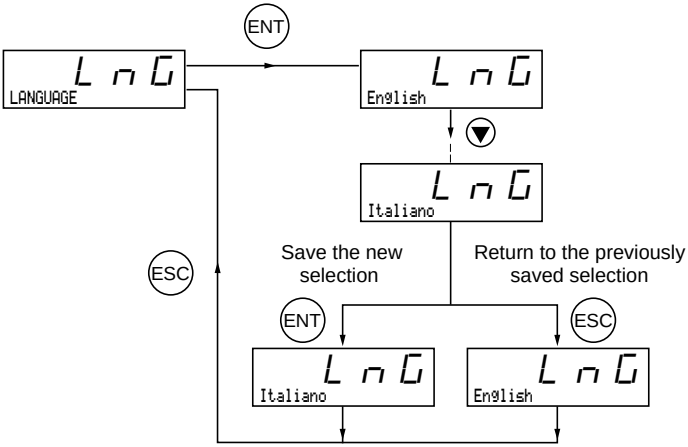

Possible selections : English (factory setting), French, German, Spanish, Italian.

Programming principle :

The principle is always the same, with 1 or 2 levels :

- 1 level : see the “language” example above.
- 2 levels : see the “acceleration ramp” example below.

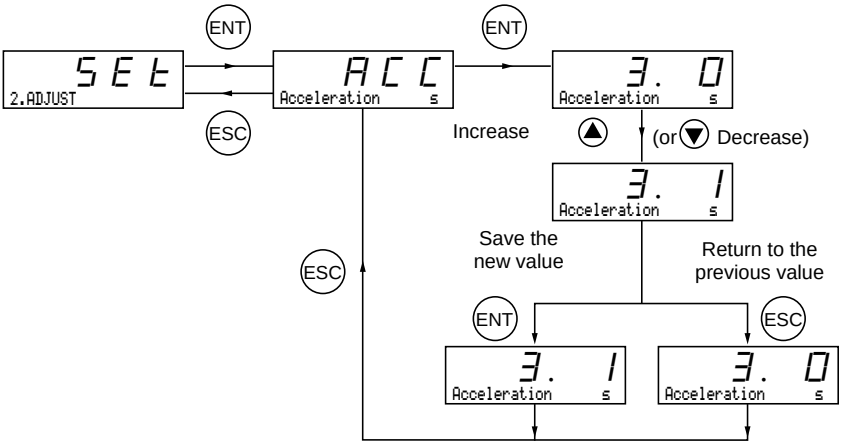

ENGLISH

This parameter can always be displayed but can only be modified in programming mode (access switch in position 🔓) and in stop mode with the speed controller locked.

It can be used to automatically configure an application-specific function. Three application-specific functions are available.

- Handling (Hdg)
- Variable torque for pump and fan applications (VT)
- General use (GEn)

A macro-configuration automatically assigns the I/O and parameters, activating the functions required for the application. The parameters related to the programmed functions are available.

Factory setting : Handling

Speed controller :

I/O assignment according to the macro-configuration			
	Hdg : Handling	GEn : Gen Use.	VT : Var. Torque
Logic input LI1	forward	forward	forward
Logic input LI2	reverse	reverse	reverse
Logic input LI3	2 preset speeds	jog operation	reference switching
Logic input LI4	4 preset speeds	freewheel stop	injection braking
Analog input AI1	summing ref.	summing ref.	speed ref. 1
Analog input AI2	summing ref.	summing ref.	speed ref. 2
Relay R1	controller fault	controller fault	controller fault
Relay R2	downstr. contactor ctrl	mot. therm. state reached	freq. setpoint reached

Extension cards :

I/O assignment according to the macro-configuration			
	Hdg : Handling	GEn : Gen Use.	VT : Var. Torque
Logic input LI5	8 preset speeds	clear fault	freewheel stop
Logic input LI6	clear fault	limit torque	ramp switching
Analog input AI3 or Inputs A, A+, B, B+	summing ref.	summing ref.	PI regulator feedback
	speed feedback	speed feedback	speed feedback
Logic output LO	current thresh reached	downstr. contactor ctrl	high speed reached
Analog output AO	motor frequency	motor frequency	motor frequency

CAUTION : Ensure that the programmed macro-configuration is compatible with the wiring diagram used. This check is particularly important on the ready-assembled ATV-58E if the factory configuration is modified; the diagram may also require modification.

ENGLISH

Modification of the macro-configuration requires double confirmation as it results in automatic assignment of functions. The following screen is displayed :

ENT to confirm the modification
ESC to return to the previous configuration

Customizing the configuration :

The configuration of the speed controller can be customized by changing the I/O assignment in the I/O menu which can be accessed in programming mode (access switch in position 🔓).
This modification modifies the displayed macro-configuration value :

is displayed.

ENGLISH

Drive identification

This parameter can always be displayed. It indicates the speed controller power and voltage as indicated on the identification label.

```
      rEF
0.37 kW 200/240 V
```

Display menu (selection of parameters displayed during operation)

The following parameters can be accessed whatever position the access switch is in, in stop or run mode.

Label	Code	Function	Unit
Var. State	--- rdY rUn ACC dEC CLI dCb nSt Obr	State of the speed controller : indicates a fault or the motor operating phase : rdY = speed controller ready, rUn = motor in steady state or run command present and zero reference, ACC = accelerating, dEC = decelerating, CLI = current limit, dCb = injection braking, nSt = freewheel stop control, Obr = braking by adapting the deceleration ramp (see the “drive” menu).	-
Freq. Ref.	FrH	Frequency reference	Hz
Output Freq.	rFr	Output frequency applied to the motor	Hz
Motor Speed	SPd	Motor speed estimated by the speed controller	rpm
MotorCurrent	LCr	Motor current	A
MainsVoltage	ULn	Line voltage	V
MotorThermal	tHr	Thermal state : 100% corresponds to the nominal thermal state of the motor. Above 118%, the speed controller triggers an OLF fault (motor overload)	%
DriveThermal	tHd	Thermal state of the speed controller : 100% corresponds to the nominal thermal state of the speed controller. Above 118%, the speed controller triggers an OHF fault (speed controller overheating). It can be reset below 70 %.	%
Last Fault	LFt	Displays the last fault which occurred.	-
Freq. Ref.	LFr	This adjustment parameter appears instead of the FrH parameter when speed controller control via the display module is activated : LCC parameter in the control menu.	Hz

ENGLISH

This menu can be accessed when the switch is in positions 🔒 and 🔓. Adjustment parameters can be modified in stop mode OR during operation. **Ensure that any changes made during operation are not dangerous; changes should preferably be made in stop mode.**

The list of adjustment parameters is made up of a fixed and a changeable part which varies according to :
- the selected macro-configuration
- the presence of an I/O extension card
- the reassignment of I/O

The following parameters can always be accessed (fixed part).

Label	Code	Description	Adjustment range	Factory setting
Freq. Ref. - Hz	LFr	Appears when control via the display module is activated : LCC parameter in the control menu	LSP to HSP	
Acceleration - s Deceleration - s	ACC dEC	Acceleration and deceleration ramp times Defined to go from 0 to 50/60 Hz	0.05 to 999.9 0.05 to 999.9	3 s 3 s
Accelerate 2 - s Decelerate 2 - s	AC2 dE2	2nd time for the acceleration ramp 2nd time for the deceleration ramp These parameters can be accessed if the ramp switching threshold (parameter Frt) is other than 0 Hz or if a logic input is assigned to ramp switching.	0.05 to 999.9 0.05 to 999.9	5 s 5 s
Low Speed - Hz	LSP	Low speed	0 to HSP	0 Hz
High Speed - Hz	HSP	High speed : ensure that this setting is correct for the motor and the application.	LSP to tFr	50 / 60 Hz acc. to the switch
Gain - %	FLG	Frequency loop gain : used to adapt the rapidity of the machine speed transients according to the dynamics. For high resistive torque, high inertia or fast cycle machines, increase the gain gradually.	0 to 100	20
Stability - %	StA	Used to adapt the return to steady state after a speed transient according to the dynamics of the machine. Gradually increase the stability to avoid any speed excess.	0 to 100	20
ThermCurrent - A	ItH	Current used for motor thermal protection. Set ItH to the nominal current on the motor rating plate.	0.45 to 1.05 In (1)	0.9 In (1)
DC Inj.Curr. - A	IdC	Level of the braking current with DC injection (2) This parameter can be accessed if a logic input is assigned to DC injection stopping.	0.25 to 1.5 ItH	0.7 ItH
DC Inj. Time- s	tdC	DC injection braking time. If tdC=Cont, Permanent DC injection on stopping (2)	0 to 30 s Cont	0.5 s

(1) In corresponds to the speed controller nominal current indicated in the catalog and on the speed controller identification label.
(2) After 30 seconds IdC is automatically limited to 0.5 ItH if it is set to a higher value.

ENGLISH

Label	Code	Description	Adjustment range	Factory setting
Jump Freq. - Hz	JPF	Skip frequency : prohibits prolonged operation over a frequency range of +/-2.5 Hz around JPF. This function can be used to prevent a critical speed which causes resonance.	0 to HSP	0 Hz
LSP Time - s	tLS	Operating time at low speed. After operating at LSP for a given time, the motor is stopped automatically. The motor restarts if the frequency reference is greater than LSP and if a run command is still present.	no- 0.1 to 999.9	no (no time limit)

The following parameters can be accessed in the **'handling' macro-configuration**

Label	Code	Description	Adjustment range	Factory setting
IR Compens. - %	UFr	Used to adjust the default value or the value measured during auto-tuning. The adjustment range is extended to 800% if the SPC parameter (special motor) is set to "Yes" in the drive menu.	0 to 150% or 0 to 800%	100%
Slip Comp. - %	SLP	Used to adjust the slip compensation value fixed by the motor nominal speed.	0 to 150%	100%
Preset Sp.2- Hz	SP2	2nd preset speed	LSP to HSP	10 Hz
Preset Sp.3- Hz	SP3	3rd preset speed	LSP to HSP	15 Hz
Preset Sp.4- Hz	SP4	4th preset speed	LSP to HSP	20 Hz
Preset Sp.5- Hz	SP5	5th preset speed	LSP to HSP	25 Hz
Preset Sp.6- Hz	SP6	6th preset speed	LSP to HSP	30 Hz
Preset Sp.7- Hz	SP7	7th preset speed	LSP to HSP	35 Hz
BrReleaseLev- Hz	brL	Brake release frequency	0 to 10 Hz	0 Hz
BrRelease I- A	Ibr	Brake release current	0 to 1.5 ItH	0 A
BrReleasTime- s	brt	Brake release time	0 to 5 s	0 s
BrEngage Lev- Hz	bEn	Brake engage frequency	0 to LSP	0 Hz
BrEngageTime- s	bEt	Brake engage time	0 to 5 s	0 s
Tacho Coeff.	dtS	Multiplication coefficient of the feedback associated with tachogenerator function : $dtS = \frac{9}{\text{tacho voltage at HSP}}$	1 to 2	1
Curr.Lev.Att- A	Ctd	Current threshold above which the logic output or the relay changes to 1	0.25 to 1.36 In (1)	1.36 In (1)

(1) In corresponds to the speed controller nominal current indicated in the catalog and on the speed controller identification label.

Parameters in gray boxes appear if an I/O extension card is installed.

ENGLISH

The following parameters can be accessed in the **‘general use’ macro-configuration**

Label	Code	Description	Adjustment range	Factory setting
IR Compens. - %	UFr	Used to adjust the default value or the measured value during auto-tuning. The adjustment range is extended to 800% if the SPC parameter (special motor) is set to “Yes” in the drive menu.	0 to 150% or 0 to 800%	100%
Slip Comp. - %	SLP	Used to adjust the slip compensation value fixed by the motor nominal speed.	0 to 150%	100%
Jog Freq. - Hz	JOG	Jog frequency	0 to 10 Hz	10 Hz
JOG Delay - s	JGt	Anti-repeat delay between two consecutive jog operations	0 to 2 s	0.5 s
ThermLev.Att- %	ttd	Motor thermal state threshold above which the logic output or the relay changes to 1	0 to 118%	100%
Trq.Limit 2- %	tL2	Second torque limit level activated by a logic input	0 to 200% (1)	200%
Tacho Coeff.	dtS	Multiplication coefficient of the feedback associated with tachogenerator function : dtS = $\frac{9}{\text{tacho voltage at HSP}}$	1 to 2	1

The following parameters can be accessed in the **‘variable torque’ macro-configuration**

Label	Code	Description	Adjustment range	Factory setting
V/f Profile - %	PFL	Used to adjust the quadratic power supply ratio when the energy saving function has been inhibited	0 to 100%	20%
PI Prop.Gain	rPG	Proportional gain of the PI regulator	0.01 to 100	1
PI Int.Gain - /s	rIG	Integral gain of the PI regulator	0.01 to 100 / s	1 / s
PI Coeff.	FbS	PI feedback multiplication coefficient	1 to 100	1

(1) 100% corresponds to the nominal torque of a motor with a power rating equal to that associated with the speed controller.

Parameters in gray boxes appear if an I/O extension card is installed.

The following parameters can be accessed once the I/O have been reassigned on the basic product.

Label	Code	Description	Adjustment range	Factory setting
Preset Sp.2 - Hz	SP2	2nd preset speed	LSP to HSP	10 Hz
Preset Sp.3 - Hz	SP3	3rd preset speed	LSP to HSP	15 Hz
Preset Sp.4 - Hz	SP4	4th preset speed	LSP to HSP	20 Hz
Preset Sp.5 - Hz	SP5	5th preset speed	LSP to HSP	25 Hz
Preset Sp.6 - Hz	SP6	6th preset speed	LSP to HSP	30 Hz
Preset Sp.7 - Hz	SP7	7th preset speed	LSP to HSP	35 Hz
Jog Freq. - Hz	JOG	Jog frequency	0 to 10 Hz	10 Hz
JOG Delay - s	JGt	Anti-BrkLgSeqFlwd delay between two consecutive jog operations	0 to 2 s	0.5 s
BrReleaseLev- Hz	brL	Brake release frequency	0 to 10 Hz	0 Hz
BrRelease I - A	Ibr	Brake release current	0 to 1.5 ItH	0 A
BrReleasTime- s	brt	Brake release time	0 to 5 s	0 s
BrEngage Lev- Hz	bEn	Brake engage frequency	0 to LSP	0 Hz
BrEngageTime- Hz	bEt	Brake engage time	0 to 5 s	0 s
PI Prop.Gain	rPG	Proportional gain of the PI regulator	0.01 to 100	1
PI Int.Gain	rIG	Integral gain of the PI regulator	0.01 to 100/s	1 / s
PI Coeff.	FbS	PI feedback multiplication coefficient	1 to 100	1
Freq.Lev.Att- Hz	Ftd	Motor frequency threshold above which the logic output changes to 1	LSP to HSP	50/60 Hz
Curr.Lev.Att- A	Ctd	Current threshold above which the logic output or the relay changes to 1	0.25 to 1.36 In (1)	1.36 In (1)
ThermLev.Att- %	ttd	Motor thermal state threshold above which the logic output or the relay changes to 1	0 to 118%	100%
Trq.Limit 2 - %	tL2	Second torque limit level activated by a logic input	0 to 200% (2)	200%
Tacho Coeff.	dtS	Multiplication coefficient of the feedback associated with tachogenerator function : $dtS = \frac{9}{\text{tacho voltage at HSP}}$	1 to 2	1

(1) In corresponds to the speed controller nominal current indicated in the catalog and on the speed controller identification label.

(2) 100% corresponds to the nominal torque of a motor with a power rating equal to that associated with the speed controller.

Parameters in gray boxes appear if an I/O extension card is installed.

ENGLISH

This menu can be accessed when the switch is in position 🔓.
The parameters can only be modified in stop mode with the speed controller locked.

Drive performance can be optimized by :

- entering the values given on the rating plate in the drive menu
- performing an auto-tune operation (on a standard asynchronous motor)

When using special motors (motors connected in parallel, tapered rotor brake motors, synchronous or synchronized asynchronous motors, rheostatic rotor asynchronous motors) :

- Select the “Hdg : Handling” or the “GEn : General Use” macro-configuration.
- Set the “SPC” Special motor parameter to “Yes” in the drive menu.
- Adjust the “UFr” IR compensation parameter in the adjust menu to obtain satisfactory operation.

Label	Code	Description	Adjustment range	Factory setting
Nom.Mot.Volt - V	UnS	Nominal motor voltage given on the rating plate The adjustment range depends on the speed controller model : ATV58••••M2 ATV58••••N4	200 to 240V 380 to 500 V	230 V 400/460V according to position of 50/60Hz switch
Nom.Mot.Freq- Hz	FrS	Nominal motor frequency given on the rating plate	40 to tFr	50/60Hz according to position of 50/60Hz switch
Nom.Mot.Curr - A	nCr	Nominal motor current given on the rating plate	0.25 to 1.36 In (1)	0.9 In (1)
Nom.MotSPeed-rPm	nSP	Nominal motor speed given on the rating plate	0 to 9999 rpm	acc. to controller rating
Mot. Cos Phi	COS	Motor Cos Phi given on the rating plate	0.5 to 1	acc. to controller rating
Auto Tuning	tUn	Used to auto-tune motor control once this parameter has been set to “Yes”. Once auto-tuning is complete, the parameter automatically returns to “Done”, or to “No” in the event of a fault.	No - Yes	No
Max. Freq. - Hz	tFr	Maximum output frequency. **The maximum value is a function of the switching frequency**	40 to 500 Hz	60/72Hz according to position of 50/60Hz switch

(1) In corresponds to the speed controller nominal current indicated in the catalog and on the speed controller identification label.

Label	Code	Description	Adjustment range	Factory setting
Energy Eco	nLd	Optimizes motor efficiency. **Can only be accessed in the variable torque macro-configuration.**	No-Yes	Yes
DecRampAdapt	brA	Activation of this function is used to increase the deceleration time automatically if this has been set to too low a value for the inertia of the load, thus avoiding an ObF fault. This function may be incompatible with positioning on a ramp and with the use of a braking resistor. The factory setting depends on the macro-configuration used : No for handling, Yes for variable torque and general use. If relay R2 is assigned to the brake sequence function, the parameter brA remains locked on No.	No-Yes	No
SwitchRamp2- Hz	Frt	Ramp switching frequency. Once the output frequency exceeds Frt, the ramp times taken into account are AC2 and dE2.	0 to HSP	0 Hz
Ramp Type	rPt	Defines the shape of the acceleration and deceleration ramps. LIN : linear S : S-shape ramp 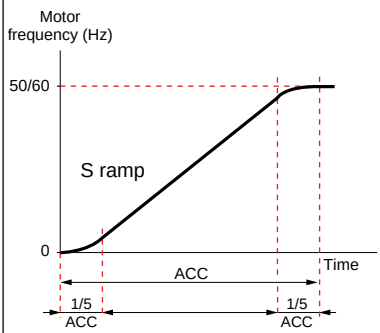 	LIN - S	LIN
DecRAmpCoeff	dCF	Deceleration ramp time reduction coefficient when the fast stop function is active.	1 to 10	4
Trq.Limit _ %	tLI	The torque limit is used to limit the maximum motor torque.	0 to 200% (1)	200%
Int. I Lim - A	CLI	The current limit is used to limit motor overheating.	0.25 to 1.36 In (2)	1.36 In
Auto DC Inj.	AdC	Used to deactivate automatic DC injection braking on stopping.	No-Yes	Yes

(1) 100% corresponds to the nominal torque of a motor with a power rating equal to that associated with the speed controller.

(2) In corresponds to the speed controller nominal current indicated in the catalog and on the speed controller identification label.

ENGLISH

Label	Code	Description	Adjustment range	Factory setting
Motor P Coef	PCC	Defines the relationship between the speed controller nominal power and a less powerful motor when a logic input has been assigned to the motor switching function.	0.2 to 1	1
Sw Freq. Type	SFt	Used to select a low switching frequency (LF) or a high switching frequency (HF1 or HF2). HF1 switching is designed for applications with a low load factor without derating the speed controller. If the thermal state of the speed controller exceeds 95 %, the frequency automatically changes to 4 kHz . When the thermal state of the speed controller drops back to 70 %, the selected switching frequency is re-established. HF2 switching is designed for applications with a high load factor with derating of the speed controller by one rating : the drive parameters are scaled automatically (torque limit, thermal current, etc).	LF-HF1-HF2	LF
Sw Freq. - kHz	SFr	Used to select the switching frequency. The adjustment range depends on the SFt parameter. If SFt = LF If SFt = HF1 or HF2 The maximum operating frequency (tFr) is limited according to the switching frequency. SFr(kHz) 0.5 1 2 4 8 12 16 tFr (Hz) 62 125 250 500 500 500 500	0.5-1-2-4kHz 8-12-16kHz	4 kHz 16 kHz
Noise Reduct	nrd	This function modulates the switching frequency randomly to reduce motor noise.	No-Yes	Yes (1) No (2)
Special motor	SPC	This function extends the adjustment range for the UFr parameter in the adjust menu for adaptation to the special motors mentioned at the start of this section. Can only be accessed in the "Handling" and "General use" macro-configurations.	No-Yes	No
PG Type	PGt	Defines the type of sensor used when an encoder feedback I/O card is installed : INC : incremental encoder (A, A+, B, B+ are hard-wired) DET : detector (only A is hard-wired)	INC-DET	DET
Num. Pulses	PLS	Defines the number of pulses for each revolution of the sensor.	1 to 1024	1

(1) if SFt = LF, (2) if SFt = HF1 or HF2

Parameters in gray boxes appear if an I/O extension card is installed.

This menu can be accessed when the switch is in position 🔓. The parameters can only be modified in stop mode with the speed controller locked.

Label	Code	Description	Adjustment range	Factory setting
TermStripCon	tCC	Configuration of terminal control : 2-wire or 3-wire control.	2W- 3W 2-wire / 3-wire	2W

⚠ Modification of this parameter requires double confirmation as it results in reassignment of the logic inputs.
By changing from 2-wire control to 3-wire control, the logic input assignments are shifted by one input. The LI3 assignment in 2-wire control becomes the LI4 assignment in 3-wire control.
In 3-wire control, inputs LI1 and LI2 cannot be reassigned.

I/O	Handling	General use	Variable torque
LI1	STOP	STOP	STOP
LI2	RUN forward	RUN forward	RUN forward
LI3	RUN reverse	RUN reverse	RUN reverse
LI4	2 preset speeds	jog operation	ref. switching
LI5	4 preset speeds	freewheel stop	injection braking
LI6	8 preset speeds	clear faults	freewheel stop

The I/O with a gray background can be accessed if an I/O extension card has been installed.

3-wire control (pulse control : one pulse is sufficient to control start-up). This option inhibits the "automatic restart" function.

Wiring example :

LI1 : stop
LI2 : forward
LIx : reverse

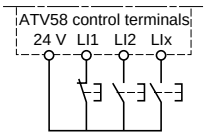

This option only appears if 2-wire control is configured.

Label	Code	Description	Adjustment range	Factory setting
Type 2 Wire	tCt	Defines 2-wire control :	LEL-TRN-PFo	LEL

- according to the state of the logic inputs (LEL : 2-wire)
- according to a change in state of the logic inputs (TRN : 2-wire trans.)
- according to the state of the logic inputs with forward always having priority over reverse (PFo : Priorit. FW)

Wiring example :

LI1 : forward
LIx : reverse

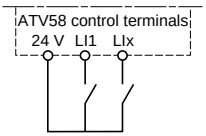

ENGLISH

Label	Code	Description	Adjustment range	Factory setting
AI2 min Ref.- mA AI2 Max. Ref- mA	CrL CrH	Minimum value of the signal on input AI2 Maximum value of the signal on input AI2 These two parameters are used to define the signal sent to AI2. There are several configuration possibilities, one of which is to configure the input for a 0-20 mA, 4-20 mA, 20-4mA, etc signal. 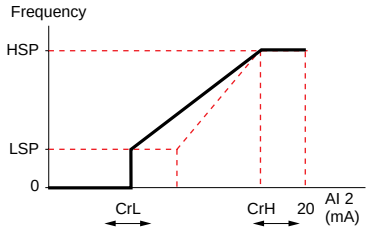 	0 to 20 mA 4 to 20 mA	4 mA 20 mA
Save Ref.	Str	Associated with the +/- speed function, this function is used to save the reference : when the run commands disappear (save in RAM) or when the line supply disappears (save in EEPROM) On the next start-up, the speed reference is the last reference saved.	NO-RAM-EEP	NO
KeyPad Comm.	LCC	Used to activate speed controller control via the display module. The STOP/RESET, RUN and FW/RV keys are active. The speed reference is given by the parameter LFr. Only the freewheel stop, fast stop and injection stop commands remain active at the terminals. If the speed controller/ display module connection is cut, the speed controller locks in an SLF fault.	No-Yes	No
STOP Priorit	PSt	This function gives priority to the STOP key irrespective of the control channel (terminals or fieldbus). To set the PSt parameter to "No" : 1 - Display "No". 2 - Press the "ENT" key. 3 - The speed controller displays "See manual" 4 - Press ▲ then ▼ then "ENT". For applications with continuous processes, it is advisable to configure the key as inactive (set to "No").	No-Yes	Yes
DriveAddress	Add	Address of the speed controller when it is controlled via the display module port (with the display module and programming terminal removed)	0 to 31	0

ENGLISH

This menu can be accessed when the switch is in position 🔓 .
The assignments can only be modified in stop mode with the speed controller locked.

Label	Code	Function
LI2 Assign.	L I2	
	See the summary table and description of the functions	

The inputs and outputs offered in the menu depend on the I/O cards installed (if any) in the speed controller, as well as the selections made previously in the control menu.
The “factory” configurations are preassigned by the selected macro-configuration.

Summary table of the configurable input assignments (exc. 2-wire / 3-wire option)

I/O extension option cards			2 logic inputs LI5-LI6	Analog input AI3
Speed controller without option		Analog input AI2	3 logic inputs LI2 to LI4	
NO:Not assigned	(Not assigned)	X	X	X
RV :Reverse	(Run reverse)		X	
RP2:Switch ramp2	(Ramp switching)		X	
JOG	(Jog operation)		X	
+SP: + Speed	(+ speed)		X	
-SP: - Speed	(- speed)		X	
PS2: 2 preset SP	(2 preset speeds)		X	
PS4: 4 preset SP	(4 preset speeds)		X	
PS8: 8 preset SP	(8 preset speeds)		X	
NST:Freewhl Stop	(Freewheel stop)		X	
DCI:DC inject.	(Injection stop)		X	
FST:Fast stop	(Fast stop)		X	
CHP:Multi. Motor	(Motor switching)		X	
TL2:Trq.Limit 2	(Second torque limit)		X	
FLO:Forced Local	(Forced local mode)		X	
RST:Fault Reset	(Clearing faults)		X	
RFC:Auto/manu	(Reference switching)		X	
FR2:Speed Ref2	(Speed reference 2)	X		
SAI:Summed Ref.	(Summing reference)	X		X
PIF:PI regulator	(PI regulator feedback)	X		X
SFB:Tacho feedbk	(Tachogenerator)			X
PTC:Therm.Sensor	(PTC probes)			X

CAUTION : If relay R2 is assigned to the "brake sequence" function, AI3 is automatically assigned in the factory setting to Tacho Feedback, if the card is present. However, it is still possible to reassign AI3.

ENGLISH

Summary table for configurable outputs

I/O extension option card			Logic output LO	Analog output AO
Speed controller without option		Relay R2		
NO:Not assigned	(Not assigned)	X	X	X
RUN:DriveRunning	(Speed controller running)	X	X	
OCC:OutputCont.	(Downstream contactor control)	X	X	
FTA:Freq Attain.	(Threshold freq. reached)	X	X	
FLA:HSP Attained	(HSP reached)	X	X	
CTA:I Attained	(Current threshold reached)	X	X	
SRA:FRH Attained	(Frequency reference reached)	X	X	
TSA:MtrTherm Lvl	(Thermal threshold reached)	X	X	
BLC:Brk Logic	(Brake sequence)	X		
OCR:Motor Curr.	(Motor current)			X
OFR:Motor Freq.	(Motor speed)			X
ORP:Output Ramp	(Ramp output)			X
TRQ:Motor Torque	(Motor torque)			X

Once the I/O have been reassigned, the parameters related to the function automatically appear in the menus, and the macro-configuration indicates “CUS : Customize”.

Some reassignments result in new adjustment parameters which the user must not forget to set in the adjust menu :

I/O		Assignments	Parameters to set
LI	RP2	Ramp switching	AC2 dE2
LI	JOG	Jog operation	JOG JGt
LI	PS4	4 preset speeds	SP2 - SP3
LI	PS8	8 preset speeds	SP4 - SP5 - SP6 - SP7
LI	DCI	Injection stop	IdC
LI	TL2	Second torque limit	tL2
AI	PIR	PI regulator	rPG - rIG - FbS
AI	SFB	Tachogenerator	dtS
R2	BLC	Brake sequence	brL - Ibr - brt - bEn - bEt
LO/R2	FTA	Frequency threshold reached	Ftd
LO/R2	CTA	Current threshold reached	Ctd
LO/R2	TSA	Thermal threshold reached	ttd

Some reassignments result in new adjustment parameters being added which the user must configure in the control, drive or fault menu :

I/O		Assignments	Parameters to set
LI	-SP	- speed	Str (control menu)
LI	FST	Fast stop	dCF (drive menu)
LI	CHP	Motor switching	PCC (drive menu)
LI	RST	Clearing faults	rSt (fault menu)
AI	SFB	Tachogenerator	Sdd (fault menu)

CAUTION : If relay R2 is assigned to the "brake sequence" function, AI3 is automatically assigned in the factory setting to Tacho Feedback, if the card is present. However, it is still possible to reassign AI3.

ENGLISH

Function compatibility table

The choice of application functions may be limited by the incompatibility between certain functions. Functions which are not listed in this table are fully compatible.

	DC injection braking	Summing inputs	PI regulator	+ / - speed	Reference switching	Freewheel stop	Fast stop	Jog operation	Preset speeds	Speed regulation with tachogenerator or encoder
DC injection braking						↑				
Summing inputs					●					
PI regulator								●	●	●
+ / - speed					●			↑	●	
Reference switching		●		●					●	
Freewheel stop	←						←			
Fast stop						↑				
Jog operation			●	←					←	
Preset speeds			●	●	●			↑		
Speed regulation with tachogenerator or encoder			●							

●	Incompatible functions
	Compatible functions
	Not applicable

Priority functions (functions which cannot be active simultaneously) :

←	↑	The function indicated by the arrow has priority over the other.

Stop functions have priority over run commands.
Speed references via logic command have priority over analog setpoints.

ENGLISH

Logic input application functions

Operating direction : forward / reverse

Reverse operation can be disabled for applications requiring only a single direction of motor rotation.

2-wire control :

Run and stop are controlled by the same logic input, for which state 1 (run) or 0 (stop), or a change in state is taken into account (see the 2-wire control menu).

3-wire control :

Run and stop are controlled by 2 different logic inputs. LI1 is always assigned to the stop function. A stop is obtained on opening (state 0).

The pulse on the run input is stored until the stop input opens.

During power-up or manual or automatic fault resetting, the motor can only be supplied with power after a reset prior to the “forward”, “reverse”, and “injection stop” commands.

Ramp switching : 1st ramp : ACC, DEC ; 2nd ramp : AC2, DE2

Two types of activation are possible :
- activation of logic input LIx
- detection of an adjustable frequency threshold

If a logic input is assigned to the function, ramp switching can only be performed by this input.

Step by step operation (“JOG”) : Low speed operation pulse

If the JOG contact is closed and then the operating direction contact is actuated, the ramp is 0.1 s irrespective of the ACC, dEC, AC2, dE2 settings. If the direction contact is closed and the JOG contact is then actuated, the configured ramps are used.

Parameters which can be accessed in the adjust menu :
- JOG speed
- anti-repeat delay (minimum time between 2 “JOG” commands).

+ / - speed : 2 types of operation are available

1 - Use of single action buttons : two logic inputs are required in addition to the operating direction(s). The input assigned to the “+ speed” command increases the speed, the input assigned to the “- speed” command decreases the speed.

This function accesses the Str save reference parameter in the Control menu.

2- Use of double action buttons : only one logic input assigned to + speed is required.
+ / - speed with double action buttons :
Description : 1 button pressed twice for each direction of rotation.
Each action closes a volt-free contact.

	Release (- speed)	Press 1 (speed maintained)	Press 2 (+ speed)
forward button	–	a	a and b
reverse button	–	c	c and d

Wiring example :

LI1 : forward
LIx : reverse
LIy : + speed

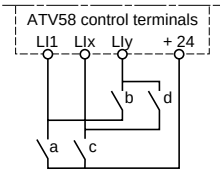

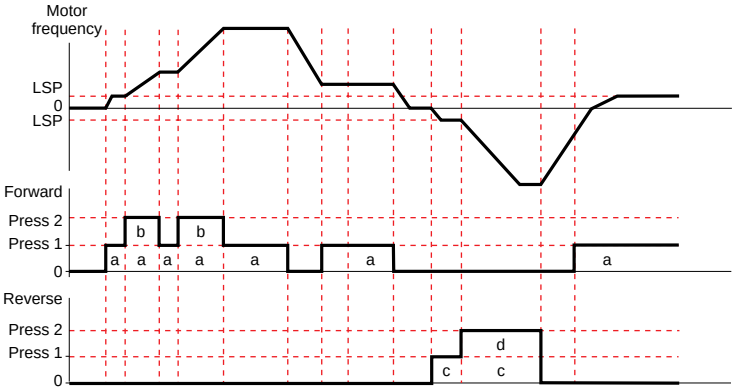

This type of +/- speed is incompatible with 3-wire control. In this case, the - speed function is automatically assigned to the logic input with the highest index (for example : LI3 (+ speed), LI4 (- speed)).

<u>In both cases of operation, the maximum speed is given by the references applied to the analog inputs. For example, connect AI1 to +10V.</u>

ENGLISH

Preset speeds

2, 4 or 8 speeds can be preset, requiring 1, 2, or 3 logic inputs respectively.

The following order of assignments must be observed : PS2 (LIx), then PS4 (LIy), then PS8 (LIz).

2 preset speeds		4 preset speeds			8 preset speeds			
Assign : LIx to PS2		Assign : LIx to PS2 then, LIy to PS4			Assign : LIx to PS2 LIy to PS4, then LIz to PS8			
LIx	speed reference	LIy	LIx	speed reference	LIz	LIy	LIx	speed reference
0	LSP+reference	0	0	LSP+reference	0	0	0	LSP+reference
1	HSP	0	1	SP2	0	0	1	SP2
		1	0	SP3	0	1	0	SP3
		1	1	HSP	0	1	1	SP4
					1	0	0	SP5
					1	0	1	SP6
					1	1	0	SP7
					1	1	1	HSP

To unassign the logic inputs, the following order must be observed : PS8 (LIz), then PS4 (LIy), then PS2 (LIx).

Reference switching :

Switching of two references (AI1 reference and AI2 reference) by logic input command.
This function automatically assigns AI2 to speed reference 2.

Connection diagram

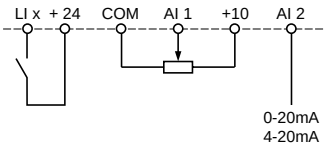

Open contact, reference = AI2
Closed contact, reference = AI1

Freewheel stop

Causes the motor to stop using the resistive torque only. The motor power supply is cut.
A freewheel stop is obtained when the logic input opens (state 0).

DC injection stop

An injection stop is obtained when the logic input closes (state 1).

Fast stop :

Braked stop with the deceleration ramp time reduced by a reduction factor dCF which appears in the drive menu.
A fast stop is obtained when the logic input opens (state 0).

Motor switching :

This function is used to switch between two motors with different power ratings using the same speed controller. An appropriate sequence must be installed on the speed controller output. Switching is carried out with the motor stopped and the speed controller locked. The following internal parameters are automatically switched by the logic command :

- nominal motor current
- brake release current
- injection current

This function automatically inhibits thermal protection of the second motor.
Accessible parameter : Motor power ratio (PCC) in the drive menu.

Second torque limit :

Reduction of the maximum motor torque when the logic input is active.
Parameter tL2 in the adjust menu.

Fault reset :

Two types of reset are available : partial or general (rSt parameter in the "fault" menu).

Partial reset (rSt = RSP) :

Used to clear the stored fault and reset the speed controller if the cause of the fault has disappeared.
Faults affected by partial clearing :

- line overvoltage
- DC bus overvoltage
- motor phase loss
- overhauling
- communication fault
- motor overload
- loss of 4-20mA
- external fault
- motor overheating
- serial link fault
- speed controller overheating
- overspeed

General reset (rSt = RSG) :

This inhibits all faults (forced operation) except SCF (motor short-circuit) while the assigned logic input is closed.

Forced local mode :

Used to switch between line control mode (serial link) and local mode (controlled via the terminals or via the display module).

Analog input application functions

Input AI1 is always the speed reference.

Assignment of AI2 and AI3

Summing speed reference : The frequency setpoints given by AI2 and AI3 can be summed with AI1.

Speed regulation with tachogenerator : (Assignment on AI3 only with an I/O extension card with analog input)
An external divider bridge is required to adapt the voltage of the tachogenerator. The maximum voltage must be between 5 and 9 V. A precise setting is then obtained by setting the dtS parameter available in the adjust menu.

PTC probe processing : (only with an I/O extension card with analog input). Used for the direct thermal protection of the motor by connecting the PTC probes in the motor windings to analog input AI3.
PTC probe characteristics :
Total resistance of the probe circuit at 20 °C = 750 Ω.

PI regulator : Can be assigned to AI2 or AI3 (with an I/O extension card with analog input). Used to connect a sensor and to activate the PI regulator.
Parameters which can be accessed in the adjust menu :
- proportional gain of the regulator (rPG)
- integral gain of the regulator (rIG)
- PI feedback scale factor (FbS)

If a logic input is assigned to “reference switching”, only input AI3 can be used for the PI function.

ENGLISH

Logic output application functions

Relay R2, LO solid state output (with I/O extension card)

Downstream contactor control (OCC): can be assigned to R2 or LO
Enables the speed controller to control an output contactor (located between the speed controller and the motor). The request to close the contactor is made when a run command appears. The request to open the contactor is made when there is no more current in the motor.

If a DC injection braking function is configured, it should not be left operating too long in stop mode, as the contactor only opens at the end of braking.

Speed controller running (RUN) : can be assigned to R2 or LO
The logic output is at state 1 if the motor power supply is provided by the speed controller (current present), or if a run command is present with a zero reference.

Frequency threshold reached (FTA) : can be assigned to R2 or LO
The logic output is at state 1 if the motor frequency is greater than or equal to the frequency threshold set by Ftd in the adjust menu.

Setpoint reached (SRA): can be assigned to R2 or LO
The logic output is at state 1 if the motor frequency is equal to the setpoint value.

High speed reached (FLA): can be assigned to R2 or LO
The logic output is at state 1 if the motor frequency is equal to HSP.

Current threshold reached (CTA): can be assigned to R2 or LO
The logic output is at state 1 if the motor current is greater than or equal to the current threshold set by Ctd in the adjust menu.

Thermal state reached (TSA) : can be assigned to R2 or LO
The logic output is at state 1 if the motor thermal state is greater than or equal to the thermal state threshold set by ttd in the adjust menu.

Brake sequence (BLC) : can only be assigned to relay R2
Used to control an electromagnetic brake by the speed controller, for vertical lifting applications. For brakes used for horizontal movement, use the “speed controller running“ function.

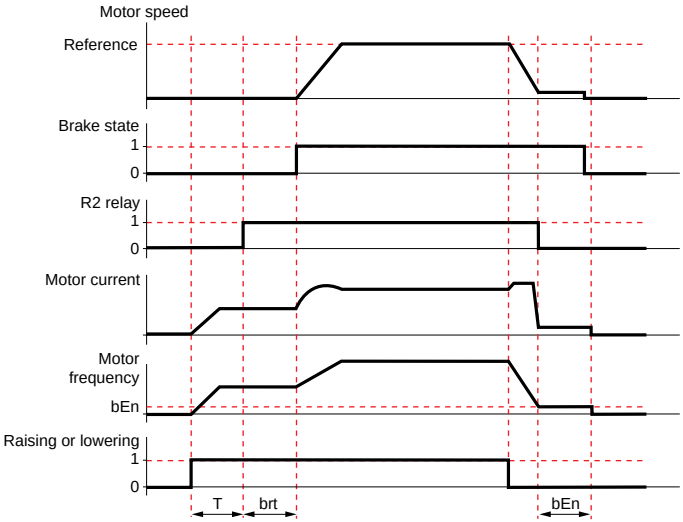

T = non-adjustable time delay

Settings which can be accessed in the adjust menu :

- brake release frequency (brL)
- brake release delay (brt)
- brake engage delay (bEn)
- brake release current (Ibr)
- brake engage frequency (bEt)

Recommended settings for brake control, for a vertical lifting application :

1 - Brake release frequency (brL) :
Set the brake release frequency to the value of the nominal slip multiplied by the nominal frequency in Hz (g x FS).

Calculation method : $\text{slip} = \frac{(Ns - Nr)}{Ns}$

Ns = synchronism speed in rpm.
(for 50 Hz supply : Ns = 3000 rpm for a motor with 1 pair of poles, 1500 rpm for a motor with 2 pairs of poles, 1000 rpm for a motor with 3 pairs of poles and 750 rpm for a motor with 4 pairs of poles,
for 60 Hz supply : Ns = 3600 rpm for a motor with 1 pair of poles, 1800 rpm for a motor with 2 pairs of poles, 1200 rpm for a motor with 3 pairs of poles and 900 rpm for a motor with 4 pairs of poles).

- Nr = nominal speed at nominal torque in rpm, use the speed indicated on the motor rating plate.

Release frequency = g x Fs.

- g = slip calculated previously
- Fs = nominal motor frequency (indicated on the motor rating plate)

Example : for a motor with 2 pairs of poles, 1430 rpm given on plate, 50 Hz supply.
g = (1500 - 1430) / 1500 = 0.0466
Brake release frequency = 0.0466 x 50 = 2.4 Hz

2 - Brake release current (Ibr) :

Adjust the brake release current to the nominal current indicated on the motor.

Note regarding points 1 and 2 : the values indicated (release current and release frequency) correspond to theoretical values. If during testing, the torque is insufficient using these theoretical values, retain the brake release current at the nominal motor current and lower the brake release frequency (up to 2/3 of the nominal slip). If the result is still not satisfactory, return to the theoretical values then increase the brake release current (the maximum value is imposed by the speed controller) and increase the brake release frequency gradually.

3 - Acceleration time :

For lifting applications, it is advisable to set the acceleration ramps to more than 0.5 seconds. Ensure that the speed controller does not exceed the current limit.

The same recommendation applies for deceleration.
Note : for a lifting movement, a braking resistor should be used. Ensure that the settings and configurations selected cannot cause a drop or a loss of control of the lifted load.

4 - Brake release delay (brt) :

Adjust according to the type of brake. It is the time required for the mechanical brake to open.

5 - Brake engage frequency (bEt) :
Set to twice the nominal slip (in our example 2 x 2.4 = 4.8 Hz). Then adjust according to the result.

6 - Brake engage delay (bEn) :
Adjust according to the type of brake. It is the time required for the mechanical brake to close.

AO analog output application functions

Motor current (code OCR) : the image of the motor rms current.
20 mA corresponds to twice the nominal speed controller current.

Motor frequency (Code OFR) : the motor frequency estimated by the speed controller.
20 mA corresponds to the maximum frequency (parameter tFr)

Output ramp (Code ORP) : the image of the ramp output frequency.
20 mA corresponds to the maximum frequency (parameter tFr)

Motor torque (Code TRQ) : the image of the motor torque.
20 mA corresponds to twice the nominal motor torque.

This menu can be accessed when the switch is in position 🔓.
Modifications can only be made in stop mode with the speed controller locked.

Label	Code	Description	Factory setting
Auto Restart	Atr	This function is used to restart the speed controller automatically if a fault has disappeared (Yes/No option). Automatic restarting is possible after the following faults : - line overvoltage - DC bus overvoltage - external fault - motor phase loss - serial link fault - communication fault - loss of 4-20 mA reference - motor overload (condition : thermal state less than 100 %) - speed controller overheating (condition : speed controller thermal state less than 70 %) - motor overheating (condition : resistance of probes less than 1,500 Ohms) When the function is activated and after stopping, the fault relay remains closed on one or more of these faults, and when the conditions for restarting are correct (disappearance of the fault) the speed controller attempts a start after a 30 s delay. A maximum of 6 attempts are made when the speed controller cannot start. If all 6 fail, the speed controller remains locked definitively with the fault relay open, until it is reset by being switched off. ⚠ This function requires the associated sequence to be maintained. **Ensure that accidental restarting will not pose any danger to either equipment or personnel.**	No
Reset Type	rSt	This function can be accessed if the fault reset is assigned to a logic input. 2 possible options : partial reset (RSP), general reset (RSG) Faults affected by a partial reset (rSt = RSP) - line overvoltage - DC bus overvoltage - motor overheating - loss of 4-20mA - motor overload - overhauling - motor phase loss - speed controller overheating - serial link fault - external fault - communication fault - overspeed Faults affected by a general reset (rSt = RSG) : all faults. The general reset actually inhibits all the faults (forced operation). To configure rSt = RSG : 1 - Display RSG. 2 - Press the "ENT" key. 3 - The speed controller displays "See manual". 4 - Press ▲ then ▼ then "ENT".	RSP

ENGLISH

Label	Code	Description	Factory setting
OutPhaseLoss	OPL	Used to enable the motor phase loss fault. (Fault is disabled if an isolator is used between the speed controller and the motor). Yes / No options	Yes
InPhaseLoss	IPL	Used to enable the line phase loss fault. (Fault is disabled if there is a direct power supply via a DC bus) Yes / No options This fault does not exist on the ATV58•U09M2, U18M2, U29M2 and U41M2.	Yes
Cont. Stop	StP	Controlled stop on a line phase loss. This function is only operational if parameter IPL is set to No. If IPL is set to Yes, leave StP in position No. Possible choices : **No** : locking on loss of line supply **MMS** : Maintain DC Bus : voltage for the speed controller control is maintained by the kinetic energy restored by the inertia, until the USF fault (undervoltage) occurs **FRP** : Follow ramp : deceleration following the programmed dEC or dE2 ramp until a stop or until the USF fault (undervoltage) occurs. This operation does not exist on ATV58•U09M2, U18M2, U29M2 and U41M2.	No
ThermProType	tHt	Defines the type of indirect motor thermal protection provided by the speed controller. If the PTC probes are connected to the speed controller, this function is not available. No thermal protection : NO: No Prot. Self-cooled motor (ACL) : the speed controller takes account of a derating depending on the rotation frequency. Force-cooled motor (FCL) : the speed controller does not take account of a derating depending on the rotation frequency.	ACL
LossFollower	LFL	Used to enable the loss of 4-20 mA reference fault. This fault can only be configured if the min/max AI2 ref. parameters (CrL and CrH) are greater than 3 mA. Yes / No options. If CrL>CrH, LFL is locked on Yes.	No
Catch On Fly	FLr	Used to enable a smooth restart after one of the following events : - loss of line supply or simple power off - fault reset or automatic restart. - freewheel stop or injection stop with logic input - uncontrolled loss downstream of the speed controller Yes / No options. If relay R2 is assigned to the brake sequence function, the FLr parameter remains locked on No.	No
RampNotFoll	Sdd	This function can be accessed if feedback via tachogenerator or pulse generator is programmed. When enabled, it is used to lock the speed controller, if a speed error is detected (difference between the stator frequency and the measured speed). Yes / No options.	No

ENGLISH

This menu can be accessed when the switch is in position 🔓.
The operations are only possible in stop mode with the speed controller locked.

The display module is used to store 4 files containing the speed controller configurations.

Label	Code	Description	Factory setting
File 1 State File 2 State File 3 State File 4 State	F 1 S F 2 S F 3 S F 4 S	Used to display the state of the corresponding file. Possible states : **FRE** : file free (state when display module is delivered) **EnG** : A configuration has already been saved in this file	FRE FRE FRE FRE
Operat.Type	F O t	Used to select the operation to be performed on the files. Possible operations : **NO** : no operation requested (default value on each new connection of the display module to the speed controller) **STR** : operation to save the speed controller configuration in a file on the display module **REC** : transfer of the content of a file to the speed controller **Ini** : return of the speed controller to factory settings ⚠ A return to the factory settings cancels all your settings and your configuration. **To take effect, it must be confirmed by enabling the parameter FLn = UAr.**	NO
File No.	F L n	This parameter can only be accessed if the operation type is not NO. Confirming the number of a file launches the operation. Possible files : **UAr** : confirmation of the request to return to factory settings. Only appears if the operation is InI. 1 : corresponds to file no.1 on the display module (default value) 2 : corresponds to file no.2 on the display module 3 : corresponds to file no.3 on the display module 4 : corresponds to file no.4 on the display module	1

Operating mode

- Select REC or STR and press "ENT".
- Select UAr for the InI operation, or the file number (destination for STR, source for REC) and press the "ENT" key to confirm.

1 - If Operation = STR or InI :
The display automatically returns to the "Operat.Type" parameter, set to "NO".

2 - If Operation = REC, double confirmation is required :

- The display indicates : CHG Validate? ENT/ESC
- Press the "ENT" key to confirm.
- The display automatically returns to the "Operat.Type" parameter, set to "NO".

ENGLISH

Files menu (continued)

Label	Code	Description
Password	C O d	Confidential code

The speed controller configuration can be protected by a password (COd).

CAUTION : THIS PARAMETER SHOULD BE USED WITH CAUTION. IT MAY PREVENT ACCESS TO ALL PARAMETERS. ANY MODIFICATION TO THE VALUE OF THIS PARAMETER MUST BE CAREFULLY NOTED AND SAVED.

The code value is given by four figures, the last of which is used to define the level of accessibility required by the user.

8 8 8 8

This figure gives the access level permitted, without having the correct code.

Access to the menus according to the position of the access locking switch on the rear of the display module is always operational, within the limits authorized by the code.
The value Code 0000 (factory setting) does not restrict access.

The table below defines access to the menus according to the last figure in the code.

	Last figure in the code		
Menus	Access locked	Display	Modification
Adjust	0 exc. 0000 and 9	1	2
Level 2 : Adjust, Macro-config, Drive, Control, I/O, Fault, File (excluding code), Communication (if card present)	0 exc. 0000 and 9	3	4
Application (if card present)	0 exc. 0000 and 9	5	6
Level 2 and Application (if card present)	0 exc. 0000 and 9	7	8

For access to the APPLICATION menu, refer to the application card documentation.

The code is modified using the ▲ and ▼ keys.

If an incorrect code is entered, it is refused and the following message is displayed :

C O d
Password Fault

After pressing the ENT or ESC key on the keypad, the value displayed for the Code parameter changes to 0000 : the level of accessibility does not change. The operation should be repeated.

To access menus protected by the access code the user must first enter this code which can always be accessed in the Files menu.

Communication menu

This menu is only displayed if a communication card is installed. It can be accessed when the switch is in position 🔓. Configuration is only possible in stop mode with the speed controller locked.

For use with a communication option card, refer to the document provided with this card.

For communication via the RS485 link on the basic product, refer to the document provided with the RS485 connection kit.

Application menu

This menu is only displayed if a “client application“ card is installed. It can be accessed when the switch is in position 🔓. Configuration is only possible in stop mode with the speed controller locked. Refer to the document provided with the card.

Assistance during operation

See the indicator lamps explained in the “Introduction”.

Maintenance

Before working on the speed controller, switch off the power supply and wait for the capacitors to discharge (approximately 1 minute) : the green LED on the front panel of the speed controller goes out.

CAUTION : the DC voltage at the + and - terminals or PA and PB terminals may reach 900 V depending on the line voltage.

If a problem arises during setup or operation, ensure that the recommendations relating to the environment, mounting and connections have been observed. **Refer to the Altivar User's Manual**.

Servicing

The Altivar 58 does not require any preventative maintenance. It is nevertheless advisable to perform the following regularly :
- check the condition and tightness of connections
- ensure that the temperature around the unit remains at an acceptable level, and that ventilation is effective (average service life of fans : 3 to 5 years depending on the operating conditions)
- remove any dust from the speed controller

Assistance with maintenance

The first fault detected is stored and displayed on the display module screen : the speed controller locks, the red LED lights, and fault relay R1 trips.

Clearing the fault

Cut the power supply to the speed controller in the event of a non-resettable fault.
Locate the cause of the fault in order to eliminate it.
Reconnect the power supply : this clears the fault if it has disappeared.

In some cases, there may be an automatic restart once the fault has disappeared, if this function has been programmed.

Fault displayed	Probable cause	Procedure, remedy
PHF Mains Phase Loss	- speed controller incorrectly supplied or fuses blown - transient fault on one phase	- check the power connection and the fuses - reset
USF Undervoltage	- line supply too low - transient voltage dip - damaged load resistor	- check the line voltage - change the load resistor
OSF Overvoltage	- line supply too high	- check the line voltage
OHF Drive Overheat	- heatsink temperature too high	- monitor the motor load, the speed controller ventilation and wait for it to cool down before resetting
OLF Mot Overload	- thermal trip due to prolonged overload	- check the thermal protection setting, monitor the motor load - a reset will be possible after approximately 7 minutes
ObF Overbraking	- braking too sudden or driving load	- increase the deceleration time, add a braking resistor if necessary
OPF Motor Phase Loss	- one phase cut at the speed controller output	- check the motor connections
LFF Loss Follower	- loss of the 4-20mA setpoint on input AI2	- check the connection of the setpoint circuits
OCF Overcurrent	- ramp too short - inertia or load too high - mechanical locking	- check the settings - check the size of the motor/speed controller/load - check the state of the mechanism
SCF Short Circuit	- short-circuit or grounding at the speed controller output	- check the connection cables with the speed controller disconnected, and the motor insulation. Check the speed controller transistor bridge
CrF Precharge Fault	- load relay control fault - damaged load resistor	- check the connectors in the speed controller and the load resistor
SLF Serial Link Flt	- incorrect connection on the speed controller terminal port	- check the connection on the speed controller terminal port
OtF Motor Overheat	- motor temperature too high (PTC probes)	- check the motor ventilation and the ambient temperature, monitor the motor load - check the type of probes used
tSF PTC Therm Sensor	- incorrect connection of probes to the speed controller	- check the connection of the probes to the speed controller - check the probes

ENGLISH

Fault displayed	Probable cause	Procedure, remedy
EEF EEProm Fault	- error saving in EEPROM	- cut the power supply to the speed controller and reset
InF Internal Fault	- internal fault - connector fault	- check the connectors in the speed controller
EPF External Fault	- fault triggered by an external device	- check the device which has caused the fault and reset
SPF SP. Feedbk. Loss	- no speed feedback	- check the connection and the mechanical coupling of the speed sensor
AnF Load Veer. Flt	- non-following of ramp - speed inverse to the setpoint	- check the speed feedback setting and wiring - check the suitability of the settings for the load - check the size of the motor - speed controller and the possible need for a braking resistor
SOF OverspeeD	- instability - driving load too high	- check the settings and the parameters - add a braking resistor - check the size of the motor/speed controller/load
CnF Network Fault	- communication fault on the fieldbus	- check the network connection to the speed controller - check the time-out
ILF Int. Comm. Flt	- communication fault between the option card and the control card	- check the connection of the option card to the control card
CFF Rating Fault-ENT Option Fault-ENT Opt. Missing-ENT CKS Fault - ENT	Error probably caused when changing the card : - change of rating of the power card - change of the type of option card or installation of an option card if there was not one already and if the macro-configuration is CUS - option card removed - inconsistent configuration saved The following message appears when ENT is pressed : Fact.Set? ENT/ESC	- check the hardware configuration of the speed controller (power card, others) - cut the power supply to the speed controller then reset - save the configuration in a file on the display module - press ENT to return to the factory settings
CFI Config. Fault	- inconsistent configuration sent to speed controller via serial link	- check the configuration sent previously - send a consistent configuration

ENGLISH

Speed controller reference ATV58 .....
Client identification number (if applicable) :
Option card : No ☐ Yes ☐ : reference .....

Access code : No ☐ Yes ☐ : .....
Configuration in file no. ..... on the display module
Macro-configuration : .....

For CUS : Customize configuration, assign the I/O as follows :

	ALTIVAR	Option card
Logic inputs	LI 1 : LI 2 : LI 3 : LI 4 :	LI 5 : LI 6 :
Analog inputs	AI 1 : AI 2 :	AI 3 :
Relay	R2 :	
Logic output		LO :
Analog output		AO :

Adjustment parameters :

Code	Factory setting	Client setting (1)	Code	Factory setting	Client setting (1)
ACC	3 s	s	SP5	25 Hz	Hz
dEC	3 s	s	SP6	30 Hz	Hz
LSP	0 Hz	Hz	SP7	35 Hz	Hz
HSP	50 / 60 Hz	Hz	JOG	10 Hz	Hz
FLG	20 %	%	JGt	0.5 s	s
StA	20 %	%	brL	0 Hz	Hz
ItH	0.9 In	A	Ibr	0 A	A
IdC	0.7 ItH	A	brt	0 s	s
tdC	0.5 s	s	bEn	0 Hz	Hz
AC2	5 s	s	bEt	0 s	s
dE2	5 s	s	rPG	1	
tLS	no	no ☐ or s	rIG	1 / s	/ s
UFr	100 %	%	Fbs	0.1	
SLP	100 %	%	dts	1	
PFL	20 %	%	Ctd	1.36 In	A
SP2	10 Hz	Hz	ttd	100 %	%
SP3	15 Hz	Hz	tL2	200%	%
SP4	20 Hz	Hz	Ftd	50/60 Hz	Hz

(1) leave blank when the parameter is missing

ENGLISH

Drive menu parameters :

Code	Factory setting	Client setting (1)	Code	Factory setting	Client setting (1)
UnS	acc. to model	V	tLI	200%	%
FrS	50 / 60 Hz	Hz	CLI	1.36 In	A
nCr	0.9 In	A	AdC	yes	
nSP	acc. to model	rpm	JPF	0 Hz	Hz
COS	acc. to model		PCC	1	
tUn	no		SFt	LF	
tFr	60 / 72 Hz	Hz	SFr	4 kHz	kHz
nLd	no		nrd	yes	
brA	no		SPC	no	
Frt	0 Hz	Hz	PGt	DET	
rPt	LIN		PLS	1	
dCF	4				

(1) leave blank when the parameter is missing

Control menu parameters :

Code	Factory setting	Client setting (1)	Code	Factory setting	Client setting (1)
tCC	2 W		Str	no	
tCt	LEL		LCC	no	
CrL	4 mA	mA	PSt	yes	
CrH	20 mA	mA	Add	0	

(1) leave blank when the parameter is missing

Fault menu parameters :

Code	Factory setting	Client setting (1)	Code	Factory setting	Client setting (1)
Atr	no		LFL	no	
rSt	RSP		FLr	no	
OPL	yes		StP	no	
IPL	yes		Sdd	no	
tHt	ACL				

(1) leave blank when the parameter is missing

ENGLISH

LANGUAGE menu

Label	Code
English	LnG
Français	LnG
Deutsch	LnG
Español	LnG
Italiano	LnG

MACRO-CONFIG menu

Label	Code
Hdg : Handling	CFG
GEn : General Use	CFG
VT : Var. Torque	CFG

1 - DISPLAY menu

Label	Code
Var. State	---
Freq. Ref.	FrH
Output Freq.	rFr
Motor Speed	SPd
MotorCurrent	LCr
MainsVoltage	ULn
MotorThermal	tHr
DriveThermal	tHd
Last Fault	LFt
Freq. Ref.	LFr

2 - ADJUST menu

Label	Code
Freq. Ref. - Hz	LFr
Acceleration - s	ACC
Deceleration - s	dEC
Accelerate 2 - s	AC2
Decelerate 2 - s	dE2
Low Speed - Hz	LSP
High Speed - Hz	HSP
Gain - %	FLG
Stability - %	StA
ThermCurrent - A	ItH
DC Inj.Curr. - A	IdC
DC Inj. Time - s	tdC
Jump Freq. - Hz	JPF
LSP Time - s	tLS
IR Compens. - %	UFr
Slip Comp. - %	SLP
Preset SP.2- Hz	SP2
Preset SP.3- Hz	SP3
Preset SP.4- Hz	SP4
Preset SP.5- Hz	SP5

2 - ADJUST menu (continued)

Label	Code
Preset SP.6 - Hz	SP6
Preset SP.7 - Hz	SP7
BrReleaseLev - Hz	brL
BrRelease I - A	Ibr
BrReleasTime - s	brt
BrEngage Lev - Hz	bEn
BrEngageTime - s	bEt
Tacho Coeff.	dtS
Curr.Lev.Att - A	Ctd
Jog Freq. - Hz	JOG
JOG Delay - s	JGt
Trq.Limit 2 - %	tL2
V/f Profile - %	PFL
PI Prop. Gain	rPG
PI Int. Gain - /s	rIG
PI Coeff.	FbS
Freq.Lev.Att - Hz	Ftd
Curr.Lev.Att - A	Ctd
ThermLev.Att - %	ttd

3 - DRIVE menu

Label	Code
Nom.Mot.Volt - V	UnS
Nom.Mot.Freq - Hz	FrS
Nom.Mot.Curr - A	nCr
Nom.MotSPeed -rPm	nSP
Mot. Cos Phi	COS
Auto Tuning	tUn
Max. Freq. - Hz	tFr
Energy Eco	nLd
DecRampAdapt	brA
SwitchRamp2 - Hz	Frt
Ramp Type	rPt
DECRampCoeff	dCF
Trq.Limit - %	tLI
Int. I Lim - A	CLI
Auto DC Inj.	AdC
Motor P Coef	PCC
Sw Freq. Type	SFt
Sw Freq -kHz	SFr
Noise Reduct	nrd
SP'l Motor	SPC
PG Type	PGt
Num. Pulses	PLS

4 - CONTROL menu

Label	Code
TermStripCon	tCC
Type 2 Wire	tCt
AI2 min Ref. - mA	CrL
AI2 Max Ref - mA	CrH
Save Ref.	Str
KeyPad Comm.	LCC
Stop Priorit	PSt
DriveAddress	Add

5 - I/O menu

Label	Code
LI2 Assign.	LI2
LI3 Assign.	LI3
LI4 Assign.	LI4
LI5 Assign.	LI5
LI6 Assign.	LI6
NO :Not assigned RV :Reverse RP2:Switch ramp2 JOG:JOG +SP: + Speed -SP: - Speed PS2: 2 preset SP PS4: 4 preset SP PS8: 8 preset SP NST:Freewhl Stop DCI:DC inject. FST:Fast stop PCC:Multi. Motor TL2:Trq.Limit 2 FLO:Forced Local RST:Fault Reset RFC:Auto/manu	
R2 Assign. LO Assign.	r2 LO
NO:Not assigned RUN:DriveRunning OCC:OutputCont. FTA:Freq Attain. FLA:HSP Attained CTA:I Attained SRA:FRH Attained TSA:MtrTherm Lvl BLC:Brk Logic	

5 - I/O menu (continued)

Label	Code
AI2 Assign. AI3 Assign.	AI2 AI3
NO:Not assigned FR2:Speed Ref2 SAI:Summed Ref. PIF:PI regulator SFB:Tacho feedbk PTC:Therm.Sensor	
AO Assign.	AO
NO:Not assigned OCR:Motor Curr. OFR:Motor Freq. ORP:Output Ramp TRQ:Motor torque	

6 - FAULT menu

Label	Code
Auto Restart	Atr
Reset Type	rSt
OutPhaseLoss	OPL
InPhaseLoss	IPL
Cont. Stop	StP
ThermProType	tHt
LossFollower	LFL
Catch On Fly	FLr
RampNotFoll	Sdd

7 - FILES menu

Label	Code
File 1 State	F1S
File 2 State	F2S
File 3 State	F3S
File 4 State	F4S
Operat.Type	FOt
File No.	FLn

8 - COMMUNICATION menu

Refer to the documentation provided with the communication card.

9 - APPLICATION menu

Refer to the documentation provided with the application card.

ENGLISH

Index

0 33 89110 82475 9

VVDED397047

82475

W9 1493589 01 11 A02

1998-01