BECKHOFF

Digital Servo Amplifier

AX2500

Assembly, Installation, Setup

Keep all product manuals as a product component
during the life span of the servo amplifier.
Pass all product manuals to future
users / owners of the servo amplifier.

Edition 06/2007

Previous editions

Edition	Comments
07/03	First edition
07/05	SSI emulation updated (Multiturn), UL/cUL information updated, typographical changes, chapter 1 new sorted, several corrections
02/06	Chapter feedback updated, label updated, several small corrections
06/07	PROFIBUS Topologie, part number scheme, trouble-shooting reduced, "Components of a servo system" extended and moved, disposal acc. to WEEE-2002/96/EG, new document structure, Quickstart integrated, EtherCat type new, 24V supply voltage hints, feedback expanded, BISS-Interface, Stop/Emergency-Stop expanded, shock-hazard protection new, DC-Bus link expanded, accessories removed, timing diagramm motor brake

WINDOWS is a registered trademark of Microsoft Corp.

HIPERFACE is a registered trademark of Max Stegmann GmbH

EnDat is a registered trademark of Dr.Johannes Heidenhain GmbH

Technical changes to improve the performance of the equipment may be made without notice !

Printed in the Federal Republic of Germany

All rights reserved. No part of this work may be reproduced in any form (by printing, photocopying, microfilm or any other method) or processed, copied or distributed by electronic means without the written permission of BECKHOFF.

page

1 General
1.1 About this manual . . . 7
1.2 Hints for the online edition (PDF format) . . . 7
1.3 Symbols used . . . 7
1.4 Abbreviations used . . . 8
2 Safety
2.1 Safety Instructions . . . 9
2.2 Use as directed . . . 10
3 Standards
3.1 European Directives and Standards . . . 11
3.2 American Directives and Standards . . . 11
3.3 Asian Directives and Standards . . . 11
3.4 Approvals . . . 12
3.4.1 CE conformance . . . 12
3.4.2 UL and cUL- Conformance . . . 12
4 Handling
4.1 Transport . . . 13
4.2 Packaging . . . 13
4.3 Storage . . . 13
4.4 Maintenance / Cleaning . . . 13
4.5 Disposal . . . 13
5 Package
5.1 Package supplied . . . 14
5.2 Nameplate . . . 14
5.3 Part number scheme . . . 15
6 Technical description
6.1 Digital servo amplifiers in the series AX2500 . . . 16
6.2 Technical data . . . 18
6.2.1 Rated data . . . 18
6.2.2 Inputs / Outputs . . . 19
6.2.3 Recommended tightening torques . . . 19
6.2.4 Fusing . . . 19
6.2.5 Ambient conditions, ventilation, mounting position . . . 20
6.2.6 Conductor cross-sections . . . 20
6.3 LED display . . . 20
6.4 Control for motor holding brake . . . 21
6.5 Grounding system . . . 22
6.6 Regen circuit . . . 22
6.7 Switch-on/-off behavior . . . 23
6.7.1 Behavior in standard operation . . . 24
6.7.2 Behavior in the event of an error (with standard setting) . . . 25
6.8 Stop / Emergency Stop Function to EN 60204 . . . 26
6.8.1 Stop: Standards . . . 26
6.8.2 Emergency Stop: Standards . . . 27
6.8.3 Implementation of the Stop Category 0 . . . 28
6.8.4 Implementation of the Stop Category 1 . . . 29
6.8.5 Implementation of the Stop Category 2 . . . 30
6.9 Shock-hazard protection . . . 31
6.9.1 Leakage current . . . 31
6.9.2 Residual-current circuit breakers (FI) . . . 31
6.9.3 Isolating transformers . . . 32

page

7 Mechanical Installation
7.1 Important notes . . . 33
7.2 Guide to mechanical installation . . . 33
7.3 Mounting . . . 34
7.4 Dimensions . . . 35
7.5 Add-on fan . . . 36
8 Electrical Installation
8.1 Important notes . . . 37
8.2 Guide to electrical installation . . . 38
8.3 Wiring . . . 39
8.3.1 Important notes . . . 39
8.3.2 Shield connection on the front panel . . . 40
8.3.3 Requirements to cables . . . 41
8.4 Components of a servo system . . . 42
8.5 Block diagram . . . 43
8.6 Connector assignments . . . 44
8.7 Connection diagram AX250x and AX251x (overview) . . . 45
8.8 Connection diagram AX252x (overview) . . . 46
8.9 Power supply, master only . . . 47
8.9.1 Mains supply connection (X0) . . . 47
8.9.2 24V auxiliary voltage (X0) . . . 47
8.10 DC Bus link (X0) . . . 48
8.11 Motor connection with brake (X6) . . . 48
8.12 External regen resistor (X0), master only . . . 48
8.13 Feedback . . . 49
8.13.1 Resolver (X5) . . . 50
8.13.2 Sine encoder 5V with BISS (X2) . . . 51
8.13.3 Sine Encoder with EnDat 2.1 or HIPERFACE (X2) . . . 52
8.13.4 Sine Encoder without data channel (X2) . . . 53
8.13.5 Incremental or sine encoder with hall sensors (X2) . . . 54
8.13.6 Incremental Encoder (X4) . . . 55
8.14 Electronic Gearing, Master-slave operation . . . 56
8.14.1 Connection to a AX2500 master, 5 V signal level (X4) . . . 57
8.14.2 Connection to incremental encoder master with 24 V signal level (X3) . . . 57
8.14.3 Connection to a sine-cosine encoder master (X2) . . . 58
8.14.4 Connection to a SSI encoder (X4) . . . 59
8.14.5 Connection to stepper motor controllers (pulse and direction) . . . 59
8.14.5.1 Step/Direction with 5 V signal level (X4) . . . 60
8.14.5.2 Step/Direction with 24 V signal level (X3) . . . 60
8.15 Encoder emulations . . . 61
8.15.1 Incremental encoder output - A quad B (X4) . . . 61
8.15.2 SSI output (X4) . . . 62
8.16 Digital and analog inputs and outputs . . . 63
8.16.1 Analog input (X3) . . . 63
8.16.2 Digital inputs (X3) . . . 64
8.16.3 Digital outputs (X3) . . . 65
8.16.4 Digital I/O on the Master (X1) . . . 66
8.17 RS232 interface, PC connection (X8), master only . . . 67
8.18 Fieldbus connection . . . 68
8.18.1 CANopen interface (X7) . . . 68
8.18.2 PROFIBUS interface (X7), option . . . 69
8.18.3 SERCOS interface (X7), option . . . 70
8.18.3.1 Light emitting diodes (LEDs) . . . 70
8.18.3.2 Connection diagram . . . 70
8.18.4 EtherCat interface (X7), option . . . 71
8.18.4.1 EtherCat connection, connector X7A/B (RJ-45) . . . 71
8.18.4.2 Connection diagram . . . 71

page

9 Setup
9.1 Important notes . . . 73
9.2 Setup software . . . 74
9.2.1 General . . . 74
9.2.1.1 Use as directed . . . 74
9.2.1.2 Software description . . . 74
9.2.1.3 Hardware requirements . . . 75
9.2.1.4 Operating systems . . . 75
9.2.2 Installation under WINDOWS 98 / 2000 / ME / NT / XP . . . 75
9.3 Quickstart, drive test . . . 76
9.3.1 Preparation . . . 76
9.3.1.1 Unpacking, Mounting and Wiring the Servo Amplifier . . . 76
9.3.1.2 Documents . . . 76
9.3.1.3 Minimum Wiring for Drive Test . . . 77
9.3.2 Connect . . . 78
9.3.3 Important Screen Elements . . . 79
9.3.4 Basic Setup . . . 80
9.3.5 Motor (synchronous) . . . 81
9.3.6 Feedback . . . 82
9.3.7 Save Parameters and Restart . . . 83
9.3.8 Jogging the Motor (Speed Control) . . . 84
9.3.9 Status . . . 85
9.3.10 Monitor . . . 85
9.3.11 Additional Setup Parameters . . . 85
9.4 Multi-axis systems . . . 86
9.4.1 Station Address . . . 86
9.4.2 Example of connections for multi-axis system . . . 87
9.5 Key pad controls and status displays . . . 88
9.5.1 Operating . . . 88
9.5.2 Status display on the axis module . . . 88
9.5.3 Status display on the master . . . 89
9.6 Error messages . . . 90
9.7 Warning messages . . . 91
9.8 Trouble Shooting . . . 92
10 Appendix
10.1 Glossary . . . 93
10.2 Index . . . 95

This page has been deliberately left blank.

1 General

1.1 About this manual

This manual describes the digital servo amplifiers of the AX2500 series.

A more detailed description of the field bus interfaces and the digital connection to automation systems can be found on the accompanying CD-ROM in PDF format (system requirements: WINDOWS, Internet browser, Acrobat Reader) in several language versions.

You can print out this documentation on any standard printer. A printed copy of the documentation is available from us at extra cost.

This manual makes the following demands on qualified personnel :

Transport:	**only by personnel with knowledge of handling electrostatically sensitive components.**
Unpacking:	**only by electrically qualified personnel.**
Installation:	**only by electrically qualified personnel.**
Setup:	**only by qualified personnel with extensive knowledge of electrical engineering / drive technology.**

1.2 Hints for the online edition (PDF format)

Bookmark:
Table of contents and index are active bookmarks.

Table of contents and index in the text:
The lines are active cross references. Click on the desired line and the appropriate page is indicated.

Page/chapter numbers in the text:
Page/chapter numbers with cross references are active. Click at the page/chapter number to reach the indicated target.

1.3 Symbols used

DANGER !	Danger to personnel from electricity and its effects effects	WARNING !	Danger to maschinery, general warning		Important notes
⇨ p.	see page	●	special emphasis		

1.4 Abbreviations used

The abbreviations used in this manual are explained in the table below.

Abbrev.	Meaning
AGND	Analog ground
BTB/RTO	Ready to operate
CAN	Fieldbus (CANopen)
CE	Communité Europeenne (=EC)
CLK	Clock signal
COM	Serial interface for a PC-AT
DGND	Digital ground
DIN	Deutsches Institut für Normung
Disk	Magnetic storage (diskette, hard disk)
EEPROM	Electrically erasable memory
EMC	Electromagnetic compatibility
EMI	Elektromagnetic interference
EN	European standard
ESD	Electrostatic discharge
F-SMA	Fiber Optic Cable connector according to IEC 60874-2
IEC	International Electrotechnical Commission
IGBT	Insulated gate bipolar transistor
ISO	International Standardization Organization
LED	Light-emitting diode
MB	Megabyte
NI	Zero pulse
NSTOP	Limit-switch input, rot. dir. CCW (left)
PC	Personal Computer
PELV	Protected low voltage
PLC	Programmable logic controller
PSTOP	Limit-switch input, rot. dir. CW (right)
PSU	Power supply unit
PWM	Pulse-width modulation
RAM	Volatile memory
RBext	External regen resistor
RBint	Internal regen resistor
RES	Resolver
ROD 426	A quad B Encoder
SRAM	Static RAM
SSI	Synchronous serial interface
UL	Underwriter Laboratory
V AC	AC voltage
V DC	DC voltage
VDE	Verein deutscher Elektrotechniker

2 Safety

2.1 Safety Instructions

- **Only properly qualified personnel are permitted to carry out activities such as transport, installation, commissioning and maintenance. Properly qualified persons are those who are familiar with the transport, assembly, installation, commissioning and operation of the product, and who have the appropriate qualifications for their job. The qualified personnel must know and observe the following standards and regulations:**
  - **IEC 60364 or DIN VDE 0100**
  - **IEC 60664 or DIN VDE 0110**
  - **national accident prevention regulations or BGV A3**
- **Read this documentation before carrying out the installation and commissioning. Incorrect handling of the servo amplifier can lead to personal injury or material damage. It is vital that you keep to the technical data and information on connection requirements (nameplate and documentation).**
- **Discharge your body before touching the servo amplifier. The servo amplifiers contain electrostatically sensitive components which may be damaged by incorrect handling. Avoid contact with highly insulating materials (artificial fabrics, plastic film etc.). Place the servo amplifier on a conductive surface.**

- **The manufacturer of the machine must produce a hazard analysis for the machine and take appropriate measures to ensure that unforeseen movements do not result in personal injury or material damage.**
- **Do not open or touch the equipment during operation. Keep all covers and cabinet doors closed during operation. Touching the equipment is allowed during installation and commissioning for properly qualified persons only. Otherwise, there are deadly hazards, with the possibility of death, severe injury or material damage.**
  - **During operation, servo amplifiers may have uncovered live components, depending on their level of enclosure protection.**
  - **Control and power connections may be live, even though the motor is not rotating.**
  - **Servo amplifiers may have hot surfaces during operation. Surface can reach temperatures above 80°C.**
- **Never undo any electrical connections to the servo amplifier while it is live. There is a danger of electrical arcing with damage to contacts and personal injury.**
  Wait at least five minutes after disconnecting the servo amplifier from the main supply power before touching potentially live sections of the equipment (e.g. contacts) or undoing any connections. Capacitors can still have dangerous voltages present up to five minutes after switching off the supply power. To be sure, measure the voltage in the DC Bus link and wait until it has fallen below 40V.

2.2 Use as directed

- The servo amplifiers are components which are built into electrical equipment or machines, and can only be commissioned as integral components of such equipment.

- **The manufacturer of the machine must produce a hazard analysis for the machine and take appropriate measures to ensure that unforeseen movements do not result in personal injury or material damage.**

- **The servo amplifier should only be used with power supplies with a maximum symmetrical rated current of 5000A and a voltage of 115/230V AC (AX250x) or 400V AC (AX251x).**

Mains voltage	Servo amplifier
1 x 115V AC	only AX250x, unearthed operation is permissible
3 x 115V AC	only AX250x, unearthed operation is permissible
1 x 230V AC	only AX250x, unearthed operation is permissible
3 x 230V AC	all types, unearthed operation is permissible
3 x 400V AC	only AX251x, TN-system or TT-system with earthed neutral point

- If the servo amplifiers are used in residential areas, or in business or commercial premises, then additional filter measures must be implemented by the user.
- The AX2500 family of servo amplifiers is **only** intended to drive specific brushless synchronous servomotors with closed-loop control of torque, speed and/or position. The rated voltage of the motors must be at least as high as the DC Bus link voltage of the servo amplifier.
- The servo amplifiers may **only** be operated in a closed control cabinet, taking into account the ambient conditions defined on page 20. Ventilation or cooling measures may be required to keep the temperature below 45°C.
- Use only copper-cored cables for wiring. The conductor cross-sections can be taken from the European standard EN 60204 (or Table 310-16 of NEC for 60°C or 75°C in the column for AWG cross-sections).
- We can only guarantee that the system will conform to the standards cited on page 11 if the components used are exclusively those supplied by us (servo amplifier, motor, cables etc.).
- Not more than 7 axis modules can be connected to a master module.

3 Standards

3.1 European Directives and Standards

Servo amplifiers are components that are intended to be incorporated into electrical plant and machines for industrial use. When the servoamplifiers are built into machines or plant, the intended operation of the amplifier is forbidden until it has been established that the machine or plant fulfills the requirements of the EC Machinery Directive 98/37/EG and the EC Directive on EMC (89/336/EEC) and the Low Voltage Directive 73/23/EEC.

To fulfill the EC Machinery directive 98/37/EG, the following standards have to be applied:
EN 60204-1 (Safety and electrical equipment of machines)
EN 12100 (Safety of machines)

The manufacturer of the machine must produce a hazard analysis for the machine and take appropriate measures to ensure that unforeseen movements do not result in personal injury or material damage.

To fulfill the Low Voltage Directive 73/23/EEC, the following standards have to be applied:
EN 60204-1 (Safety and electrical equipment of machines)
EN 50178 (Equipment of high voltage plant with electronic devices)
EN 60439-1 (Low-voltage switchgear and controlgear assemblies)

To fulfill the EC EMC regulations 89/336/EEC, the following standards have to be applied:
EN 61000-6-1 or EN 61000-6-2 (noise immunity in the domestic range/industrial range)
EN 61000-6-3 or EN 61000-6-4 (noise emission in the domestic range/industrial range)

The manufacturer of the machine or plant is responsible for ensuring that they meet the limits required by the EMC regulations. Advice on the correct installation for EMC – such as shielding, grounding, arrangement of connectors and cable routing – can be found in this documentation.

The machine / plant manufacturer must examine whether with its machine / plant still further or other standards or EEC guidelines are to be used.

3.2 American Directives and Standards

Chapter in process

3.3 Asian Directives and Standards

Chapter in process

3.4 Approvals

3.4.1 CE conformance

Conformity with the EC Directive on EMC 89/336/EEC and the Low Voltage Directive 73/23/EEC is mandatory for servoamplifiers supplied within the European Union.
To fulfill the EMC directive, the standard EN 61800-3 is applied. The Declaration of Conformity form can be found on our website (download area).

In the reference to noise immunity the servoamplifier fulfills the requirement to the category second environment (industrial environment). For noise emission the amplifier meets the requirement to a product of the category C2 (motor cable ≤ 25m).

WARNING !

Warning!
This product can cause high-frequency interferences in non industrial environments which can require measures for interference suppression.

The servo amplifiers have been tested by an authorized testing laboratory in a defined configuration with the system components which are described in this documentation. Any divergence from the configuration and installation described in this documentation means that you will be responsible for carrying out new measurements to ensure that the regulatory requirements are fulfilled.

To fulfill the Low Voltage Directive, the standard EN 50178 has to be applied.

3.4.2 UL and cUL- Conformance

This servo amplifier is listed under UL file number **E217428**.

UL (cUL)-certified servo amplifiers (Underwriters Laboratories Inc.) fulfil the relevant U.S. and Canadian standard (in this case UL 840 and UL 508C).

This standard describes the fulfilment by design of minimum requirements for electrically operated power conversion equipment, such as frequency converters and servo amplifiers, which is intended to eliminate the risk of fire, electric shock, or injury to persons, being caused by such equipment.

UL(cUL) regulations also specify the minimum technical requirements of electrical devices, in order to take the necessary measures against the risk of fire, which can be triggered by electrically operated devices. The technical conformance with the U.S. and Canadian standard is determined by an independent UL (cUL) inspector through the type testing and regular checkups.

Apart from the notes on installation and safety in the documentation, the customer does not have to observe any other points in direct connection with the UL (cUL)-certification of the equipment.

UL 508C

UL 508C describes the fulfilment by design of minimum requirements for electrically operated power conversion equipment, such as frequency converters and servo amplifiers, which is intended to eliminate the risk of fire being caused by such equipment.

UL 840

UL 840 describes the fulfilment by design of air and insulation creepage spacings for electrical equipment and printed circuit boards.

4 Handling

4.1 Transport

- Transport only by qualified personnel in the manufacturer's original packaging
- Avoid shocks
- Transport temperature -25 to +70°C, max. rate of change 20°C/hour
- Transport humidity max. 95% relative humidity, no condensation

- **The servo amplifiers contain electrostatically sensitive components which can be damaged by incorrect handling. Discharge yourself before touching the servo amplifier. Avoid contact with highly insulating materials (artificial fabrics, plastic films etc.). Place the servo amplifier on a conductive surface.**
- If the packaging is damaged, check the unit for visible damage. In such a case, inform the shipper and the manufacturer.

4.2 Packaging

- Recyclable cardboard with inserts
- Dimensions AX252x (HxWxD) 100x300x270 mm
  AX250x/AX251x (HxWxD) 150x300x270 mm
- Labelling instrument label on outside of box

4.3 Storage

- Storage only in the manufacturer's original recyclable packaging
- Max. stacking height: 8 cartons
- Storage temp. –25 to +55°C, max. rate of change 20°C/hr
- Humidity relative humidity max. 5...95%, no condensation
- Storage duration
  < 1 year without restriction
  > 1 year: capacitors must be **re-formed** before the servo amplifier is commissioned. To do this, remove all electrical connections and supply the servo amplifier for about 30 min. from 230V AC, single-phase, on terminals L2 / L3.

4.4 Maintenance / Cleaning

The devices do not require any maintenance, opening the devices invalidates warranty.

Cleaning : — if the casing is dirty, clean with Isopropanol or similar
do not immerse or spray
— if there is dirt inside the unit it must be cleaned by the manufacturer
— dirty protective grill on fan must be cleaned with a dry brush

4.5 Disposal

In accordance to the WEEE-2002/96/EG-Guidelines we take old devices and accessories back for professional disposal, if the transport costs are taken over by the sender.
Send the devices to:

Beckhoff Automation GmbH
Eiserstr. 5
D-33415 Verl

5 Package

5.1 Package supplied

If you order a AX2500 series amplifier from us, you will receive:

— AX250x or AX251x (master)
— Mating connectors for X0, X1, X3, X6
— Protective cover for the axis-side (required only once per system)
— Assembly and Installation Instructions
— Setup software DRIVE.EXE and online documentation on CD-ROM

or

— AX252x (axis module)
— Mating connector for X3, X6
— Short-form instructions

The mating SubD connectors are not part of the package supplied!

Accessories: (must be ordered separately if required)

— Electrical add-on fan (for max. 2 axes, required for AX25x6)
— Synchronous servomotor (linear or rotary)
— Motor lead (pre-assembled), or motor cable as cut-off length + loose connectors (motor- and amplifier-side)
— Feedback cable (pre-assembled) or both feedback connectors, loose with feedback cable as cut-off length
— External regen resistor BAR(U)
— Communication cable to PC (⇨ p.67) for parameterizing the master and any attached axis modules
— Power cable, control cables, fieldbus cables (as lengths)

5.2 Nameplate

The nameplate depicted below is attached to the side of the servo amplifier.

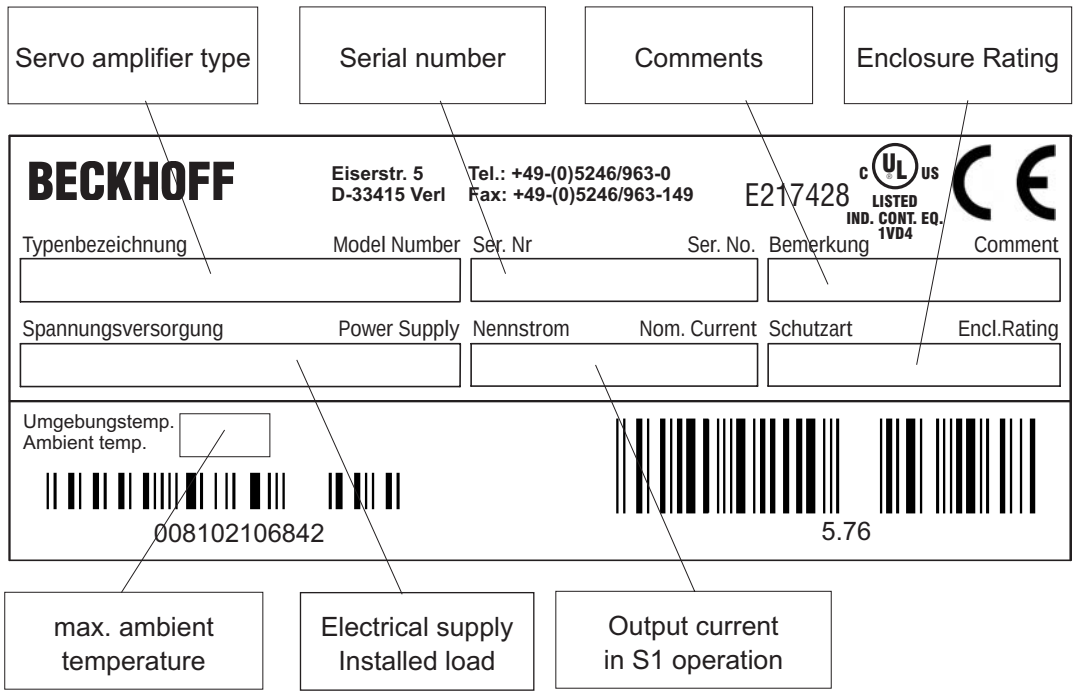

5.3 Part number scheme

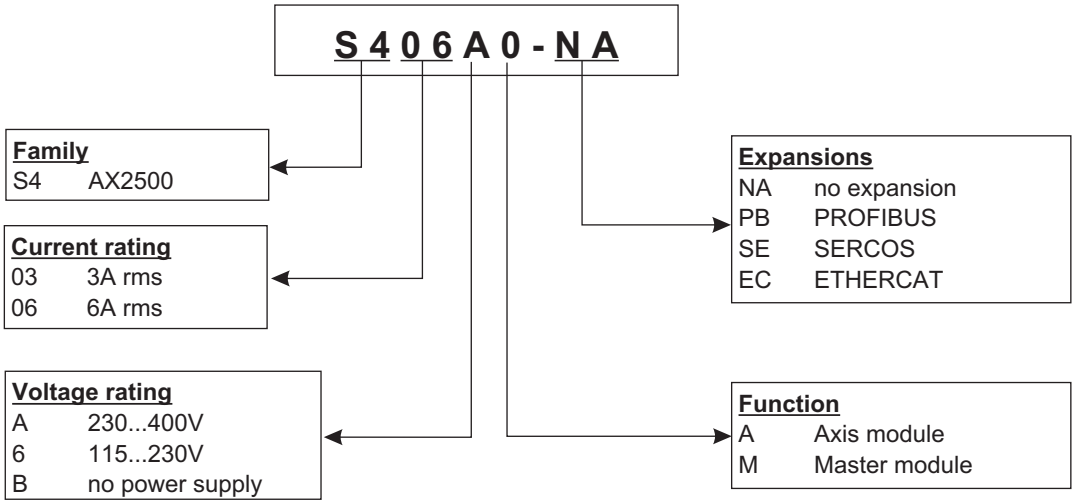

Comparison (without expansion) device name -> UL part number

Device Name	UL Part Number
AX2503	S4036M-NA
AX2506	S4066M-NA
AX2513	S403AM-NA
AX2516	S406AM-NA
AX2523	S403BA-NA
AX2526	S406BA-NA

6 Technical description

6.1 Digital servo amplifiers in the series AX2500

Minimum complexity

- up to 8 axes in a single system
- only one power supply feed and one auxiliary voltage supply per system
- shield connection directly on the servo amplifier
- all axes in a system can be parameterized through a single interface
- strongly reduced wiring expenditure by modular structure
- simple mechanical structure on DIN rails

Standard version

- 2 supply voltage versions: AX250x up to 3x230VAC and
  AX251x up to 3x400VAC
- one size for the master and axis modules each, see page 35
- analog input
- fieldbus interface is integrated (standard: CANopen)
- RS232 is integrated
- pulse-direction interface is integrated

Supply power

- directly off electrical supply input (master only, B6 rectifier bridge, integral power input filter and inrush circuit):
  1 x 115V AC (AX250x only, unearthed operation is permitted)
  3 x 115V AC (AX250x only, unearthed operation is permitted)
  1 x 230V AC (AX250x only, unearthed operation is permissible)
  3 x 230V AC (all types, unearthed operation is permissible)
  3 x 400V AC (AX251x only, TN-system or TT-system with earthed neutral point)
- fusing (e.g. fusible cutout) provided by the user
- integrated interference suppression filter for the supply input (for category 2)
- integrated interference suppression filter for the 24V auxiliary supply (for category 2)
- all shielding connections directly on the amplifier
- output stage: IGBT module with isolated current measurement
  Clock frequency can be switched from 8 to 16 kHz with ASCII command (with power reduction, please contact our customer support)
- regen circuit: internal regen resistor as standard,
  external regen resistor if required
- DC Bus link voltage: 160...320V DC for AX250x
  320...560V DC for AX251x
  160...560V DC for AX252x

Integrated safety

- safe electrical separation to EN 50178 between the power input / motor connections and the signal electronics, provided by appropriate creepage distances and complete electrical isolation
- Soft-start, overvoltage detection, short-circuit protection, phase-failure monitoring
- temperature monitoring of servo amplifier and motor (when using our motors with our pre-assembled cables)

Auxiliary voltage 24V DC

- electrically isolated via an external 24V DC PSU, e.g. with isolating transformer

Operation and parameter setting

- with the comfortable setup software, via the serial interface of a PC to a single connection for all axes in a system
- station address setting through two keys and a 3-digit LED status display on the master
- fully programmable via RS232 interface

Completely digital control

- digital current controller (space vector pulse-width modulation, 62.5 µs)
- freely programmable digital speed controller (62.5 µs or 250 µs)
- integral position controller, with adaptation possibilities for every application (250 µs)
- integrated pulse direction interface, for connection of a servomotor to a stepper-motor control
- evaluation of the resolver signals or sine/cosine signals from a high-resolution encoder
- encoder emulation (incremental ROD 426-compatible or SSI)

Comfort functions

- 4 programmable digital inputs
  (two are normally defined as limit-switch inputs)
- 2 programmable digital outputs
- freely programmable combinations of all digital signals

Options

- PROFIBUS DP interface instead of CANopen, see page 69
- SERCOS interface instead of CANopen, see page 70
- EtherCat interface instead of CANopen, see page 71

6.2 Technical data

6.2.1 Rated data

		max. 230VAC		max. 400VAC			
		Master AX250		Master AX251		Axis module AX252	
Rated data	**DIM**	**3**	**6**	**3**	**6**	**3**	**6**
Rated supply voltage	V~	1 x 115V$_{-10\%}$ to 3 x 230V$^{+10\%}$		3 x 230V$_{-10\%}$ to 3 x 400V$^{+10\%}$		—	
Max. installed load for S1 operation (in a multi-axis system)	kVA	7		12		—	
Rated DC Bus link voltage	V=	160 - 320		320 - 560		160 - 560	
Rated output current (rms value, ± 3%, @ 8kHz)	Arms	3	6*	3	6*	3	6*
Peak output current (max. ca. 5s, ± 3%, @ 8kHz)	Arms	9	12*	9	12*	9	12*
Clock frequency of output stage	kHz	8 (can be switched to 16, with power reduction, please contact our customer support)					
Overvoltage switch-off threshold	V	450		750		—	
maximum load inductance	mH	75	40	75	40	75	40
minimum load inductance	mH	12	7.5	12	7.5	12	7.5
Form factor of the output current (rated conditions and min. load inductance)	—	1.01					
Bandwidth of subordinate current controller	kHz	> 1.2					
Residual voltage drop at rated current	V	< 5					
Quiescent dissipation, output stage disabled	W	12	15	12	15	12	15
Dissipation at rated current (without regen dissipation)	W	35	60	35	60	30	40
Mechanical							
Weight	kg	3				1.7	
Height, without connectors	mm	230	267*	230	267*	230	267*
Width	mm	100				50	
Depth, without connectors	mm	240					

* with add-on ventilation, see page 36

6.2.2 Inputs / Outputs

Analog input, 14-bit resolution	V	±10
common-mode voltage max.	V	±10
Digital control inputs	V	low 0...7V, high 12...36V, 7mA
Digital control outputs, open emitter	V	max. 30V, 10mA
BTB/RTO output, relay contacts	V	DC max. 30, AC max 42
	mA	500
Auxiliary supply, electrically isolated, without holding brake, without fan	V	20 - 30
	A	n * 0.5
Auxiliary supply, electrically isolated, with holding brake or fan (check voltage drop !)	V	24 (-0% +15%)
	A	n * 2,5
Min./max. output current for holding brake	A	0.15 / 1.5
Connections		
Control signals	—	Combicon spring terminal
Power supply	—	Power Combicon
Motor	—	Combicon
Resolver input	—	SubD 9pol. (socket)
Incremental encoder input	—	SubD 15pol. (socket)
PC interface	—	SubD 9pol. (plug)
Encoder emulation, ROD/SSI	—	SubD 9pol. (plug)

n= number of axes

6.2.3 Recommended tightening torques

Connector	Tightening torque
X1, X3, X6	0.3 Nm
X0	1.3 Nm
Earthing bolts	3.5 Nm
lower mounting bolt	3.5 Nm

6.2.4 Fusing

Internal fusing

Function	
Auxiliary supply 24V	20 AM
Regen resistor	electronical

External fusing

Function		Fusible cutouts or similar
AC supply	$F_{N1/2/3}$	16 A slow
24V supply	$F_{H1/2}$	20 A slow
Regen resistor	$F_{B1/2}$	6 A slow

6.2.5 Ambient conditions, ventilation, mounting position

Storage, transport	⇨ p.13
Supply voltage tolerances main power AX250x AX251x auxiliary supply w/o brake and w/o fan with brake or with fan	 min 1x115V$_{-10\%}$ AC / max 1x230V$^{+10\%}$, 50/60 Hz min 3x115V$_{-10\%}$ AC / max 3x230V$^{+10\%}$, 50/60 Hz min 3x230V$_{-10\%}$ AC / max 3x400V$^{+10\%}$, 50/60 Hz 20 VDC ... 30 VDC 24 VDC (-0% +15%), check voltage drop
Ambient temperature in operation	0...+45°C at rated conditions +45...+55°C with power derating 2.5% / K
Humidity in operation	rel. humidity 85%, no condensation
Site altitude	up to 1000m amsl without restrictions 1000...2500m amsl with derating 1.5% / 100m
Pollution level	Pollution level 2 as per EN 60204 / EN 50178
Vibrations	Class 3111 according to IEC 721-3-3
Noise emission	max. 45 dB(A)
Enclosure protection	IP 20
Mounting position	normally vertical ⇨ p.34
Ventilation	AX25x3: free convection AX25x6: add-on fan (⇨ p.36)
Make sure that there is adequate forced ventilation in the closed control cabinet.	

WARNING !

6.2.6 Conductor cross-sections

Technical requirements to cables ⇨ p.41.
Following EN 60204-1, we recommend :

AC connection	1.5 mm², depending on the system fusing
Motor cables, max. 25m	1 mm², shielded, capacitance <150pF/m
Resolver, motor thermostat, max.100m	4x2x0.25 mm², twisted pairs, shielded, capacitance <120pF/m
Encoder, motor thermostat, max. 50m	7x2x0.25 mm², twisted pairs, shielded, capacitance <120pF/m
Analog signals	0.25 mm² , twisted pairs, shielded
Control signals, BTB, DGND	0.5 mm²
Holding brake (motor)	0.75 mm², shielded, check voltage drop
+24 V / XGND	max. 2.5 mm² **Check voltage drop and total current!**

WARNING !

To reach the max. permitted cable length, observe cable requirements ⇨ p. 41.

6.3 LED display

A 3-digit LED display indicates the amplifier status after switching on the 24V supply (⇨ p.89).

6.4 Control for motor holding brake

A motor holding brake (24V, max.1.5 A) can be controlled directly by the servo amplifier.

Check voltage drop, measure the voltage at brake input and check brake function (brake and no brake).
This function does not ensure personnel safety!

The brake function must be enabled through the BRAKE parameter (on the screen page for *Motor*): the setting is *WITH*.
In the diagram below you can see the timing and functional relationships between the ENABLE signal, speed setpoint, speed and braking force.

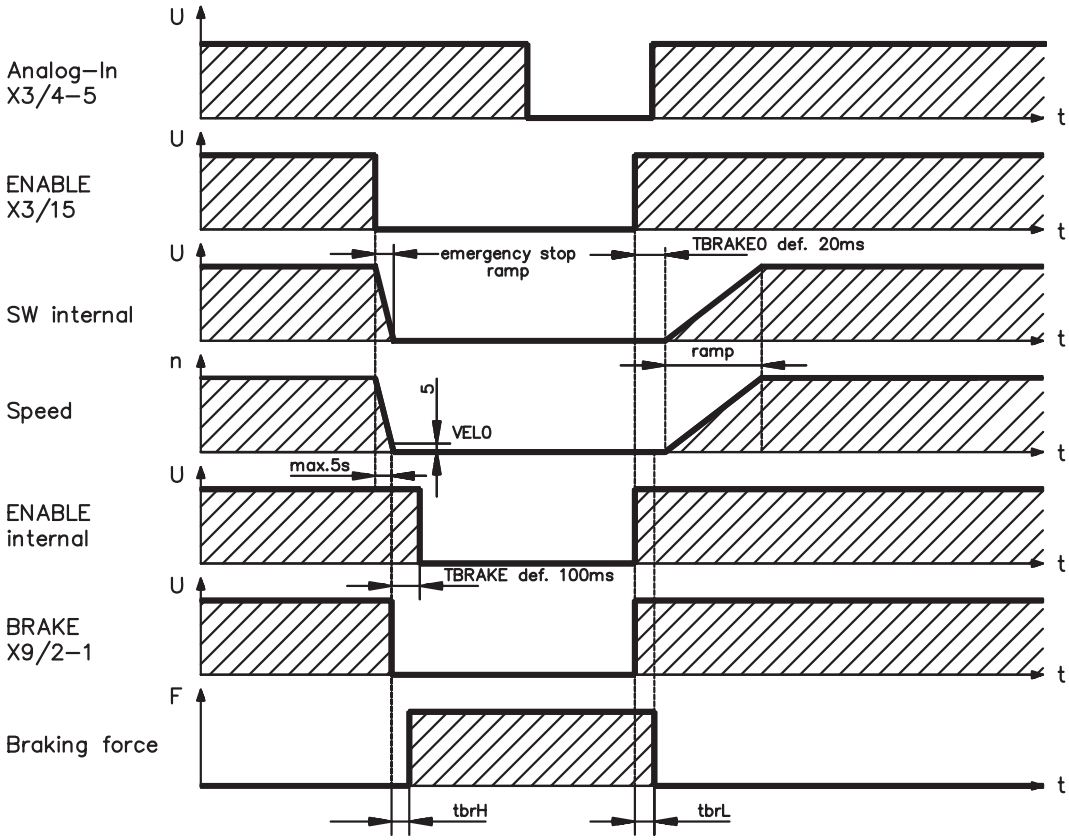

During the internal enable delay time of 100 ms (DECDIS) the speed setpoint of the servo amplifier is internally driven down a 10 ms ramp to 0. The brake output is switched on when a speed of 5 rpm is reached, at the latest after 5s (EMRGTO).
The rise (f_{brH}) and fall (f_{brL}) times of the holding brakes that are built into the motors vary for the different types of motor (see motor manual). A description of the interface can be found on page 48.

Personnel-safe operation of the holding brake requires an additional “make” contact in the brake circuit and a spark suppressor device (e.g. a varistor) in the recommended brake circuit:

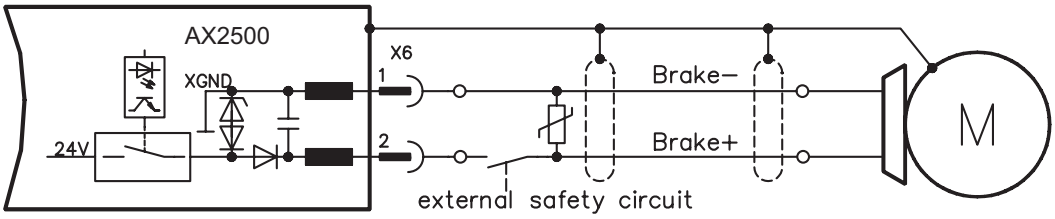

6.5 Grounding system

AGND – ground reference for analog signals, internal analog ground
DGND – ground reference for digital signals and auxiliary supply voltage, optically isolated
PGND — ground reference for position output
The electrical isolation is indicated in the block diagram (⇨ p.43).

6.6 Regen circuit

During braking with the aid of the motor, energy is fed back to the servo amplifier. This energy is converted into heat in the regen resistor. The regen resistor is switched in and out by the regen circuit. The switching thresholds for the regen circuit are adjusted to suit the supply voltage with the aid of the setup software.
Our customer support can help you with the calculation of the regen power which is required. A description of the interface can be found on page 48 .

Internal regen resistor 33 Ω
External regen resistor 33 Ω

Functional description

The regen circuit starts to respond when the DC Bus link voltage reaches the set value. If the energy which is fed back from the motor, as an average over time or as a peak value, is higher than the preset regen power, then the servo amplifier will output the status *regen power exceeded* and the circuit will be switched off.

At the next internal check of the DC Bus link voltage (after a few milliseconds) an overvoltage will be detected and the servo amplifier will be switched off, with the error message *overvoltage* (⇨ p.90).
The BTB/RTO contact (terminals X1/1,2) will be opened simultaneously (⇨ p.66).

Technical data

Supply voltage	Rated data	DIM	Value
3 x 230 V	Upper switch-on threshold for regen circuit	V	400
	Switch-off threshold for regen circuit	V	380
	Continuous int. power in regen circuit (R_{Bint})	W	55
	Continuous ext. power in circuit (R_{Bext}) max.	kW	0,4
	Pulse power, internal (R_{Bint} max. 1s)	kW	4.8
	Pulse power, external (R_{Bext} max. 1s)	kW	4.8
	External regen resistor	Ω	33
3 x 400 V	Upper switch-on threshold for regen circuit	V	720
	Switch-off threshold for regen circuit	V	680
	Continuous int. power in regen circuit (R_{Bint})	W	80
	Continuous ext. power in circuit (R_{Bext}) max.	kW	0,6
	Pulse power, internal (R_{Bint} max. 1s)	kW	16
	Pulse power, external (R_{Bext} max. 1s)	kW	16
	External regen resistor	Ω	33

6.7 Switch-on/-off behavior

This chapter describes the switch-on and switch-off behavior of the AX25 and the steps required to achieve operational stopping or emergency stop behavior that complies with standards.

The servo amplifier's 24 V supply must remain constant. The ASCII commands ACTFAULT (error response) and STOPMODE (ENABLE signal response) dictate how the drive will behave.

STOPMODE	ACTFAULT	**Behavior** (see also ASCII reference in the online help of the setup software)
0 (default)	**0**	Motor coasts to a standstill in an uncontrolled manner
1	**1 (default)**	Motor is braked in a controlled manner

Behavior during a power failure

The servo amplifiers use an integrated circuit to detect if one or more input phases (power supply feed) fail. The behavior of the servo amplifier is set using the setup software: Under "**Response to Loss of Input Phase**" (PMODE) on the **Basic Setup** screen, select:

- **Warning** if the higher-level control system is to bring the drive to a standstill: Warning n05 is output if an input phase is missing, and the motor current is limited to 4 A. The servo amplifier is not disabled. The higher-level control system can now selectively end the current cycle or start bringing the drive to a standstill. Therefore, the error message "MAINS BTB, F16" is output on a digital output of the servo amplifier and evaluated by the control system, for instance.
- **Error message** if the servo amplifier is to bring the drive to a standstill: Error message F19 is output if an input phase is missing. The servo amplifier is disabled and the BTB contact opens. Where the factory setting is unchanged (ACTFAULT=1), the motor is braked using the set "EMERGENCY STOP RAMP".

Behavior when undervoltage threshold is reached

If the undervoltage threshold is undershot in the DC bus link (the threshold value depends on the type of servo amplifier), the error message "UNDERVOLTAGE, F05" is displayed. The drive response depends on the ACTFAULT/STOPMODE setting.

Behavior with enabled "holding brake" function

Servo amplifiers with an enabled holding brake function have a special procedure for switching off the output stage (⇨ p. 21). Removing the ENABLE signal triggers electrical braking.

As with all electronic circuits, the general rule applies that there is a possibility of the internal "holding brake" module failing. Bringing a motor to a standstill using a holding brake in a way that is personnel safe also requires an electromechanical "make" contact for the holding equipment and a suppressor device for the brake.

6.7.1 Behavior in standard operation

The behavior of the servo amplifier always depends on the current setting of a number of different parameters (e.g., ACTFAULT, VBUSMIN, VELO, STOPMODE, etc.; see online help). The diagram below illustrates the correct functional sequence for switching the servo amplifier on and off.

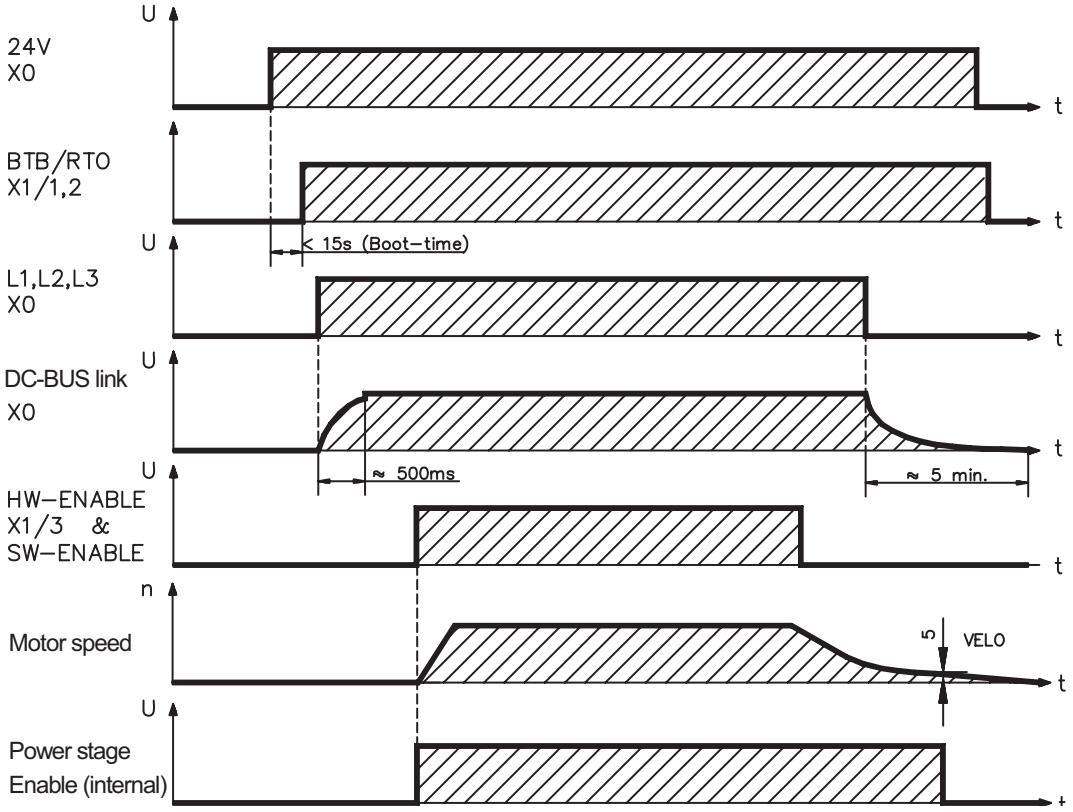

Devices which are equipped with a selected “Brake” function use a special sequence for switching off the output stage (⇨ p.21).

6.7.2 Behavior in the event of an error (with standard setting)

The behavior of the servo amplifier always depends on the current setting of a number of different parameters (e.g., ACTFAULT, VBUSMIN, VELO, STOPMODE, etc.; see online help). The diagram shows the startup procedure and the procedure that the internal control system follows in the event of one or more electrical supply phases failing, assuming that the standard parameter settings apply.

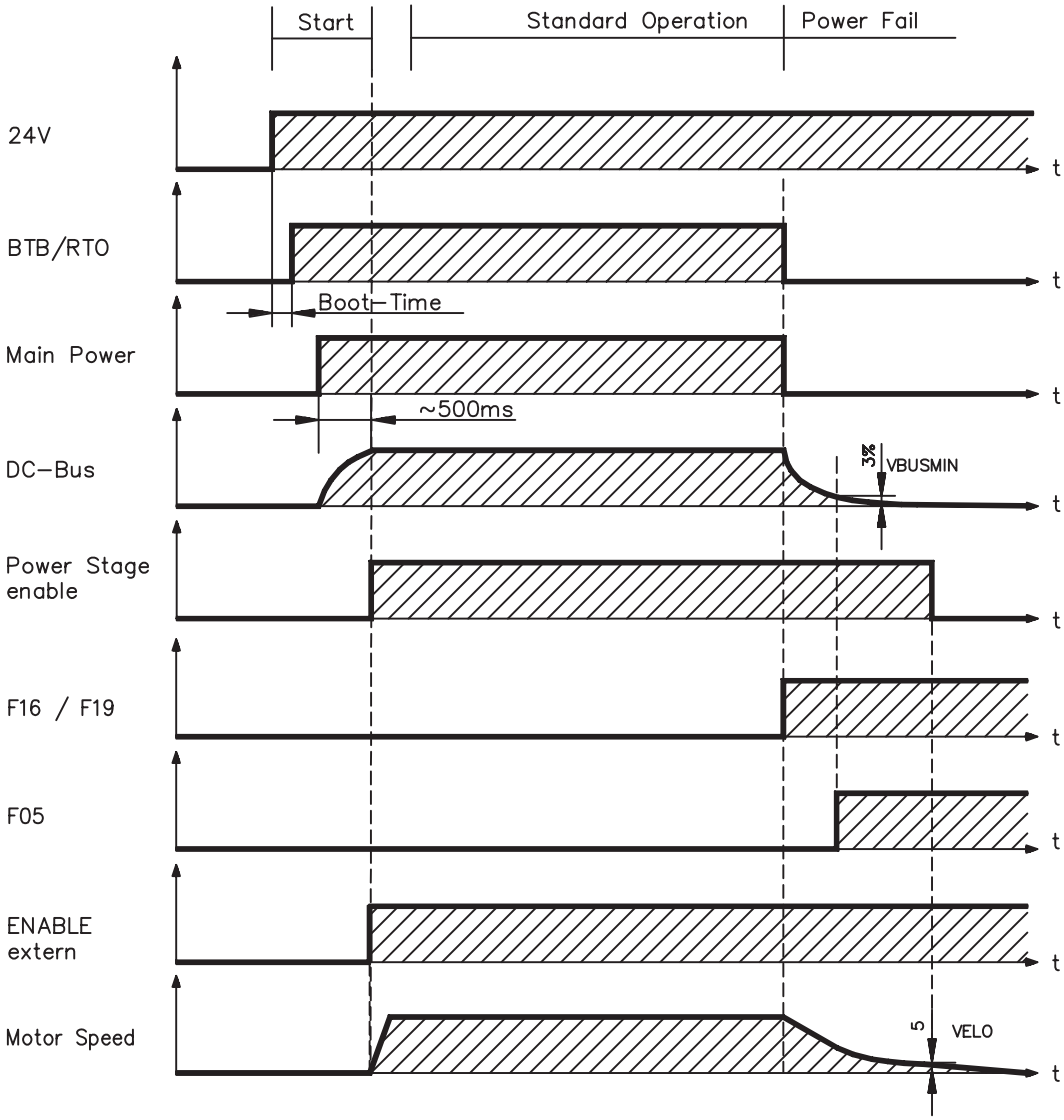

(F16/F19 = error messages Mains BTB /input phase, F05 = error message Undervoltage)

Even if there is no intervention from an external control system (in the example, the ENABLE signal remains active), the motor is immediately braked using the emergency stop ramp if an input phase error is detected and assuming that no changes have been made to the factory setting (ACTFAULT=1).

6.8 Stop / Emergency Stop Function to EN 60204

6.8.1 Stop: Standards

The Stop function is used to shut down the machine in normal operation. The Stop functions are defined by EN 60204 (VDE 0113), paragraphs 9.2.2 and 9.2.5.3.

Category 0: Shut-down by immediate switching-off of the energy supply to the drive machinery (i.e. an uncontrolled shut-down);

Category 1: A controlled shut-down , whereby the energy supply to the drive machinery is maintained to perform the shut-down, and the energy supply is only interrupted when the shut-down has been completed;

Category 2: A controlled shut-down, whereby the energy supply to the drive machinery is maintained.

WARNING !

The parameters “STOPMODE” and “ACTFAULT” must be set to 1 in order to implement the stop categories. If necessary, change the parameters via the terminal screen of the setup software and store the data in the EEPROM.

The Stop Category must be determined by a risk evaluation of the machine. In addition, suitable means must be provided to guarantee a reliable shut-down.

Category 0 and Category 1 Stops must be operable independently of the operating mode, whereby a Category 0 Stop must have priority. Stop functions must be implemented by **disconnection** of the appropriate circuitry, and have priority over assigned start functions.

If necessary, provision must be made for the connection of protective devices and lock-outs. If applicable, the Stop function must signal its status to the control logic. A reset of the Stop function must not create a hazardous situation.

6.8.2 Emergency Stop: Standards

The emergency Stop function is used for the **fastest possible shut-down** of the machine in a dangerous situation. The Emergency Stop function can be triggered by the actions of a single person. It must be fully functional and available at all times. The user must not have to work out how to operate this mechanism. The Emergency Stop function is defined by EN 60204 (VDE 0113), paragraph 9.2.5.4.

In addition to the requirements for Stop, the emergency Stop must fulfil the following requirements:

- emergency stop must have priority over all other functions and controls in all operating situations.
- the energy supply to any drive machinery that could cause dangerous situations must be switched off as fast as possible, without causing any further hazards (e.g. by using mechanical latching devices that do not require an external supply of energy, by counter-current braking in Stop Category 1).
- the reset must not initiate a restart.

If necessary, provision must be made for the additional connection of emergency stop devices (see EN 60204, "Requirements for emergency stop devices"). The Emergency Stop must be effective as a stop of either Category 0 or Category 1.
The Emergency Stop Category must be determined by a risk evaluation of the machine.

Category 0

Only hard-wired, electromechanical components may be used for the Category 0 Emergency Stop function. It must not be triggered using switching logic (hardware or software), by transferring commands via a communication network, or via a data link.
The drive must be shut down using an electromechanical circuit. If the connected servo motor has an integrated brake, this must always be controlled by an electromechanical circuit as well.

Category 1

With the Category 1 Emergency Stop function, there must be absolute certainty in terms of the power supply for the machine drives being switched off (i.e., secured) using electromechanical components. Additional Emergency Stop equipment may be connected. Bringing the motor to a standstill by interrupting the mains supply and using controlled electronic braking. The 24 V supply for the servo amplifier must remain constant. The issue of which circuit should be used is highly dependent on the requirements of the application at hand.

Usually a brake in a servo motor only has the function of a holding brake. To ensure an emergency stop function, the braking torque that is required must be checked. If the holding brake fulfills the dynamic requirements, it must be taken into acount that this application will cause increased wear.

WARNING !

The parameters “STOPMODE” and “ACTFAULT” must be set to 1 in order to implement the stop categories. If necessary, change the parameters via the terminal screen of the setup software and store the data in the EEPROM.

6.8.3 Implementation of the Stop Category 0

Bringing the motor to a standstill by immediately switching off the amplifier power supply (**STOPMODE & ACTFAULT parameters set to 1**). The switching sequence is unambiguously fixed by the circuit, and must be followed, to prevent undesirable error signals and failure of the servo amplifier.

It is not possible to achieve a Category 0 shut-down with the servo amplifier alone, since hard-wired electromechanical components are compulsory for this type of disconnection. A brake that is built into the motor must have an additional electromechanical control circuit, as well as the control through the AX25xx, in order to meet Category 0.

Normally, a brake in a servo motor only has the function of a holding brake. To ensure an emergency stop function, the braking torque that is required must be checked. If the holding brake fulfills the dynamic requirements, it must be taken into acount that this application will cause increased wear.

Circuit suggestion
(with EMERGENCY STOP Category 0, control function with contactor relays)

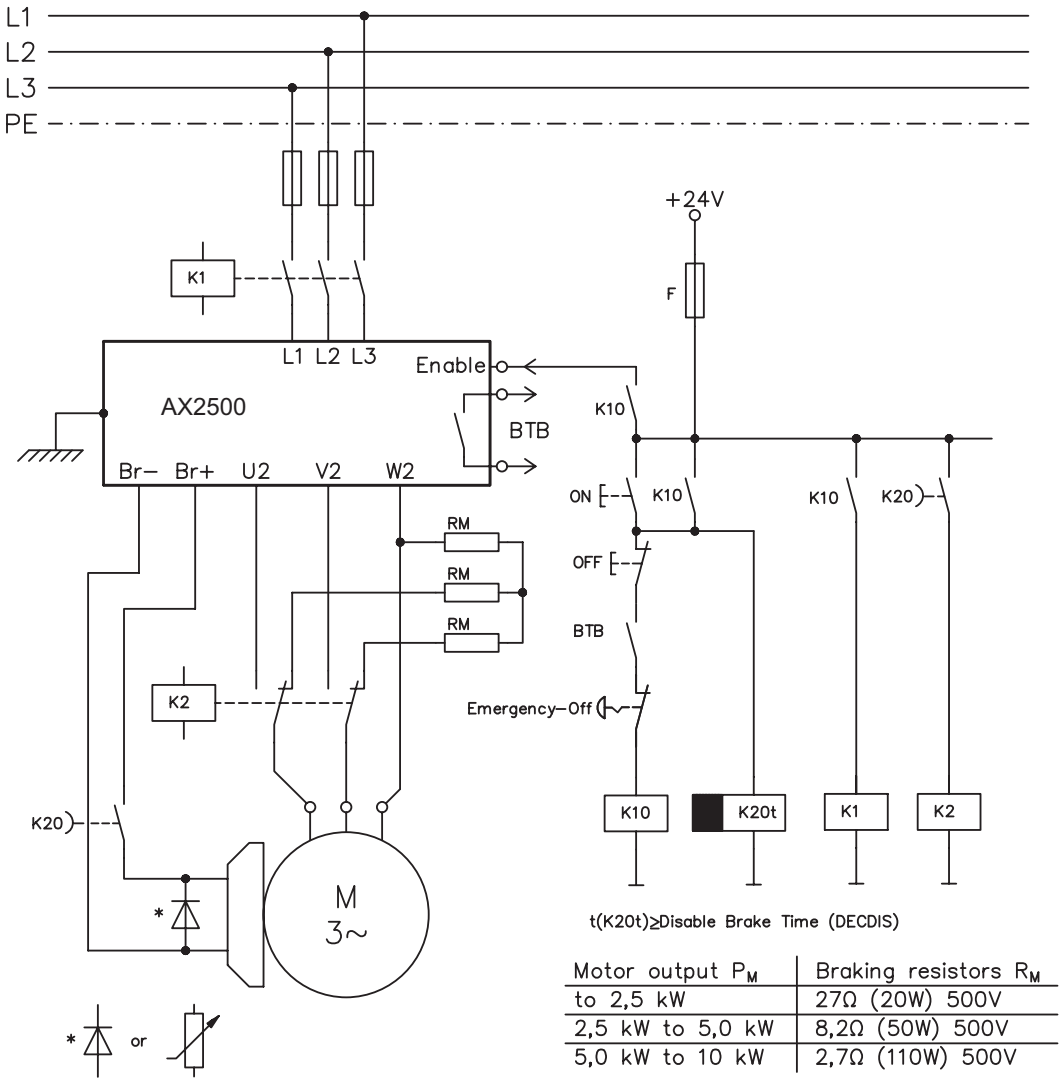

Motor output P_M	Braking resistors R_M
to 2,5 kW	27Ω (20W) 500V
2,5 kW to 5,0 kW	8,2Ω (50W) 500V
5,0 kW to 10 kW	2,7Ω (110W) 500V

$$P_M = \frac{M_0 * n_n}{9550}$$

P_M : Motor output [kW]
M_0 : Stall torque [Nm]
n_n : Rated speed [$^1/_{min}$]

6.8.4 Implementation of the Stop Category 1

Bringing the motor to a standstill by interrupting the mains supply and using controlled electronic braking (**STOPMODE & ACTFAULT parameters set to 1**). The 24 V supply for the AX2500 must remain constant.

The drive is braked in a controlled manner during the stopping (disabling) procedure. If the speed VEL0 (see sequence diagram in chapter 6.4) is undershot, the holding brake is applied and the output stage is disabled.

As soon as two separate time periods (set at the time relay) have elapsed, the mains supply and the holding brake are electrically isolated.

WARNING !

Should an internal AX2500 fault occur, the motor is forced to a standstill once K20 drops out.

Circuit suggestion
(with EMERGENCY STOP Category 1, control function with contactor relays)

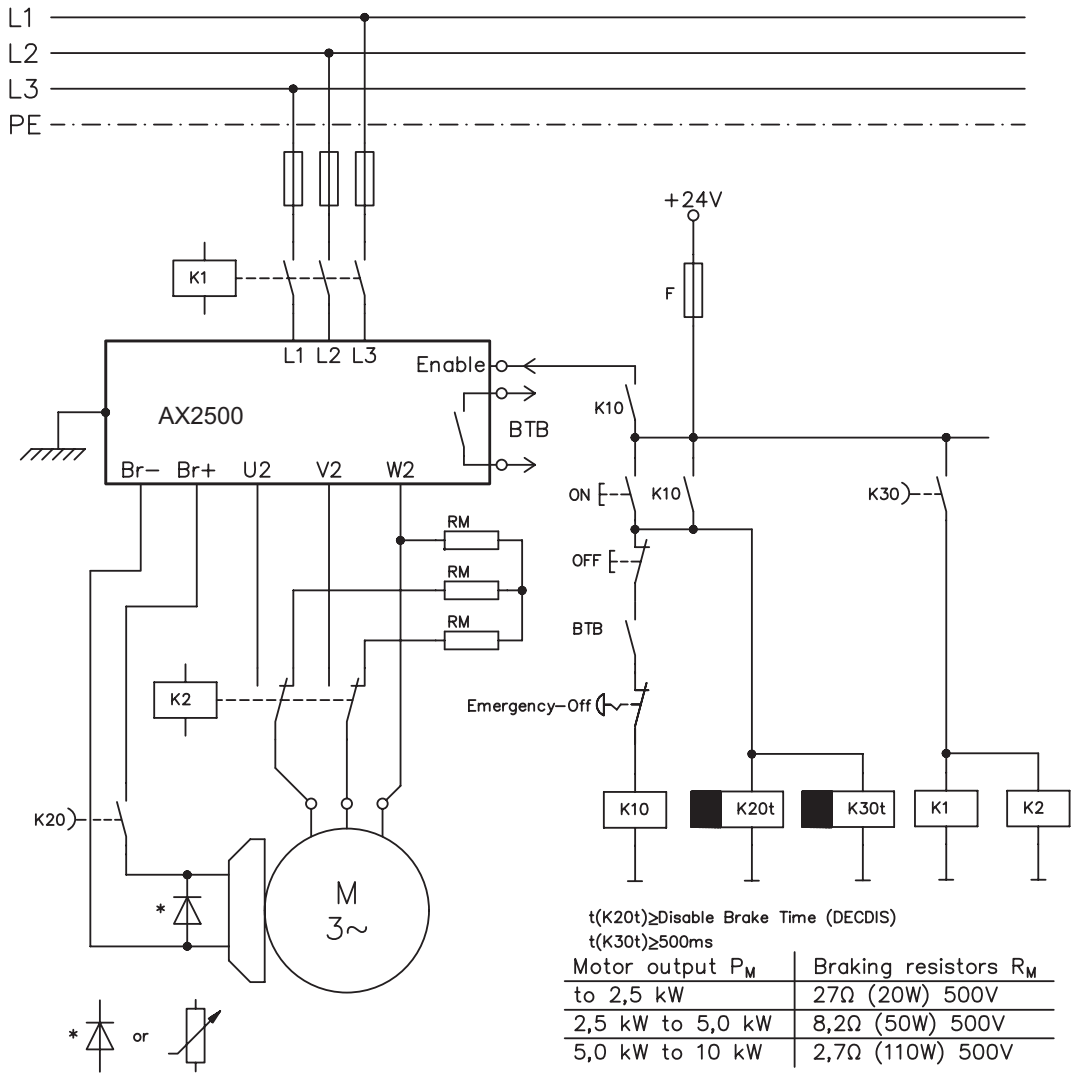

Motor output P_M	Braking resistors R_M
to 2,5 kW	27Ω (20W) 500V
2,5 kW to 5,0 kW	8,2Ω (50W) 500V
5,0 kW to 10 kW	2,7Ω (110W) 500V

$$P_M = \frac{M_0 * n_n}{9550}$$

P_M : Motor output [kW]
M_0 : Stall torque [Nm]
n_n : Rated speed [$^1/_{min}$]

6.8.5 Implementation of the Stop Category 2

The machine receives an operational stop (disable) command and brakes the drive using the set braking ramp (**STOPMODE & ACTFAULT parameters set to 1**).

The drive is braked in a controlled manner during the stopping (disabling) procedure. If the speed VEL0 (see sequence diagram in chapter 6.4) is undershot, the holding brake is applied and the output stage is disabled. In this case, there is no interruption of the electrical supply.

If the electrical supply is switched off, not only will the controlled braking procedure be performed, but the mains supply and the holding brake will also be electrically isolated following a time period set at the time relay.

Circuit suggestion
(with EMERGENCY STOP Category 1, control function with contactor relays)

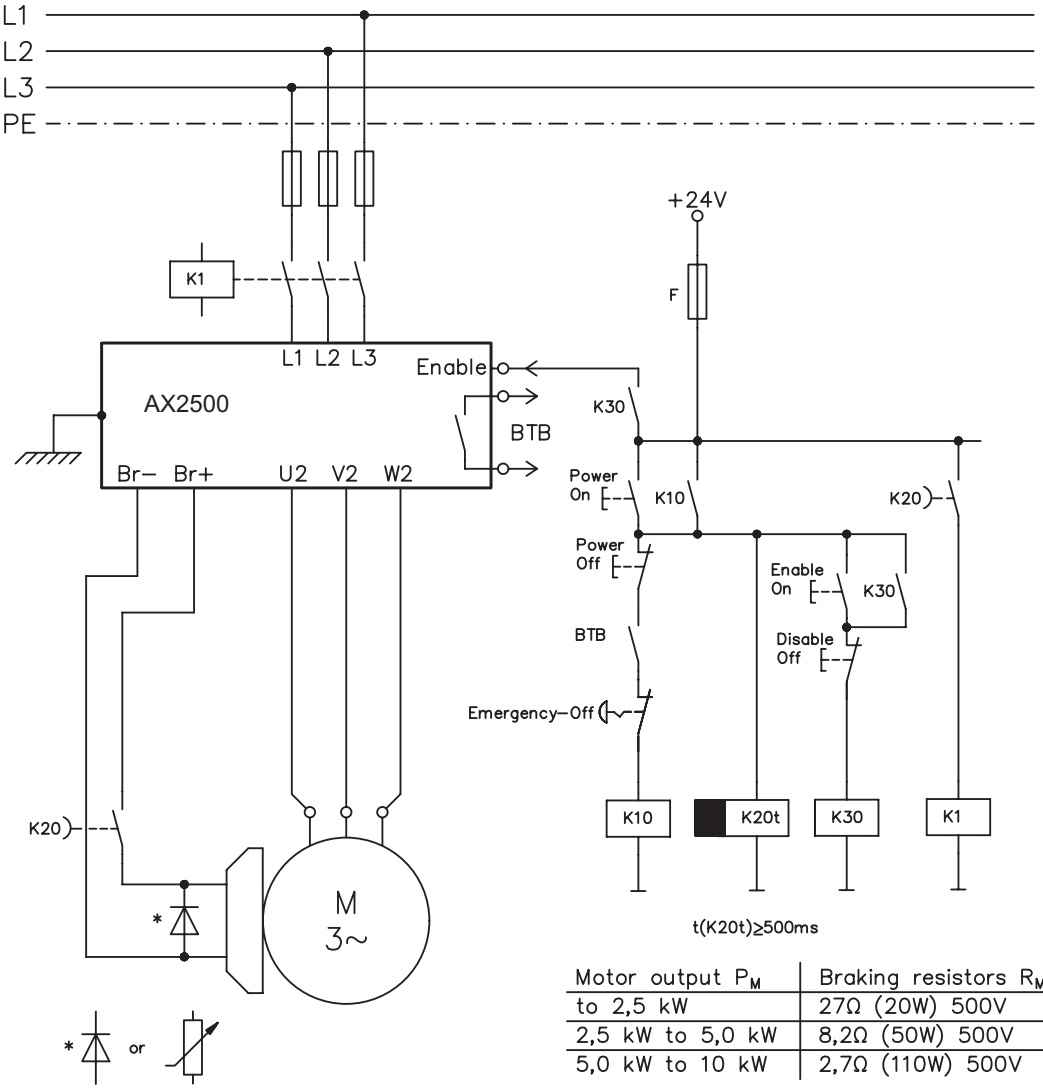

Motor output P_M	Braking resistors R_M
to 2,5 kW	27Ω (20W) 500V
2,5 kW to 5,0 kW	8,2Ω (50W) 500V
5,0 kW to 10 kW	2,7Ω (110W) 500V

$$P_M = \frac{M_0 * n_n}{9550}$$

P_M : Motor output [kW]
M_0 : Stall torque [Nm]
n_n : Rated speed [$^1/_{min}$]

6.9 Shock-hazard protection

6.9.1 Leakage current

Leakage current via the PE conductor results from the combination of equipment and cable leakage currents. The leakage current frequency pattern comprises a number of frequencies, whereby the residual-current circuit breakers definitively evaluate the 50Hz current. For this reason, the leakage current cannot be measured using a conventional multimeter.

As a rule of thumb, the following assumption can be made for leakage current on our low-capacity cables at a mains voltage of 400 V, depending on the clock frequency of the output stage:

I_{leak} = n x 20mA + L x 1mA/m at 8kHz clock frequency at the output stage
I_{leak} = n x 20mA + L x 2mA/m at a 16kHz clock frequency at the output stage
(where Ileak=leakage current, n=number of amplifiers, L=length of motor cable)

At other mains voltage ratings, the leakage current varies in proportion to the voltage.

Example: 2 x servo amplifiers + a 25m motor cable at a clock frequency of 8kHz:
2 x 20mA + 25m x 1mA/m = 65mA leakage current.

Since the leakage current to PE is more than 3.5 mA, in compliance with EN50178 the PE connection must either be doubled or a connecting cable with a cross-section >10mm² must be used. Use the PE terminal X0/3 and the PE bolt in order to fulfil this requirement.

The following measures can be used to minimise leakage currents.
— Reduce the length of the engine cable
— Use low-capacity cables (see p.41)
— Remove external EMC filters (radio-interference suppressors are integrated)

6.9.2 Residual-current circuit breakers (FI)

In conformity with DIN IEC 60364-4-41 – Regulations for installation and EN 60204 – Electrical equipment of machinery, residual-current circuit-breakers (called FI below) can be used provided the requisite regulations are complied with.

The AX2500 is a 3-phase system with a B6 bridge. Therefore, **FIs which are sensitive to all currents** must be used in order to detect any D.C. fault current. Refer to chapter 6.9.1 for the rule of thumb for determining the leakage current.

Rated residual currents in the FI

10 -30 mA	Protection against "indirect contact" (personal fire protection) for stationary and mobile equipment, as well as for "direct contact".
50 -300 mA	Protection against "indirect contact" (personal fire protection) for stationary equipment

Recommendation: In order to protect against direct contact (with motor cables shorter than 5 m) we recommend that each servo amplifier be protected individually using a 30mA residual-current circuit-breaker which is sensitive to all currents.

If you use a selective FI circuit-breaker, the more intelligent evaluation process will prevent spurious tripping of the circuit-breakers.

6.9.3 Isolating transformers

If protection against indirect contact is absolutely essential despite a higher leakage current, or if an alternative form of shock-hazard protection is sought, the AX2500 can also be operated via an isolating transformer.

A ground-leakage monitor can be used to monitor for short circuits.

We would advise you to keep the length of wiring between the transformer and the servo amplifier as short as possible.

7 Mechanical Installation

7.1 Important notes

- Protect the servo amplifier from impermissible stresses. In particular, do not let any components become bent or any insulation distances altered during transport and handling. Avoid contact with electronic components and contacts.
- Ensure that there is an adequate flow of cool, filtered air into the bottom of the control cabinet or use heat exchanger. Note the conditions on page 20.
- Take care that the servo amplifier and motor are properly earthed. Do **not** use painted (non-conductive) mounting plates.
- Don't mount devices, which produce magnetic fields, directly beside the servo amplifier. Strong magnetic fields could directly affect internal components. Install devices which produce magnetic field with distance to the servo amplifiers and/or shield the magnetic fields.
- Not more than 7 axis modules can be connected to a master module.

7.2 Guide to mechanical installation

The following notes should assist you to carry out the mechanical installation in a sensible sequence, without overlooking anything important:

Site	In a closed control cabinet. Observe page 20. The site must be free from conductive or corrosive materials. For the mounting position within the cabinet ⇨ p.34
Ventilation	Check that the ventilation of the servo amplifier is unimpeded and keep within the permitted ambient temperature ⇨ p.20 . Keep the required space clear above and below the servo amplifier ⇨ p.34.
Mounting	Mount the servo amplifier on mounting rails (DIN-rails) on the conductive, **earthed** mounting plate in the control cabinet and mount the necessary add-on fans (⇨ p.36)
Grounding, Shielding	EMC-conform shielding and grounding (⇨ p.45) Earth the mounting plate, motor housing and CNC-GND of the controls. Notes on connection techniques are on page 40

7.3 Mounting

Material: 2 mounting rails to EN60715, min. length = system width + 40mm, make sure there is a conductive connection to the mounting plate

Mount the protective cover (7mm) on the left side of the system.

Tools required: Screwdriver with approx. 5 mm blade width

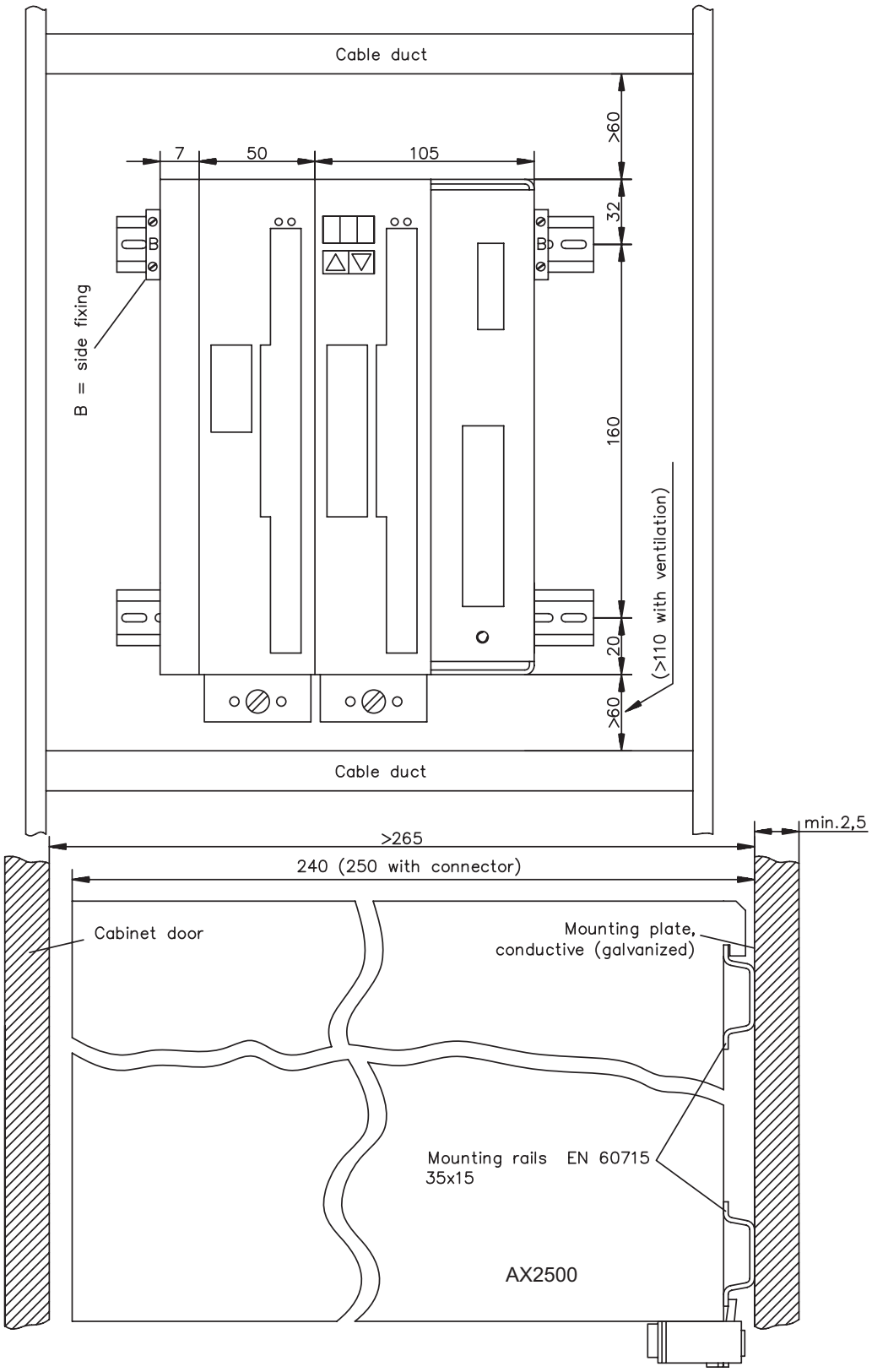

7.4 Dimensions

AX250x and AX251x

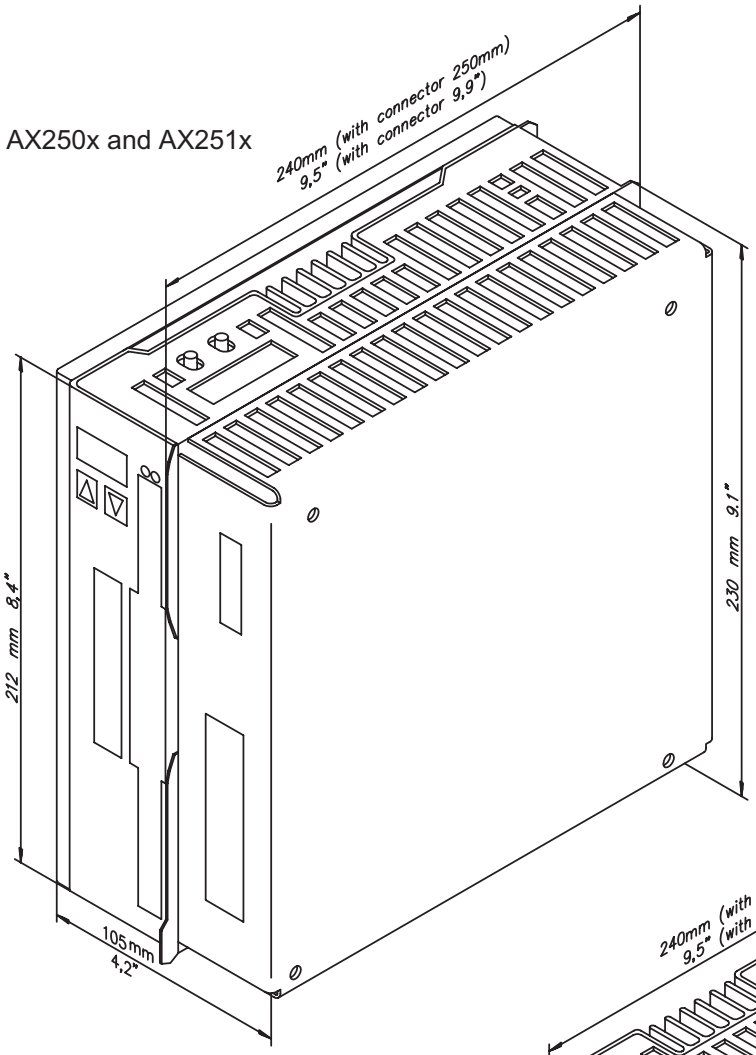

AX252x

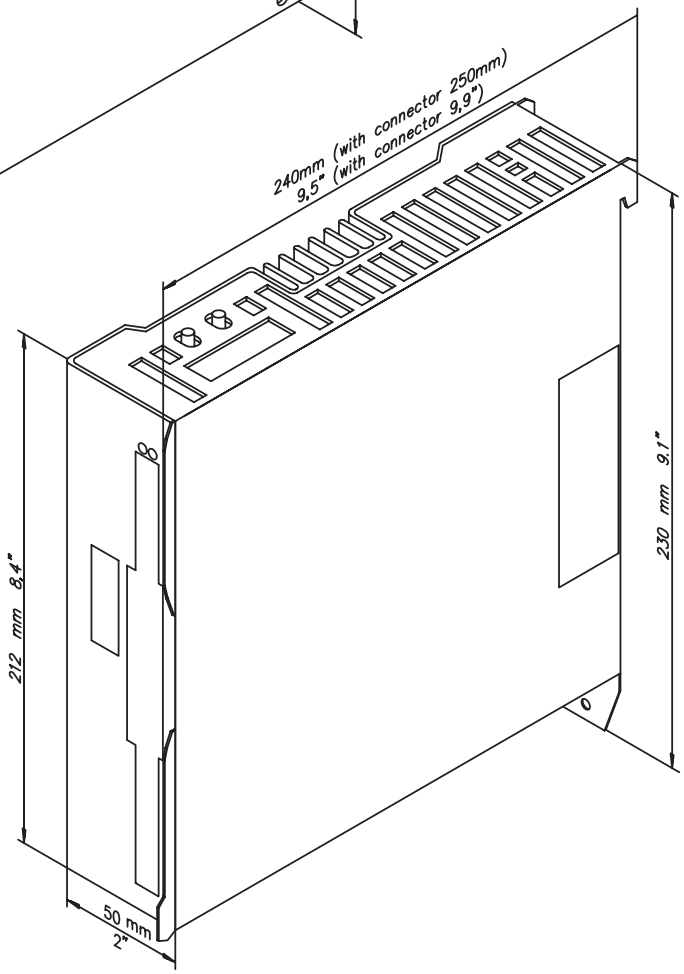

7.5 Add-on fan

Electrical add-on fan for two axes to achieve rated power even under unfavourable ambient conditions, **required for AX25x6**.

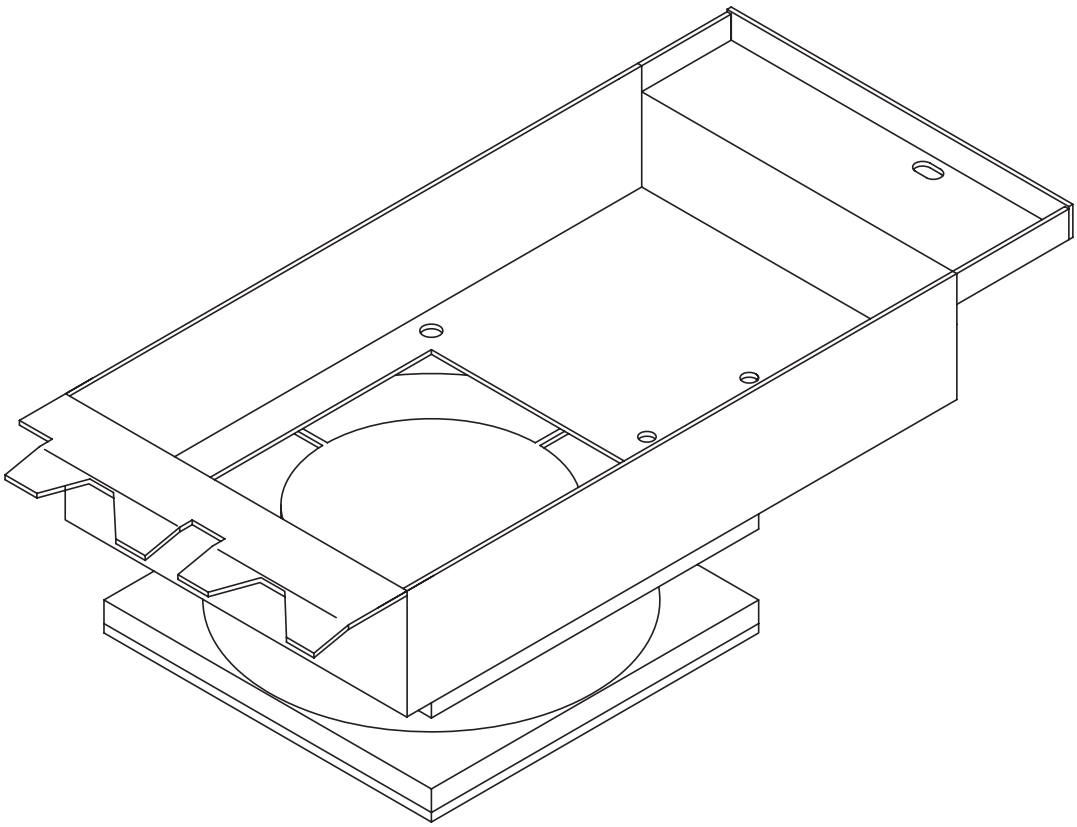

To mount the fan, just hook it in the designated slots at the bottom of the AX2500 and screw the fixing bolt into the thread in the housing. The electrical connection takes place automatically when mounting the fan.

Please consider that a mounted fan increases the required space underneath the amplifier! (⇒ p. 34)

The drawing below shows, how the fan should be mounted. With an odd number of axes (master included), the fan must also cover the power supply unit at the master.

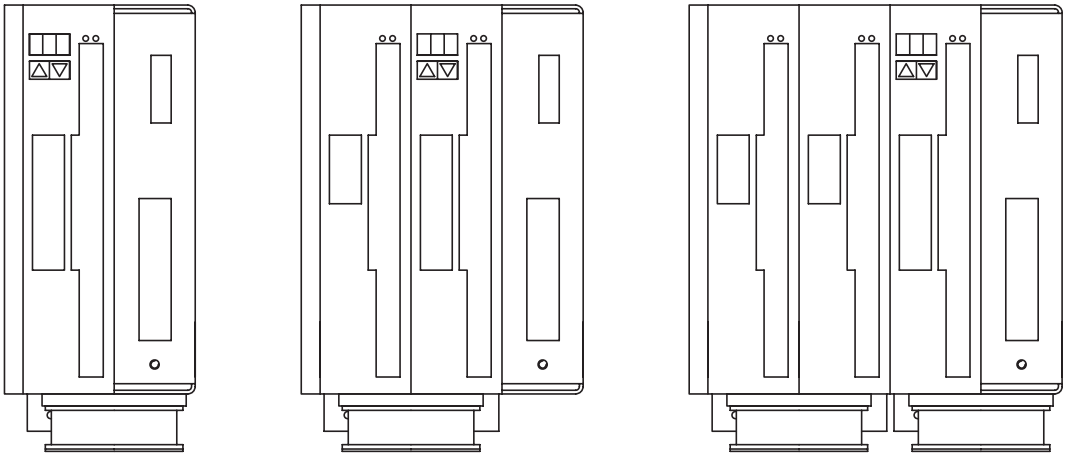

Single master | Master with 1 Axis module | Master with 2 Axis modules

8 Electrical Installation

8.1 Important notes

- Not more than 7 axis modules can be connected to a master module.
- Check the combination of servo amplifier and motor. Compare the rated voltage and current of the units. Carry out the wiring according to the instructions on page 39.
- Make sure that the maximum permissible rated voltage at the terminals for L1, L2, L3 and $+R_{Bext}$, –DC is not exceeded by more than 10%, even in the most unfavourable conditions (see EN 60204-1 Section 4.3.1). An excessive voltage on these terminals can lead to destruction of the regen circuit and the servo amplifier.
  Use the AX251x only on an earthed 3-phase supply system. Use the amplifier only to drive a synchronous servomotor.
- The fusing of the AC supply input and the 24V supply is installed by the user (⇨ p.19).
- Route power and control cables separately. We recommend a separation of at least 20 cm. This improves the interference immunity required by EMC regulations. If a motor power cable is used which includes cores for brake control, **the brake control cores must be separately shielded**. Earth the shielding at both ends (⇨ p.45).
- Install all heavy-current cables with an adequate cross-section, as per EN 60204-1 (⇨ p.20) and use the requested cable material (⇨ p. 41) to reach max. cable length.
- Wire the BTB/RTO contact in series into the safety circuit of the installation.
  Only in this way is the monitoring of the servo amplifier assured.
- Install all shielding with large area (low impedance) connections, with metallised connector housings or shield connection clamps where possible.
  Notes on connection techniques can be found on page 40.
- It is permissible to alter the servo amplifier settings by using the operator software.
  Any other alterations will invalidate the warranty.

Caution
Never disconnect the electrical connections to the servo amplifier while it is live. Residual charges in the capacitors can have dangerous levels up to 300 seconds after switching off the mains supply voltage. Measure the voltage in the DC Bus link ($+R_{Bext}$/-DC) and wait until the voltage has fallen below 40V.
Control and power connections can still be live, even when the motor is not rotating.

8.2 Guide to electrical installation

The following notes should assist you to carry out the electrical installation in a sensible sequence, without overlooking anything important:

Cable selection	Select cables according to EN 60204-1, ⇨ p.20
Grounding, Shielding	EMC-conform shielding and grounding (⇨ p.45) Earth the mounting plate, motor housing and CNC-GND of the controls. Notes on connection techniques are on page 40
Wiring	— **Route power leads separately from control cables** — **Wire the BTB/RTO contact in series into the safety loop** — Connect the digital control inputs to the servo amplifier — Connect up AGND — Connect the analog setpoint, if required — Connect the feedback unit (resolver or encoder) — If required, connect the encoder emulation — If required, connect the fieldbus — Connect the motor cable Connect shielding to EMC connectors at the motor end, and the shielding lug at the amplifier end — Connect motor-holding brake, with shielding to EMC connector at the motor end, and to shielding lug at the amplifier end — If required, connect the external regen resistor (with fusing) — Connect the auxiliary supply (maximum permissible voltages ⇨ p.20) — Connect main power supply (maximum permissible voltages ⇨ p.20) — Connect PC (⇨ p.67).
Check	Make a final check of the wiring carried out against the wiring diagrams that have been used

WARNING !

8.3 Wiring

8.3.1 Important notes

WARNING !

Only professional staff who are qualified in electrical engineering are allowed to install the servo amplifier.

The installation procedure is described as an example. A different procedure may be appropriate or necessary, depending on the application of the equipment.

We provide further know-how through **training courses** (on request).

DANGER !

Caution !
Only install and wire up the equipment when it is not live, i.e. when neither the mains power supply nor the 24 V auxiliary voltage nor the operating voltages of any other connected equipment is switched on.
Take care that the cabinet is safely disconnected (lock-out, warning signs etc.).
The individual voltages will be switched on for the first time during commissioning.

The ground symbol ⏚, which you will find in all the wiring diagrams, indicates that you must take care to provide an electrically conductive connection with the largest possible area between the unit indicated and the mounting plate in the control cabinet. This connection is for the effective grounding of HF interference, and must not be confused with the PE symbol ⏚ (protective earth to EN 60204).

Use the following wiring and connection diagrams :

Overview:	
Master module	**: Page 45**
Axis module	**: Page 46**
Mains power	**: Page 47**
Motor	**: Page 48**
Feedback	**: Page 49ff**
Electronic Gearing / Master Slave	
Master/slave	**: Page 56**
Pulse/direction	**: Page 59**
Encoder emulation:	
ROD (A quad B)	**: Page 61**
SSI	**: Page 62**
Digital&Analog I/Os	**: Page 63ff**
RS232 / PC	**: Page 67**
Fieldbus:	
CAN interface	**: Page 68**
PROFIBUS interface	**: Page 69**
SERCOS interface	**: Page 70**
EtherCAT interface	**: Page 71**
Multiaxis systems	**: Page 87**

8.3.2 Shield connection on the front panel

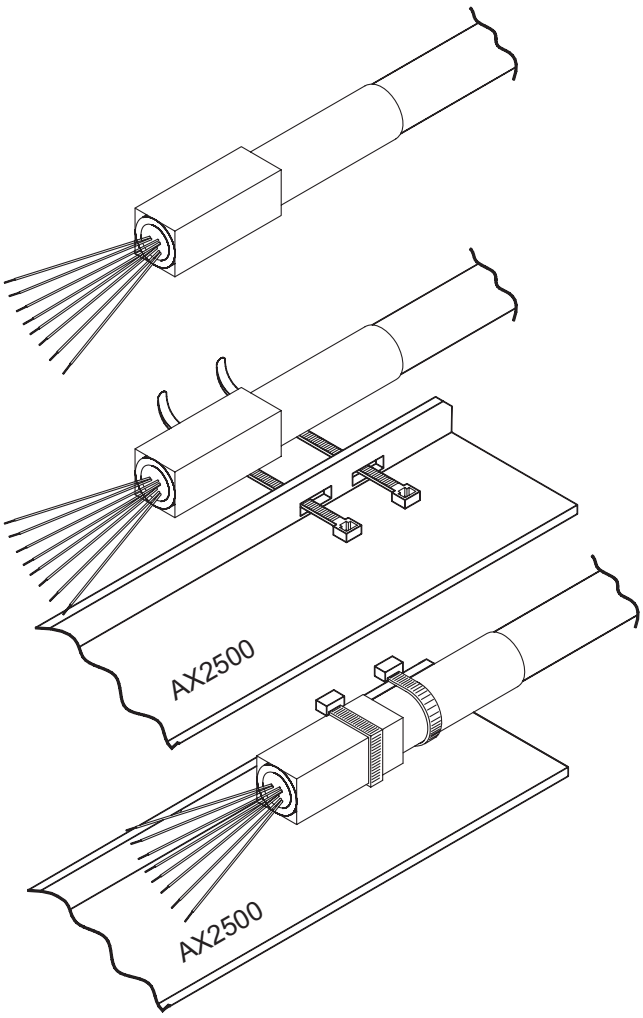

The pre-assembled cables for AX2500 are provided with an overall metal ferrule at the amplifier end that is electrically connected to the shielding.

Thread a cable tie through each slot in the shielding strip (front panel) of the servo amplifier.

Tighten up the cable ties so that the shielding ferrule and the sheathing of the cable is pressed down tightly against the shielding strip.

8.3.3 Requirements to cables

Further information on the chemical, mechanical and electrical characteristics of the cables can be obtained from our customer support.

WARNING !

Observe the restrictions in the chapter "Conductor cross-sections" on page 20. To operate the amplifier with the max. permitted cable length, you must use cable material which meets the requirements on the capacity given below.

Insulation material

Sheathing	PUR (polyurethane, code 11Y)
Core insulation	PETP (polyesteraphthalate, code 12Y)

Capacitance

Motor cable	less than 150 pF/m
RES/encoder cable	less than 120 pF/m

8.4 Components of a servo system

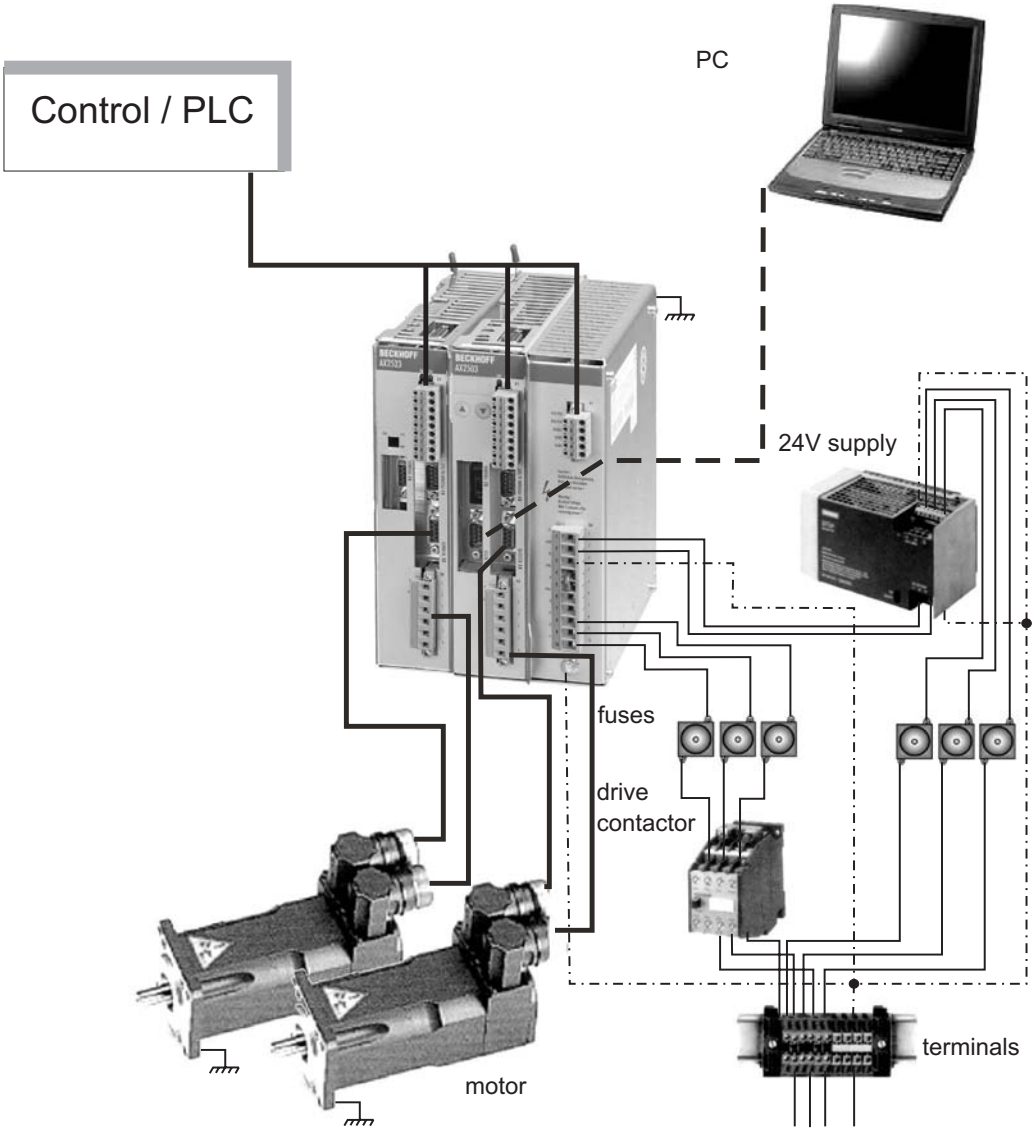

8.5 Block diagram

The block diagram below just provides an overview.

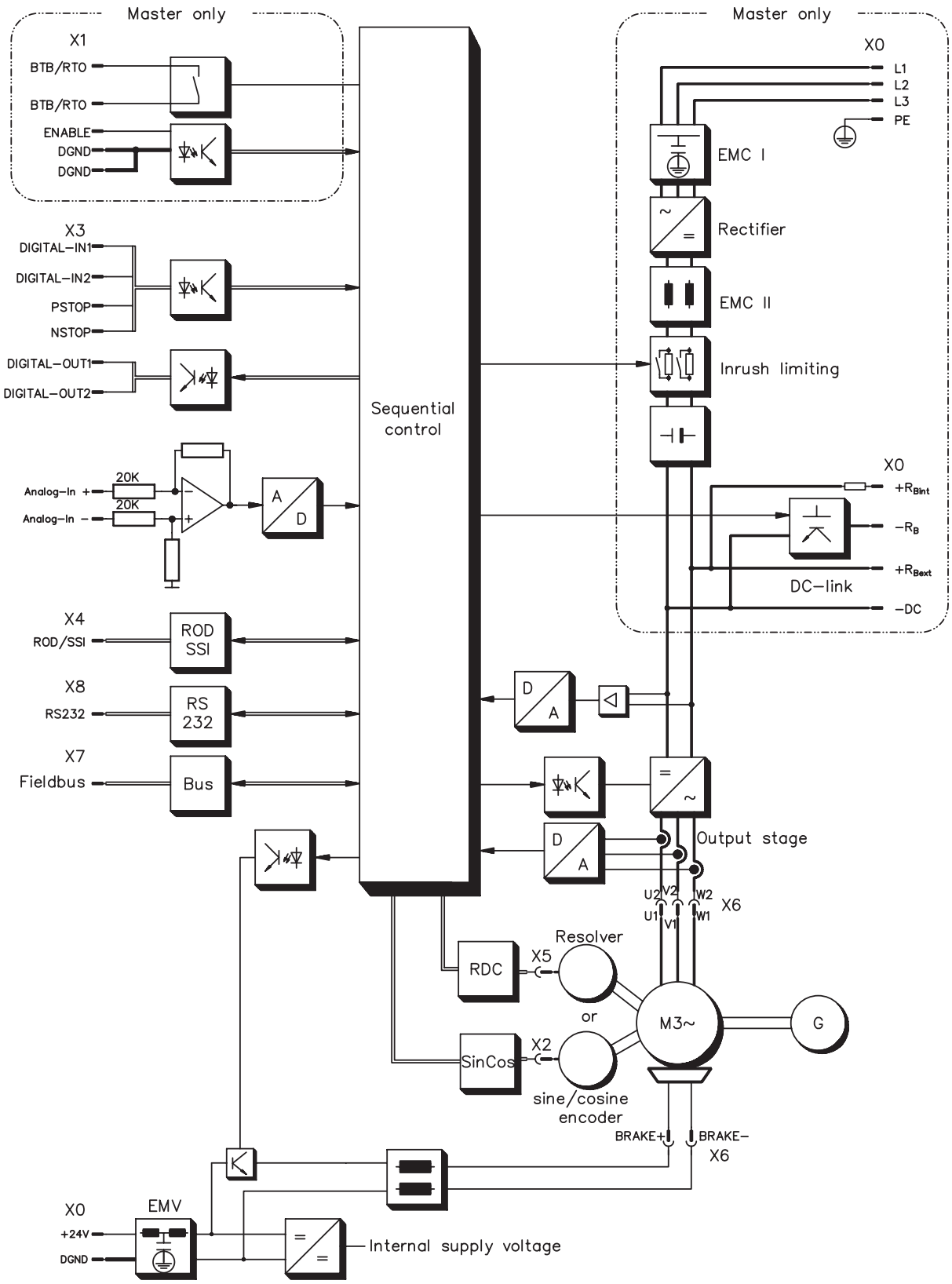

8.6 Connector assignments

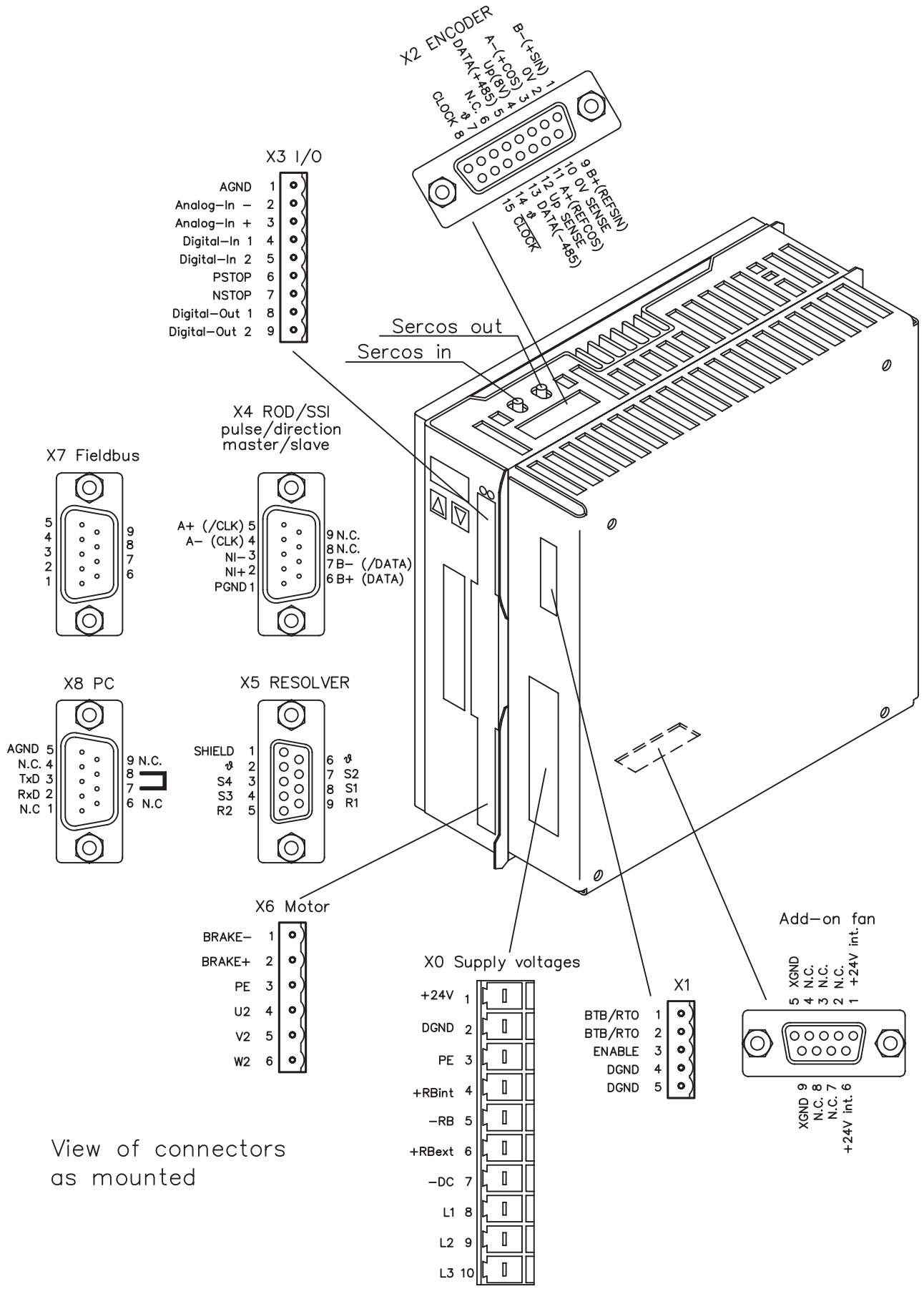

8.7 Connection diagram AX250x and AX251x (overview)

Follow the safety instructions (⇨ p.9) and the use as directed (⇨ p.10) !

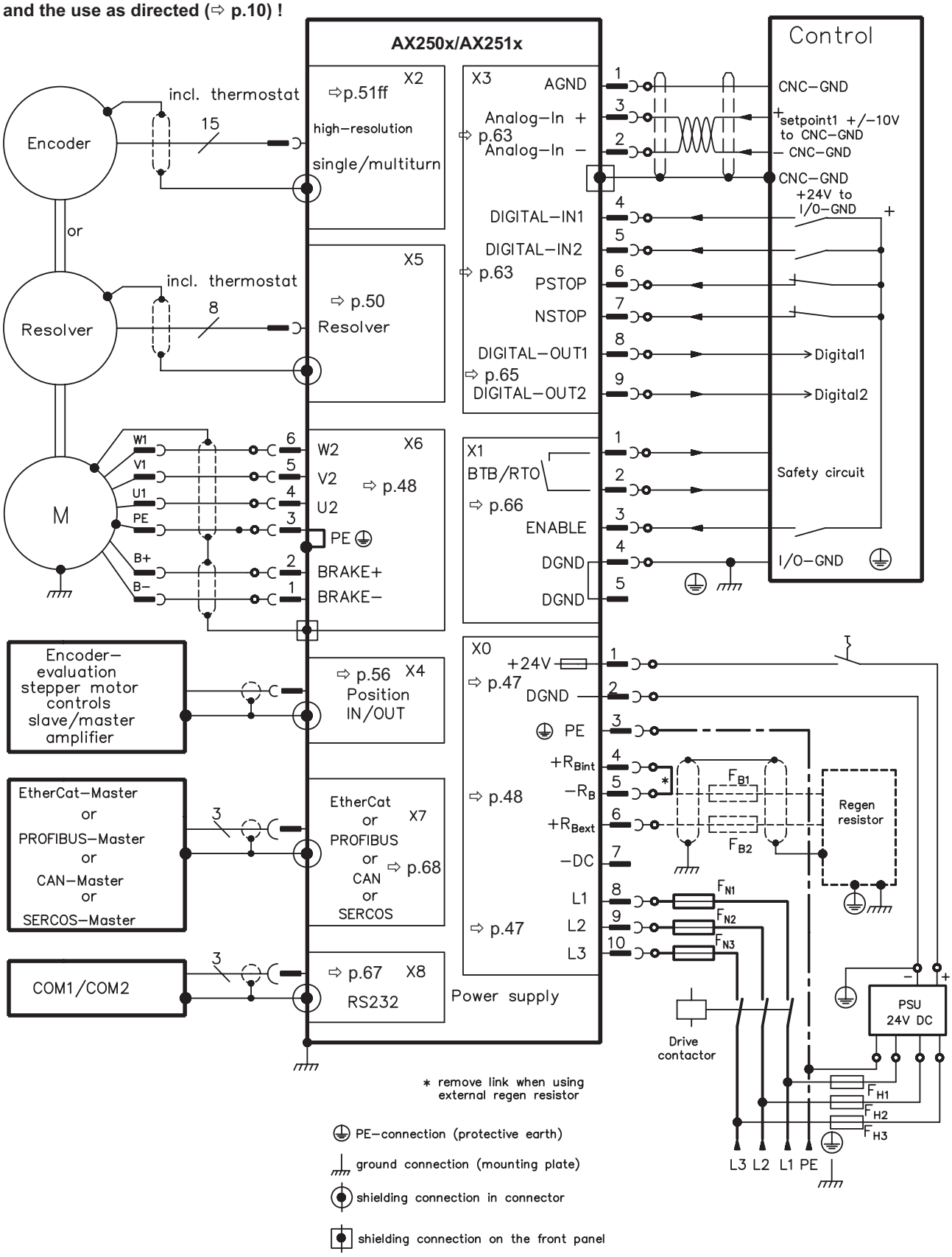

8.8 Connection diagram AX252x (overview)

Follow the safety instructions (⇨ p.9) and the use as directed (⇨ p.10) !

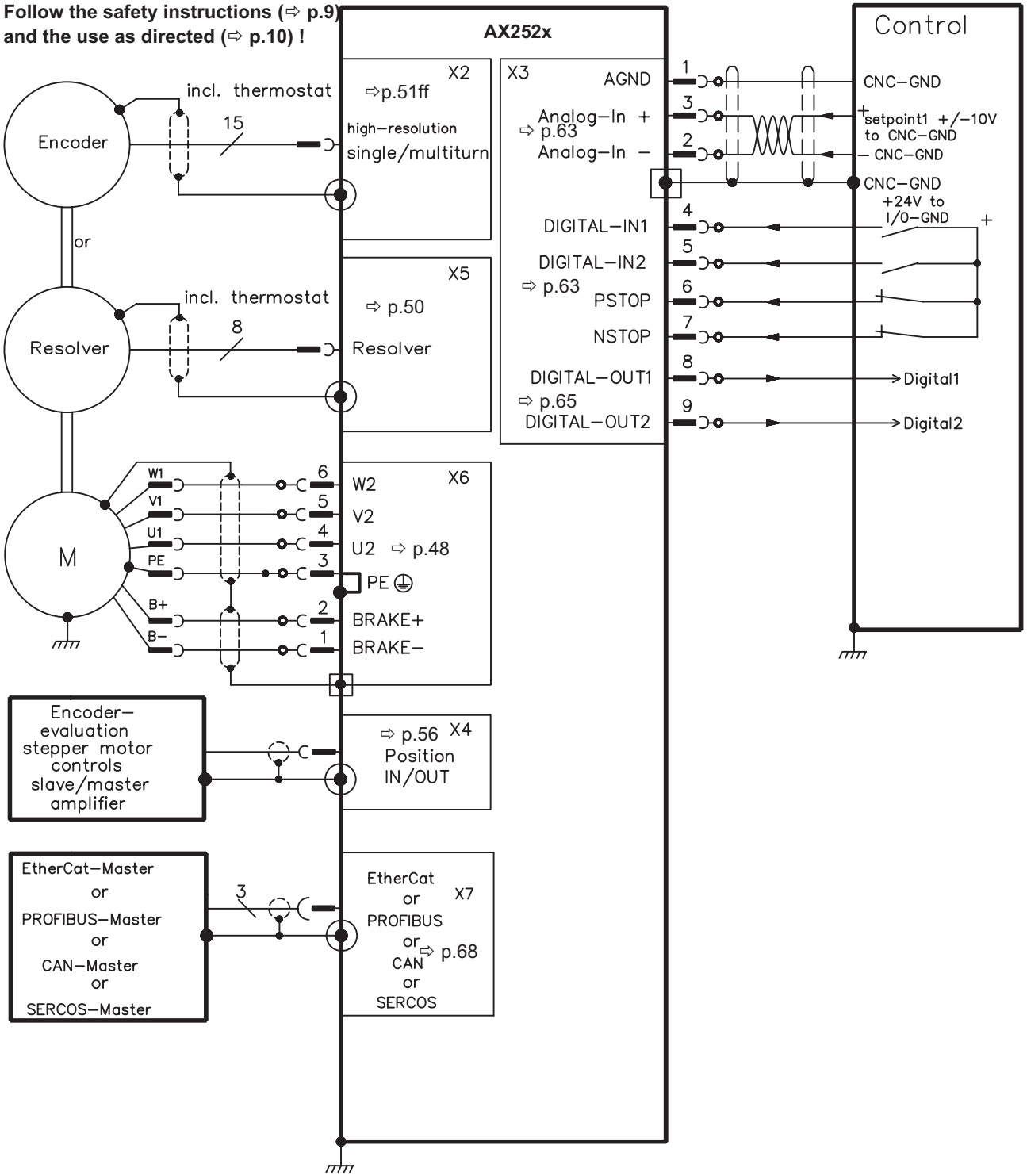

8.9 Power supply, master only

8.9.1 Mains supply connection (X0)

Three-phase supplies

Directly to earthed supply, filter is integrated, fusing (e.g. fusible cut-outs) to be provided by the user (⇨ p.19).

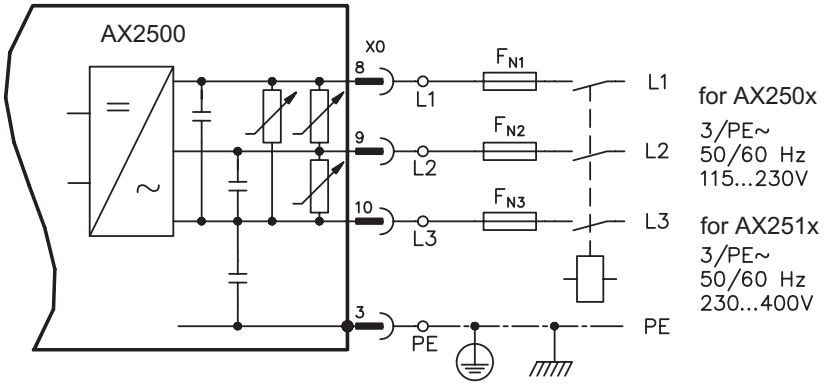

Single-phase supplies

Directly to supply, filter is integrated, fusing (e.g. fusible cut-outs) to be provided by the user (⇨ p.19).

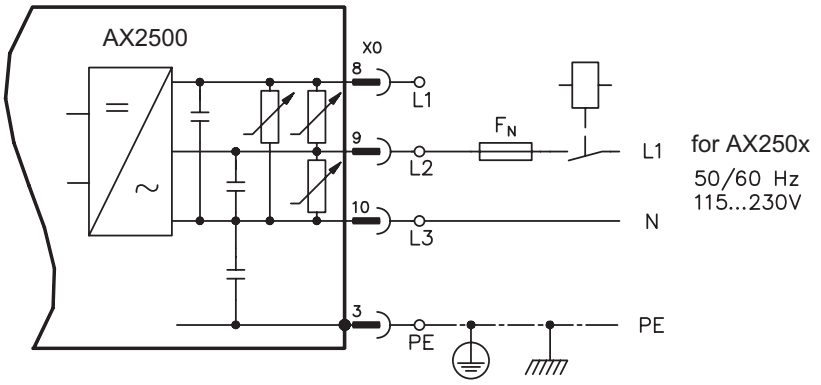

8.9.2 24V auxiliary voltage (X0)

— Electrically isolated supply from an external 24 V DC PSU, e.g. with isolating transformer
— Required current rating (⇨ p.19)
Observe summarized current and voltage drop!
— Integrated EMC filter for the 24 V auxiliary supply

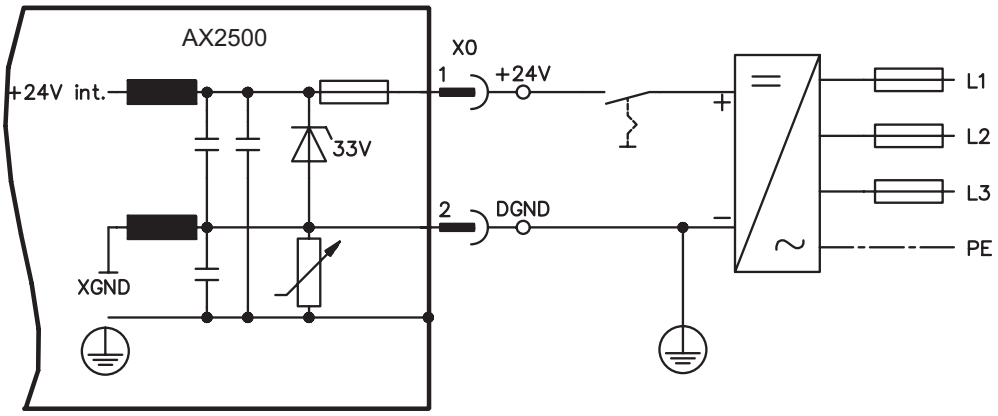

8.10 DC Bus link (X0)

Can be connected in parallel with further, identical masters (via terminals **-DC** and **RB_{ext}**).

Only servo amplifiers with mains supply from the same mains (identical mains supply voltage) may be connected by the DC bus link.

The sum of the rated currents for all of the servo amplifiers connected in parallel to an AX2500 must not exceed 24 A.

Use unshielded single cores (2.5mm²) with a max. length of 200 mm. Use shielded cables for longer lengths.

8.11 Motor connection with brake (X6)

Max. admisible length of the motor cable is 25 m.

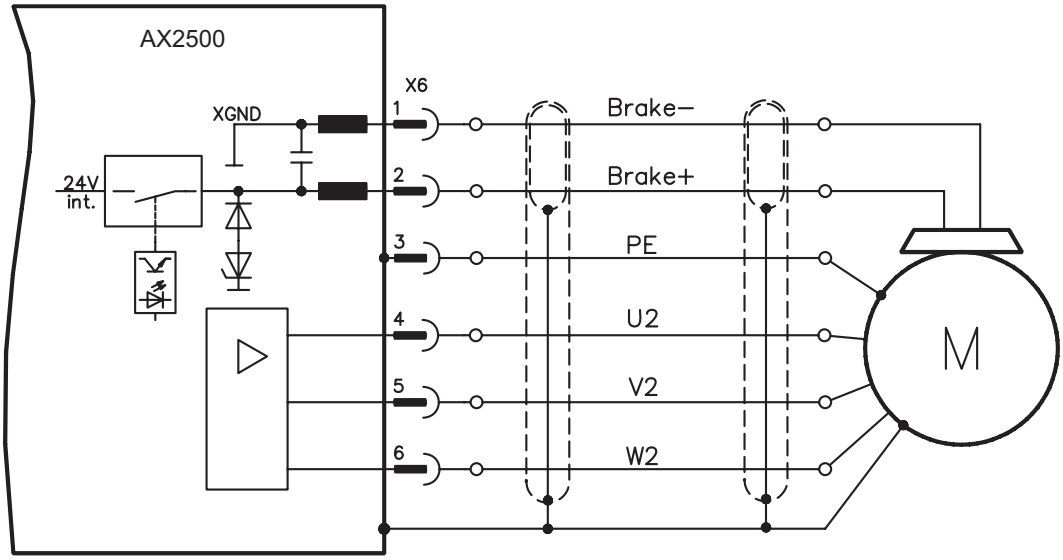

8.12 External regen resistor (X0), master only

Remove the plug-on link between terminals X0/5 ($-R_B$) and X0/4 ($+R_{bint}$).

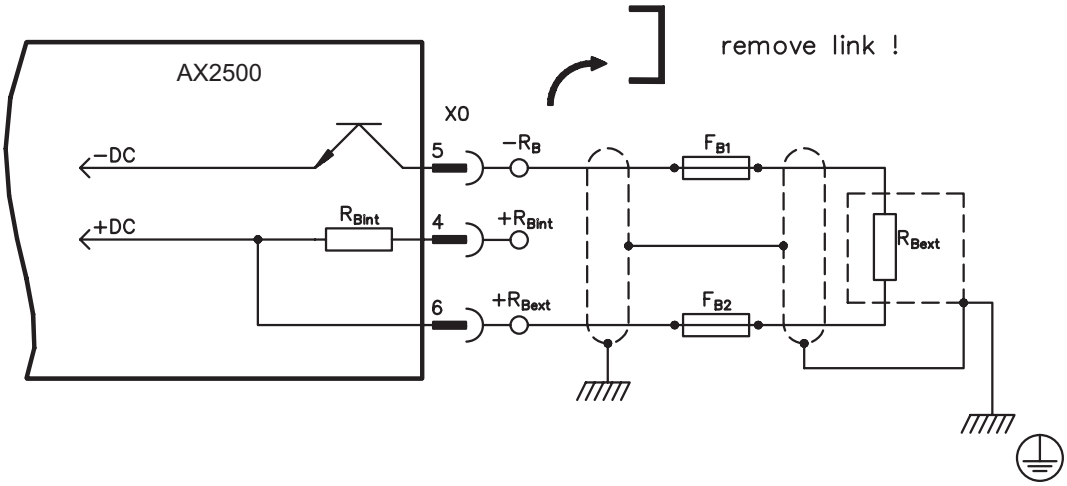

8.13 Feedback

Every closed servo system will normally require at least one feedback device for sending actual values from the motor to the servo drive. Depending on the type of feedback device used, information will be fed back to the servo amplifier using digital or analog means.

AX2500 supports the most common types of feedback device whose functions must be assigned with the parameters

FBTYPE (screen page FEEDBACK), primary Feedback
EXTPOS (screen page POSITION), secondary Feedback
GEARMODE (screen page GEARING), secondary Feedback

in the setup software. Scaling and other settings must always be made here.

Configuration	Location	ASCII Parameter	Commu-tation	Speed control	Position-control	electr. gearing
One Feedback	motor	FBTYPE	**X**	**X**	**X**	
Two Feedbacks	motor	FBTYPE	**X**	**X**		
	externally	EXTPOS			**X**	
		GEARMODE				**X**

For a detailed description of the ASCII parameters, please refer to the online help of the setup software.

The table below provides an overview of the supported feedback types, their corresponding parameters and a reference to the relevant connection diagram in each case. On each of these, the pin assignment shown on the encoder side relates to the BECKHOFF motors.

Primary feedback type	Connector	Wiring diagram	FBTYPE
Resolver	X5	⇨ S.50	0, 3
SinCos Encoder BISS	X2	⇨ S.51	20*
SinCos Encoder ENDAT	X2	⇨ S.52	3, 4
SinCos Encoder HIPERFACE	X2	⇨ S.52	2, 3
SinCos Encoder w/o data channel	X2	⇨ S.53	6, 7 (16*)
SinCos Encoder + Hall	X2	⇨ S.54	11*
RS422 5V	X4	⇨ S.55	8*, 9*
Sensorless (w/o feedback)	-	-	10*

* Can only be set on the terminal screen of the setup software
** RS422 means “incremental encoder AquadB”.

Hints for combining primary with secondary feedback systems for position control/electr. gearing can be found from page 56.

8.13.1 Resolver (X5)

Connection of a Resolver (2 to 36-poles) as a feedback system. The thermostat contact in the motor is connected via the resolver cable to the AX2500 and evaluated there.

If lead lengths of more than 25 m are planned, please consult our customer support.

FBTYPE: 0, 3

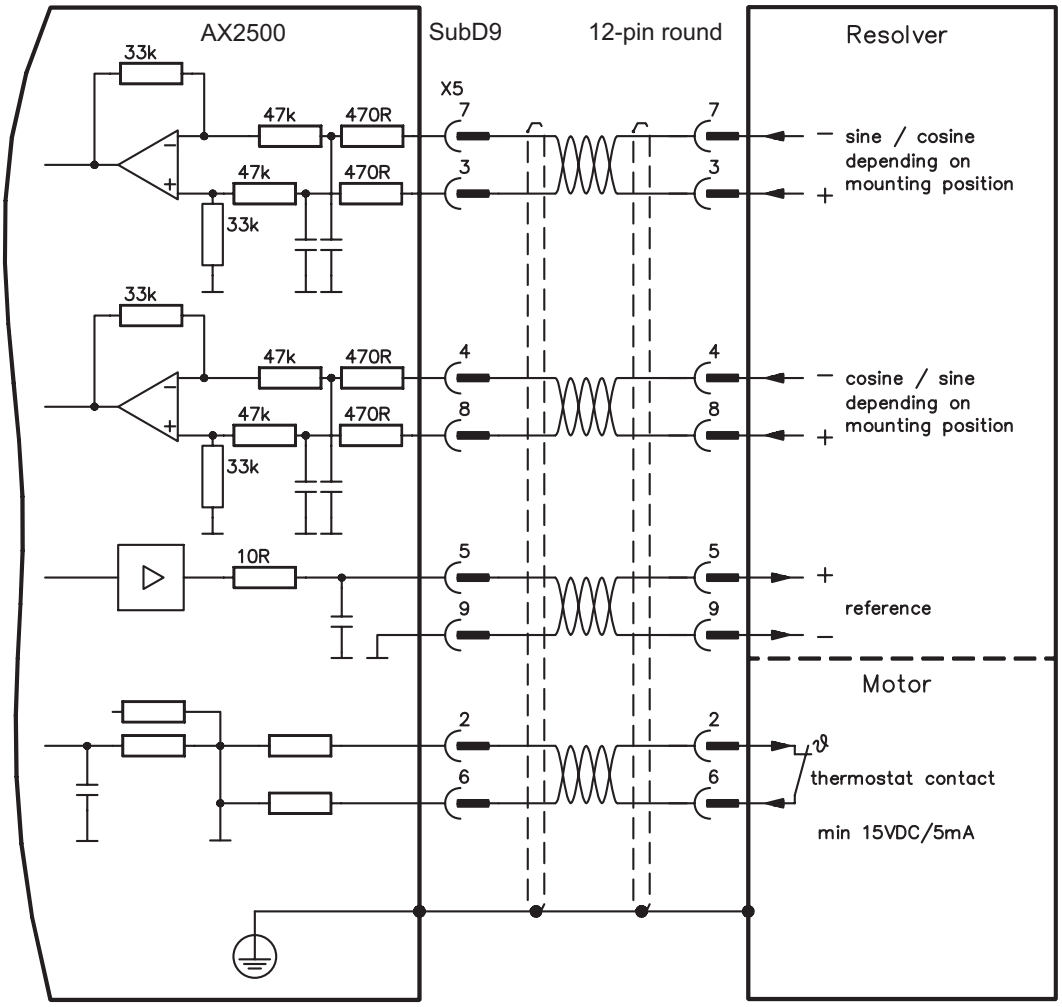

8.13.2 Sine encoder 5V with BISS (X2)

Connection of a single- or multiturn sine-cosine encoder (5V) with BISS interface as feedback (from firmware revision 6.68). During start-up of the servo amplifier the parameters stored in the encoder eeprom are uploaded, after that phase only the sine/cosine signals are used.

The thermostat contact in the motor is connected via the encoder cable to X2 and evaluated there. All signals are connected using our pre-assembled encoder connection cable.

If cable lengths of more than 50m are planned, please consult our customer service.

Frequency limit (sin, cos): 350 kHz
FBTYPE: 20

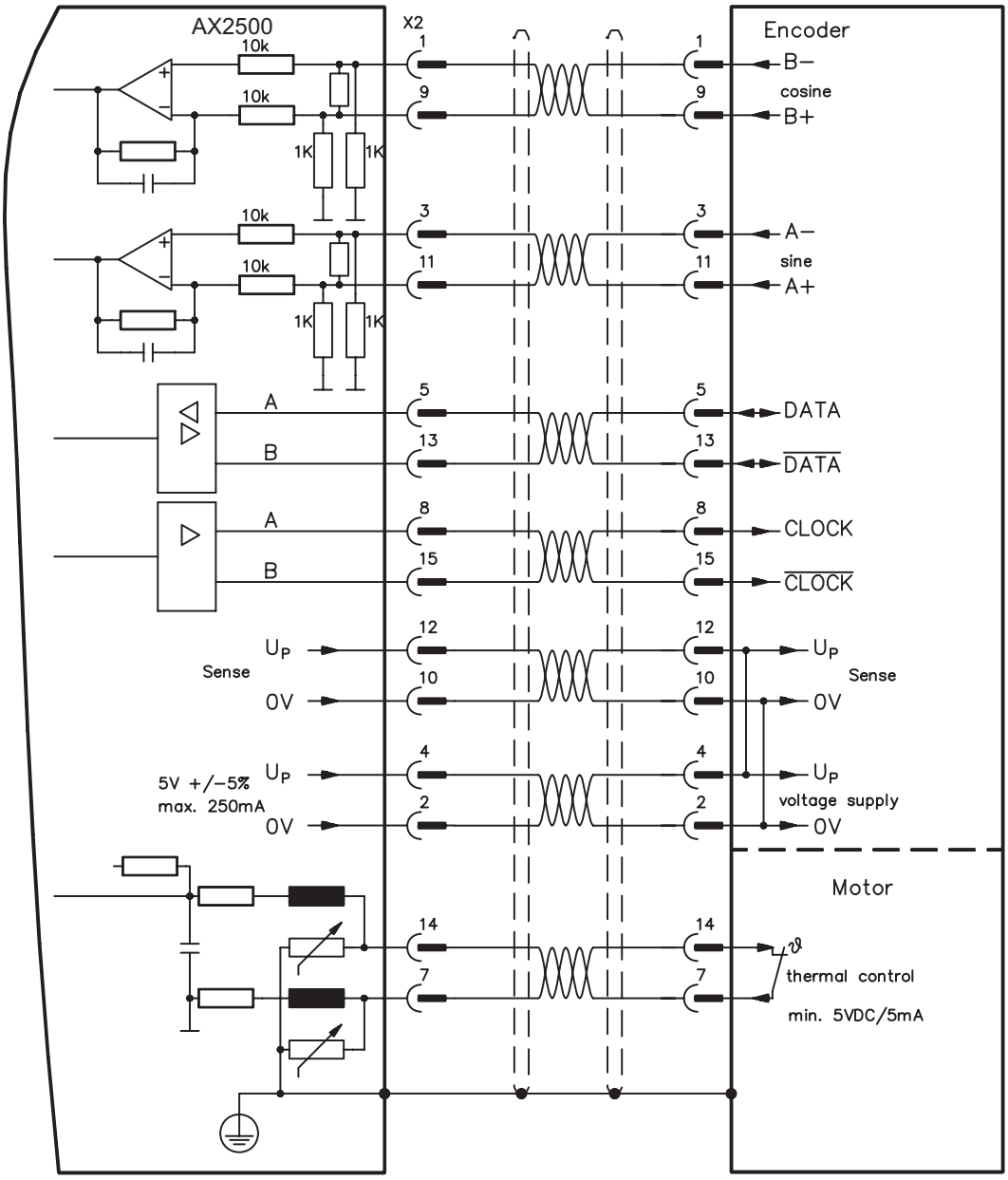

8.13.3 Sine Encoder with EnDat 2.1 or HIPERFACE (X2)

Connection of a single-turn or multiturn sine-cosine encoder. Preferred types are the ECN1313 and EQN1325 encoders.

The thermostat contact in the motor must be connected via the encoder cable to the AX2500 and evaluated there. All signals are connected using our pre-assembled encoder connection cable.

If lead lengths of more than 25 m are planned, please consult our customer support.

Frequency limit (sin, cos): 350 kHz
Encoder with EnDat: FBTYPE 3, 4
Encoder with HIPERFACE: FBTYPE 2, 3

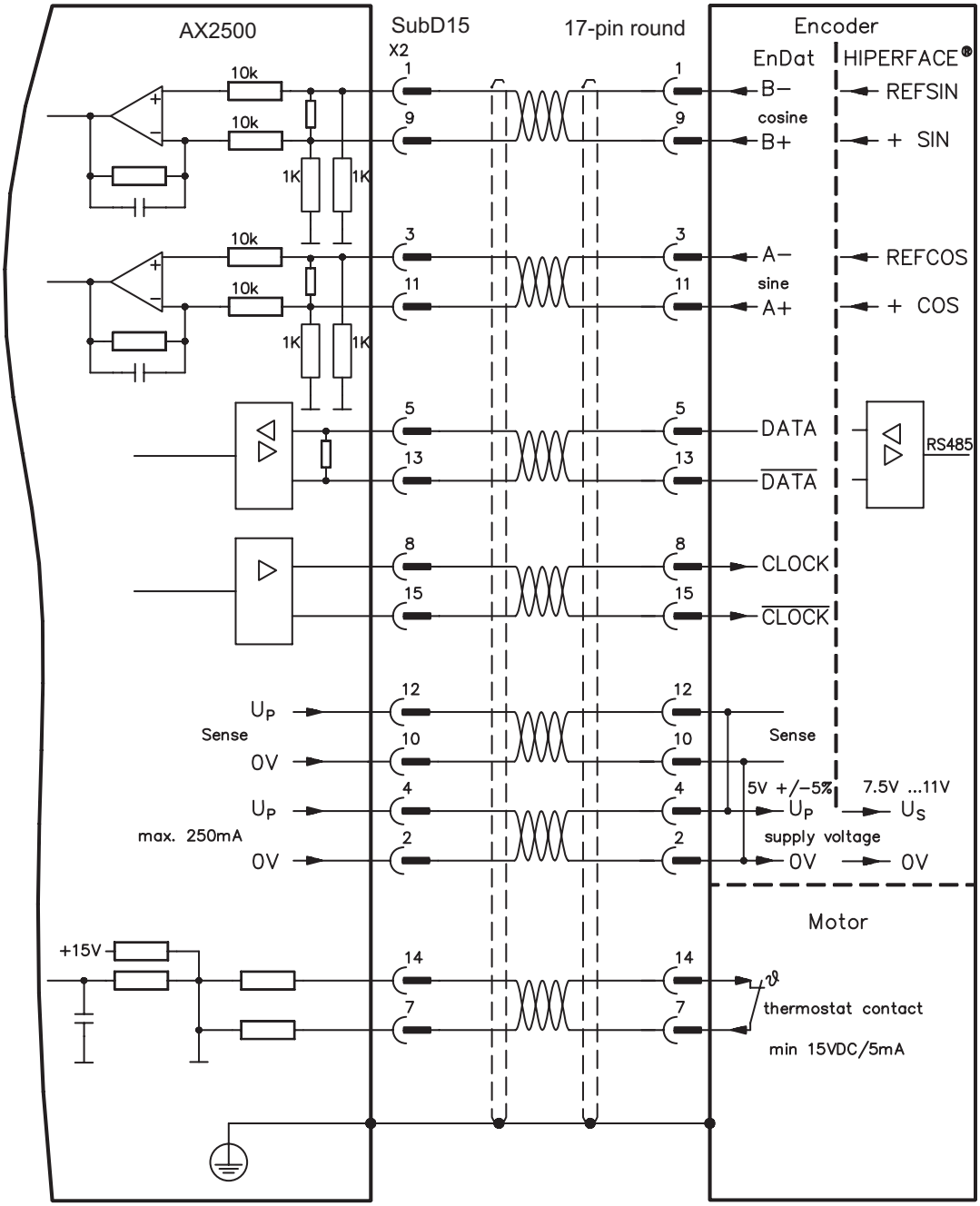

8.13.4 Sine Encoder without data channel (X2)

Connection of a sine-cosine encoder without data channel as feedback. Every time the 24V auxiliary voltage is switched on, the amplifier needs start-up information for the position controller (parameter value MPHASE). Depending on the feedback type either wake&shake is executed or the value for MPHASE is read out of the amplifier's EEPROM.

The thermostat contact in the motor must be connected via the encoder cable to X2 and evaluated there.

If lead lengths of more than 50 m are planned, please consult our customer service.

Frequency limit (sin, cos): 350 kHz

Encoder type	FBTYPE	Remarks
SinCos 5V	6	MPHASE from EEPROM
SinCos 5V	7	MPHASE with wake & shake
Resolver+SinCos5V	16	Commutation with resolver, Speed&Position with Encoder

WARNING !

Don't use this feedback type with vertical load (hanging load).

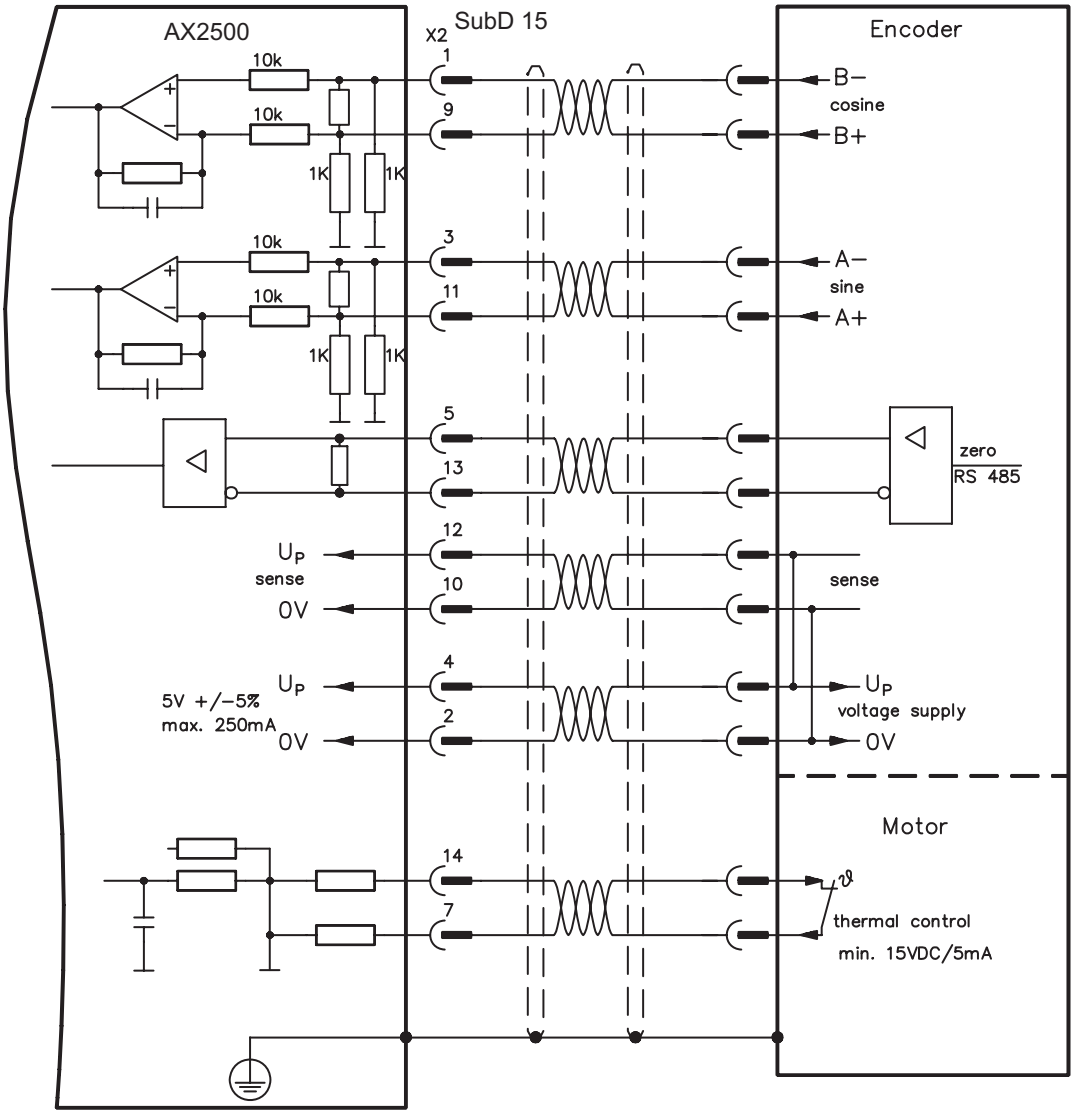

8.13.5 Incremental or sine encoder with hall sensors (X2)

Feedback devices (incremental or sine-cosine), which don't deliver an absolute information for commutation, can be used as complete feedback system combined with an additional Hall encoder. All signals are connected to X2.

If cable lengths of more than 25 m are planned, please consult our customer service.

Frequency limit (A, B): 350 kHz

RS422 with Hall: FBTYPE 12
Encoder with Hall: FBTYPE 11

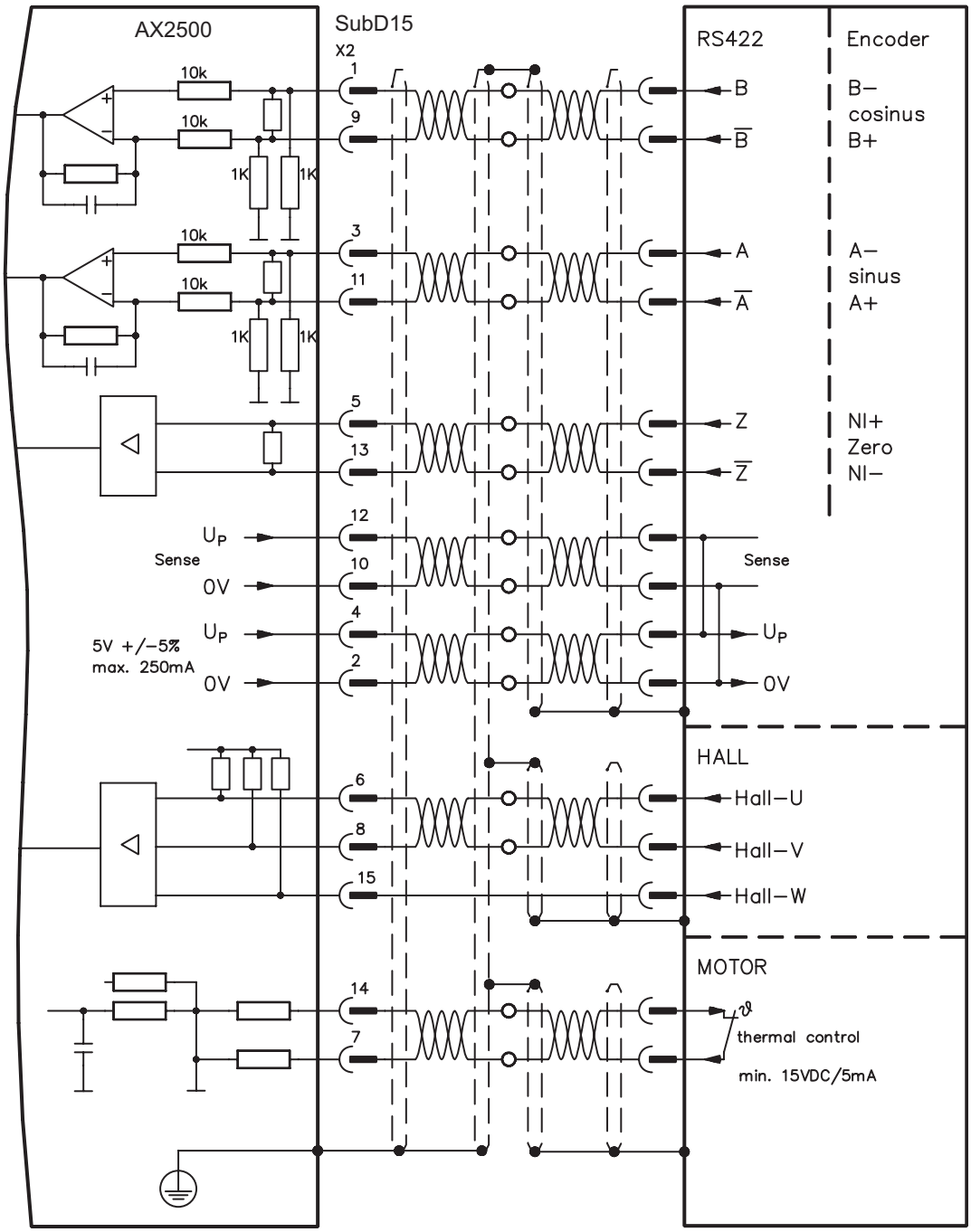

8.13.6 Incremental Encoder (X4)

An incremental encoder can be used as standard motor feedback.

Every time the 24V auxiliary voltage is switched on, the amplifier needs start-up information for the position controller (parameter value MPHASE). Depending on the feedback type either wake&shake is executed or the value for MPHASE is read out of the amplifier's EEPROM.

The thermostat contact in the motor must be connected to X2 (see p.52) or X5 (see p.50).

If lead lengths of more than 50 m are planned and for questions concerning the power supply of the encoder, please consult our customer service.

Frequency limit (A, B): 1.5 MHz

Encoder type	FBTYPE	Remarks
RS422 5V	9	MPHASE from EEPROM
RS422 5V	8	MPHASE with wake & shake

WARNING !

Don't use this feedback type with vertical load (hanging load).

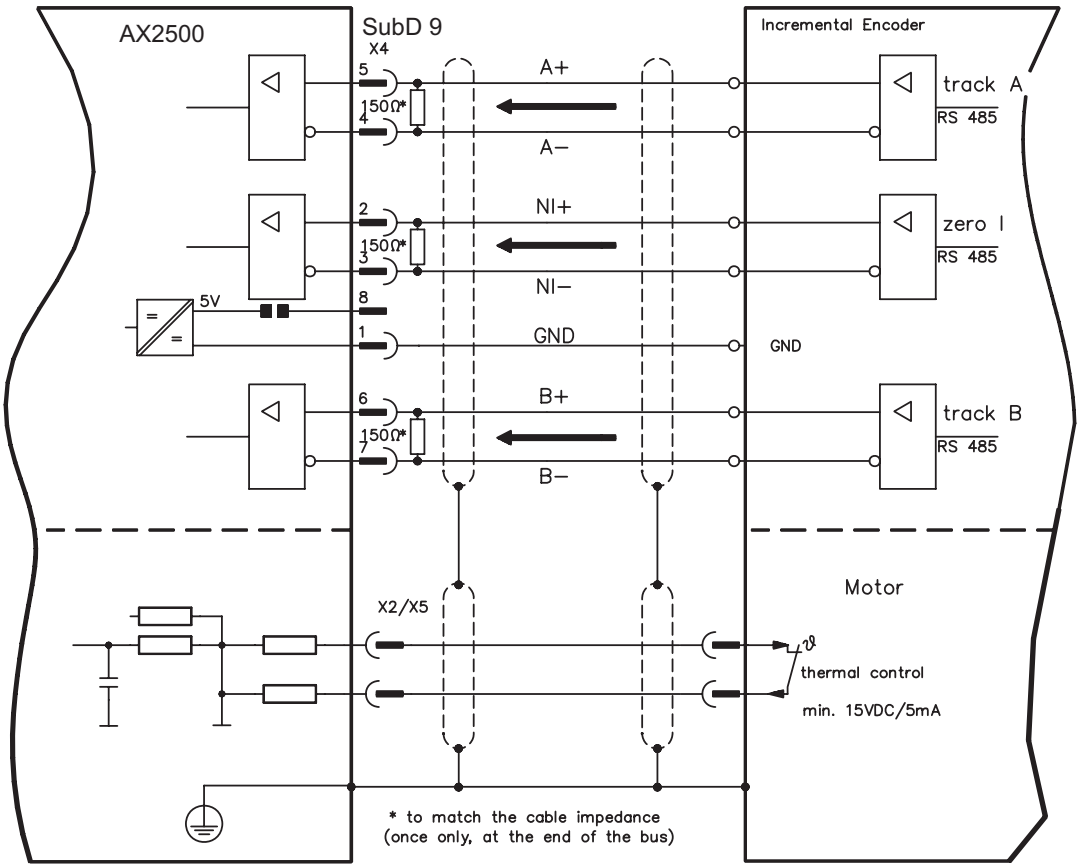

8.14 Electronic Gearing, Master-slave operation

In the case of the “electronic gearing” functionality (see setup software and description of GEARMODE parameter), the servo amplifier is controlled by a secondary feedback device as a slave.
It is possible to set up master/slave systems, use an external encoder as a setpoint encoder or connect the amplifier to a stepper motor control.
The amplifier is parameterized using the setup software (electronic gearing).
Primary Feedback: adjust on screen page "Feedback" (FBTYPE)
Secondary Feedback: adjust on screen pages "Position" and "Gearing" (EXTPOS, GEARMODE)
Master-/Slave adjustment
Master: adjust encoder emulation on screen page "ROD/SSI/Encoder" (ENCMODE)
Slave: adjust on screen pages "Position" and "Gearing" (EXTPOS, GEARMODE)

The following types of external encoder can be used:

secondary Feedback type	Connector	Wiring diagram	GEARMODE
Incremental Encoder 5V	X4	⇨ p.57	3, 5*, 13*, 15*
Incremental Encoder 24V	X3	⇨ p.57	0, 2*, 10*, 12*
Sine/Cosine Encoder	X2	⇨ p.58	6, 8*, 9*, 16*
SSI Encoder	X4	⇨ p.59	7*, 17*
Pulse and Direction 5V	X4	⇨ p.60	4, 14*
Pulse and Direction 24V	X3	⇨ p.60	1, 11*

* adjustable via terminal screen of the setup software

The following table shows the allowed feedback combinations:

	Secondary Feedback for Position control/Following			
Primary Feedback	**Sine Encoder (X2)**	**Increm. Encoder 5V/24V (X4/X3)**	**Pulse&Direct. 5V/24V (X4/X3)**	**SSI Encoder (X4)**
Resolver (X5) FBTYPE= 0	EXTPOS= 1,2,3 GEARMODE= 6,8,9,16 FPGA= 0 ENCMODE= 0	EXTPOS= 1,2,3 GEARMODE= 0,2,3,5,10,12,13,15 FPGA= 0 ENCMODE= 0	EXTPOS= 1,2,3 GEARMODE= 1,4,11,14 FPGA= 0 ENCMODE= 0	EXTPOS= 1,2,3 GEARMODE= 7,17 FPGA= 1 ENCMODE= 2
Sine Encoder (X2) FBTYPE= 2,4,6,7,20	-	EXTPOS= 1,2,3 GEARMODE= 0,2,3,5,10,12,13,15 FPGA= 1 ENCMODE= 0	EXTPOS= 1,2,3 GEARMODE= 1,4,11,14 FPGA= 1 ENCMODE= 0	EXTPOS= 1,2,3 GEARMODE= 7,17 FPGA= 1 ENCMODE= 2
Encoder & Hall (X2) FBTYPE= 11,12	-	EXTPOS= 1,2,3 GEARMODE= 0,2,3,5,10,12,13,15 FPGA= 1 ENCMODE= 0	EXTPOS= 1,2,3 GEARMODE= 1,4,11,14 FPGA= 1 ENCMODE= 0	-
RS422 Encoder (X4) FBTYPE= 8,9	-	-	-	-
Sensorless FBTYPE= 10	-	EXTPOS= 1,2,3 GEARMODE= 0,2,3,5,10,12,13,15 FPGA= 0 ENCMODE= 0	EXTPOS= 1,2,3 GEARMODE= 1,4,11,14 FPGA= 0 ENCMODE= 0	EXTPOS= 1,2,3 GEARMODE= 7,17 FPGA= 1 ENCMODE= 2

8.14.1 Connection to a AX2500 master, 5 V signal level (X4)

You can link several AX2500 amplifiers in master-slave operation (encoder follower).

Up to 16 slave amplifiers can be controller by the master via the encoder output. The SubD connector X4 is used for this purpose.

Frequency limit: 1 MHz, transition speed tv ≤ 0.1 µsec

AGND (terminal X3/1) must be connected to the ground of the control system!

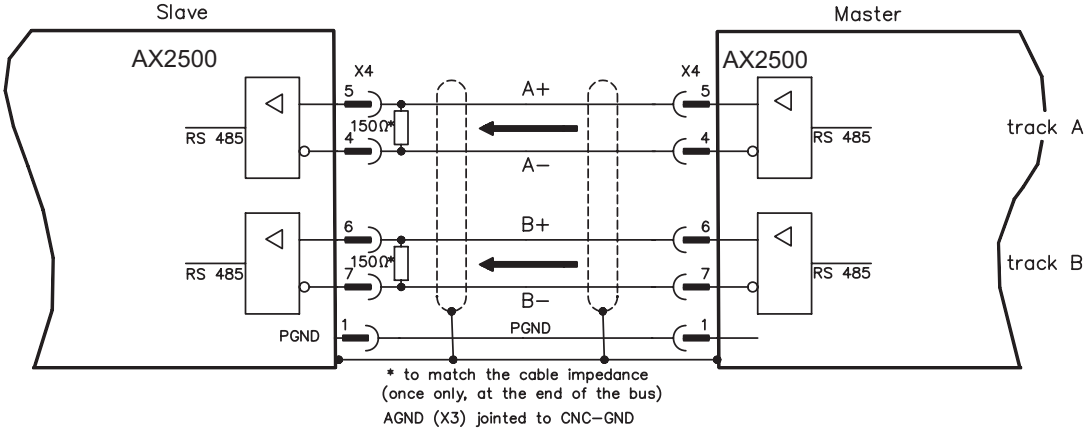

8.14.2 Connection to incremental encoder master with 24 V signal level (X3)

You can use this interface to set up the AX2500 as a slave following an encoder with a 24V signal level (master-slave operation). This application uses the digital inputs DIGITAL-IN 1 and 2 on connector X3.

Frequency limit: 100 kHz, transition speed tv ≤ 0.1 µsec

AGND (terminal X3/1) must be connected to the ground of the control system!

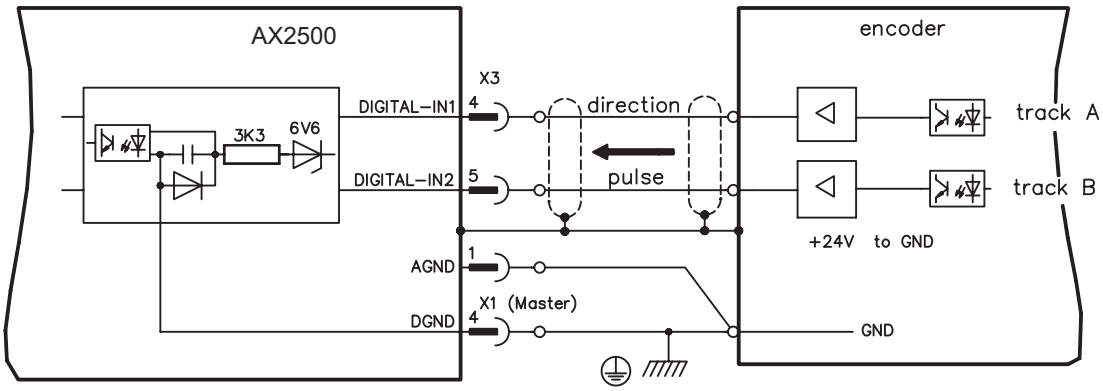

8.14.3 Connection to a sine-cosine encoder master (X2)

You can set up the AX2500 as a slave following a sine/cosine encoder (master-slave operation). This application uses the SubD connector X2.

If cable lengths of more than 50m are planned, please consult our customer service.

Frequency limit (sin, cos): 350 kHz

AGND (terminal X3/1) must be connected to the ground of the control system!

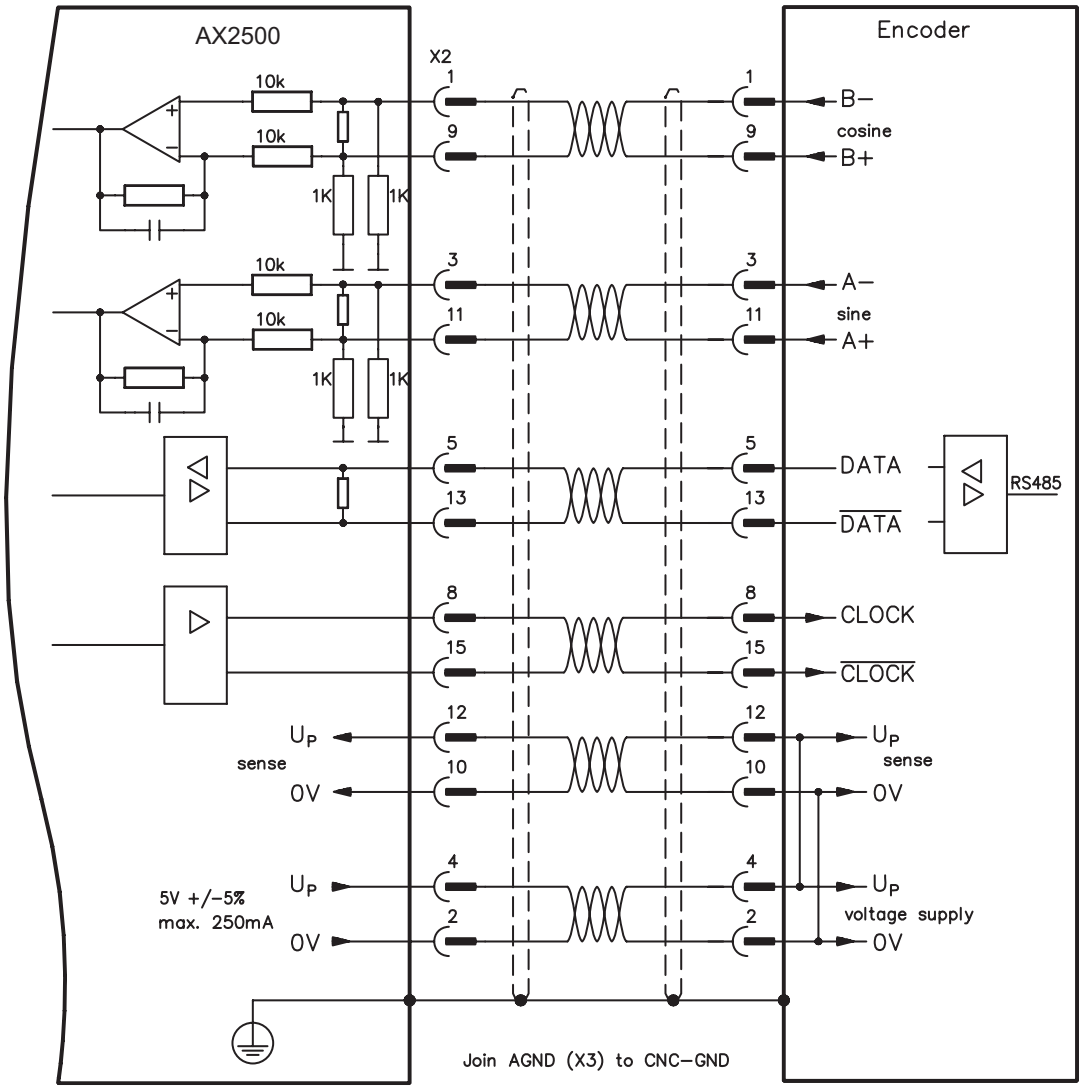

8.14.4 Connection to a SSI encoder (X4)

You can set up the AX2500 as a slave following a synchronous serial absolute-encoder (master-slave operation). This application uses the SubD connector X4.
If lead lengths of more than 50 m are planned and for questions concerning the power supply of the encoder, please consult our customer service.

Frequency limit: 1 MHz

AGND (terminal X3/1) must be connected to the ground of the control system!

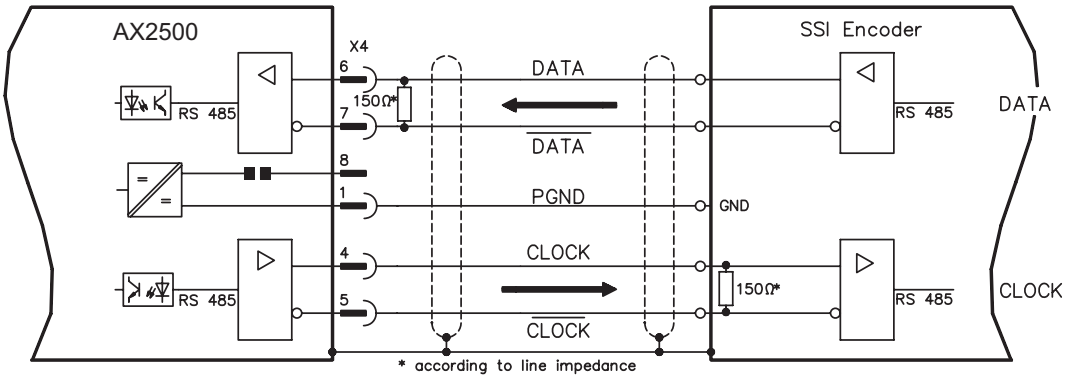

8.14.5 Connection to stepper motor controllers (pulse and direction)

You can connect the servo amplifier to a third-party stepper-motor controller. The parameters for the servo amplifier are set up with the aid of the setup software (electrical gearing). The number of steps can be adjusted, so that the servo amplifier can be adjusted to the pulse/direction signals of any stepper-motor controller. Various monitoring signals can be output.

Observe the limit frequency!
Using an A quad B encoder provides better EMC noise immunity.

<u>Speed profile and signal diagram</u>

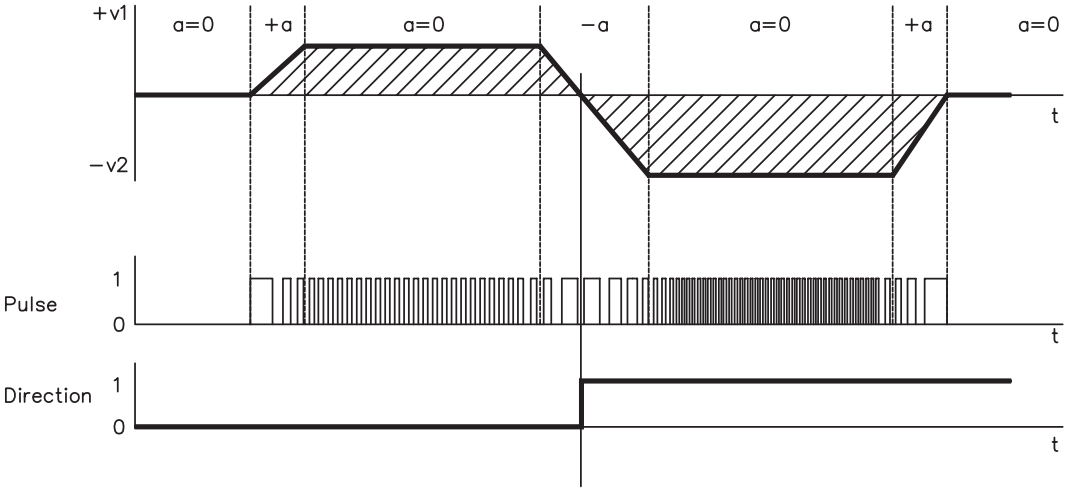

<u>Equivalences</u>
path traversed s —— number of pulses
velocity v —— pulse frequency
acceleration a —— rate of change of pulse frequency

8.14.5.1 Step/Direction with 5 V signal level (X4)

Connection of the servo amplifier to a stepper motor control with a 5 V signal level. The SubD connector X4 is used for this purpose.
Frequency limit: 1 MHz

AGND (terminal X3/1) must be connected to the ground of the control system!

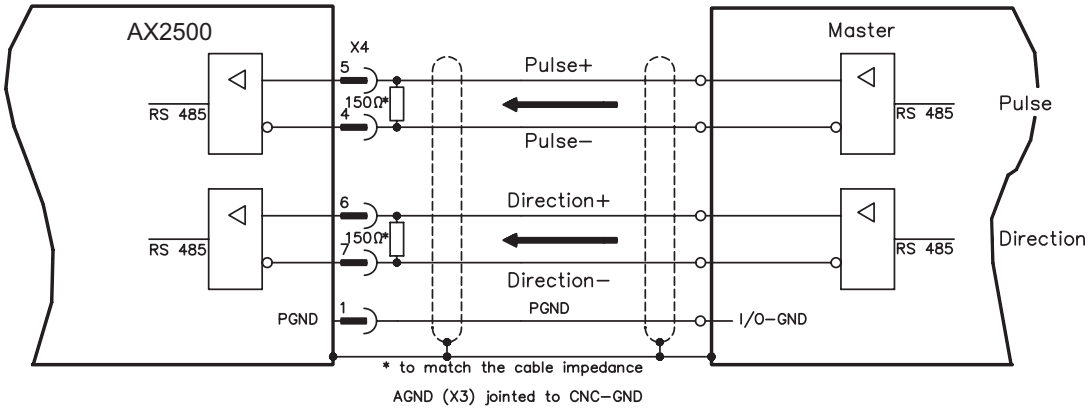

8.14.5.2 Step/Direction with 24 V signal level (X3)

Connection of the servo amplifier to a stepper motor control with a 24 V signal level. The digital inputs DIGITAL-IN 1 and 2 on connector X3 are used for this purpose.
Frequency limit: 100 kHz

AGND (terminal X3/1) must be connected to the ground of the control system!

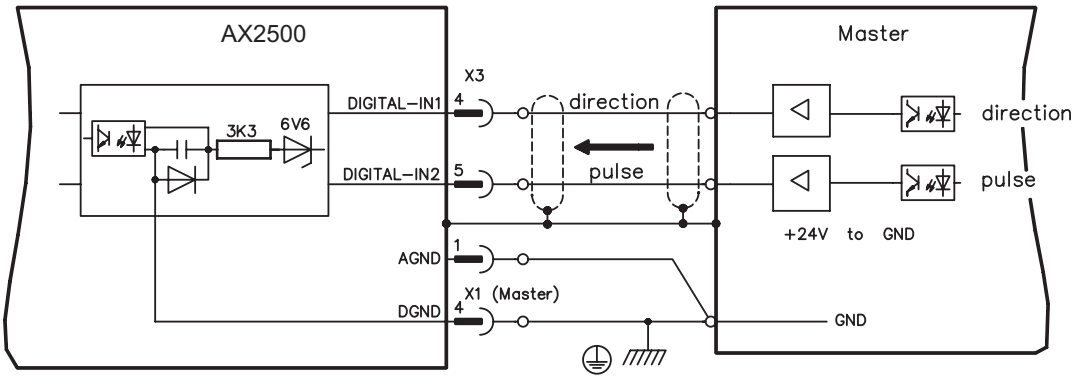

8.15 Encoder emulations

8.15.1 Incremental encoder output - A quad B (X4)

The incremental-encoder interface is part of the package supplied. Select the encoder function ROD (screen page “Encoder”, funktion ENCMODE). In the servo amplifier, the position of the motor shaft is calculated from the cyclic-absolute signals of the resolver or encoder.
Incremental-encoder compatible pulses are generated from this information. Pulses are output as two signals, A and B, with 90° phase difference and a zero pulse. The resolution (lines before quadrature) can be changed with the RESOLUTION parameter:

Encoder function	Feedback system	Resolution	Zero position
ROD (1)	Resolver	256...4096	one per revolution (only if A=B=1)
	Encoder	256...524288 (2^8 ... 2^{19})	one per revolution (only if A=B=1)
ROD interpolation (3)	Encoder	2^2...2^7 TTL lines per sine line	analog pass through X2 to X4

You can also adjust and store the position of the zero pulse within one mechanical turn (parameter NI-OFFSET). The ground reference for the interface is PGND.

PGND must always be connected to the control ground. The max. admissible cable length is 10 m.

Connections and signal description for the incremental-encoder interface :
The count direction is UP when the motor shaft is rotating clockwise (looking at the end of the motor shaft).

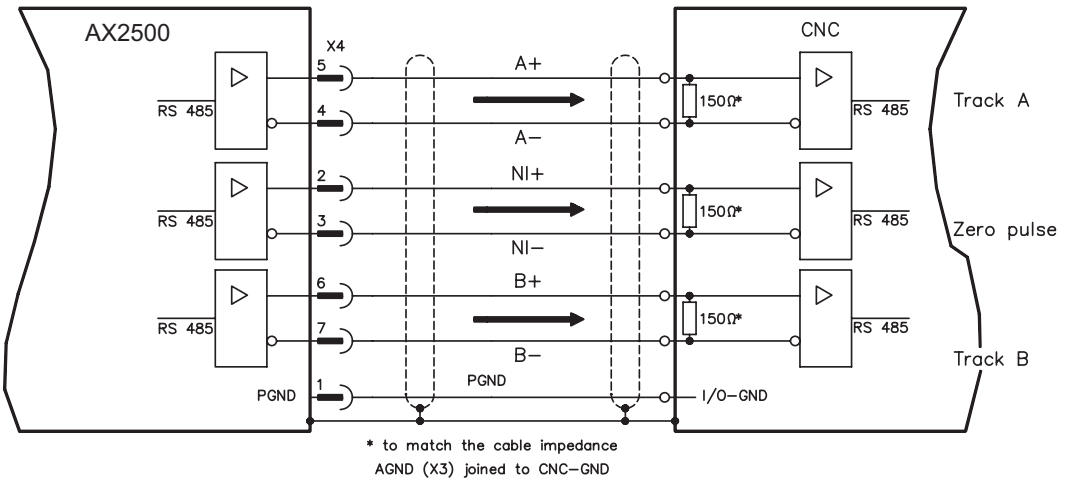

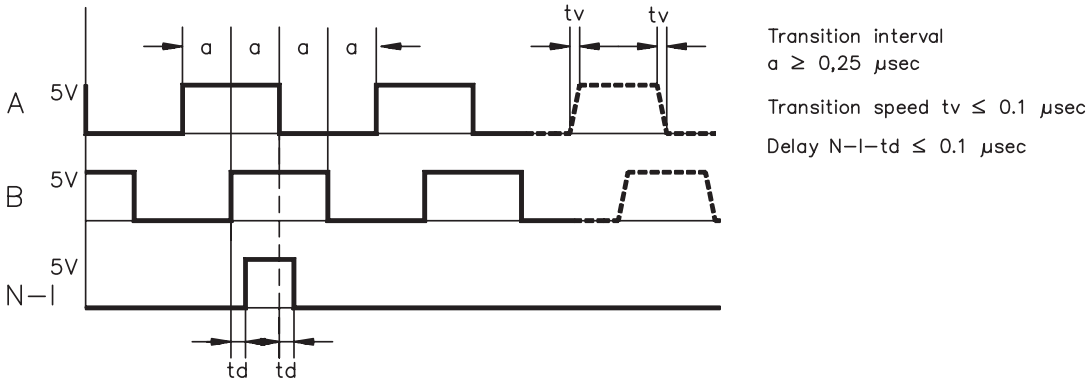

8.15.2 SSI output (X4)

The SSI interface (synchronous serial absolute-encoder emulation) is part of the package supplied. Select encoder function ROD (“Encoder” screen page).

The servo amplifier calculates the motor shaft position from the cyclic-absolute signals of the resolver or encoder. From this information a SSI date (after Stegmann patent specification DE 3445617C2) is provided.

28 bits are transferred. The 12 leading data bits contains the number of revolutions. The following max. 16 bits contain the resolution and are not variable.

The following table shows the allocation of the SSI date:

Revolution												Resolution															
11	10	9	8	7	6	5	4	3	2	1	0	15	14	13	12	11	10	9	8	7	6	5	4	3	2	1	0

The signal sequence can be output in **Gray** code or in **Binary** (standard) code (parameter SSI-CODE). The servo amplifier can be adjusted to the clock frequency of your SSI-evaluation through the SSI-TIMEOUT parameter (cycle time 1.3 µs or 10 µs).

The ground reference for the interface is PGND.

PGND must always be connected to the control ground.

Connection and signals for the SSI interface :
The count direction is UP when the motor shaft is rotating clockwise (looking at the end of the motor shaft).

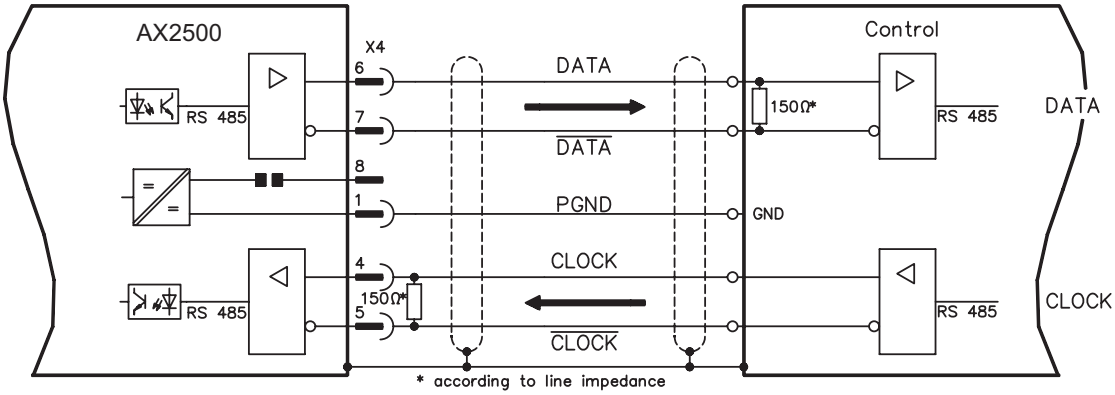

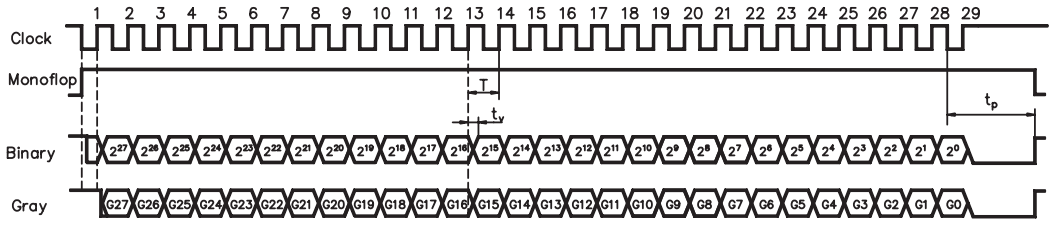

Switch over time Data $t_v \leq 300$nsec
Period T = 600 ns
Time Out t_p = 1.3µs/10µs (SSITOUT)

Output $|\Delta U| \geq 2V/20mA$
Input $|\Delta U| \geq 0.3V$

8.16 Digital and analog inputs and outputs

8.16.1 Analog input (X3)

The servo amplifier has a **programmable** input for analog setpoints.
AGND (X3/1) must always be joined to the CNC-GND of the controls to provide a ground reference.

Technical data

— Input voltage max. ± 10 V
— Resolution 1.25 mV
— Ground reference AGND, terminal X3/1
— Input resistance 20 kΩ
— Common mode voltage range for both inputs ± 10 V supplementary
— Update rate: 62.5 µs

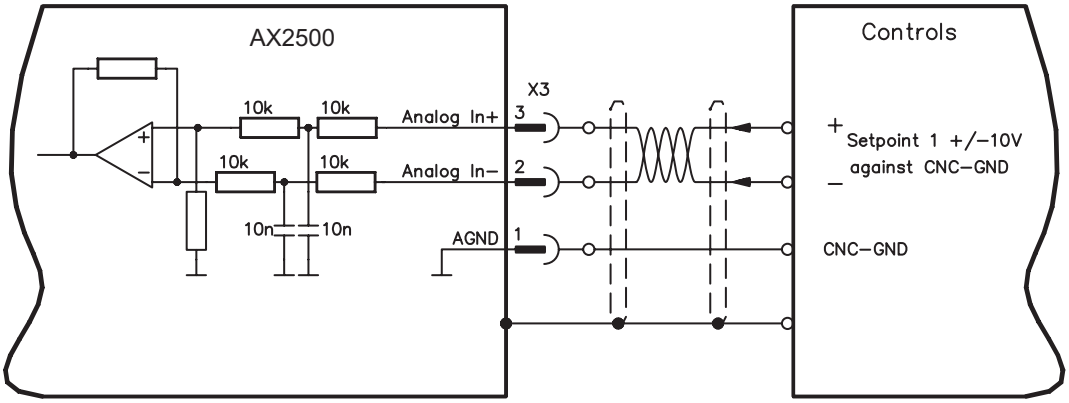

Input Analog-IN (terminals X3/2-3)
Input voltage max. ± 10 V, 14-bit resolution, scalable
Standard setting: Speed Setpoint

Fixing the direction of rotation
Standard setting: clockwise rotation of the motor shaft (looking at shaft end) with positive voltage on terminal X3/3 (+) against X3/2 (-)

To reverse the direction of rotation you can swap the connections to terminals X3/2-3 or change the *DIRECTION* parameter in the *SPEED* screen.

8.16.2 Digital inputs (X3)

All digital inputs are **electrically isolated** through optocouplers.

Technical data

— Reference ground is **digital**-GND (DGND, terminal X1/4,5 on the master)
— The logic is dimensioned for +24 V / 7 mA (**PLC-compatible**)
— H-level from +12...36 V / 7 mA, L-level from 0...7 V / 0 mA
— Update rate: Software:250 µs / Hardware: 2 µs

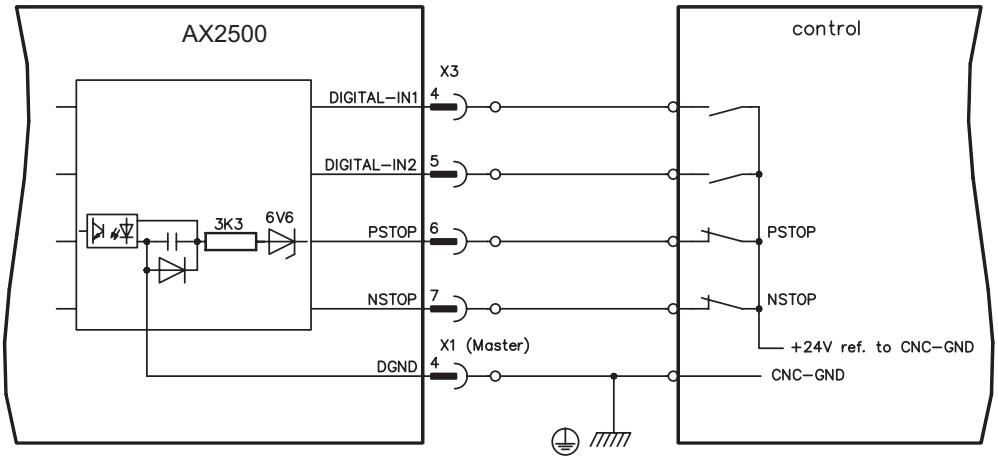

You can use the digital inputs PSTOP / NSTOP / DIGITAL-IN1 and DIGITAL-IN2 to initiate pre-programmed functions that are stored in the servo amplifier.
You will find a list of the pre-programmed functions in the Online Help.
If an input has to be re-assigned to a pre-programmed function, then the data set must be stored in the EEPROM of the servo amplifier, and the 24 V auxiliary supply for the servo amplifier must be switched off and then on again (to reset the amplifier software).

Limit-switches PSTOP / NSTOP

Terminals X3/6 and X3/7 are used to connect limit switches. They are deactivated upon delivery. If these inputs are not needed for the connection of limit switches, then they can be used for other input functions.

Limit-switch positive/negative (**PSTOP / NSTOP**, terminals X3/6 and X3/7), high level in normal operation (fail-safe for cable break). A low signal (open) inhibits the corresponding direction of rotation.

DIGITAL-IN 1 / DIGITAL-IN 2

You can link the digital inputs at terminals X3/4 (DIGITAL-IN 1) and X3/5 (DIGITAL-IN2) with a pre-programmed function.

8.16.3 Digital outputs (X3)

Technical characteristics

— Ground reference is Digital-GND (DGND, terminal X1/4,5 on the master)
— Alle digital outputs are floating
— DIGITAL-OUT1 and 2 : Open-collector, max. 30 V DC, 10 mA
— Update rate: 250 µs

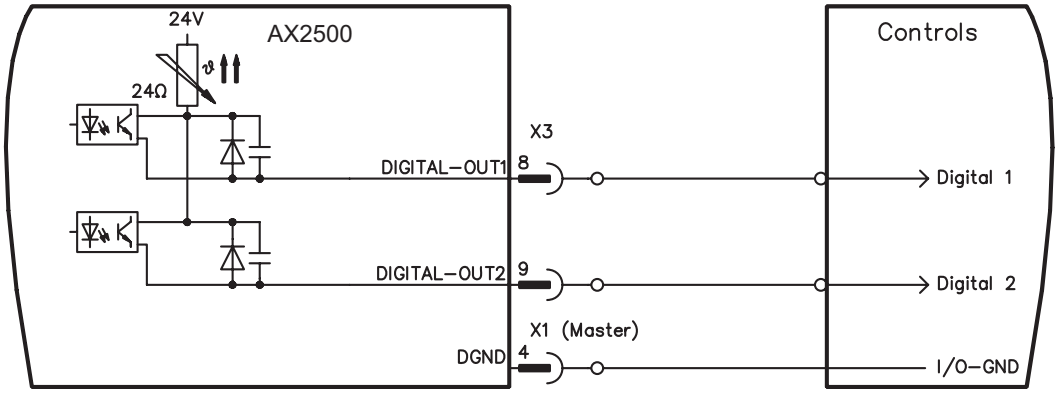

Programmable digital outputs DIGITAL-OUT 1 / 2:

You can use the digital outputs DIGITAL-OUT1 (terminal X3/8) and DIGITAL-OUT2 (terminal X3/9) to output messages from pre-programmed functions that are stored in the servo amplifier.
A list of the pre-programmed functions can be found in the Online Help.
If an input is freshly assigned to a pre-programmed function, then the data set must be stored in the EEPROM of the servo amplifier, and the 24 V auxiliary supply of the servo amplifier must be switched off and on again (to reset the amplifier software).

8.16.4 Digital I/O on the Master (X1)

Technical characteristics

— Ground reference is **Digital**-GND (DGND, terminal X1/4,5)
— The logic is dimensioned for +24 V / 7 mA (**PLC-compatible**)
— H-level from +12...36 V / 7 mA, L-level from 0...7 V / 0 mA
BTB/RTO: Relay output, max. 30 V DC or 42 V AC, 0.5 A

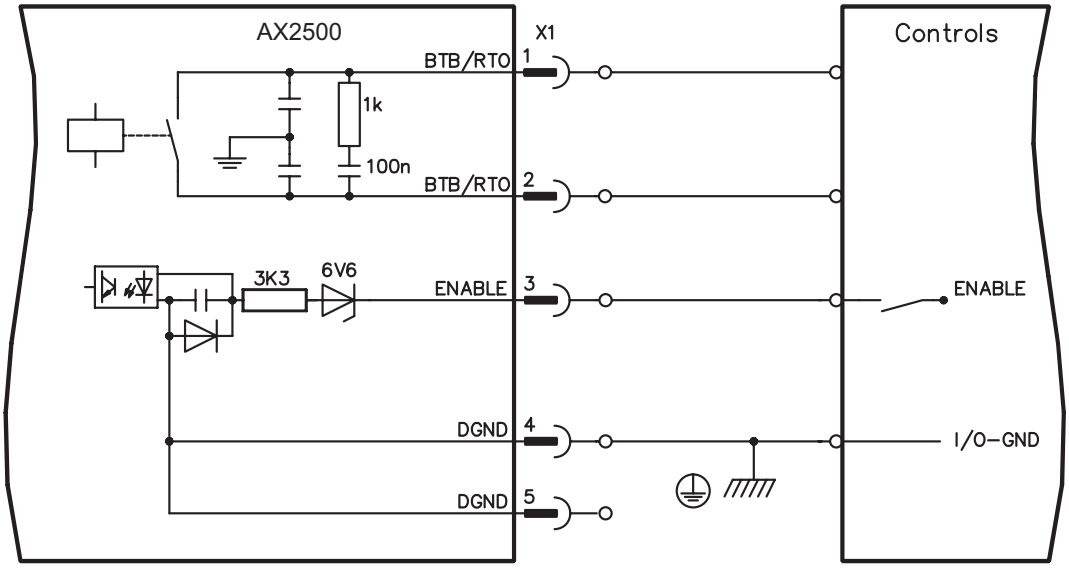

ENABLE input

The output stage of the servo amplifier is activated by the enable signal (terminal X1/3, input 24V, **active-high**).
In the inhibited state (low signal) the motor which is attached does not have any torque.

Ready-to-operate contact BTB/RTO

Operational readiness (terminals X1/1 and X1/2) is signalled via a **floating** relay contact. The contact is **closed** when all servo amplifiers in the system are ready for operation. This signal is **not** influenced by the enable signal, the I²t- limit, or the regen threshold.

All faults cause the BTB/RTO contact to open and the switch-off of the output stage (if the BTB contact is open, the output stage is disabled -> no power). A list of the error messages can be found on page 90.

8.17 RS232 interface, PC connection (X8), master only

The setting of the operating, position control, and motion-block parameters, can be carried out by using the setup software on an ordinary commercial PC.

Connect the PC interface (X8) of the servo amplifier **while the supply to the equipment is switched off** via a null-modem cable to a serial interface on the PC.

Do not use a null-modem link cable!

The interface has the same potential as the internal logic, and uses AGND as the ground reference.

The interface is selected and set up in the setup software.
Further notes can be found on page 74 .

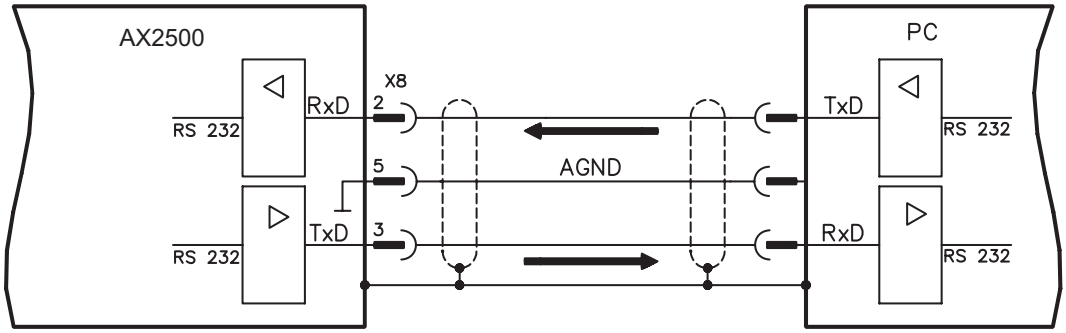

Interface cable between the PC and servo amplifiers of the AX2500 series:

(View: front view of the built-in SubD connectors, this corresponds to looking at the solder side of the SubD connector on the cable.)

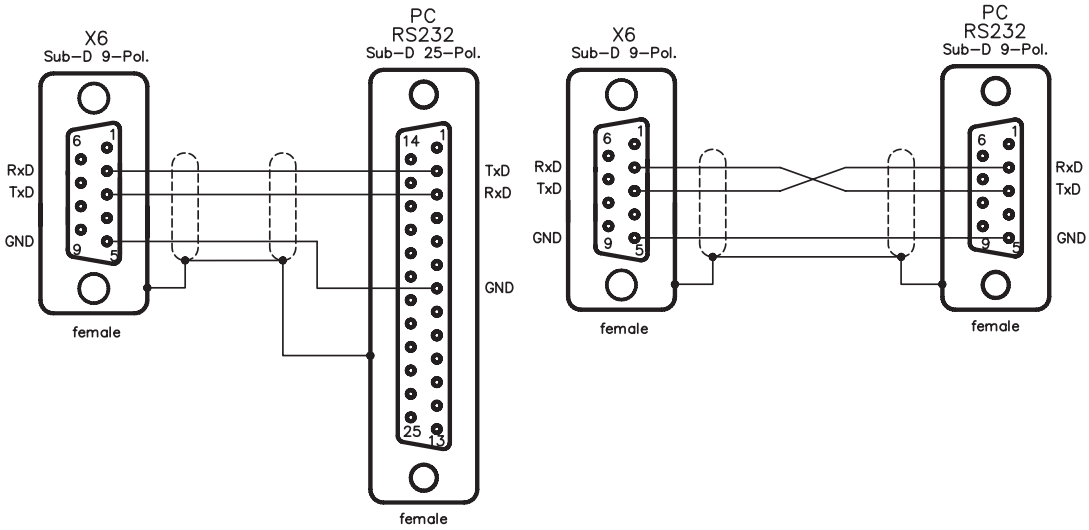

8.18 Fieldbus connection

8.18.1 CANopen interface (X7)

The interface for connection to the CAN bus (default: 500 kbps). The master is fitted with a CAN input. All axis modules in the system are connected to this through the internal bus. The last axis module has a CAN output, where the CAN bus either continues to other bus participants or is terminated by a termination resistor.

The integrated profile is based on the communication profile CANopen DS301 and the drive profile DS402. The following functions are available in connection with the integrated position controller: Jogging with variable speed, homing, start motion task, start direct task, digital setpoint provision, data transmission functions and many others. Detailed information can be found in the CANopen manual.

The interface is at the same potential as the internal logic, and uses AGND as the ground reference.

AGND must be connected to the control system ground for potential equalization!

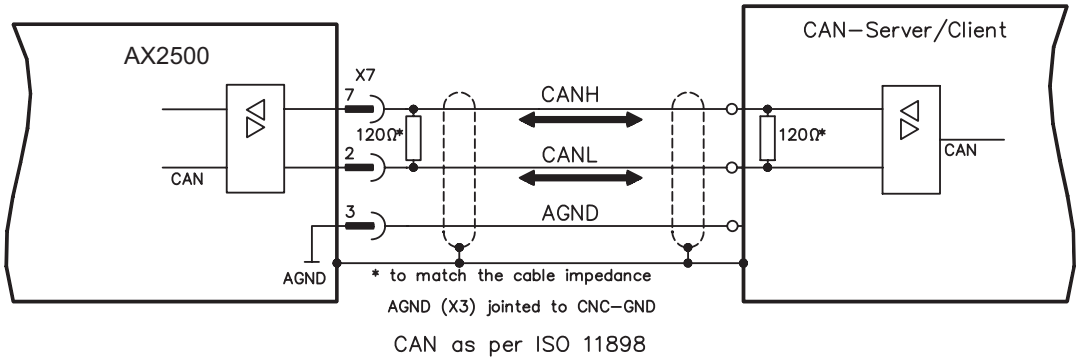

CAN bus cable

To meet ISO 11898 you should use a bus cable with a 120 Ω characteristic impedance. The maximum usable cable length for reliable communication decreases with increasing transmission speed. As a guide, you can use the following values which we have measured, but they must not be assumed to be limits:

Cable data:	Characteristic impedance	100-120 Ω
	Cable capacitance	max. 60 nF/km
	Conductor loop resistance	159.8 Ω/km

Cable length, depending on the transmission rate

Transmission rate / kbps	max. cable length / m
1000	20
500	70
250	115

Lower cable capacitance (max. 30 nF/km) and lower lead resistance (loop: 115 Ω/km) make it possible to transmit over longer distances.
(Characteristic impedance 150 ± 5 Ω ⇒ terminating resistance 150 ± 5 Ω).

For EMC reasons, the SubD connector housing must fulfill the following conditions:

— metal or metallized housing
— provision for connecting the cable shielding within the housing, large-area connections

8.18.2 PROFIBUS interface (X7), option

This section describes the PROFIBUS interface for AX2500.
Information on the range of functions and the software protocol can be found in the manual “Communication profile PROFIBUS-DP”.
The selection of cables, cable routing, shielding, bus connectors, bus termination and propagation times are described in the “Setup guidelines for PROFIBUS-DP/FMS” from PNO, the PROFIBUS User Organization.

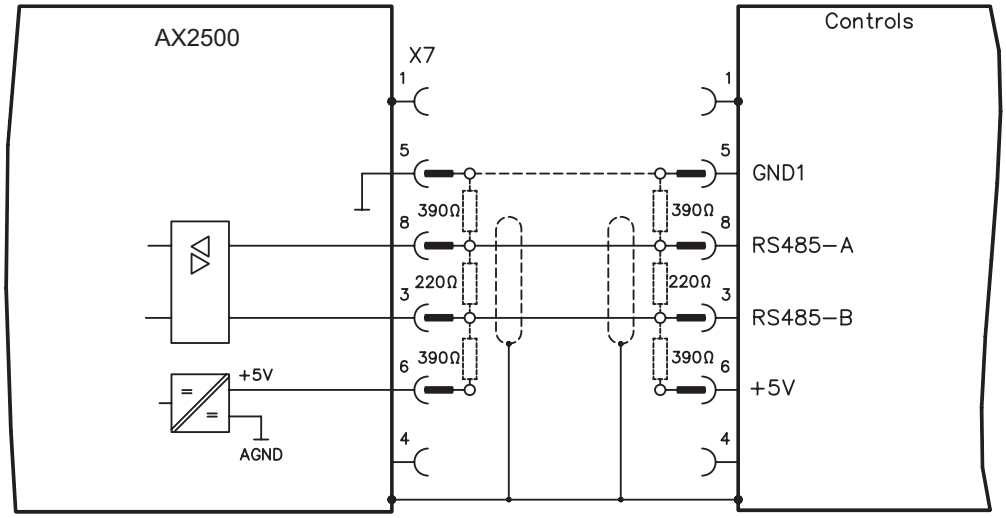

Use only identical cable types of one manufacturer.

Recommendations for 1.5 MBit/s and 3 MBit/s

1.5 MBit/s	max 32 axes per segment
3 MBit/s	max 32 axes per segment

Recommendations for 6 MBit/s and 12 MBit/s

For long-term reliability of the system with 6 MBit/s and 12 MBit/s we recommend to connect the segments with repeaters and to use one AX2500-Master per segment only (see example).

6 MBit/s	max 8 axes(1 master) per segment
12 MBit/s	max 8 axes(1 master) per segment

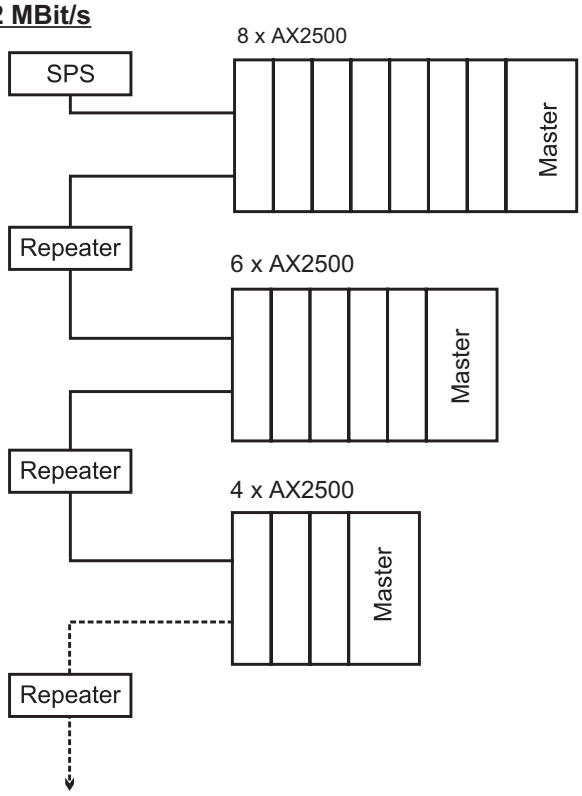

8.18.3 SERCOS interface (X7), option

This section describes the SERCOS interface of the AX2500. Information on the range of functions and the software protocol can be found in the manual “IDN Reference Guide SERCOS”.

For the fiber optic cable connection, only use SERCOS components to the SERCOS Standard IEC 61491.

8.18.3.1 Light emitting diodes (LEDs)

RT	Indicates whether SERCOS telegrams are being correctly received. In the final Communication Phase 4 this LED should flicker, since cyclical telegrams are being received.
TT	Indicates that SERCOS telegrams are being transmitted. In the final Communication Phase 4 this LED should flicker, since cyclical telegrams are being transmitted. Check the stations addresses for the controls and the servo amplifier if: - the LED never lights up in SERCOS Phase 1 or - the axis cannot be operated, although the RT LED is lighting up cyclically.
Err	Indicates that SERCOS communication is faulty or suffering from interference. If this LED is very bright, then communication is suffering strong interference, or is non-existent. Check the SERCOS transmission speed for the controls and the servo amplifier (BAUDRATE) and the fibre-optic connection. If this LED flickers, this indicates a low level of interference for SERCOS communication, or the optical transmitting power is not correctly adjusted to suit the length of cable. Check the transmitting power of the (physically) previous SERCOS station. The transmitting power of the servo amplifier can be adjusted in the setup software DRIVE.EXE on the SERCOS screen page, by altering the parameter for the cable length.

8.18.3.2 Connection diagram

Layout of the SERCOS bus system in ring topology, with optical fibre cables (schematic).

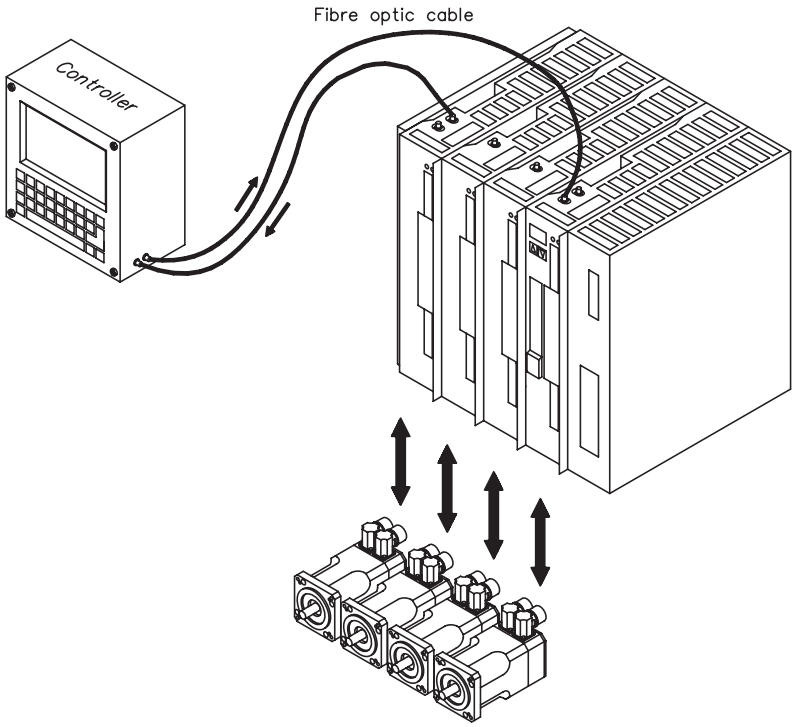

8.18.4 EtherCat interface (X7), option

This section describes the EtherCat interface of the AX2500. Information on the range of functions and the software protocol can be found in the EtherCat documentation (actually in process).

8.18.4.1 EtherCat connection, connector X7A/B (RJ-45)

Connection to the EtherCat network with RJ-45 connectors (IN and OUT interfaces).

8.18.4.2 Connection diagram

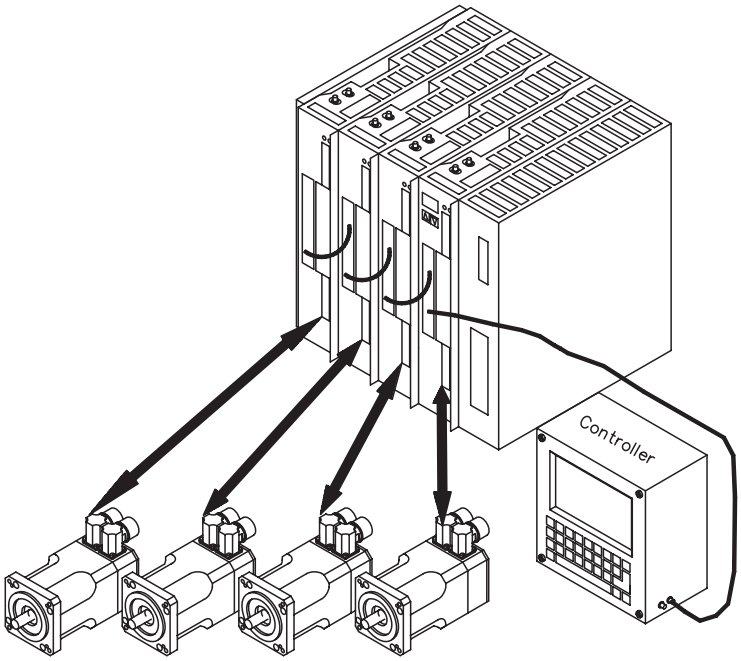

This page has been deliberately left blank.

9 Setup

9.1 Important notes

Only professional personnel with extensive knowledge in the fields of electrical engineering and drive technology are allowed to setup the servo amplifier.

The procedure for commissioning is described as an example. Depending on the application, a different procedure may be appropriate or necessary. In multi-axis systems, commission each servo amplifier individually.

Before setting up, the manufacturer of the machine must produce a hazard analysis for the machine and take appropriate measures to ensure that unforeseen movements do not result in personal injury or material damage.

Check that all connection components that are live in operation are safely protected against bodily contact. The equipment produces potentially lethal voltages up to 800 V.
Never undo the electrical connections to the servo amplifier while it is live.
Capacitors can still have dangerous residual charges up to 300 seconds after switching off the supply voltage.
The heat sink and front panel of the amplifier can reach temperatures up to 80°C in operation. Check the heat sink temperature. Wait until the heat sink has cooled down to 40°C before touching it

If the servo amplifier has been stored for longer than 1 year, then the DC Bus link capacitors will have to be re-formed.
To do this, disconnect all the electrical connections.
Supply the servo amplifier for about 30 min. from single-phase 230 V AC to the terminals L1 / L2. This will re-form the capacitors.

Further information on commissioning:
The adaptation of parameters and their effects on the control loop behaviour are described in the online help of the setup software.
The commissioning of the fieldbus interface is described in the corresponding manual.
We can provide further know-how through training courses (on request).

9.2 Setup software

9.2.1 General

This chapter describes the installation of the setup software DRIVE.EXE for the AX2500 digital servo amplifiers.

We offer training and familiarization courses on request.

9.2.1.1 Use as directed

The operator software is intended to be used for altering and storing the operating parameters for the AX2500 series of servo amplifiers. The attached servo amplifier is commissioned with the assistance of the software - during this process the drive can be controlled directly by the service functions.

WARNING !

Only professional personnel who have the relevant expertise described on page 7 are permitted to carry out online parameter setting for a drive which is running. Sets of data which are stored on data media are not safe against unintended alteration by other persons. After loading a set of data you must therefore check all parameters thoroughly before enabling the servo amplifier.

9.2.1.2 Software description

The servo amplifiers must be adapted to the requirements of your installation. Usually you will not have to carry out this parameter setting yourself on the amplifier, but on a PC, with the assistance of the operator software. The PC is connected to the servo amplifier by a null-modem (serial, ⇨ p.67) cable. The setup software provides the communication between the PC and AX2500.

You will find the setup software on the accompanying CD-ROM and in the download section of our website.

With very little effort you can alter parameters and immediately observe the effect on the drive, since there is a continuous (online) connection to the amplifier. At the same time, important actual values are read out from the amplifier and displayed on the PC monitor (oscilloscope function).

Any interface modules which may be built into the amplifier are automatically recognized, and the additional parameters which are required for position control or motion-block definition are made available.

Sets of data can be stored on data media (archived) and loaded again. You can also print out the data sets.

We provide you with motor-specific default sets of data for all the reasonable combinations of servo amplifier and motor. In most applications you will be able to use these default values to get your drive running without any problems.

An extensive online help with integrated description of all variables and functions supports you in each situation.

9.2.1.3 Hardware requirements

The PC interface (X6, RS232) of the master is connected to a serial interface on the PC by a null-modem cable (**not a null-modem link cable !**) (⇨ p.67).

Connect / disconnect the interface cable only when the supply is switched off for both the PC and the servo amplifier.

The interface in the servo amplifier is electrically isolated by an optocoupler, and is at the same potential as the CANopen interface.

Minimum requirements for the PC:

Processor	:	Pentium I or higher
Operating system	:	WINDOWS 98 / 2000 / ME / NT4.0 / XP
Graphica adapter	:	Windows compatible, color
Drives	:	Hard disk (10 MB free space) CD-ROM drive
Main memory	:	at least 8 MB
Interface	:	one free serial interface (COM1... 10)

9.2.1.4 Operating systems

WINDOWS 98 / 2000 / ME / NT / XP

DRIVE.EXE can work under WINDOWS 98 / 2000 / ME / XP or WINDOWS NT 4.0.

Emergency operation is possible with an ASCII terminal-emulation.
Interface setting: 9600 bps, databit 8, stopbit 1,no parity, no handshake

Unix, Linux

DRIVE.EXE does **not** work under Unix and Linux.

9.2.2 Installation under WINDOWS 98 / 2000 / ME / NT / XP

The CD-ROM includes an installation program for the setup software.

Installation

Insert the CD-ROM into a free drive.

Autostart activated:
The start screen of the CD-ROM pops up. Click on the link to the **Setup Software** and follow the instructions.

Autostart deactivated:
Click on **START** (task bar), then on **Run**. Enter the program call **x:\index.htm** (where x is the drive letter for the CD drive). Click on **OK** and then on the link to the **Setup Software** and follow the instructions.

Connection to the serial interface of the PC
Connect the interface cable to a serial interface on your PC and the PC interfaces (X8) of the AX2500 (⇨ p.67).

9.3 Quickstart, drive test

9.3.1 Preparation

9.3.1.1 Unpacking, Mounting and Wiring the Servo Amplifier

1. Unpack servo amplifier and accessories
2. **Observe safety instructions in the manuals**
3. Mount the servo amplifier as described in chapter 7.3
4. Wire the servo amplifier as described in chapter 8.3 or apply the minimum wiring for drive testing as described in chapter 9.3.1.3
5. Install the software as described in chapter 9.2

9.3.1.2 Documents

You need access to these documents (located on the product CD-ROM, you can download the latest editions from our website):

- Product Manual (this manual)

Depending on the installed fieldbus interface you need one of these documents:

- CANopen Communication Profile Manual
- PROFIBUS DP Communication Profile Manual
- SERCOS Communication Profile Manual
- EtherCat Communication Profile Manual (in process)

You need Acrobat Reader to read the PDFs, an installation link is on every screen of the product CD-ROM.

9.3.1.3 Minimum Wiring for Drive Test

WARNING !

This wiring does not fulfill any requirements to safety or functionality of your application, it just shows the required wiring for drive testing without load.

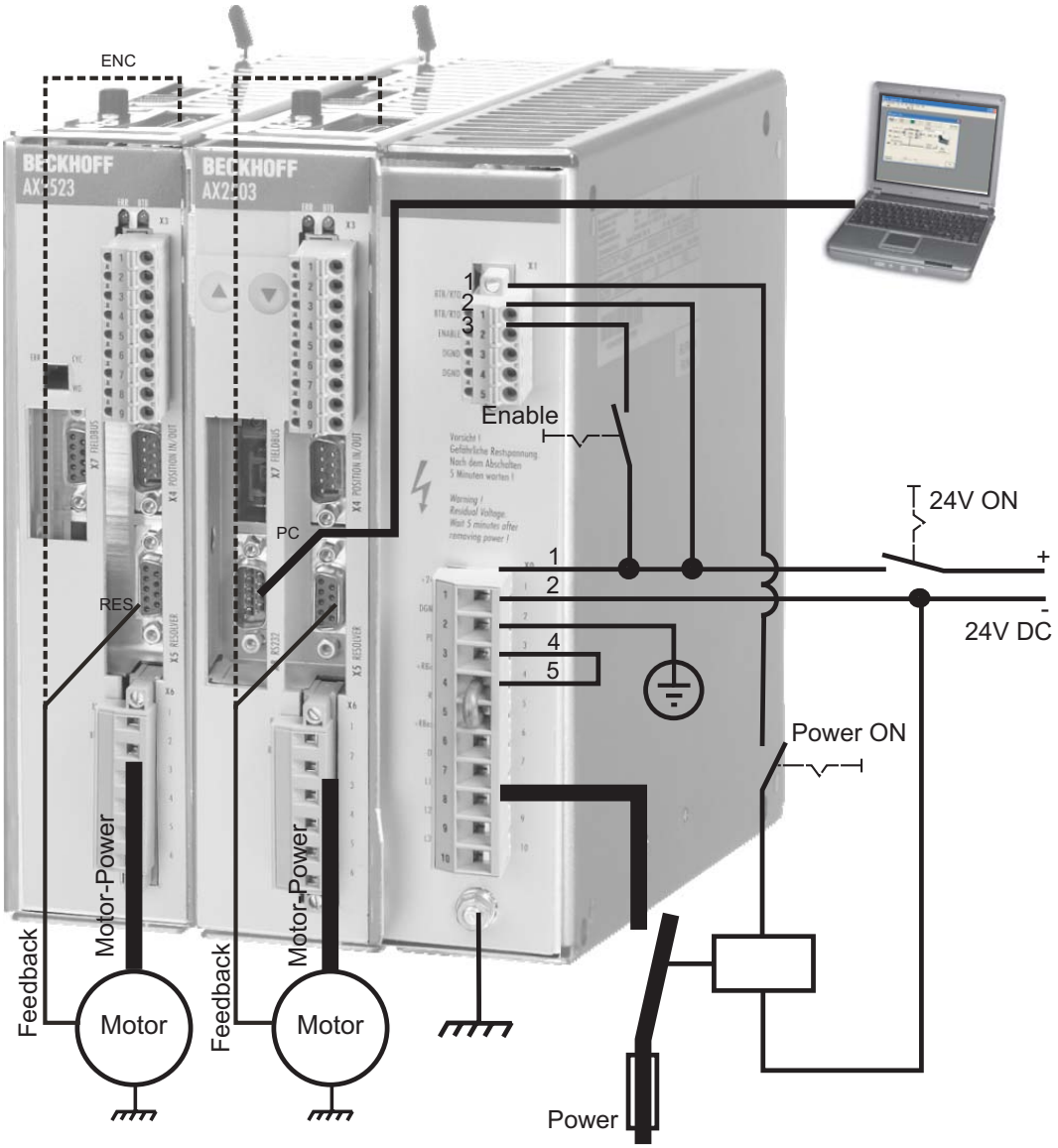

9.3.2 Connect

- Connect the interface cable to a serial interface on your PC and to the serial interface X8 of the servo amplifier. USB to serial converter can be used optionally.
- Switch on the 24 V power supply for the servo amplifier.
- Wait about 30 seconds, until the front display of the servo amplifier displays the current class (e.g. 3 for 3 A) . If the power supply voltage is switched on, too, a leading P is displayed (e.g. P3 for Power, 3 A).

If a fault code (E.) or a warning (A.) or a status message (./_ / E/S) appears in the display, you will find the description on page 90ff. If there is fault, fix the problem.

Double-Click the DRIVE.EXE icon on your Windows desktop to start the software..

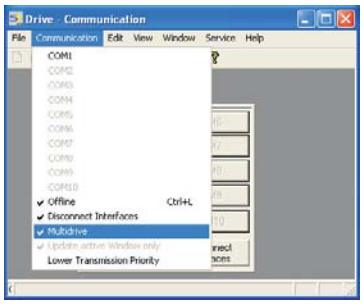

"Multidrive" must be activated in the menu "Communication"!

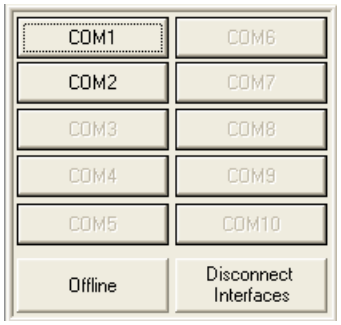

You can work offline or online with DRIVE.EXE. We work online now. Select the interface where the servo amplifier is connected to.

The software tries to communicate with the drive and to upload the parameters. If it's not successful, you receive this error message:

Frequent causes:
- wrong interface chosen
- wrong connector chosen at the servo amplifier
- interface is used by another software
- 24 V auxiliary voltage for the servo amplifier not working
- interface cable broken or wrong wiring

Click OK to remove the error message. Detect and remove the error source. Restart the software.

If communication works, the drive selection screen appears:

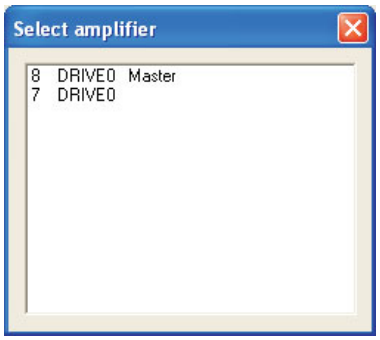

The master and axis modules, recognized in the system, with its station address and name are listed. The master module is separately characterized.
Doubleclick on the amplifier, which you want to work with.
You can select additional other axis modules later to show them in parallel at the screen and parameterize them (Multidrive function).

Now parameters are transmitted from the servoamplifier to the computer. Then you see the start screen.

Make sure, that the amplifier is disabled (Input HW-Enable connector X1 pin 3 must be 0 V or open)!

9.3.3 Important Screen Elements

Help Function

In der Online-Hilfe finden Sie detaillierte Informationen zu allen Parametern, die vom Servoverstärker verarbeitet werden können.

Key F1	Starts Online Help for the actual screen page.
Menu Bar ? / Online HTML Help	Starts Online Help with table of contents.

Tool Bar

	Save to EEPROM, required if you changed parameters.
	Reset (coldstart), required if you changed important configuration parameters.
	Operation Mode, use Digital Velocity mode for drive testing.
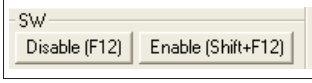	Disable and Enable of the amplifier's output stage via software.

Status Bar

9.3.4 Basic Setup

On the start screen click **"Basic Setup"** button.

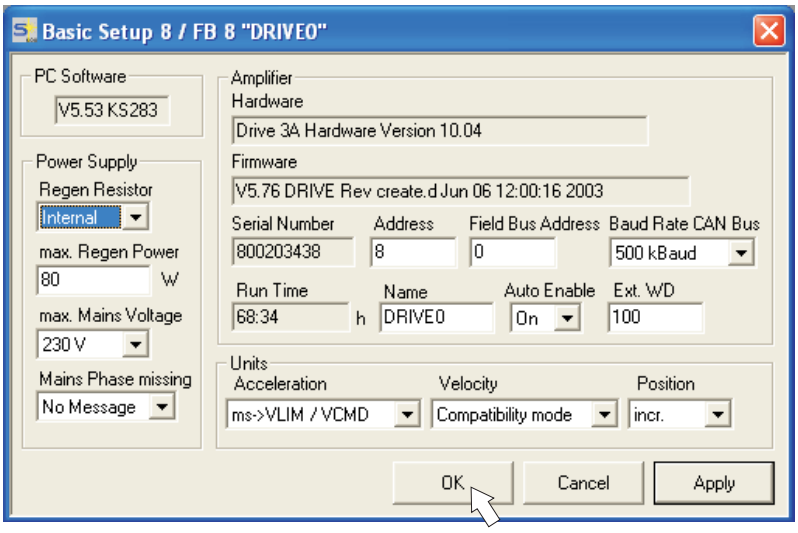

Regen Resistor: Change only if you use an external regen resistor. Most applications don't need an external regen resistor.

Max. Mains Voltage: Select the nominal mains AC voltage.

Mains Phase Missing: You can select either warning "n05" or error "F19" in case of phase loss. The setting "F19" disables the output stage, "n05" is just a message.

Units: Acceleration, Velocity, Position
Select usable units for your application referring to the moved load.

Address:
Adjust for master amplifier only (= highest address of the drive system, see p.86)

WARNING !

Leave all other fields unchanged.

Click OK. On the start screen click **"Motor"** button.

9.3.5 Motor (synchronous)

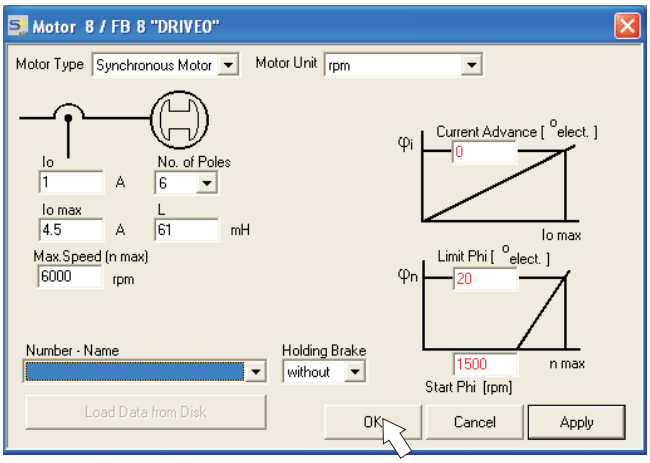

Press function key F12 (disable) before changing motor parameters.

Motor Type: Select Synchronous Motor. If you use a linear motor or an induction motor, please contact our support department.

Number-Name: Click the list to start uploading the motor parameter table, which is stored in the servo amplifier. Search and select the connected motor. If your motor is not listed, please contact our support department.

WARNING !

Leave all other fields unchanged.

Click OK.

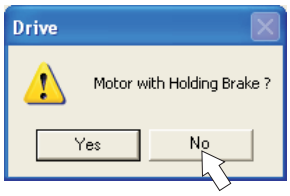

If your motor has a built-in brake, click "Yes", otherwise "No".

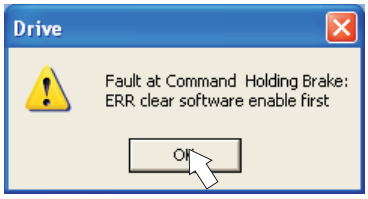

If Software Enable is active, a warning appears. You can proceed, but after the amplifier is restarted, you must check whether the holding brake configuration is correct.
Click OK.

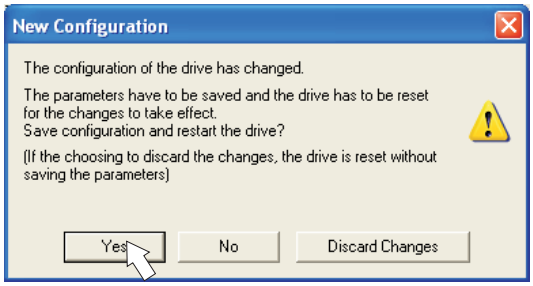

Parameters are uploaded to the amplifier's RAM now (takes some seconds). When this is done, you have to accept the changed configuration with "Yes" or to discard the changes in the appearing screen.
If you click "Yes", the parameters are saved in the EEPROM and the amplifier makes a coldstart (reset). This takes some seconds.

On the start screen, click **"Feedback"** button.

9.3.6 Feedback

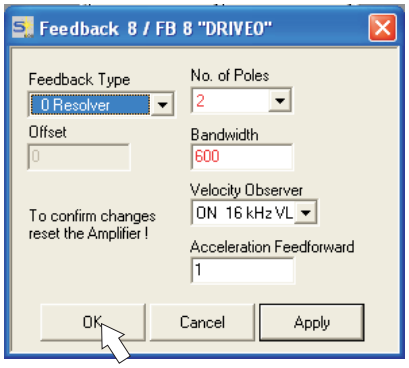

Press function key F12 (disable) before changing feedback parameters.

Feedback Type:
Select the feedback type used.
Leave all other fields unchanged.

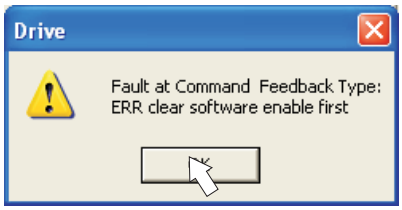

If Software Enable is active, a warning appears. The configuration change cannot be performed.
Click OK on the warnings, press F12 (SW disable) and start the Feedback procedure again.

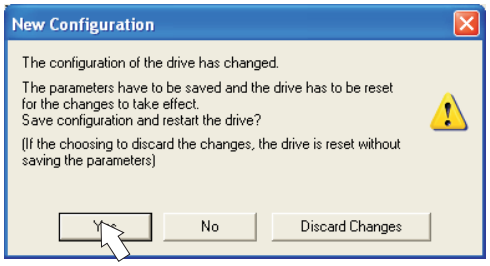

If everything was ok, the same procedure (parameter upload) that has been described for the motor selection starts.
If you click "Yes", the parameters are saved in the EEPROM and the amplifier makes a coldstart (reset). This takes some seconds.

9.3.7 Save Parameters and Restart

You are going to finish setup and you have changed several basic parameters. Depending on the parameters you changed, two possible reactions can occur:

Configuration parameters changed

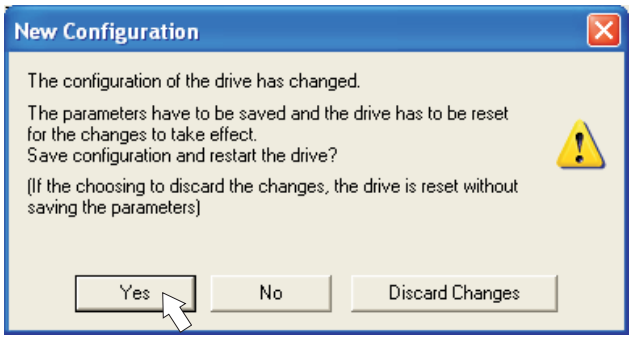

A warning appears, that you have to restart the amplifier. This is called "coldstart". Click "YES". The parameters are saved to the amplifier's EEPROM automatically and a reset command restarts the amplifier (takes a few seconds). For example, this happens after motor or feedback selection.

Other parameters changed

No warning appears. Parameters are saved in the volatile RAM only.

Save the parameters to the EEPROM of the servo amplifier manually by clicking the symbol in the tool bar. A coldstart of the amplifier is not necessary.

Reset the amplifier

You can reset the amplifier manually (e.g. in case of an error). Click the iconl .

9.3.8 Jogging the Motor (Speed Control)

Be aware that the actual position of the load permits the subsequent moving operations. The axis could move to the hardware limit-switch or the mechanical stop. Make sure that a jerk or a fast acceleration of the load cannot cause any damage.

- Switch on the power supply for the drive.
- **Hardware-Enable**: +24 VDC to Enable [connector X1 pin 3].
- **Software-Enable**: Click the "Enable" button Enable (Shift+F12) on the start screen or use key combination Shift+F12. Now, the front display shows an E and the current rating (e.g. 8.8.8. for Enable, 3 A).
- Click the icon "Oscilloscope" :

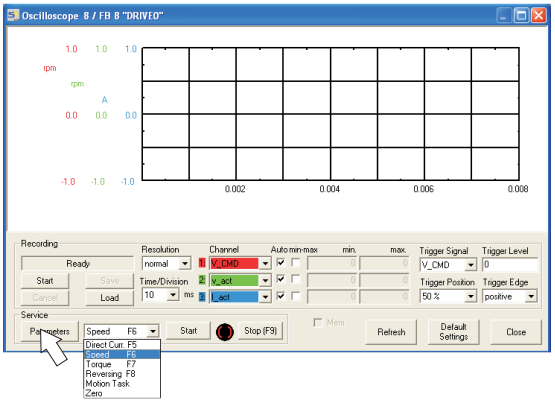

- Select Service-Mode "Speed F6", then click "Parameter" button Parameter

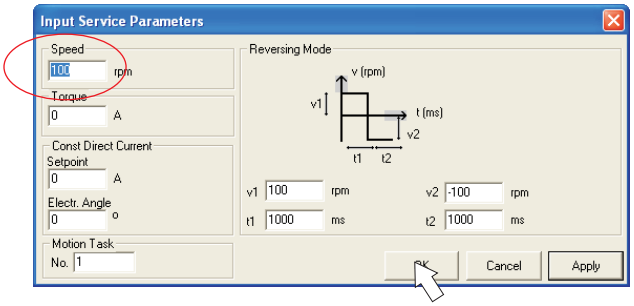

- Enter a safe speed. The sign defines the direction of movement.

Observe the "safe reduced speed" requirements for your application!

- Click OK.
- Start the service function ("Start" button or press F6).
  Click OK on the warning notice.
  The opmode is switched to "0" and the output stage is enabled automatically.

  The symbol's color changes to green as long as the function is active.
- **The function is active until you click the "Stop" button or press F9.**
- **The output stage can be disabled by pressing function key F12.**

9.3.9 Status

Actual warnings and errors are listed on the **Status** screen, which can be accessed on the start screen by clicking the "Status" button. This button monitors the current status of the amplifier and can appear with different text.

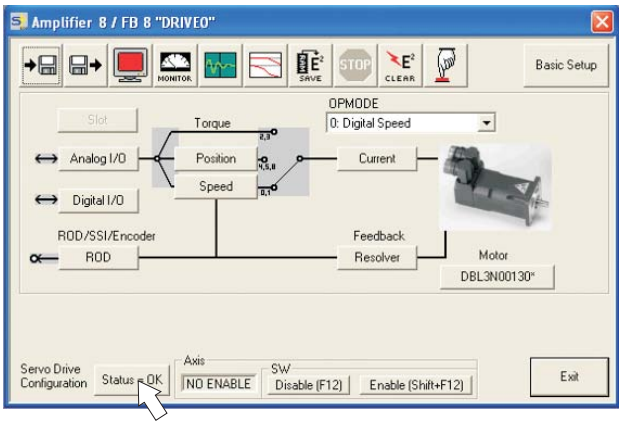

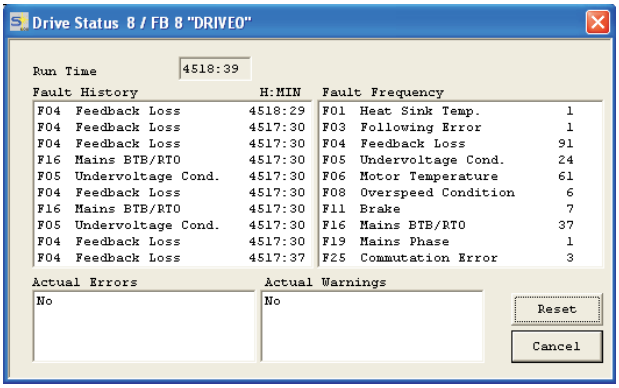

The Reset button can be used to clear some actual error messages. A description of errors/warnings can be found on p. 90.

Now you have setup and tested the basic functions of the drive successfully.

9.3.10 Monitor

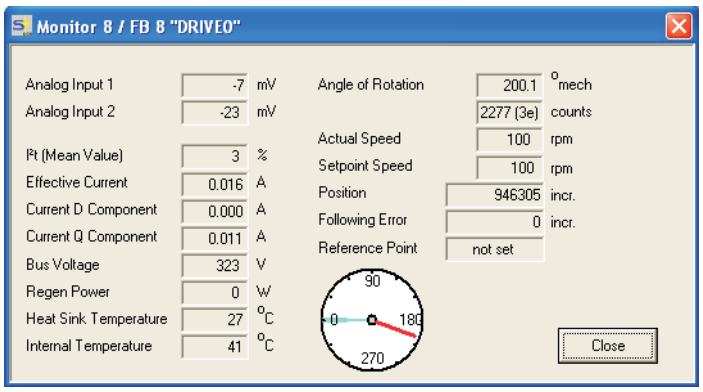

Click the icon "Monitor"

The Monitor screen shows all important electrical and mechanical actual values.

9.3.11 Additional Setup Parameters

Detailed information on all setup functions can be found in the Online Help systemand and the integrated command reference.

9.4 Multi-axis systems

All the axes in a system can be parameterized through the RS232 interface in the master. To do this, there is an internal connection between the master and the axis modules. The PC cable only has to be connected to the master.
The internal address assignment is carried out automatically, so that it is only necessary to set up the basic station address for the master.

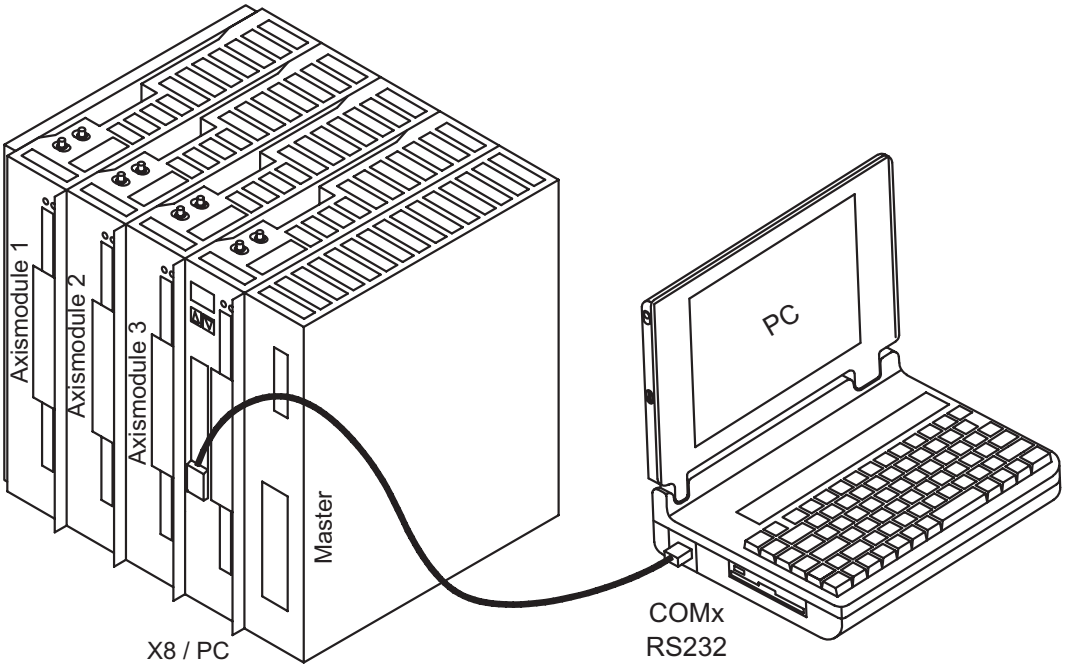

9.4.1 Station Address

Adjust the address of the master with the setup software. The addresses of the axis modules are then assigned automatically.

After changing the station address it is necessary to turn off the 24 V auxiliary supply, and then turn it on again.

Starting at the master, descending addresses are assigned automatically to the axis modules. The following table shows an example with one master and three axis modules according to the graphics above:

Axis	Address	Remark
Master	10	Master address, set by user
Axis module 3	9	assigned automatically
Axis module 2	8	
Axis module 1	7	

The highest permitted master address is 128. When choosing the master address, please consider that at least address 1 will be assigned to the last (leftmost) axis module.
In CAN and PROFIBUS field bus systems the automatically assigned addresses must not match the address of other nodes.

9.4.2 Example of connections for multi-axis system

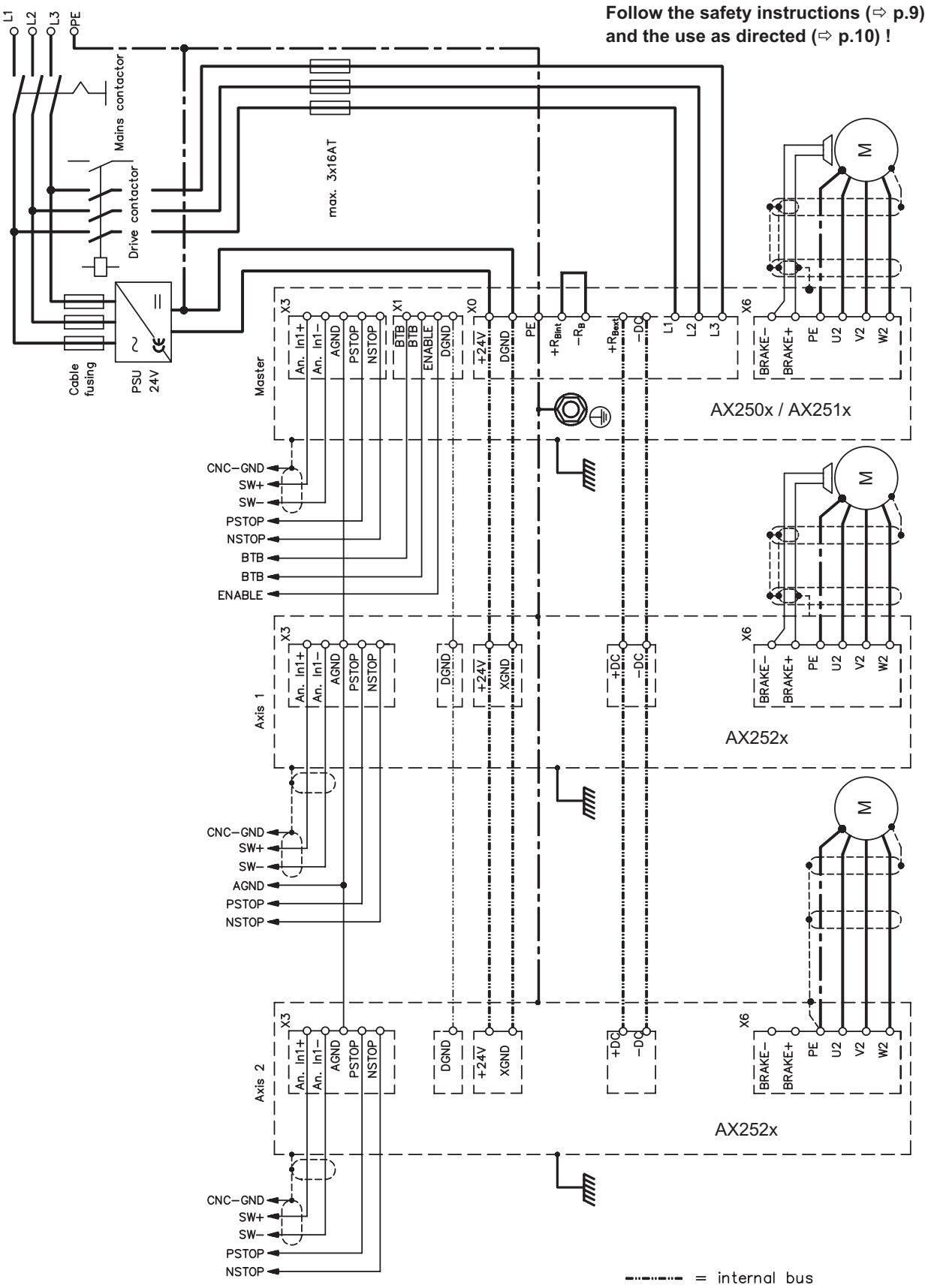

9.5 Key pad controls and status displays

Two keys are fitted in the operating panel of the master. Here you can enter the basic address for the system and call up status information on all the axes that are connected.

9.5.1 Operating

The two keys can be used to perform the following functions:

Key symbol	Functions
▲	**press once :** go up one menu item, increase number by one **press twice in rapid succession** : increase number by ten
▼	**press once :** go down one menu item, decrease number by one **press twice in rapid succession** : decrease number by ten
▲ ▼	**press and hold right key, then press left key as well :** enters a number, return function

9.5.2 Status display on the axis module

Each axis module is fitted with 2 LEDs that provide a quick indication of the instrument status.

LED		
red	**green**	**Interpretation**
lit	off	axis is not ready for operation (fault)
blinking	off	a warning has been generated
off	lit	axis is ready for operation, and enabled
off	blinking	axis is ready for operation, but not enabled
blinking	blinking	axis is selected for editing by the master

A detailed display of the warnings and faults can be called up in the display on the master (⇨ p.89).

9.5.3 Status display on the master

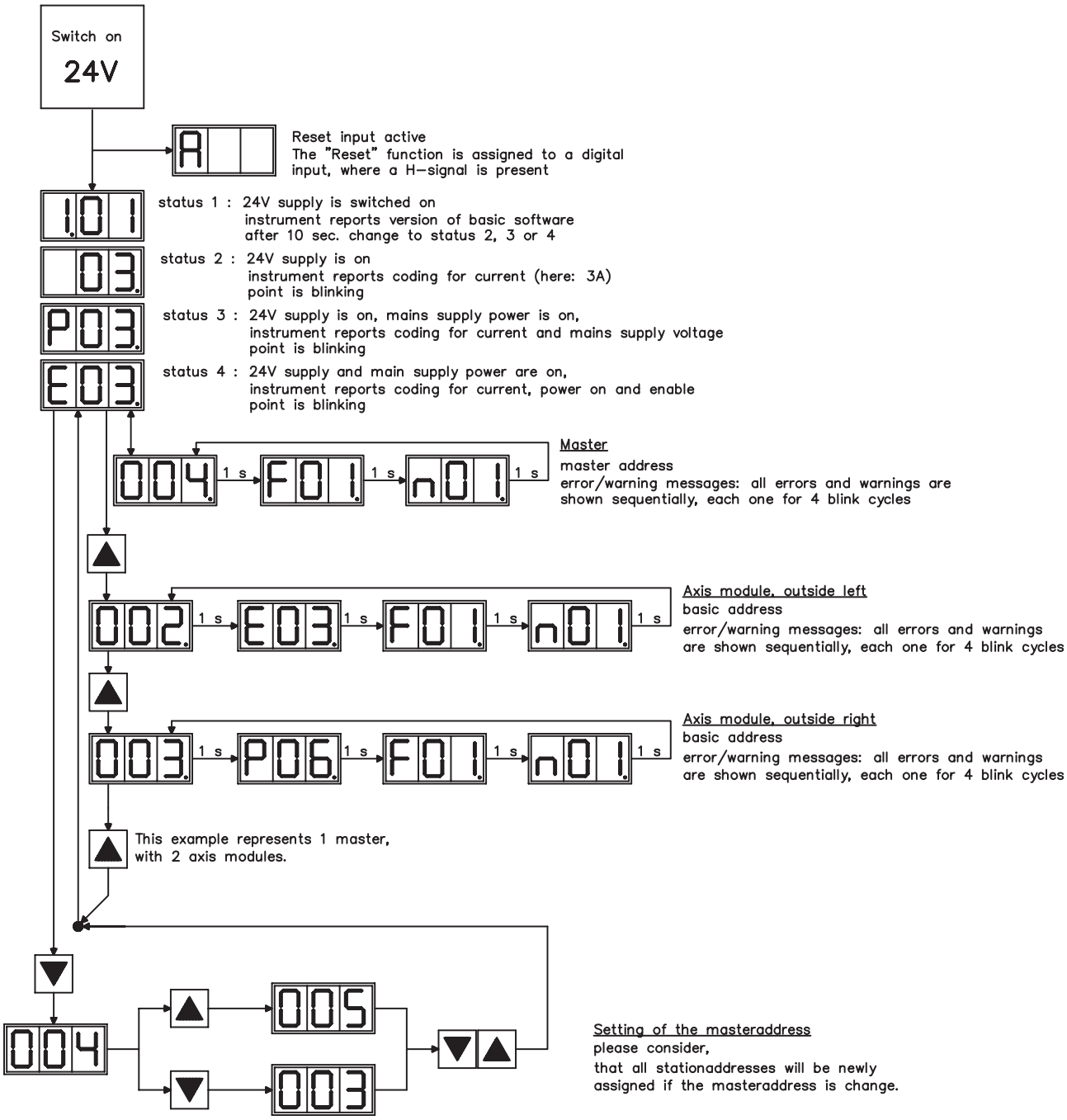

9.6 Error messages

Any errors that occur are shown in coded form by an error number in the LED display on the front panel. All error messages result in the BTB/RTO contact being opened, the output stage being switched off (motor loses all torque), and the holding brake is activated.

Number	Designation	Explanation
A/I/P/E	Status Messages	Status messages, no error, see p. 89
. . .	Status Message	Updating the startup configuration
F00	no error	no error on the selected axis module
F01*	Heat sink temperature	Heat sink temperature too high limit is set by manufacturer to 80°
F02*	Overvoltage	Overvoltage in DC bus link limit depends on the electrical supply voltage
F03*	Following error	Message from the position controller
F04	Feedback	Cable break, short-circuit, short to ground
F05*	Undervoltage	Undervoltage in DC bus link limit is set by manufacturer to 100V
F06	Motor temperature	Motor temperature too high or temp. sensor defect limit is set by manufacturer to 145°C
F07	Internal voltage supply	Internal amplifier supply voltages are out of tolerance
F08*	Overspeed	Motor runs away, speed is too high
F09	EEPROM	Checksum error
F10	Flash-EPROM	Checksum error
F11	Brake	Cable break, short-circuit, short to ground
F12	Motor phase	Motor phase missing (cable break or similar)
F13*	Internal temperature	Internal temperature too high
F14	Output stage	Fault in the power output stage
F15	I^2t max.	I^2t maximum value exceeded
F16*	Supply BTB/RTO	2 or 3 phases missing in the mains supply feed
F17	A/D converter	Error in the analog-digital conversion, normally caused by extreme electromagnetic interferences.
F18	Regen	Regen circuit faulty or incorrect setting
F19*	Supply phase	A phase is missing in the mains supply power feed
F20	Slot fault	Slot error (hardware fault on interface card)
F21	Handling error	Software error on the interface card
F22	reserved	reserved
F23	CAN-bus off	Severe CAN bus communication error
F24	Warning	Warning is displayed as fault
F25	Commutation error	Commutation error
F26	Limit switch	Homing error (hardware limit switch activated)
F27	reserved	reserved
F28	External Trajectory	External position profile generator created a step, that exceeded the maximum value
F29	Sercos Error	only in SERCOS systems
F30	Emergency timeout	Timeout emergency stop
F31	Macro	Macro program error
F32	System Error	system software not responding correctly

* = these error messages can be cleared without a reset, by using the ASCII command CLRFAULT. If only one of these errors is present and the RESET button or the I/O RESET function is used, only the CLRFAULT command will be executed.

More information to the messages can be found in the ASCII Object Reference (Online Help), see parameter ERRCODE. Hints for removal can be found in the Online help chapter "Trouble-Shooting".

9.7 Warning messages

Faults which occur, but which do not cause a switch-off of the amplifier output stage (BTB/RTO contact remains closed), are indicated in the LED display on the front panel by a coded warning number.

Number	Designation	Explanation
A/I/P/E	Status Messages	Status messages, no error, see p. 89
. . .	Status Message	Updating the startup configuration
n01	I²t	I²t threshold exceeded
n02	Regen power	Reached preset regen power limit
n03*	S_fault	Exceeded preset following error limit
n04*	Response monitoring	Response monitoring (fieldbus) has been activated
n05	Supply phase	Mains supply phase missing
n06*	SW limit switch 1	Underrun software limit switch 1
n07*	SW limit switch 2	Overrun software limit switch 2
n08	Motion task error	A faulty motion task was started
n09	No reference point	No reference point (Home) set at start of motion task
n10*	PSTOP	PSTOP limit-switch activated
n11*	NSTOP	NSTOP limit-switch activated
n12	Motor default values loaded	Only for ENDAT or HIPERFACE® : discrepancy between motor number saved in the encoder and the amplifier, motor default values loaded
n13*	reserved	reserved
n14	SinCos feedback	SinCos commutation (wake & shake) not completed, will be canceled when amplifier is enabled and wake & shake carried out
n15	Table error	Fault according to speed/current table INXMODE 35
n16	Summarized warning	Summarized warning for n17 to n31
n17	Fielbus Synchronization	The mode synchronization SYNCSRC is selected but the drive isn't in synchronies cycle
n18	Multiturn overrun	Using Multiturn encoder feedback, an overrun over the maximum number of resolutions was detected
n19	Motion task ramps are limited	Range overflow on motion task data
n20	Wrong GMT data	Wrong "Graphical Motion Task" data
n21	PLC program error	For details see plc code
n22	max. motor temperatur reached	The user can shut down the process before the temperature eror will interrupt the process immediately
n23...n31	reserved	reserved
n32	firmware beta version	Firmware is an unreleased beta version

* = these warning messages result in a controller shut-down of the drive (braking by emergency stop ramp)

More information to the messages can be found in the ASCII Object Reference (Online Help), see parameter STATCODE. Hints for removal can be found in the Online help chapter "Trouble-Shooting".

9.8 Trouble Shooting

Depending on the conditions in your installation, there may be a wide variety of reasons for the fault. In multi-axis systems there may be further hidden causes of a fault.

Detailled hints for removal of faults can be found in the Online help chapter "Trouble-Shooting".

Our customer support can give you further assistance with problems.

Fault	possible causes	Measures to remove the fault
HMI message: communication fault	— wrong cable used — cable plugged into wrong position in servo amplifier or PC — wrong PC interface selected	— use null-modem cable — plug cable into the correct sockets on the servo amplifier and PC — select correct interface
motor does not rotate	— servo amplifier not enabled — break in setpoint cable — motor phases swapped — brake not released — drive is mechanically blocked — no. of motor poles set incorrectly — feedback set up incorrectly	— apply enable signal — check setpoint cable — correct motor phase sequence — check brake control — check mechanism — set no. of motor poles — set up feedback correctly
motor oscillates	— gain too high (speed controller) — shielding in feedback cable has a break — AGND not wired up	— reduce Kp (speed controller) — replace feedback cable — join AGND to CNC-GND
drive reports following error	— I_{rms} or I_{peak} is set to low — setpoint ramp is too long	— increase I_{rms} or I_{peak} (keep within motor data !) — shorten setpoint ramp +/-
motor overheating	— I_{rms}/I_{peak} set too high	— reduce I_{rms}/I_{peak}
drive too soft	— Kp (speed controller) too low — Tn (speed controller) too high — PID-T2 too high — T-Tacho too high	— increase Kp (speed controller) — use motor default value for Tn (speed controller) — reduce PID-T2 — reduce T-Tacho
drive runs roughly	— Kp (speed controller) too high — Tn (speed controller) too low — PID-T2 too low — T-Tacho too low	— reduce Kp (speed controller) — use motor default value for Tn (speed controller) — increase PID-T2 — increase T-Tacho
axis drifts at setpoint = 0V	— offset not correctly adjusted for analog setpoint provision — AGND not joined to the CNC-GND of the controls	— adjust setpoint-offset (analog I/O) — join AGND and CNC-GND

10 Appendix

10.1 Glossary

C	clock	Clock signal
	common-mode voltage	The maximum amplitude of a disturbance (on both inputs) which a differential input can eliminate
	continuous power of regen circuit	Mean power which can be dissipated in the regen circuit
	counts	Internal count pulses, 1 pulse = $1/2^{20}$ $turn^{-1}$
	current controller	Regulates the difference between the current setpoint and the actual value to 0 Output : power output voltage
D	DC Bus link	Rectified and smoothed power voltage
	disable	Removal of the enable signal (0 V or open)
E	earth short	electrical connection between a phase and the protective earth (PE)
	enable	Enable signal for the servo amplifier (+24 V)
F	fieldbus interface	CANopen, PROFIBUS, SERCOS, EtherCat
	free convection	Free movement of air for cooling
G	GRAY-code	Special format for representing binary numbers
H	holding brake	Brake in the motor, which should only be used when the motor is at standstill
I	I^2t threshold	Monitoring of the r.m.s. current that is actually required
	incremental encoder interface	Position signalling by 2 signals with 90° phase difference, not an absolute position output
	input drift	Temperature and age-dependent alteration of an analog input
	Ipeak, peak current	The effective value of the peak current
	Irms, effective current	The r.m.s. value of the continuous current
K	Kp, P-gain	Proportional gain of a control loop
L	limit speed	Maximum value for speed normalization at ±10 V
	limit-switch	Switch limiting the traverse path of the machine; implemented as n.c. (break) contact
M	machine	The complete assembly of all connected parts or devices, of which at least one is movable
	motion-block	Set of all the position control parameters which are required for a motion task
	multi-axis system	Machine with several driven axes
N	natural convection	Free movement of air for cooling
O	optocoupler	Optical connection between two electrically independent systems

P	P-controller	Control loop with purely proportional behaviour
	phase shift	Compensation for the lag between the electro-magnetic and magnetic fields in the motor
	PID-controller	Control loop with proportional, integral and differential behaviour
	PID-T2	Filter time constant for the speed controller output
	position controller	Regulates the difference between the position setpoint and the actual position to 0 Output : speed setpoint
	potential isolation	electrically decoupled
	power contactor	System protection device with phase monitoring
	pulse power of the regen circuit	Maximum power which can be dissipated in the regen circuit
R	regen circuit	Converts superfluous energy, which is fed back during braking, into heat in the regen resistor
	reset	New start of the microprocessor
	reversing mode	Operation with a periodic change of direction
	ROD-interface	Incremental position output
S	servo amplifier	Control device for regulating the speed, torque and position of a servomotor
	setpoint ramps	Limits for the rate of change of the speed setpoint
	short-circuit	here: electrically conductive connection between two phases
	speed controller	Regulates the difference between the speed setpoint and the actual value to 0 Output : current setpoint
	SSI-interface	Cyclic-absolute, serial position output
	supply filter	Device to divert interference on the power supply cables to PE
T	T-tacho, tachometer time constant	Filter time constant in the speed feedback of the control loop
	tachometer voltage	Voltage proportional to the actual speed
	thermostat	Temperature-sensitive switch built into the motor winding
	Tn, I-integration time	Integral section of a control loop
Z	zero pulse	Output once per turn from incremental encoders, used to zero the machine

10.2 Index

! 24V aux. supply, interface 47

A Abbreviations 8
Ambient conditions 20

B BISS interface 51
Block diagram 43
Brake 21
BTB/RTO 66

C CANopen interface 68
CE conformity 12
Commissioning 73
Conductor cross-sections 20
Connector assignments 44
Control signals 63

D DC Bus link, interface 48
Dimensions 35
Display, LED 20
Disposal 13

E Earthing
installation 38
wiring diagram 45
Enclosure protection 20
Encoder
interface 52
interface Master-Slave 56
Encoder emulations 61
Error messages 90
EtherCat interface 71

F Fan 36
Fieldbus interface 68
Forming 73
Fusing 19

G Glossary 93
Ground symbol 39
Grounding system 22
Guide
electrical installation 38
mechanical installation 33

H Hall, interface 54
Hardware requirements 75

I Incremental encoder, interface 55
Inputs
ANALOG IN 63
DIGI-IN 1/2 64
enable 66
encoder 52
Encoder for Master Slave 56
NSTOP 64
power supply 47
PSTOP 64
resolver 50
Installation
electrical 37
mechanical 33
software 75

K Key operation 88

L Leakage current 31
LED display 88
Limit-switch inputs 64

M Maintenance 13
Master-Slave 56
Motor, interface 48
Mounting 34
Mounting position 20
Multi-axis systems
connection example 87
parameterization 86

N Nameplate 14
Noise emission 20
NSTOP, interface 64

O Operating systems 75
Options 17
Outputs
BTB/RTO 66
DIGI-OUT 1/2 65
encoder emulations 61

P Package supplied 14
Packaging 13
Part number scheme 15
PC connection 67
PC interface cable 67
Pollution level 20
PROFIBUS interface 69
PSTOP, interface 64
Pulse/direction, interface 59

Q Quickstart, drive test 76

R regen circuit 22
Regen circuit 22
Regen resistor
external interface 48
techn. data 22
Resolver 50
ROD, interface 61
RS232/PC, interface 67

S Safety instructions 9
SERCOS interface 70
Setpoint input 63
Setup software 74
Shield connection 40
Shielding
installation 38
wiring diagram 45
Sine-cosine encoder, interface 53
Site altitude 20
SSI, interface 62
Stacking height 13
Standards 11
Status display 88
Storage 13
Supply connection, interface 47
Supply voltage 20
Switch on/off behavior 23
Symbols 7
System components, summary 42

T Technical data 18
ambient conditions 20
cables 41
conductor cross sections 20
connections. 19
fusing 19
rated data 18
tightening torques 19
Technical description. 16
Tightening torques, connectors 19
Transport 13
Trouble shooting 92

U Use as directed
servo amplifier 10
setup software 74

V Ventilation
installation 33
techn. data 20
Vibrations 20

W Warning messages. 91
Wiring 39
Wiring diagram
axis module. 46
master 45

This page has been deliberately left blank.