T9G series, DC coil 30A PCB Relay

- **30A switching in NO and 20A in CO**
- **Minimum Board space (29mm x 21.5mm)**
- **Meets UL 508 for clearance / creepage**
- **Meets IEC 61810-1 for reinforced insulation**
- **Option for load connections via 0.250" (6.3mm) quick connect terminals**
- **4kV dielectric withstand and 8kV surge voltage between coil & contacts**
- **UL approved for 480 VAC switching**

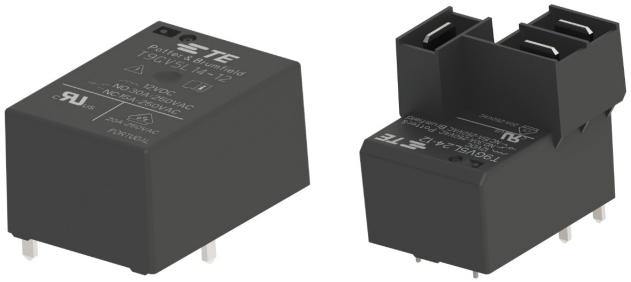

Typical applications
HVAC, Appliances, Industrial Controls, Energy Management

Approvals

UL 508; UL Listing #E214025
IEC 61810-1; VDE Listing #40045012
Technical data of approved types on request

Contact Data

Contact arrangement	1 form A (NO), 1 form B (NC), 1 form C (CO)		
Rated voltage		250VAC	
Max. switching voltage		480VAC	
Rated current	30A	20A	20A
Contact material		AgSnO	
Min. recommended contact load		1A, 12VAC/VDC	
Initial contact resistance		300mΩ at 100mA/6VDC	
Frequency of operation, with/without load		360 cycles / hour = with 3600 cycles / hour = without	
Operate/release time max., including bounce		15/22ms	

Contact ratings [1)]

UL 508

Type	Load	Cycles
NO	5A, 480VAC, General Purpose	$6x10^3$
NO	15,6A, 480VAC, Resistive	$100x10^3$
NO	30A, 277VAC, General Purpose, 85°C	$100x10^3$
NO	18A, 250VAC, Resistive, 105°C	$100x10^3$
NO	22A, 250VAC, Resistive	$250x10^3$
NO	22A FLA, 98A LRA, 120VAC, Definite Purpose	$100x10^3$
NO	14A FLA, 82A LRA, 250VAC, Definite Purpose, 70°C	$30x10^3$
NO	20A, 277VAC, Standard Ballast	$6x10^3$
NO	1HP, 125VAC	$100x10^3$
NC	15A, 240VAC, General Purpose	$100x10^3$
NC	20A, 250VAC, Resistive (CO type only)	$20x10^3$
NC	30A LRA / 12A FLA, 250VAC, Definite Purpose	$30x10^3$
NC	1HP, 277VAC (CO type only)	$50x10^3$

Contact ratings [1)] (continued)

Type	Load	Cycles
CO	20A, 250VAC, Resistive	$15x10^3$
CO	20A /10A, 240VAC, Resistive	$100x10^3$
CO	30A / 15A Resistive, 250VAC	$20x10^3$
CO	30A FLA / 80A LRA (N.O.); 12A FLA, 30A LRA (N.C.) 250VAC, Definite Purpose	$30x10^3$
CO	80A LRA / 10A FLA (N.O.); 33A LRA / 10A FLA (N.C.) 250VAC, Definite Purpose	$30x10^3$

IEC 61810-1

Type	Load	Cycles
NO	30A, 250VAC, Resistive, 85°C (PCB)	$75x10^3$
NO	20A, 250VAC, Resistive, 70°C (QC), 85°C (PCB)	$100x10^3$
NO	17A, 250VAC, Resistive, 105°C	$100x10^3$
NO	20A, 250VAC, Resistive, 85°C	$100x10^3$
NO	12A (12A), 250VAC, 60°C (per EN60730-1)	$150x10^3$
NC	10A, 250VAC, Resistive, 60°C (C.O. type only)	$50x10^3$
CO	20A, 250VAC, Resistive, 60°C (N.C.)	$10x10^3$
CO	20A/10A, 250VAC, Resistive, 60°C (N.O.)	$50x10^3$
CO	12A , 250VAC, Resistive, 85°C	$100x10^3$

1) Contact ratings at 40°C (unless otherwise noted) with relay properly vented. **Remove vent nib after soldering and cleaning.**

Mechanical endurance	$10x10^6$ ops.

Coil Data

Coil voltage range	5 to 110VDC
Max. coil power	110% of nominal
Max. coil temperature	155°C
Coil insulation system according UL	Class F

Coil versions, DC coil

Coil code	Rated voltage VDC	Operate voltage VDC	Release voltage VDC	Coil resistance Ω±10%	Rated coil power mW
5	5	3.75	0.5	28	900
9	9	6.75	0.9	90	900
12	12	9	1.2	160	900
15	15	11.25	1.5	249	900
18	18	13.5	1.8	360	900
22	22	16.5	2.2	538	900
24	24	18	2.4	640	900
48	48	36	4.8	2,560	900
110	110	82.5	11	13,444	900

All figures are given for coil without preenergization, at ambient temperature +23°C.

1) Contact ratings at 40°C (unless otherwise noted) with relay properly vented. **Remove vent nib after soldering and cleaning.**

11-2017, Rev. 1117
www.te.com
© 2017 Tyco Electronics Corporation,
a TE Connectivity Ltd. company

Datasheets and product specification according to IEC 61810-1 and to be used only together with the 'Definitions' section.

Datasheets and product data is subject to the terms of the disclaimer and all chapters of the 'Definitions' section, available at http://relays.te.com/definitions

Datasheets, product data, 'Definitions' section, application notes and all specifications are subject to change.

T9G series, DC coil 30A PCB Relay (Continued)

Coil Data (continued)

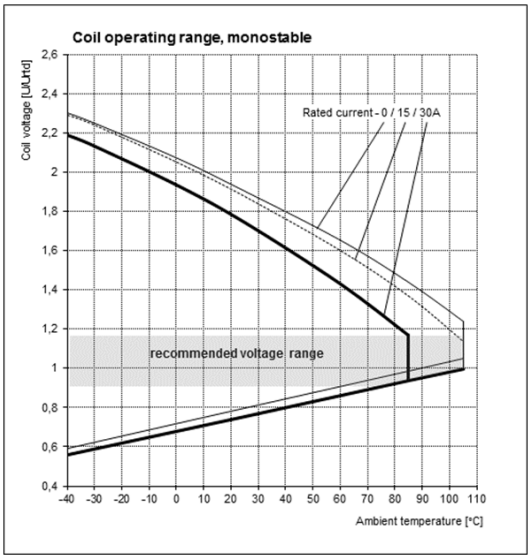

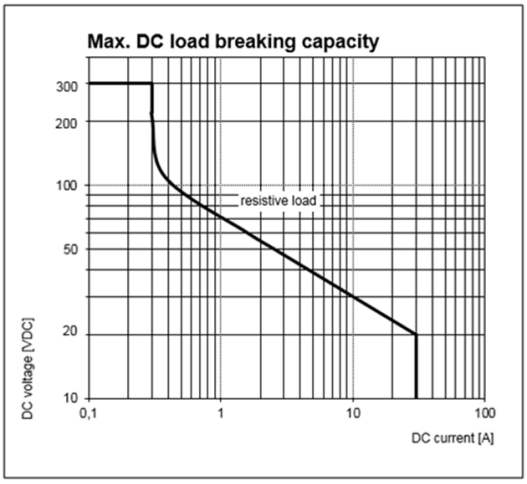

Insulation Data

Initial dielectric strength	
between open contacts	1500V_{rms}
between contact and coil	4000V_{rms}
Initial surge withstand voltage	
between contact and coil	8kV
Initial insulation resistance	
between insulated elements	1x10^{9}Ω, 500VDC
Clearance/creepage	
between contact and coil	6.4mm / 9.5mm (UL), 8mm / 8mm (IEC)

Other Data

Material compliance:	EU RoHS/ELV, China RoHS, REACH, Halogen content refer to the Product Compliance Support Center at www.te.com/customersupport/rohssupportcenter
Ambient temperature	
DC coil	Storage -55°C to +130°C Operating -40 to + 105°C at reduced current
Category of environmental protection	
IEC 61810	RTII - flux proof RTIII - wash tight
Vibration resistance (functional)	Opening NO contact >10g Opening NC contact >7g
Shock resistance (functional)	10g for 11msec
Shock resistance (destructive)	100g
Terminal type	pcb-tht and pcb-tht + quick connect
Weight	18g mounting code 1 23g mounting code 2
Resistance to soldering heat THT	
IEC 60068-2-20	250°C
Packaging/unit	10/tube, 420/box (PCB + QC), 500/box (PCB)

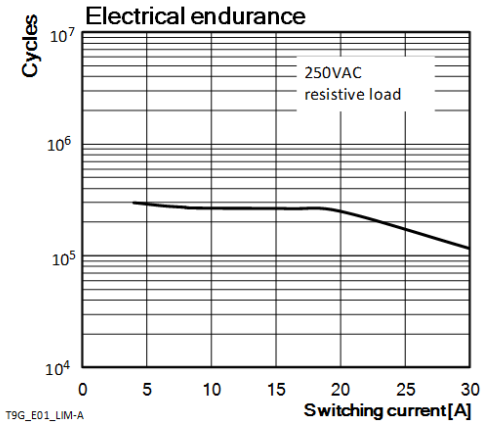

PCB layout
Bottom view on pins
T9G - Mounting and termination code 1

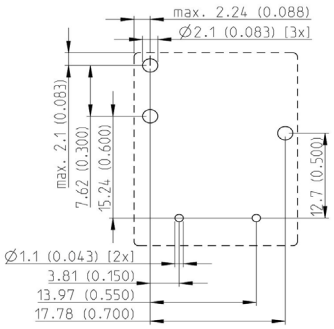

Only necessary terminals are present on single throw models. Consequently, some holes will be unnecessary for single throw models.

T9G - Mounting and termination code 2

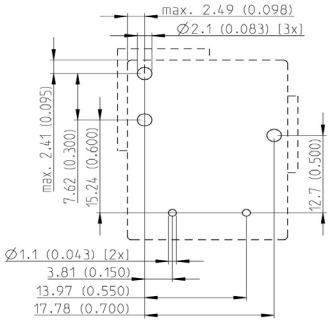

Only necessary terminals are present on single throw models. Consequently, some holes will be unnecessary for single throw models.

11-2017, Rev. 1117
www.te.com
© 2017 Tyco Electronics Corporation,
a TE Connectivity Ltd. company

Datasheets and product specification according to IEC 61810-1 and to be used only together with the 'Definitions' section.

Datasheets and product data is subject to the terms of the disclaimer and all chapters of the 'Definitions' section, available at http://relays.te.com/definitions

Datasheets, product data, 'Definitions' section, application notes and all specifications are subject to change.