Installation Instructions

SLC 500 Power Supplies

Catalog Numbers 1746-P1, 1746-P2, 1746-P3, 1746-P4, 1746-P5, 1746-P6, 1746-P7

http://literature.rockwellautomation.com/idc/groups/literature/documents/in/1746-in004_-mu-p.pdf

FR	Cette publication est disponible en français sous forme électronique (fichier PDF). Pour la télécharger, rendez-vous sur la page Internet indiquée ci-dessus.
IT	Questa pubblicazione è disponibile in Italiano in formato PDF. Per scaricarla collegarsi al sito Web indicato sopra.
DE	Diese Publikation ist als PDF auf Deutsch verfügbar. Gehen Sie auf die oben genannte Web-Adresse, um nach der Publikation zu suchen und sie herunterzuladen.
JP	本書は PDF ファイルとして日本語でも公開しています。日本語版の閲覧およびダウンロードについては、上記のウェブアドレスをご参照下さい

Publication 1746-IN004B-EN-P - March 2008

Important User Information

Solid state equipment has operational characteristics differing from those of electromechanical equipment. Safety Guidelines for the Application, Installation and Maintenance of Solid State Controls (publication SGI-1.1 available from your local Rockwell Automation sales office or online at http://literature.rockwellautomation.com) describes some important differences between solid state equipment and hard-wired electromechanical devices. Because of this difference, and also because of the wide variety of uses for solid state equipment, all persons responsible for applying this equipment must satisfy themselves that each intended application of this equipment is acceptable.

In no event will Rockwell Automation, Inc. be responsible or liable for indirect or consequential damages resulting from the use or application of this equipment.

The examples and diagrams in this manual are included solely for illustrative purposes. Because of the many variables and requirements associated with any particular installation, Rockwell Automation, Inc. cannot assume responsibility or liability for actual use based on the examples and diagrams.

No patent liability is assumed by Rockwell Automation, Inc. with respect to use of information, circuits, equipment, or software described in this manual.

Reproduction of the contents of this manual, in whole or in part, without written permission of Rockwell Automation, Inc., is prohibited.

Throughout this manual, when necessary, we use notes to make you aware of safety considerations.

WARNING	Identifies information about practices or circumstances that can cause an explosion in a hazardous environment, which may lead to personal injury or death, property damage, or economic loss.
IMPORTANT	Identifies information that is critical for successful application and understanding of the product.
ATTENTION	Identifies information about practices or circumstances that can lead to personal injury or death, property damage, or economic loss. Attentions help you to identify a hazard, avoid a hazard, and recognize the consequences.
SHOCK HAZARD	Labels may be on or inside the equipment, for example, a drive or motor, to alert people that dangerous voltage may be present.
BURN HAZARD	Labels may be on or inside the equipment, for example, a drive or motor, to alert people that surfaces may reach dangerous temperatures.

Installation Instructions

SLC 500 Power Supplies

Catalog Numbers 1746-P1, 1746-P2, 1746-P3, 1746-P4, 1746-P5, 1746-P6, 1746-P7

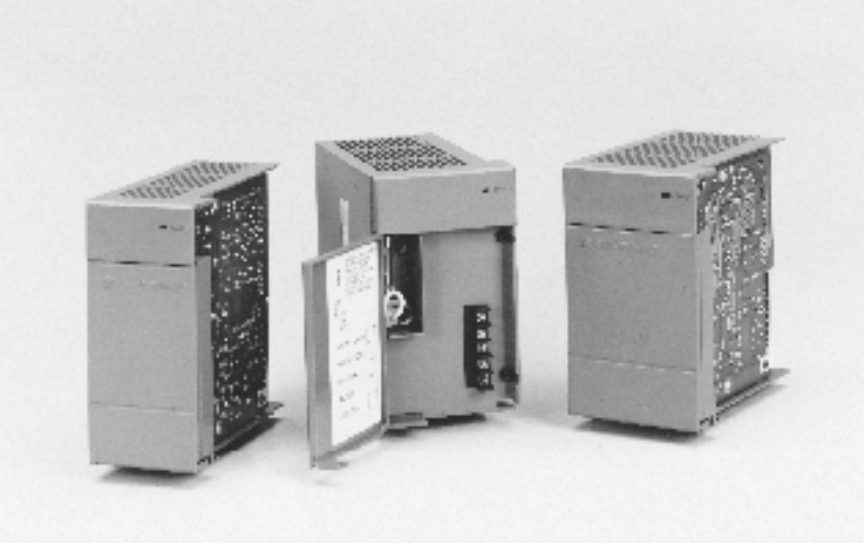

Publication 1746-IN004B-EN-P - March 2008

ATTENTION

Environment and Enclosure

This equipment is intended for use in a Pollution Degree 2 industrial environment, in overvoltage Category II applications (as defined in IEC publication 60664-1), at altitudes up to 2000 m (6561 ft) without derating.

This equipment is considered Group 1, Class A industrial equipment according to IEC/CISPR Publication 11. Without appropriate precautions, there may be potential difficulties ensuring electromagnetic compatibility in other environments due to conducted as well as radiated disturbance.

This equipment is supplied as open type equipment. It must be mounted within an enclosure that is suitably designed for those specific environmental conditions that will be present and appropriately designed to prevent personal injury resulting from accessibility to live parts. The interior of the enclosure must be accessible only by the use of a tool. Subsequent sections of this publication may contain additional information regarding specific enclosure type ratings that are required to comply with certain product safety certifications.

See NEMA Standards publication 250 and IEC publication 60529, as applicable, for explanations of the degrees of protection provided by different types of enclosure. Also, see the appropriate sections in this publication, as well as the Allen-Bradley Industrial Automation Wiring and Grounding Guidelines, publication 1770-4.1, for additional installation requirements pertaining to this equipment.

Overview

Install your power supply using these installation instructions. The only tools you require are flat head (1/8”) and Phillips head (1/4”, #2) screwdrivers.

ATTENTION

Electrostatic discharge can damage integrated circuits or semiconductors if you touch backplane connector pins. Follow these guidelines when you handle the power supplies.

- Touch a grounded object to discharge static potential.
- Do not touch the backplane connector or connector pins.
- Do not touch circuit components inside the power supply.
- Use a static-safe work station, if available.
- Keep the power supplies in their static-shield packaging when not in use.

IMPORTANT

If the equipment is not installed and used as described in this manual, the protection provided by the equipment may be impaired.

Hazardous Location Considerations

Products marked CL1, DIV 2, GP A, B, C, D are suitable for use in Class I, Division 2, Groups A, B, C, D or nonhazardous locations only. Each product is supplied with markings on the rating nameplate indicating the hazardous location temperature code. When combining products within a system, the most adverse temperature code (lowest T number) may be used to help determine the overall temperature code of the system. Combinations of equipment in your system are subject to investigation by the local authority having jurisdiction at the time of installation.

WARNING

EXPLOSION HAZARD

- Do not disconnect equipment unless power has been removed or the area is known to be nonhazardous.
- Do not disconnect connections to this equipment unless power has been removed or the area is known to be nonhazardous. Secure any external connections that mate to this equipment using screws, sliding latches, threaded connectors, or other means provided with this product.
- Substitution of components may impair suitability for Class I, Division 2.
- All wiring must comply with N.E.C. article 501-4(b).

Environnements dangereux

Les produits marqués « CL 1, DIV 2, GP A, B, C, D » ne conviennent qu'à une utilisation en environnements de Classe I, Division 2, Groupes A, B, C, D dangereux et non dangereux. Chaque produit est livré avec des marquages sur sa plaque d'identification qui indiquent le code de température pour les environnements dangereux. Lorsque plusieurs produits sont combinés dans un système, le code de température le plus défavorable (code de température le plus faible) peut être utilisé pour déterminer le code de température global du système. Les combinaisons d'équipements dans le système sont sujettes à inspection par les autorités locales qualifiées au moment de l'installation.

WARNING

DANGER D'EXPLOSION

- Coupez l'alimentation ou vérifiez que l'environnement est classé non dangereux avant de débrancher l'équipement.
- Coupez l'alimentation ou vérifiez que l'environnement est classé non dangereux avant de débrancher les connecteurs. Fixez tous les connecteurs externes reliés à cet équipement à l'aide de vis, loquets coulissants, connecteurs filetés ou autres moyens fournis avec ce produit.
- La substitution de composants peut rendre cet équipement impropre à une utilisation en environnement de Classe I, Division 2.
- Le câblage doit être conforme à l'article 501-4(b) du code national de l'électricité aux Etats-Unis et aux réglementations locales en vigueur.

Install the Chassis Interconnect Cable (optional)

To connect up to three SLC 500 chassis together, install the chassis interconnect cable before installing the power supply.

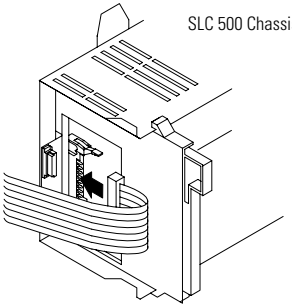

For more information, see the SLC 500 Modular Hardware Style User Manual, publication 1747-UM011.

Power Supply Installation

1. Align the circuit board of the power supply with the card guides on the left side of the chassis.

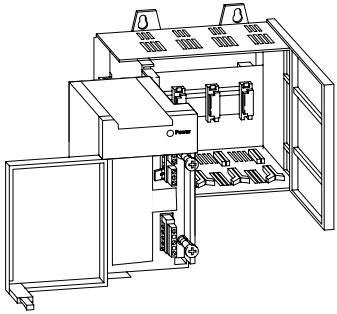

2. Slide the power supply in until it is flush with the chassis. Then fasten the power supply to the chassis.

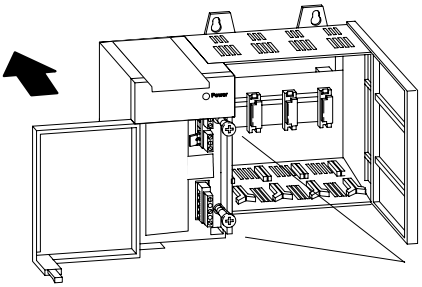

Use these screws to fasten the power supply to the chassis with 1.2 Nm (11 lb-in) torque, max.

Power Supply Wiring

TIP

For more information on wiring, see Allen-Bradley Programmable Controller Grounding and Wiring Guidelines, publication 1770-4.1.

Refer to publication 1746-IN016, for chassis installation and grounding requirements.

1. Place the input voltage jumper to match the input voltage. (This does not apply to the 1746-P3, 1746-P5, 1746-P6, and 1746-P7 power supplies, which do not have a jumper.)

ATTENTION

Set the input jumper before applying power. Hazardous voltage is present on exposed pins when power is applied; contact with the pin may cause injury to personnel.

WARNING

If you connect or disconnect the wiring to the terminal blocks or if you insert or remove the power supply while power is on, an electrical arc can occur. This could cause an explosion in hazardous location installations. Be sure that power is removed or the area is nonhazardous before proceeding.

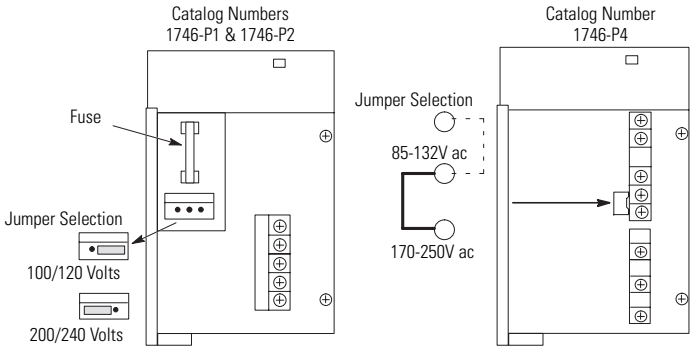

2. Connect the ground screw of the power supply to the nearest ground or ground bus. Use a 1.68 mm (#14 AWG) 75° Copper wire (Category 1 per Industrial Automation Wiring and Grounding Guidelines, publication 1770-4.1) and keep the leads as short as possible. The 1746-P4 is shown below.

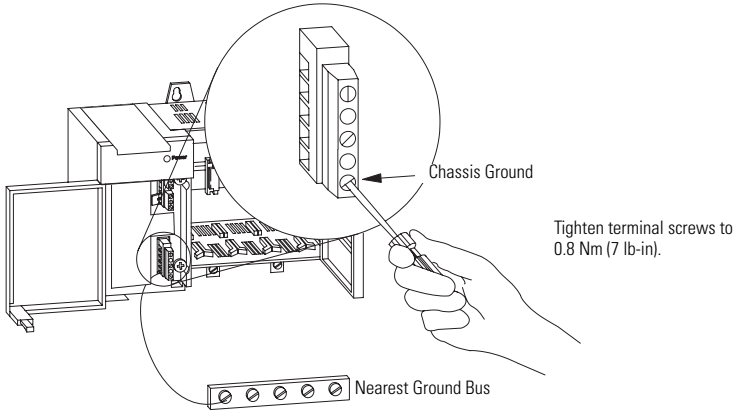

3. Refer to page 11 for special wiring considerations for the 1746-P3.

4. Connect incoming power. See illustration on page 10.

ATTENTION

Turn off incoming power before connecting wires; failure to do so could cause injury to personnel and/or equipment.

Use 1.68 mm (#14 AWG) Copper wire. Tighten terminal screws to 0.8 Nm (7 lb-in).

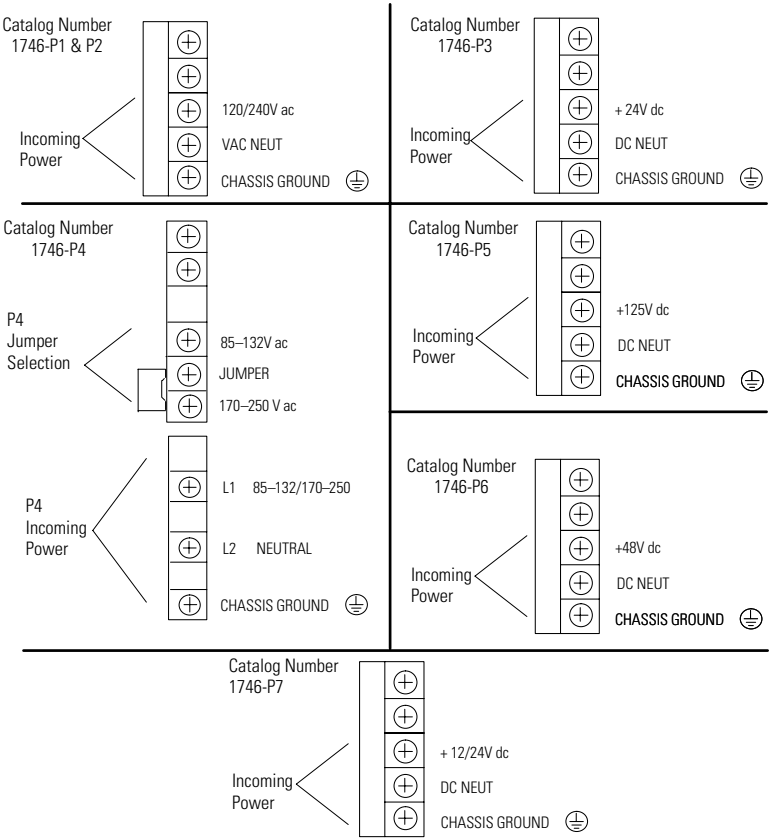

ATTENTION

Your SLC 500 power supply can be damaged by voltage surges when switching inductive loads such as motors, motor starters, solenoids, and relays. To avoid damage to your SLC 500 power supply in these applications, use an isolation transformer to isolate the power supply from harmful voltage surges.

1746-P3 Wiring Considerations

This information describes special wiring considerations for the 1746-P3 power supply that are not labeled as revision (REV) B.

ATTENTION

Any voltage applied to the 1746-P3 DC NEUT terminal will be present at the SLC logic ground and the processor DH-485 port. To prevent unwanted potentials across the logic ground of the controller and/or damage to the SLC chassis, the DC NEUTRAL terminal of the external DC power source must be either isolated from the SLC chassis ground or connected to earth ground as shown in the following illustration.

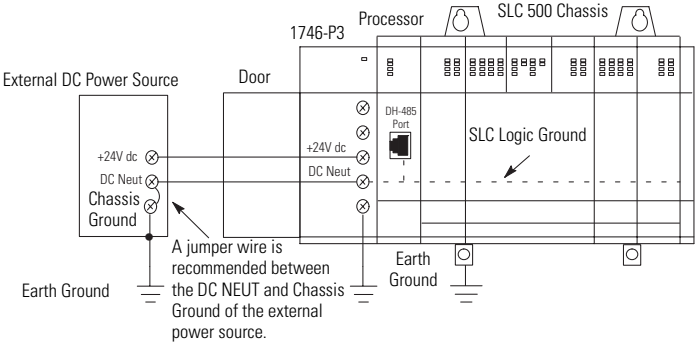

IMPORTANT

SLC 500 series A chassis (1746-A4, 1746-A7, 1746-A10, and 1746-A13) manufactured **before** November 1992 have a resistor between the logic ground and chassis ground as the drawing on the following page illustrates. This resistor could be damaged if the wiring recommendation described within the attention box above is not followed. See the figure on the following page for the location of the resistor. SLC 500 series A chassis (1746-A4, 1746-A7, 1746-A10, and 1746-A13) with a manufacture date of November 1992 or later do not have this resistor. SLC 500 series B chassis have a 1 MΩ resistor that limits the current between logic ground and chassis ground.

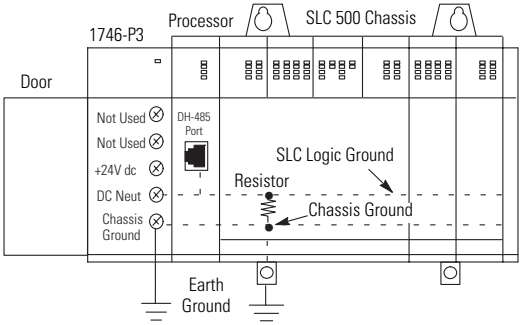

5. **(Optional)** For the 1746-P1, 1746-P2, 1746-P4, 1746-P5, and 1746-P6 power supplies, use PWR OUT +24V dc and PWR OUT COM terminals to power 24V dc sensors and loads. The terminals on the 1746-P1, 1746-P2, 1746-P5, and 1746-P6 power supplies provide an isolated, non-fused 200 mA, 24V dc power supply. The terminals on the 1746-P4 power supply provide an isolated, non-fused 1A, 24V dc power supply. (The 1746-P3 and 1746-P7 power supplies do not provide for an external power source.)

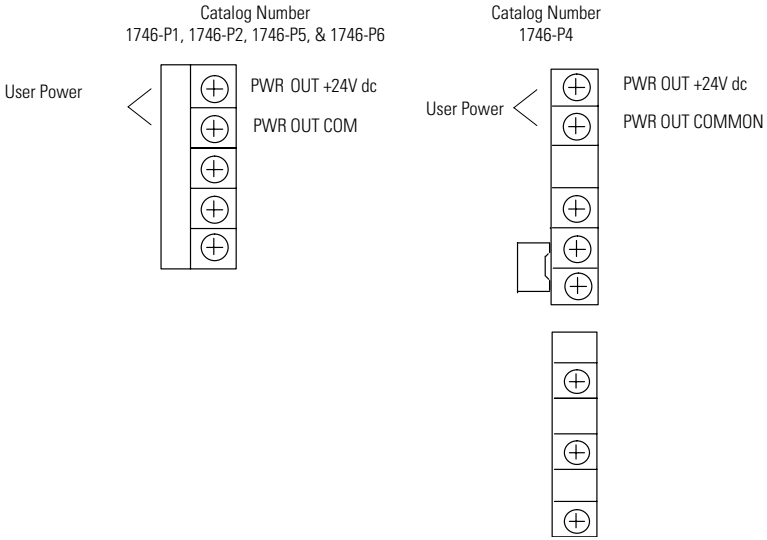

SLC 500 Operation with 24V dc User-power Overcurrent Condition

Cat. No.	SLC Operation	Recovery Procedure
1746-P1 series A (made in Japan)	Power supply shutdown, CPU Fault	Reload user program
1746-P1 series A (made in Malaysia-current production)	24V dc user shutdown, CPU continues	Correct overcurrent condition
1746-P2 series A, B	Power supply shutdown, CPU Fault	Reload user program
1746-P2 series C	24V dc user shutdown, CPU continues	Correct overcurrent condition
1746-P4 series A	Power supply shutdown, CPU Fault	Reload user program
1746-P5 series A	24V dc user shutdown, CPU continues	Correct overcurrent condition
1746-P6 series A	24V dc user shutdown, CPU continues	Correct overcurrent condition

ATTENTION

For 1746-P1 (made in Malaysia), 1746-P2 series C, 1746-P5 series A, and 1746-P6 series A power supplies, monitor the 24V dc user output with a 24V dc input channel to avoid unexpected operation due to 24V dc user power shutdown.

6. Remove the protective label.

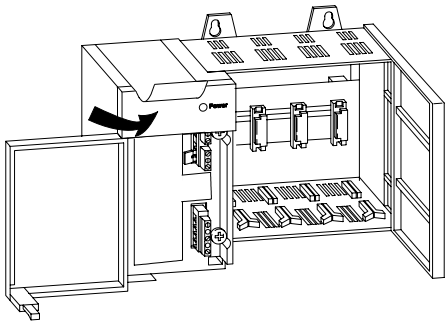

Power Supply Undervoltage Operation

SLC 500 controllers continue to operate (hold-up) for a short period of time if the input voltage to the power supply drops below the recommended operating voltage range. The controller continues to scan the user program and control I/O during this time. CPU hold-up for each power supply is shown on pages 14 and 16.

SLC 500 controllers turn OFF (stop scanning and disable outputs) if input voltage to the power supply is removed or drops below the recommended operating range for a period exceeding the CPU hold-up time. The controller resumes operation automatically when the input voltage is restored to normal.

If the input voltage to the 1746-P7 power supply falls into a range of 4 to 9V for a period exceeding the CPU hold-up time, the controller turns OFF and will not turn back ON until input voltage is increased to 11V dc.

General Specifications (1746-P1, 1746-P2, 1746-P3, and 1746-P4)

Attribute	Value			
	1746-P1	**1746-P2**	**1746-P3**	**1746-P4**
Line voltage	85...132/170...265V ac 47...63 Hz		19.2...28.8V dc	85...132/ 170...250V ac 47...63 Hz
Typical line power requirement	135VA	180VA	90VA	150VA
Inrush current, max	20 A			45 A
Internal current capacity	2 A at 5V dc 0.46 A at 24V dc	5 A at 5V dc 0.96 A at 24V dc	3.6 A at 5V dc 0.87 A at 24V dc	10.0 A at 5V dc 2.88 A at 24V dc(1)
Fuse protection(2)	1746-F1 or equivalent(3) (4)	1746-F2 or equivalent(3) (5)	1746-F3 or equivalent(3) (6)	Fuse is soldered in place.
24V dc user-power current capacity	200 mA		Not applicable	1 A(1)
24V dc user-power voltage range	18...30V dc			20.4...27.6V dc
User-supplied overcurrent protection(7), max	15 A		Not applicable	15 A
Temperature, ambient operating	0...60 °C (32...140 °F) Current capacity is derated 5% above 55 °C (131 °F).			0...60 °C (32...140 °F) no derating
Isolation(8)	1800V ac RMS for 1 s		600V ac RMS for 1 s (version B or later)	2600V dc for 1 s
CPU hold-up time(9)	20 ms (full load) 3000 ms (no load)		5 ms (full load) 1000 ms (no load)	20 ms (full load) 3000 ms (no load)

Attribute	Value			
	1746-P1	**1746-P2**	**1746-P3**	**1746-P4**
Certification (when product is marked)	UL Listed Industrial Control Equipment for Class 1, Division 2, Groups A, B, C, D Hazardous Locations			UL Listed Industrial Control Equipment
	C-UL Listed Industrial Control Equipment for Class 1, Division 2, Groups A, B, C, D Hazardous Locations			CSA Certified Process Control Equipment for Class 1, Div 2, Groups A, B, C, D Hazardous Locations
	CE(10) European Union 89/336/EEC EMC Directive, compliant with: EN 50082-2 Industrial Immunity EN50081-2 Industrial Emissions European Union 73/23/EEC LVD Directive, compliant with: EN61131-2 Programmable Controllers			
	C-Tick Australian Radiocommunications Act, compliant with: AS/NZS 2064 Industrial Emissions			

(1) The combination of all output power (5V backplane, 24V backplane, and 24V user source) cannot exceed 70 W.

(2) Power supply fuse is intended to guard against fire hazard due to short-circuit conditions. This fuse may not protect the supply from miswiring or excessive transient in the power line.

(3) Fuse sizes specified are for end-devices only. Fuse size may need to be reduced depending on the size of circuit wiring.

(4) Equivalent fuses: 250V-3A fuse, nagasawa ULCS-61ML-3, or BUSSMAN AGC 3.

(5) Equivalent fuse: 250V-3A fuse, SANO SOC SD4, or BUSSMAN AGC 3.

(6) Equivalent fuse: 125V-5A fuse, LITTLEFUSE 233.

(7) Use time-delay type overcurrent protection in all ungrounded conductors.

(8) Isolation is between input terminals and backplane.

(9) CPU hold-up time is for 0V unless specified. Hold-up time is dependent on power supply loading.

(10) See the Product Certification link at http://ab.com for Declarations of Conformity, Certificates, and other certification details.

General Specifications (1746-P5, 1746-P6, and 1746-P7)

Attribute	Value			
	1746-P5	1746-P6	1746-P7	
Line voltage	90...146V dc	30...60V dc	10...30V dc[1]	
Typical line power requirement	85VA	100VA	12V dc input: 50VA	24V dc input: 75VA
Inrush current, max	20 A		20 A (required for turn-on)	
Internal current capacity	5 A at 5V dc 0.96 A at 24V dc		12V dc input: 2.0 A at 5V dc 0.46 A at 24V dc	24V dc input: 3.6 A at 5V dc 0.87 A at 24V dc
			See 1746-P7 current capacity chart on page 17.	
Fuse protection[2]	Fuse is soldered in place.			
24V dc user-power current capacity	200 mA		Not applicable	
24V dc user-power voltage range	18...30V dc			
Temperature, operating ambient	0...60 °C (32...140 °F) Current capacity is derated 5% above 55 °C (131 °F).			
Isolation[3]	1800V ac RMS for 1 s		600V ac RMS for 1 s	
CPU hold-up time[4]	20 ms (full load) 3000 ms (no load)	5 ms (full load) 1500 ms (no load)	12V dc input: 1.37 ms at 0V dc (full load) 895 ms at 0V dc (no load) 10 ms at 9V dc (full load) continuous at 9V dc (no load)	24V dc input: 40 ms at 0V dc (full load) 1860 ms at 0V dc (no load) 790 ms at 11V dc (full load) continuous at 11V dc (no load)
Certification (when product is marked)	UL Listed Industrial Control Equipment for Class 1, Division 2, Groups A, B, C, D Hazardous Locations			
	C-UL Listed Industrial Control Equipment for Class 1, Division 2, Groups A, B, C, D Hazardous Locations			
	CE[5] European Union 89/336/EEC EMC Directive, compliant with: EN 50082-2 Industrial Immunity EN50081-2 Industrial Emissions European Union 73/23/EEC LVD Directive, compliant with: EN61131-2 Programmable Controllers			
	C-Tick Australian Radiocommunications Act, compliant with: AS/NZS 2064 Industrial Emissions			

(1) See page 14 for information on power supply undervoltage operation.

(2) Power supply fuse is intended to guard against fire hazard due to short-circuit conditions. This fuse may not protect the supply from miswiring or excessive transient in the power line.

(3) Isolation is between input terminals and backplane.

(4) CPU hold-up time is for 0V unless specified. Hold-up time is dependent on power supply loading.

(5) See the Product Certification link at http://ab.com for Declarations of Conformity, Certificates, and other certification details.

1746-P7 Current Capacity

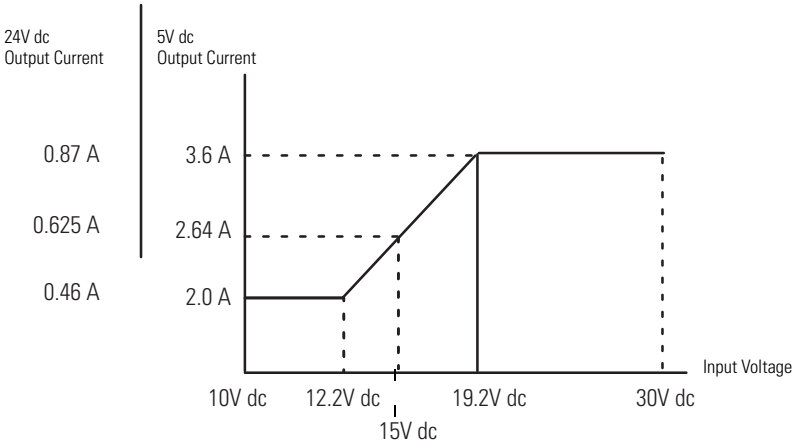

Physical Dimensions

Controller	Length, Approx. mm (in.)	Depth, Approx. mm (in.)	Height, Approx. mm (in.)
1746-P1	65 (2.56)	140 (5.70)	140 (5.51)
1746-P2	85 (3.35)		
1746-P3			
1746-P4	110 (4.33)	145 (5.70)	
1746-P5	85 (3.35)	140 (5.70)	
1746-P6			
1746-P7			

Notes:

Notes:

Rockwell Automation Support

Rockwell Automation provides technical information on the Web to assist you in using its products. At http://support.rockwellautomation.com, you can find technical manuals, a knowledge base of FAQs, technical and application notes, sample code and links to software service packs, and a MySupport feature that you can customize to make the best use of these tools.

For an additional level of technical phone support for installation, configuration, and troubleshooting, we offer TechConnect Support programs. For more information, contact your local distributor or Rockwell Automation representative, or visit http://support.rockwellautomation.com.

Installation Assistance

If you experience a problem with a hardware module within the first 24 hours of installation, please review the information that's contained in this manual. You can also contact a special Customer Support number for initial help in getting your module up and running.

United States	1.440.646.3434 Monday – Friday, 8am – 5pm EST
Outside United States	Please contact your local Rockwell Automation representative for any technical support issues.

New Product Satisfaction Return

Rockwell tests all of its products to ensure that they are fully operational when shipped from the manufacturing facility. However, if your product is not functioning, it may need to be returned.

United States	Contact your distributor. You must provide a Customer Support case number (see phone number above to obtain one) to your distributor in order to complete the return process.
Outside United States	Please contact your local Rockwell Automation representative for return procedure.

Allen-Bradley, Rockwell Automation, TechConnect, SLC, and SLC 500 are trademarks of Rockwell Automation, Inc.

Trademarks not belonging to Rockwell Automation are the property of their respective companies.

www.rockwellautomation.com

Power, Control and Information Solutions Headquarters

Americas: Rockwell Automation, 1201 South Second Street, Milwaukee, WI 53204-2496 USA, Tel: (1) 414.382.2000, Fax: (1) 414.382.4444
Europe/Middle East/Africa: Rockwell Automation, Vorstlaan/Boulevard du Souverain 36, 1170 Brussels, Belgium, Tel: (32) 2 663 0600, Fax: (32) 2 663 0640
Asia Pacific: Rockwell Automation, Level 14, Core F, Cyberport 3, 100 Cyberport Road, Hong Kong, Tel: (852) 2887 4788, Fax: (852) 2508 1846

Publication 1746-IN004B-EN-P - March 2008 PN 40072-083-01(6)

Supersedes Publication 1746-IN004A-EN-P - September 2007

Copyright © 2008 Rockwell Automation, Inc. All rights reserved. Printed in Malaysia.