SIEMENS

SIMODRIVE 660
AC Main Spindle Drive Converters

Description

10.92 Edition

www.gbautomatyka.pl

SIMODRIVE 660
Transistor PWM Converters
for
AC Main Spindle Drives

Description

www.rgbautomatyka.pl

10.92 Edition

SIMODRIVE® documentation

Printing history

Brief details of this edition are listed below.

The status of each edition is shown by the code in the 'Remarks' column.

Status code in the "Remarks" column:

A . . . New documentation.
B . . . Unrevised reprint with new Order No.
C . . . Revised edition with new status. If factual changes have been made since the last edition, this is indicated by a new edition coding in the header on that page.

Edition	Order No.	Remarks
10.92	6ZB5 420-0AQ02-0BA0	A

Other functions not described in this documentation might be executable in the control. This does not, however, represent an obligation to supply such functions with a new control or when servicing

This publication was produced on the Siemens 5800 Office system. Subject to change without prior notice.

The reproduction, transmission or use of this document or its contents is not permitted without express written authority. Offenders will be liable for damages. All rights, including rights created by patent grant or registration of a utility model or design are reserved.

© Siemens AG 1992 All Rights Reserved

Preliminary information

This document is part of the SIMODRIVE® documentation. All documents can be obtained individually. Please contact your local Siemens office for a complete listing of all of the documentation including the advertizing brochures, catalogs, overviews, product briefs, instruction manuals and reference manuals with Order No., where they can be ordered and price.

WARNING

The data and instructions in all of the instruction manuals and any other instructions must always be observed to prevent potentially dangerous situations and damage.

- Additional safety information (yellow) is provided with the Instruction Manual, which includes supplementary information regarding safety measures for electrical machines and equipment. This safety information should also be used in conjunction with all other Manuals which are provided (e.g. for brakes, etc.).
- For special machines and equipment, the specifications in the catalogs and quotations are valid.
- Further, the relevant national, local and plant-specific regulations and specifications must be observed.

Please note that the color coding of the connecting cables can change, therefore please check the signal cables before you attach the connectors.

Warning information

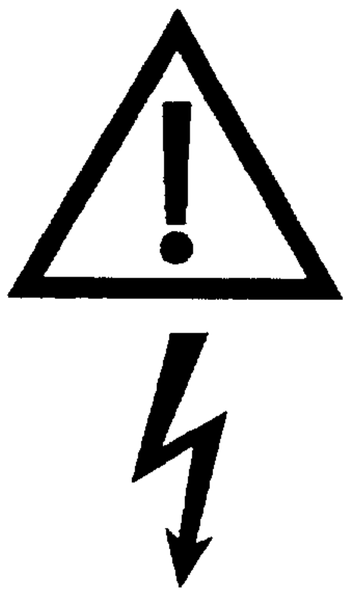

WARNING

Hazardous voltages are present in this electrical equipment during operation.

Non observance of the safety instructions can result in severe personal injury or property damage.

Only qualified personnel should work on or around the equipment after first becoming thoroughly familiar with all warning and safety notices and maintenance procedures contained herein.

The successful and safe operation of this equipment is dependent on proper handling, installation, operation and maintenance.

Definitions

- **Qualified personnel**

  For the purpose of this Description and product labels, a 'Qualified person' is someone who is familiar with the installation, construction and opertion of the equipment and the hazards involved. He or she must have the following qualifications:

  1. **Trained and authorized to energize, de-energize, clear, ground and tag circuits and equipment in accordance with established safety procedures.**
  2. **Trained in the proper care and use of protective equipment in accordance with established safety procedures.**
  3. **Trained in rendering first aid**

- **DANGER**

For the purpose of this Description and product labels, 'Danger' indicates death, severe personal injury or substantial property damage will result if the proper precautions are not taken.

- **WARNING**

For the purpose of this Description and product labels, 'Warning' indicates death, severe personal injury or substantial property damage can result if proper precautions are not taken

- **CAUTION**

For the purpose of this Description and product labels, 'Caution' indicates minor personal injury or property damage can result if proper precautions are not taken.

- **NOTE**

For the purpose of this Description, 'Note' indicates information about the product or the respective part of the Description which is essential to highlight.

AC Main Spindle Drives 1

Transistor PWM Converters 2

Matching Transformers 3

Installation Instructions 4

Appendix 5

Contents

		Page
1	**AC main spindle drives**	1–1
1.1	Application	1–1
1.2	Mode of operation	1–5
1.3	Complete standard drives	1–6
2	**Transistor PWM converters**	2–1
2.1	Application	2–1
2.2	Design	2–1
2.3	Mode of operation	2–4
2.3.1	Power section	2–4
2.3.2	Closed-loop control	2–4
2.3.3	Software board	2–5
2.3.4	Special applications	2–5
2.3.4.1	"C-axis mode"	2–5
2.3.4.2	Motor encoder output	2–5
2.3.4.3	Master/slave drive	2–7
2.4	Options	2–10
2.4.1	"PG/PC coupling" option	2–10
2.4.2	"External heat dissipation" option	2–10
2.4.3	"Flange for connecting external heat dissipation" option	2–10
2.5	Start-up	2–11
2.6	Interfaces	2–12
2.6.1	Signal inputs	2–12
2.6.1.1	Analog signals	2–12
2.6.1.2	Binary signals	2–12
2.6.2.	Signal outputs	2–15
2.6.2.1	Analog signals	2–15
2.6.2.2	Binary signals	2–16
2.6.2.3	Encoder signals	2–17
2.6.2.4	Display messages	2–17
2.7	Engineering information for dimensioning the DC link for a combination drive consisting of SIMODRIVE 660 and SIMODRIVE 611	2–18
2.8	Technical data	2–19
2.9	Product designation	2–22
2.9.1	Converter	2–22
2.9.2	Software board	2–23
2.9.3	Start-up software for PG/PC	2–23
3	**Matching transformers**	3–1
3.1	Application	3–1
3.2	Technical data of the autotransformers	3–1

4	**Installation instructions**	4–1
4.1	PWM converters	4–1
4.1.1	Mounting the PWM converter	4–1
4.1.2	Connecting-up the PWM converter	4–1
4.1.3	Board handling	4–4
4.1.4	PWM converter terminals	4–5
4.1.5	Recommended connection	4–9
4.2	Cable connections	4–11
5	**Appendix**	5–1
5.1	Dimension drawings, PWM convertersr	5–1
5.2	Dimension drawing, autotransformer	5–9

www.rgbautomatyka.pl

1 AC main spindle drives

1.1 Application

The SIMODRIVE® AC main spindle drives for machine tools described here, consist of a matched combination of 1PH AC squirel-cage induction motors with sine/cosine encoder system and SIMODRIVE 660 transistor PWM converters.

SIMODRIVE main spindle drives combine the advantages of induction motors - rugged and low-maintenance - with state-of-the-art microprocessor technology. Using the TRANSVEKTOR® closed-loop control developed by Siemens, it has become possible to control induction motors with a control performance comparable to that of DC drives. Digital technology allows extremely short start-up times by presetting the main spindle drive, as well as a comprehensive measuring and diagnostics system. With these characteristics, SIMODRIVE AC main spindle drives fulfill all the requirements demanded of a drive concept for machine tools in modern production facilities:

- Fast start-up
- High degree of operator friendliness and simple diagnostics
- High operational reliability
- Very low maintenance
- Simple reproducibility of settings, e.g. during servicing
- Wide speed range at constant power
- Reduction of the number of mechanical gear stages

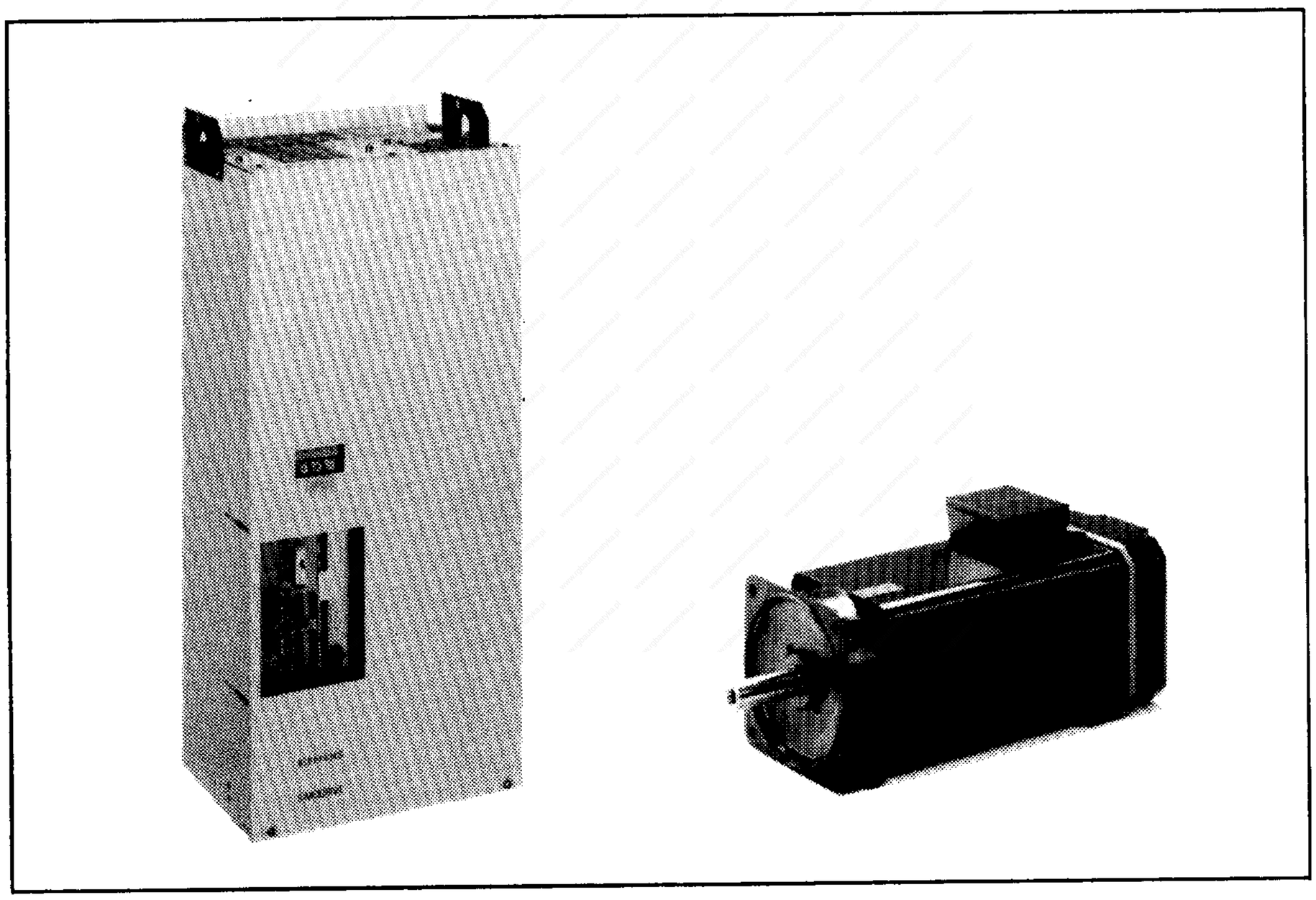

1PH AC motors and SIMODRIVE 660 transistor PWM converter

Detailed information on the motors is included in the description of the AC main spindle motors.

© Siemens AG 1992 All Rights Reserved

Important characteristics of transistor PWM converters

- They can be directly connected to the supply without transformer, commutating reactors and inrush current limiting
- Regenerative feedback into the line supply during braking
- Digital microprocessor concept
- High long-time accuracy of the control parameters
- Load and control charactersitics similar to a DC motor as a result of field-oriented closed-loop control
- C axis as standard
- Simple and fast digital parameter input
- Operating and fault message displays
- High degree of safety and reliability using monitoring circuits
- Microprocessor-based diagnostics
- Options:
  - Spindle positioning
  - Fast start-up with a programming unit (PG)/PC-AT

© Siemens AG 1992 All Rights Reserved

SIMODRIVE 660 PWM converter and 1PH motors with rated outputs up to 76 kW at rated speeds from 500 to 2000 RPM

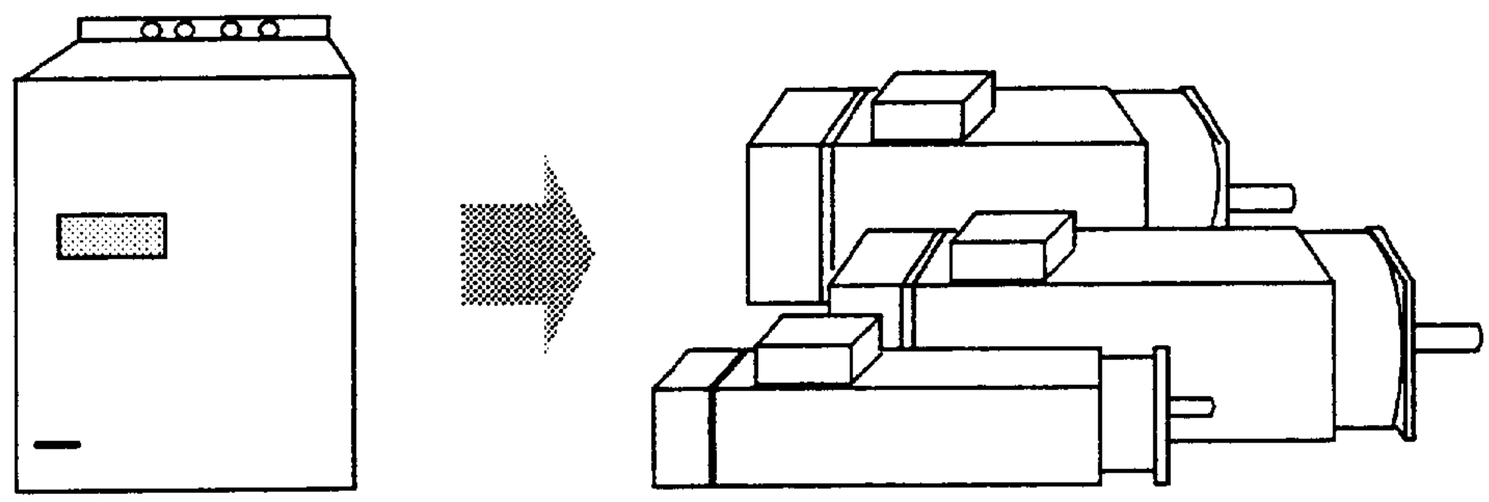

SIMODRIVE 660 PWM converter and 1PH motors using programming units and PCs for start-up and diagnostics:

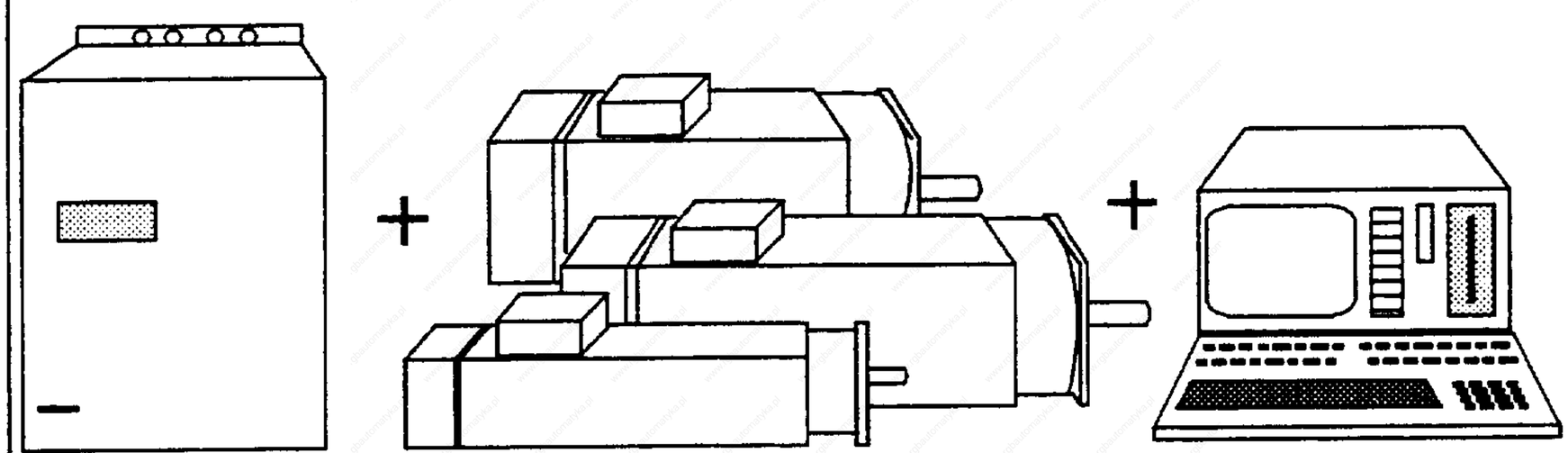

SIMODRIVE 660 PWM converter, spindle positioning option (without NC):

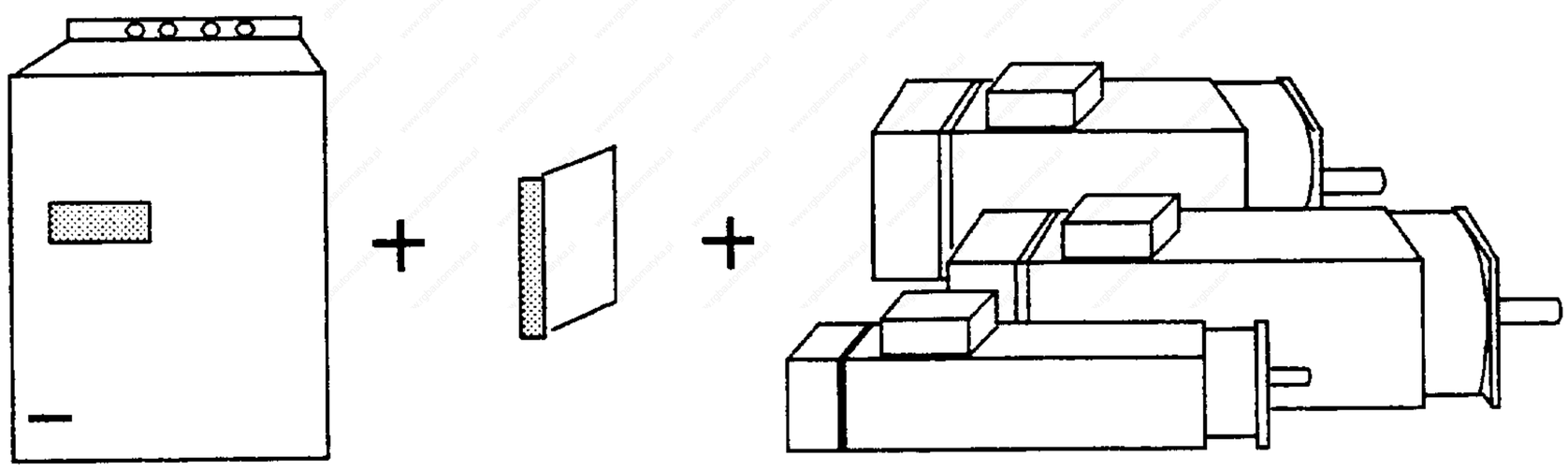

Applications of the SIMODRIVE 660 transistor PWM converter

© Siemens AG 1992 All Rights Reserved

Main spindle drive with SIMODRIVE 660 and 1PH motors as twin drive for coupled axes:

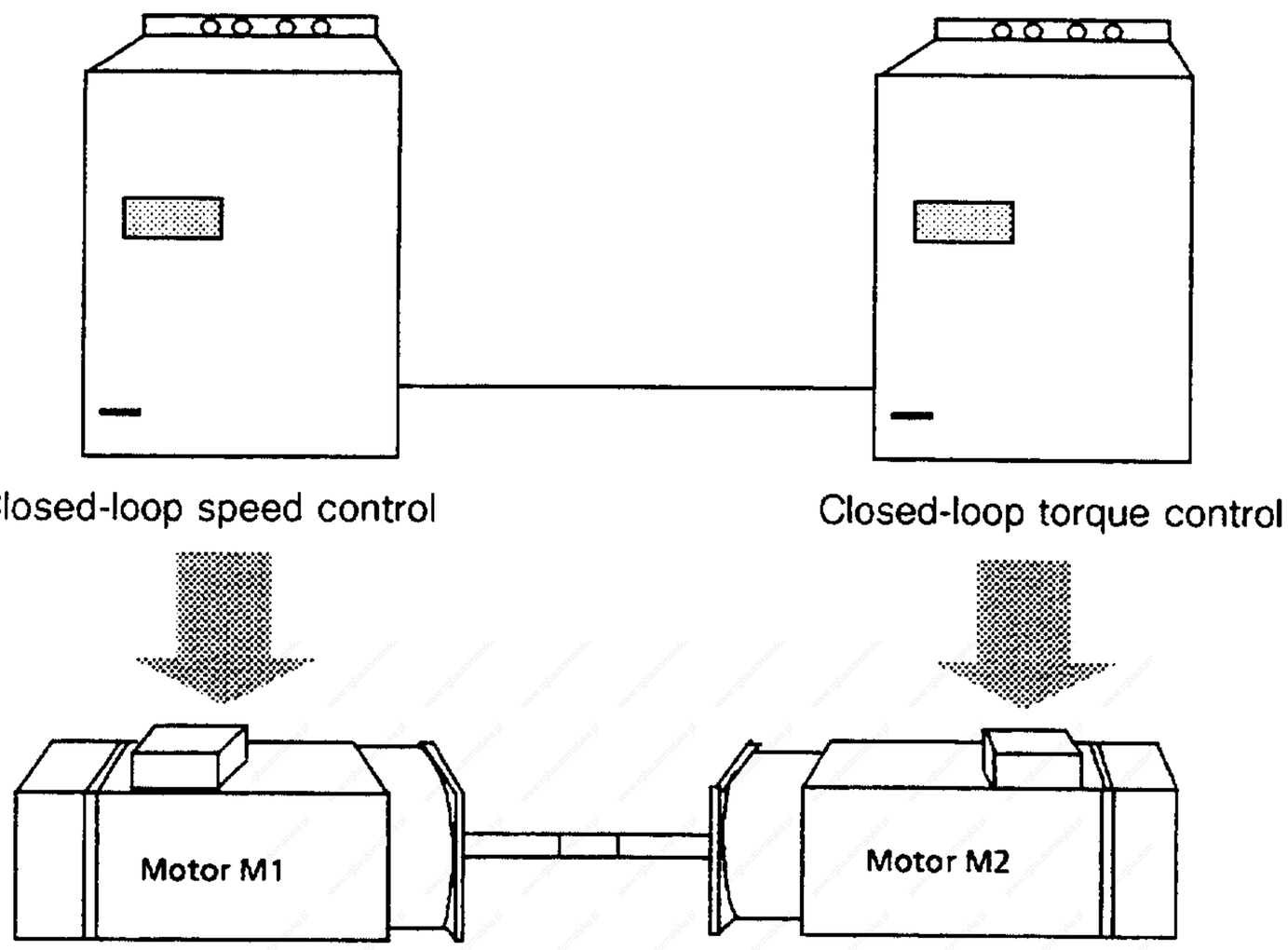

SIMODRIVE 660 main spindle drive with 1PH motors and SIMODRIVE 611 feed drive with 1FT5 motors

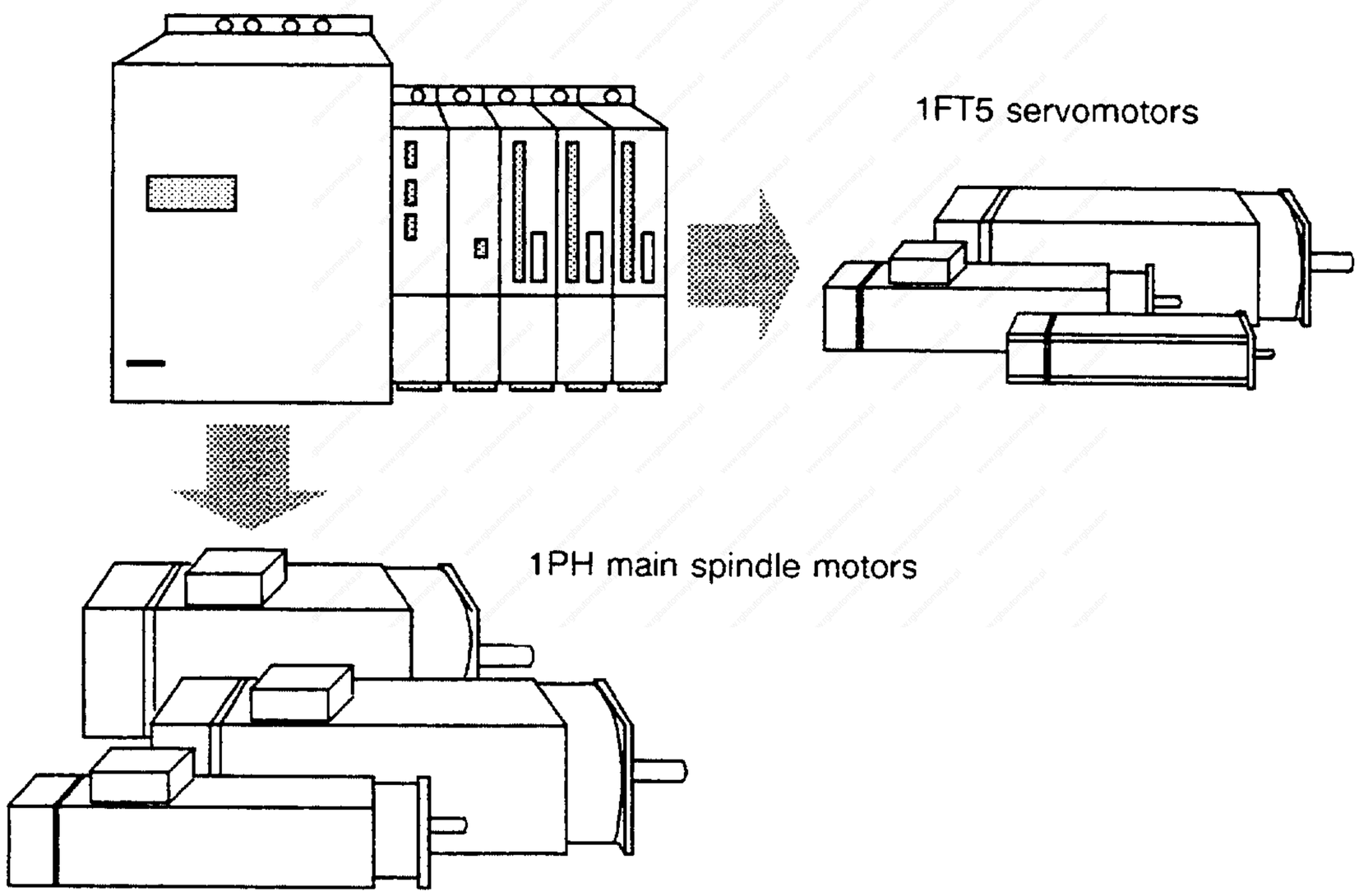

Applications of the SIMODRIVE 660 transistor PWM converter

© Siemens AG 1992 All Rights Reserved

1.2 Mode of operation

With SIMODRIVE AC main spindle drives, the TRANSVEKTOR® closed-loop control concept has been introduced in the machine tool sector, which is based on the principle of field-oriented closed-loop control. In conjunction with FCS (Frequency Compensated Spindle drive) closed-loop control, a high-performance current control technique, it is possible to operate induction motors with a dynamic performance and precision which has been almost unknown up until the present time. The advantages of digital technology (accuracy) and analog technology (speed) are ideally combined. The open- and closed-loop control of the AC main spindle drive consists of a closed-loop speed controller with ramp-function generator and stored field weakening characteristic, a secondary closed-loop current control circuit, inverter control system and sequential logic.

While AC drives used up until now always represented a non-linear controlled system, here, for the first time, a linear relationship exists, where the induction motor behaves similar to a DC motor and where the armature current (with constant excitation) is proportional to the torque.

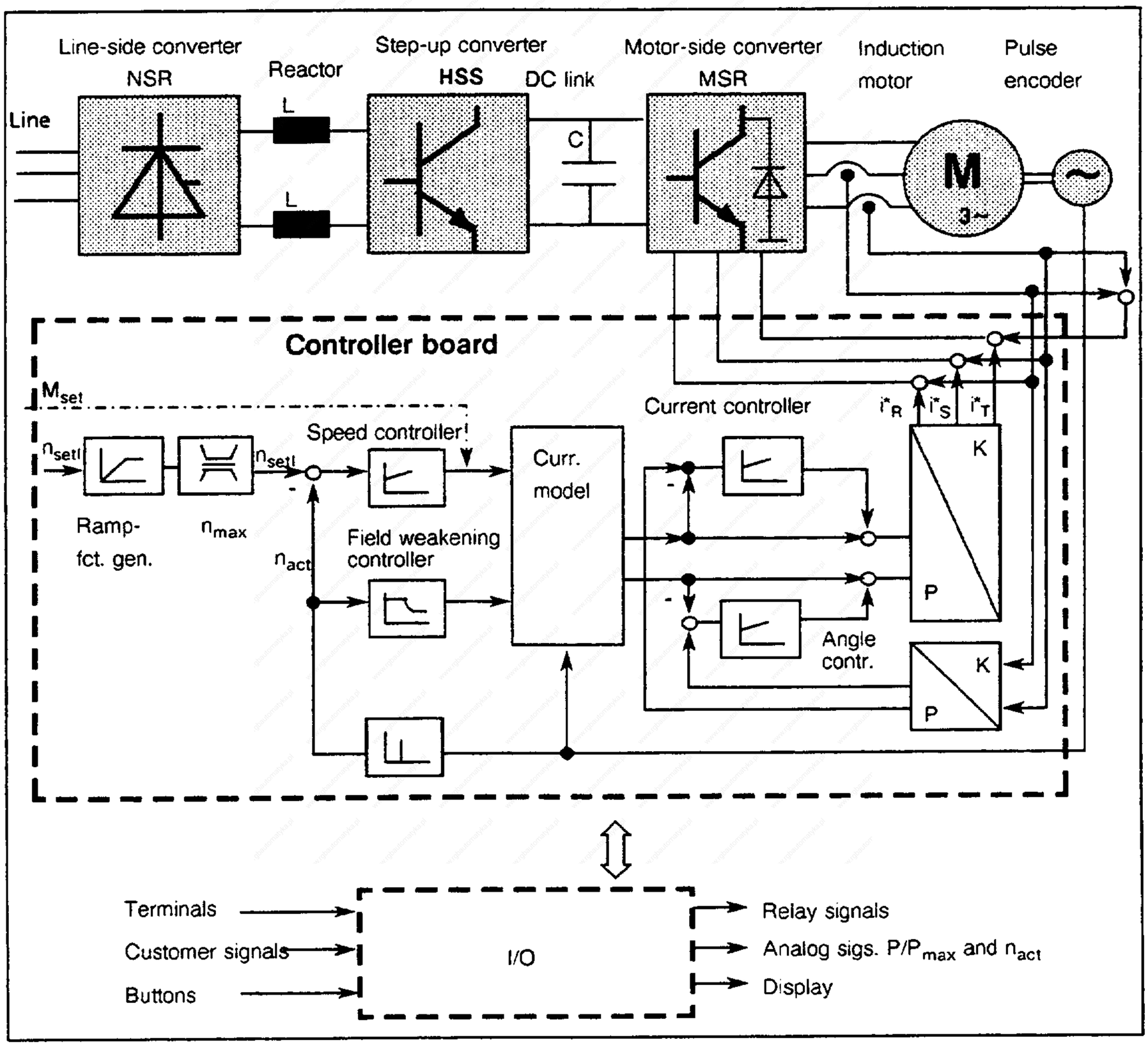

Block diagram of the SIMODRIVE AC main spindle drive

It is possible to rapidly change the stator voltage and frequency of the AC motor using the transistor PWM converter.

© Siemens AG 1992 All Rights Reserved

The decoupling of these two motor variables is simulated in a microprocessor computer module. The reference variables for the motor supply, frequency, phase position and amplitude are generated using this computer model to provide each required torque and magnetic field, taking into account the torque and field limits. The resulting stator current vector comprises rotor flux and torque-generating current components to the rotor flux. Field-oriented operation exists if the current components generating the flux remain constant and the current components generating torque are established vertically to the rotor flux corresponding to the required torque.

The ability to generate the current vector oriented to the flux vector phase position (field orientation) allows torque and flux to be separately controlled, and permits a control quality to be achieved which is better than DC technology.

The sequential logic in addition to the field-oriented control, is also realized in the microprocessor.

Digital technology provides a high degree of user-friendliness and a high level of reproducibility of the setting variables. The parameters required for the closed-loop control are stored in a non-volatile EEPROM, and can also transferred into other PWM converters.

1.3 Complete standard drives

The standard drives available are listed in the table. An appropriate PWM converter is assigned to each AC motor depending on the required overload capability. The available overload capability refers to S6 duty with a load cycle duration of 10 minutes. Please refer to the specific speed-power diagrams of the motors for the permissible speed control range as well as the permissible switch-on duration with overload (AC main spindle motor description).

Contrary to DC technology, there is no linear relationship between current and torque of AC motors as a result of the magnetizing current. Thus, the currents necessary for the demanded overload capability of a specific AC motor are already taken into account for the required PWM converter in the subsequent tables.

PWM converter thermal time constants are significantly lower than those for AC motors. The converters are thermally dimensioned for continuous operation. Further, the 6SC6612 and 6SC6620 converters have an overload capability. These characteristics are taken into account in the following table. The switch-on duration for S6 duty should be taken from the motor data sheets.

SIMODRIVE 611 main spindle modules can be used to feed motors having lower outputs. The applicable assignment table is included in the Description, SIMODRIVE 611 main spindle modules.

© Siemens AG 1992 All Rights Reserved

1PH4 AC motor	Rated motor output [kW]	Rated speed [RPM]	Max. speed [RPM]	PWM converter for n x overload capability 1)			
				1.0	1.2	1.4	1.6
1PH4133-4NF2	15	1500	8000	6SC6608[3]	6SC6608[3]	6SC6608[3]	6SC6608
1PH4135-4NF2	22	1500	(12000)[2]	6SC6608	6SC6608	6SC6612	6SC6612
1PH4137-4NF2	27	1500		6SC6608	6SC6612	6SC6612	6SC6612
1PH4138-4NF2	30	1500		6SC6612	6SC6612	6SC6612	6SC6620
1PH4163-4NF2	37	1500	6500	6SC6612	6SC6612	6SC6612	6SC6620
1PH4167-4NF2	46	1500	(8000)[2]	6SC6612	6SC6612	6SC6620	6SC6620
1PH4168-4NF2	52	1500		6SC6620	6SC6620	6SC6620	6SC6620

Available standard drives

1PH6 AC motors	Rated motor output [kW]	Rated speed [RPM]	Max. speed [RPM]	PWM converter with n x overload capability 1)			
				1.0	1.2	1.4	1.6
1PH6137-4NG4	24	2000	8000	6SC6608[3]	6SC6608[3]	6SC6608[3]	6SC6608
1PH6138-4NF4	22	1500	(12000)[2]	6SC6608	6SC6608	6SC6608	6SC6612
1PH6138-4NG4	28	2000		6SC6608	6SC6608	6SC6612	6SC6612
1PH6161-4NF0	22	1500	6500	6SC6608[3]	6SC6608[3]	6SC6608[3]	6SC6608
1PH6161-4NF4	22	1500	(8000)[2]	6SC6608	6SC6608	6SC6608	6SC6612
1PH6161-4NG4	28	2000		6SC6608	6SC6608	6SC6612	6SC6612
1PH6163-4NB4	11.5	500		6SC6608	6SC6608	6SC6612	6SC6612
1PH6163-4NF0	30	1500		6SC6608	6SC6612	6SC6612	6SC6612
1PH6163-4NF4	30	1500		6SC6612	6SC6612	6SC6612	6SC6612
1PH6163-4NG4	38	2000		6SC6612	6SC6612	6SC6612	6SC6612
1PH6167-4NB4	14.5	500		6SC6608	6SC6612	6SC6612	6SC6612
1PH6167-4NF0	37	1500		6SC6608	6SC6612	6SC6612	6SC6612
1PH6167-4NF4	37	1500		6SC6612	6SC6612	6SC6612	6SC6612
1PH6167-4NG0	45	2000		6SC6612	6SC6612	6SC6612	6SC6612
1PH6167-4NG4	45	2000		6SC6612	6SC6612	6SC6612	6SC6612
1PH6186-4NB4	22	500	5000	6SC6608	6SC6608	6SC6608	6SC6612
1PH6186-4NE4	42	1250	(7000)[2]	6SC6608	6SC6612	6SC6612	6SC6612
1PH6186-4NF4	50	1500		6SC6612	6SC6612	6SC6612	6SC6612
1PH6206-4NB8	32	500	5000	6SC6608	6SC6608	6SC6612	6SC6612
1PH6206-4NB4	32	500	(7000)[2]	6SC6612	6SC6612	6SC6612	6SC6612
1PH6206-4NE4	63	1250		6SC6612	6SC6612	6SC6620	6SC6620
1PH6206-4NF4	76	1500		6SC6620	6SC6620	6SC6620	6SC6620

Available standard drives

1) The current rating of the main spindle converter is specified in the table
2) Speeds are optional
3) Operation also possible with 60/80 A SIMODRIVE 611 main spindle module

© Siemens AG 1992 All Rights Reserved

2 Transistor PWM converters

2.1 Application

SIMODRIVE 660 transistor PWM converters have been developed to supply 1PH AC main spindle motors equipped with sine/cosine encoder systems, with a controlled 600 V DC link voltage and fully regenerative braking. They control the drive power and speed of the drive in 4-quadrant operation. Three converters with rated apparent outputs from between 60 and 150 kVA are available.
The transistor PWM converters are mounted in an enclosure together with the incoming fuses and can be directly connected to a three-phase 400 V AC 50/60 Hz supply. Transformers, commutating reactors and inrush limiters are not required. Monitoring electronics provides short-circuit-, overload-, and ground fault protection for the converters. The TRANSVEKTOR® closed-loop control concept guarantees high control performance such as is required for C-axis operation.

All 1PH motor data required for calculating the field is stored in a converter memory. During start-up, the microprocessor automatically provides the complete motor data. Customer-specific closed-loop control parameters can be entered or changed on a display and operator control unit. During operation, operational statuses and faults are indicated on the 6-digit display of the display and operator control unit.

All parameters and fault messages can be displayed in plain text on the PG/PC with the interface for connecting programming units or PCs. A data set can be stored on floppy disk and can be used for other standard machines.

2.2 Design

The power section consists of

- A line-side converter with regenerative feedback into the supply:
- A DC voltage link and
- A transistor PWM converter which generates a variable-voltage and variable-frequency three-phase system

The electronics is supplied from the DC link, thus providing ride-through capability during brief supply voltage failures.

The necessary line-side fuses are incorporated in the PWM converter. Fuses are not blown when the supply voltage fails when the unit is in the regenerative mode.

© Siemens AG 1992 All Rights Reserved

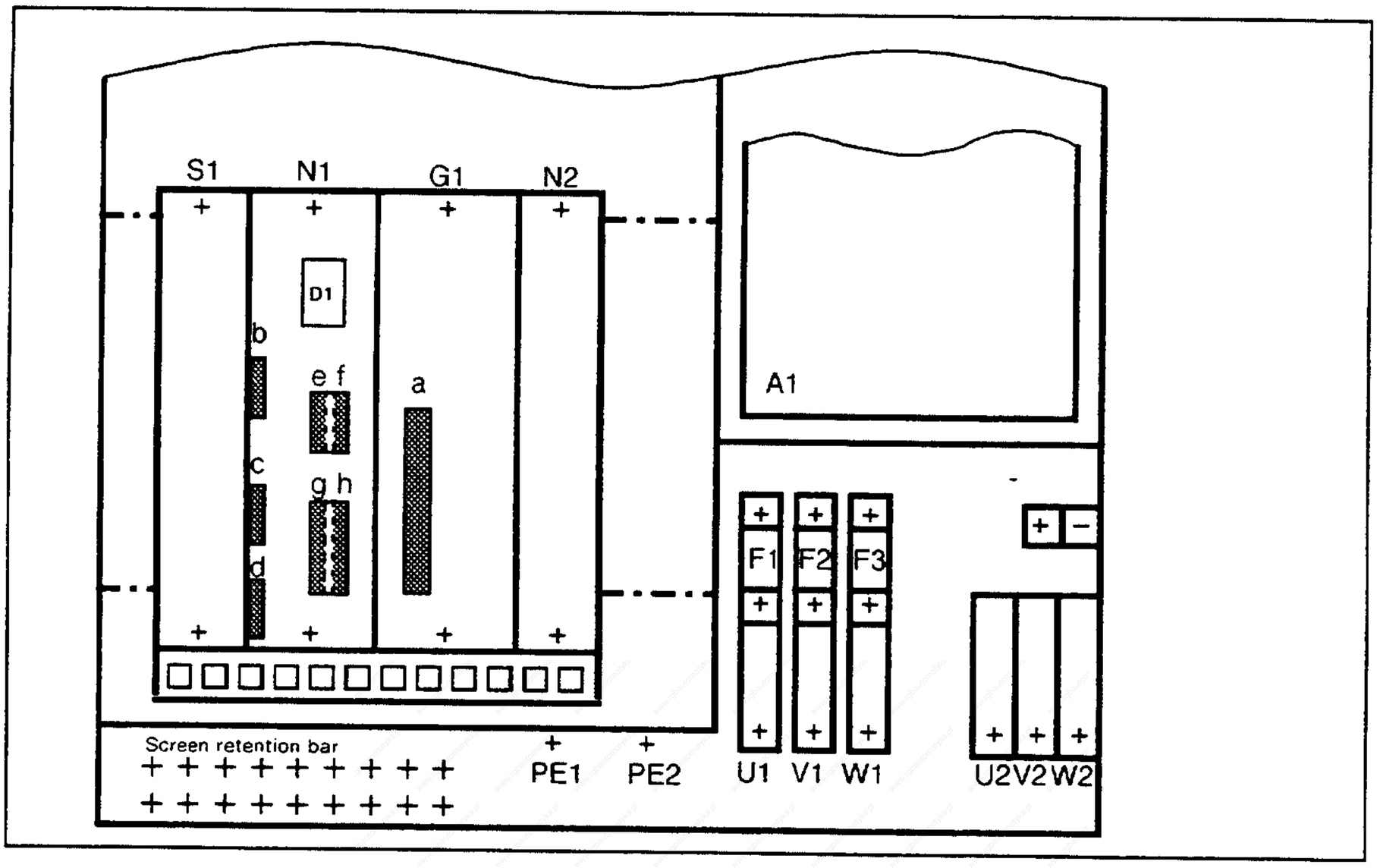

Design of the 6SC6608 transistor PWM inverter

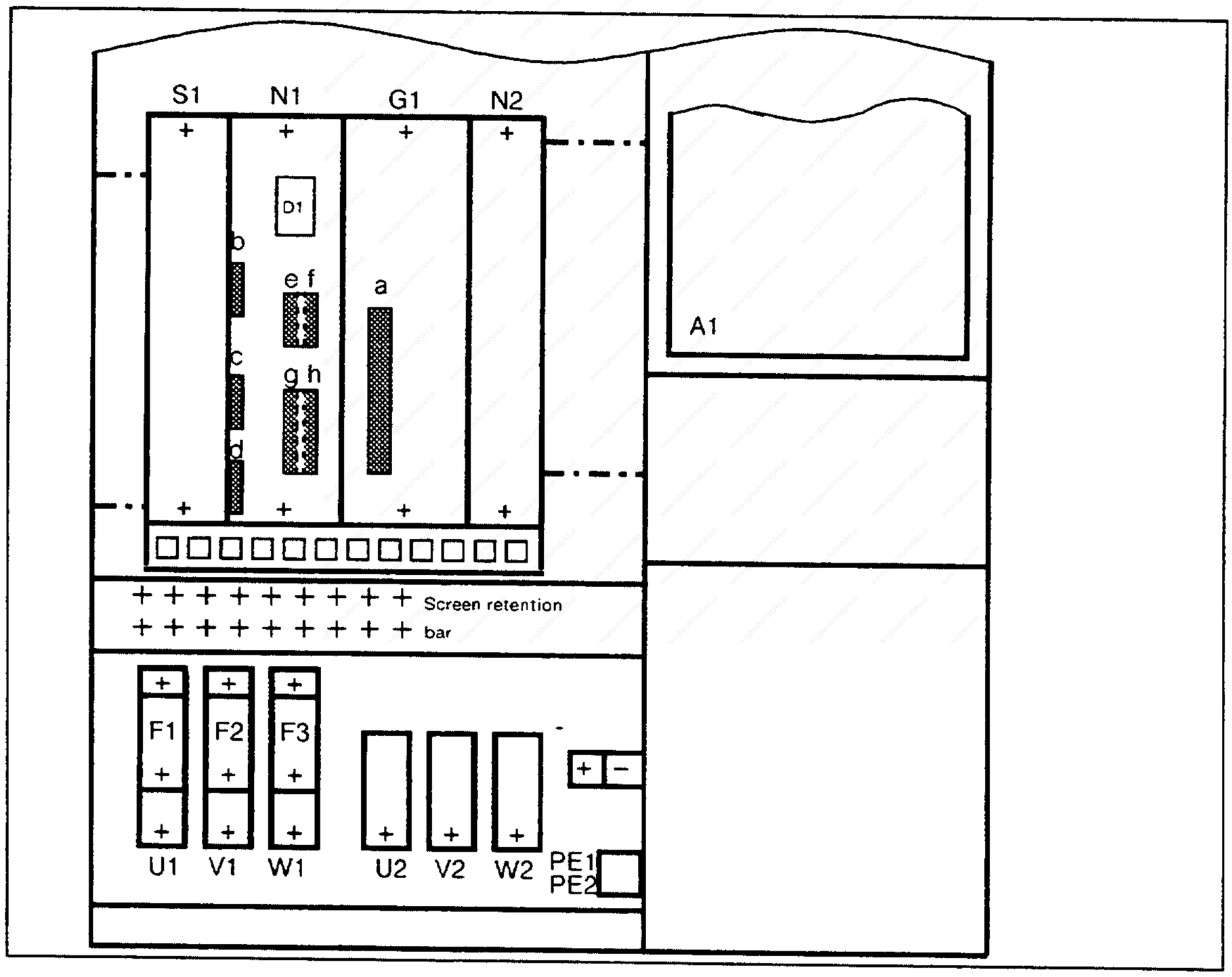

Design of the 6SC6612 transistor PWM inverter

© Siemens AG 1992 All Rights Reserved

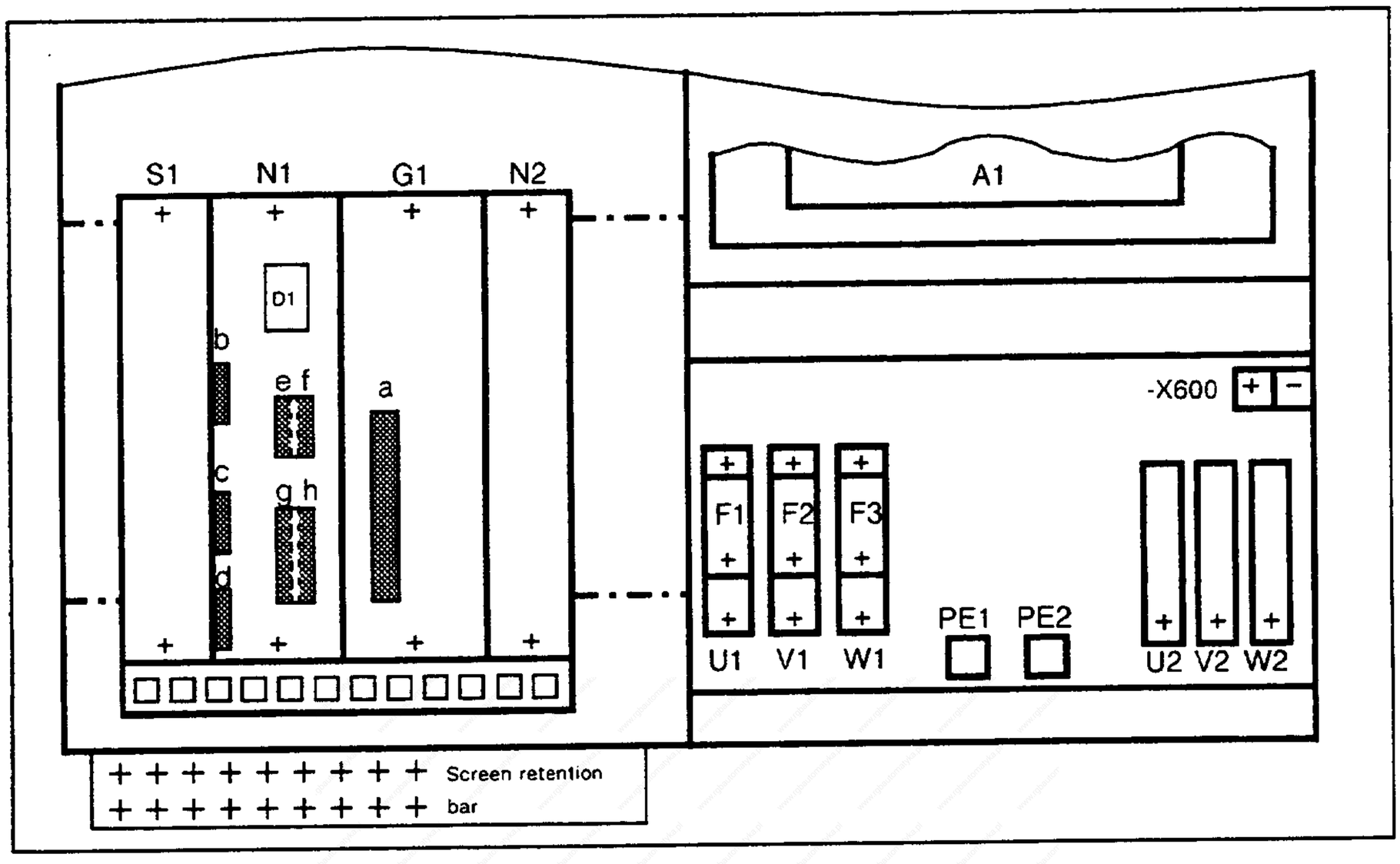

Design of the 6SC6620 transistor PWM inverter

N2 = Infeed/regenerative feedback board

S1 = Option

G1 = Central controller board
a = X114 = Relay outputs

D1 = Software board (supplied separately)

A1 = Gating board/power section

N1 = Control board
b = X112 = Serial interface
c = X113 = Motor encoder output
d = X114 = Motor encoder input
e = X121:A = Speed setpoints
f = X121:B = D/A converter outputs
g = X122:A = Terminals (permanently assigned)
h = X122:B = Terminals (freely programmable)

© Siemens AG 1992 All Rights Reserved

2.3 Mode of operation

2.3.1 Power section

The DC link is supplied from a 6-pulse thyristor bridge circuit which operates in both the rectifier and inverter modes. In the rectifier mode, the thyristors behave like diodes. The gating control uses gating transformers. The infeed/regenerative feedback board is responsible for pulse generation.

In order to permit regenerative operation with six thyristors, the DC link is reversed through the step-up controller, and the thyrsitors are controlled, so that they operate in the inverter mode.

The motor-side converter consists of six transistors with integrated, anti-parallel free-wheeling diodes. A pulse-width modulated voltage of 0 to 430 V is generated by controlling the transistors.

2.3.2 Closed-loop control

The speed setpoint is externally entered from the closed-loop control as analog bipolar signal (0 to ± 10 V) or internally as digital value. A microprocessor calculates, using a high-resolution speed actual value according to the principle of closed-loop field oriented control (TRANSVEKTOR® closed-loop control) the torque- and flux-generating current components and generates the setpoint for the stator current (magnitude and phase). A fast, highly-accurate closed-loop current control ensures that this current setpoint is converted into a phase current actual value with the correct magnitude and phase. Thus, the AC main spindle motor can be controlled just as precisely as a DC motor.
The control structure consists of a speed control loop with ramp-function generator and a secondary torque control loop. It is possible to directly enter the torque setpoint, bypassing the speed control loop.

The "oriented spindle stop" **with** higher-level position control loop in a numerical control (NC function M19) can be achieved as standard with an accuracy of ± 0.1° as a result of the sophisticated control concept. The standard sine/cosine encoders in the AC motor are used. The position is maintained controlled, i.e. load torques can be applied but the required position is still maintained.

Operating and fault messages are displayed on a six-digit display.

© Siemens AG 1992 All Rights Reserved

2.3.3 Software board

The complete software for operating the converter is stored on a plug-in software board. All user-specific settings are stored on this software board. The complete range of converter settings can be quickly and easily transferred with the software board when a board or converter is replaced.

2.3.4 Special applications

2.3.4.1 "C axis" mode

In the "C-axis" mode, the main spindle drive attains feed drive quality. This function is, for example, necessary for one-chuck machining.

The speed range in the "C-axis" mode is 0.01 RPM up to maximum rated speed. In order to fulfill this high requirement, the speed actual value from the standard encoder system is internally multiplied, so that a resolution exceeding 4000000[1)] steps per revolution is achieved. A special encoder for speed actual value sensing is not required.

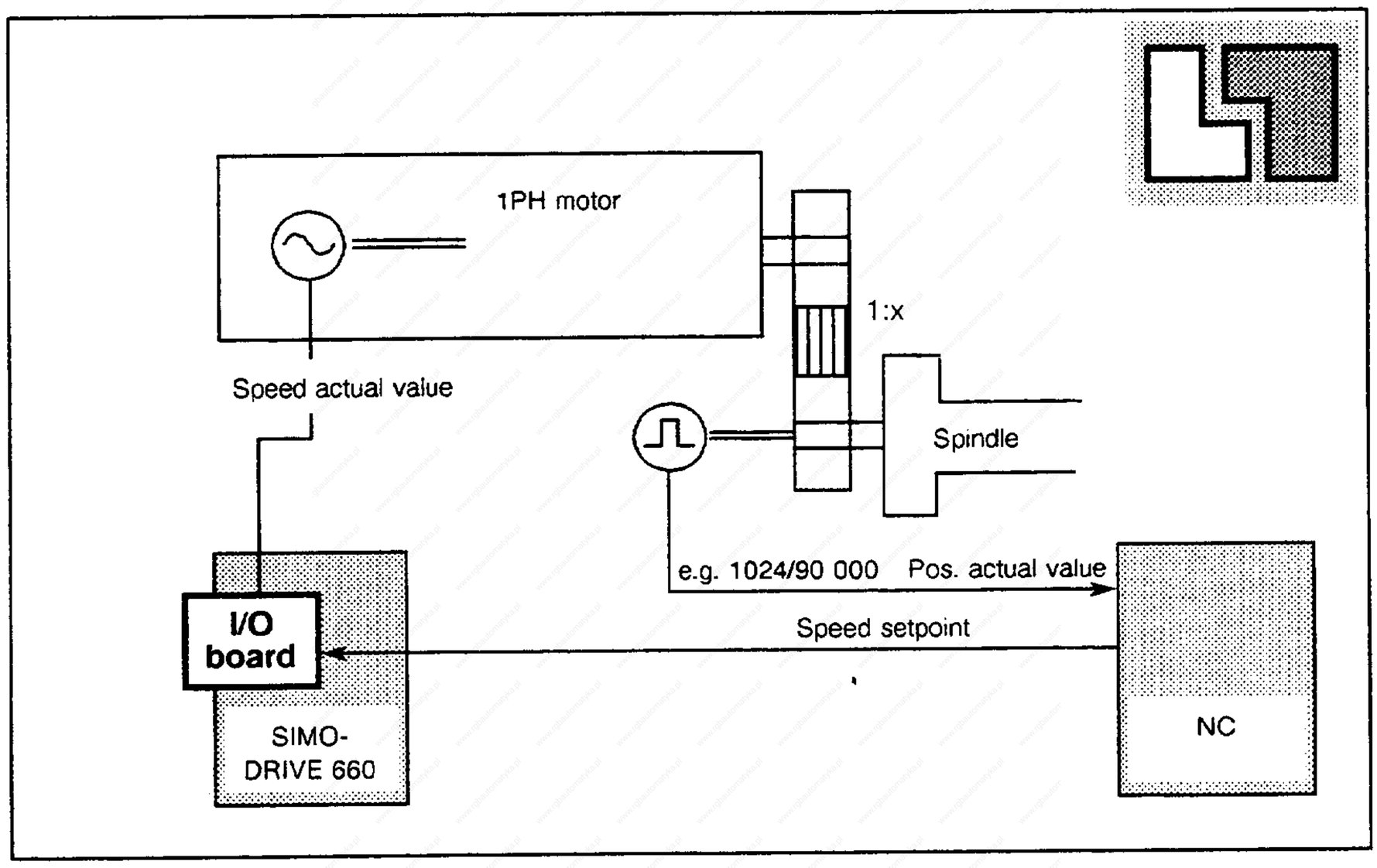

2.3.4.2 Motor encoder output

The motor encoder sine/cosine signals are provided at connector X113 of the control board for external processing as square-wave signal trains.

A multiplication factor 0.5/1/2/4 can be selected via parameter.

A special measuring cable is available for interfacing to SINUMERIK System 800 controls (Order No. 6FC 9348-2R□).

1) 1PH4/6 motors with an encoder resolution of 2048 pulses/revolution

© Siemens AG 1992 All Rights Reserved

When engineering the drive please note the following maximum speeds (RPM) for the "motor encoder output" function dependent on the encoder pulse number and the multiplication factor.

Motor	Encoder pulse number	Pulse multiplication			
		0.5	1	2	4
1PH2	256	>32000	>32000	>32000	20000
1PH2	512	>32000	>32000	32000	10000
1PH6 1PH4 version1	2048[1]	16000	16000	6000	2000

Note: The specified maximum speed is only valid for the motor encoder output function.

Caution: Observe the maximum permissible motor speed

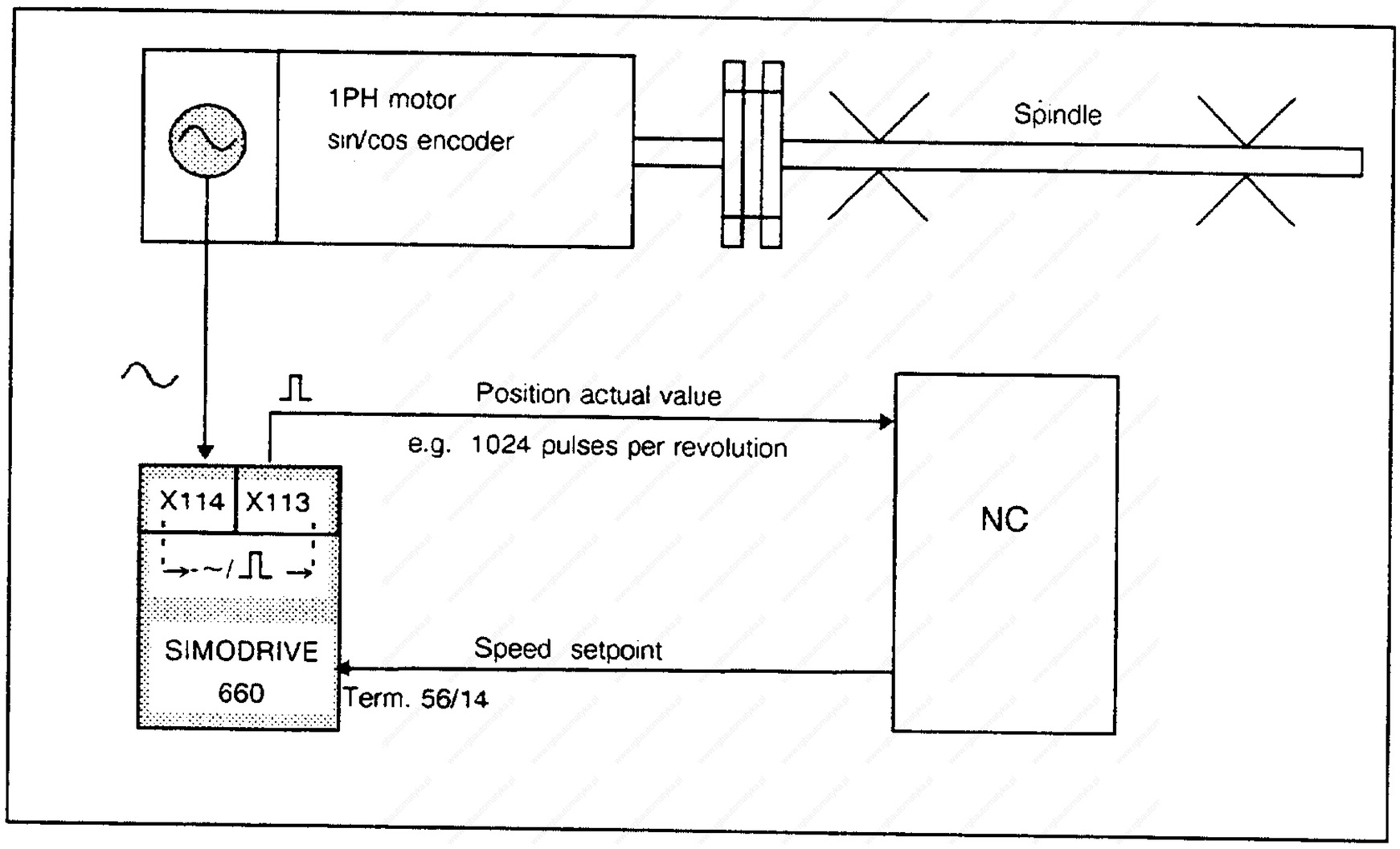

Motor encoder output

1) Standard encoder system for 1PH4/6 motors

© Siemens AG 1992 All Rights Reserved

2.3.4.3 Master/slave drive

Two SIMODRIVE main spindle drives can be operated when they are rigidly mechanically coupled if the master drive is speed controlled and the slave drive is torque controlled.

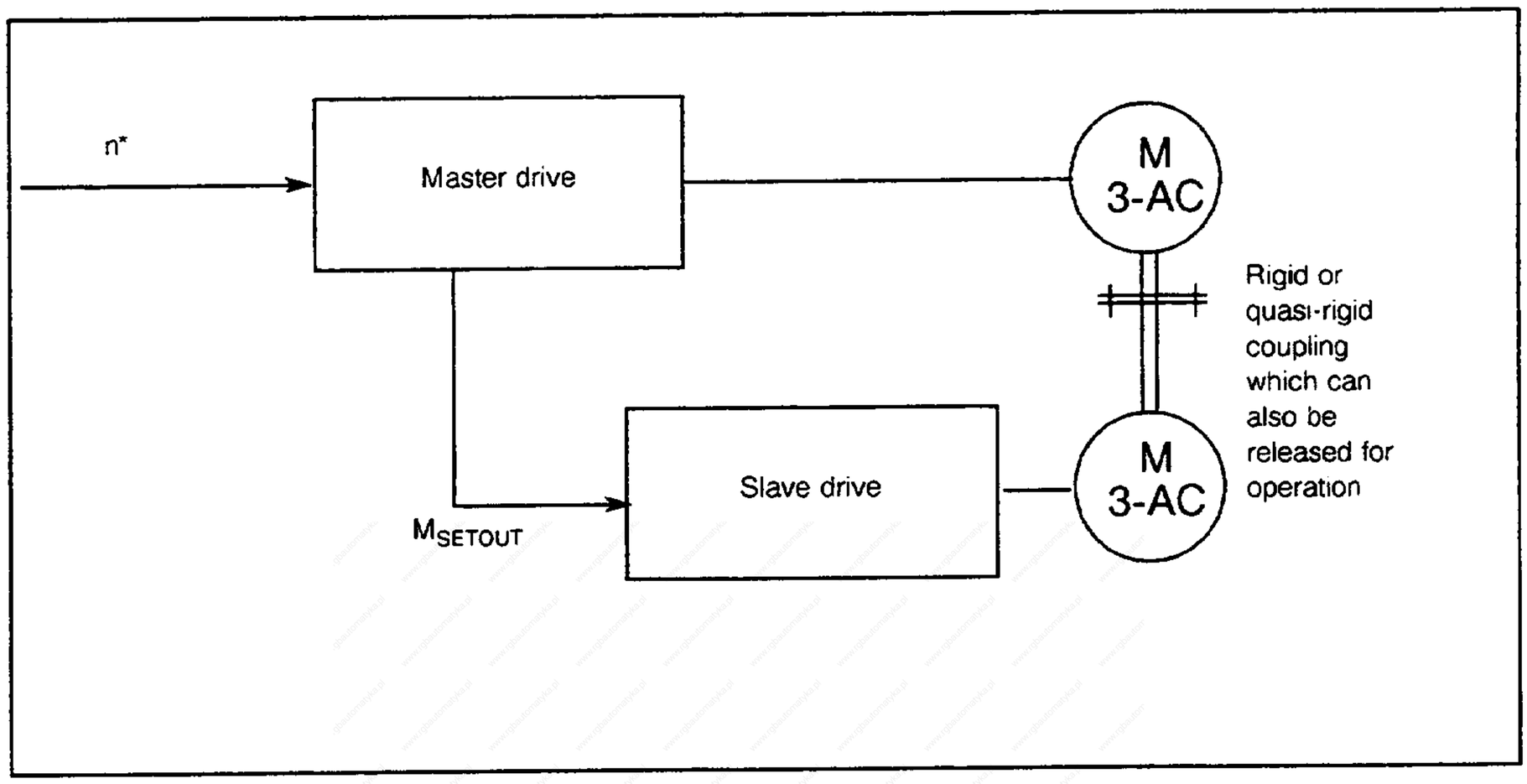

Block diagram of a coupled drive

- Rigid drive coupling

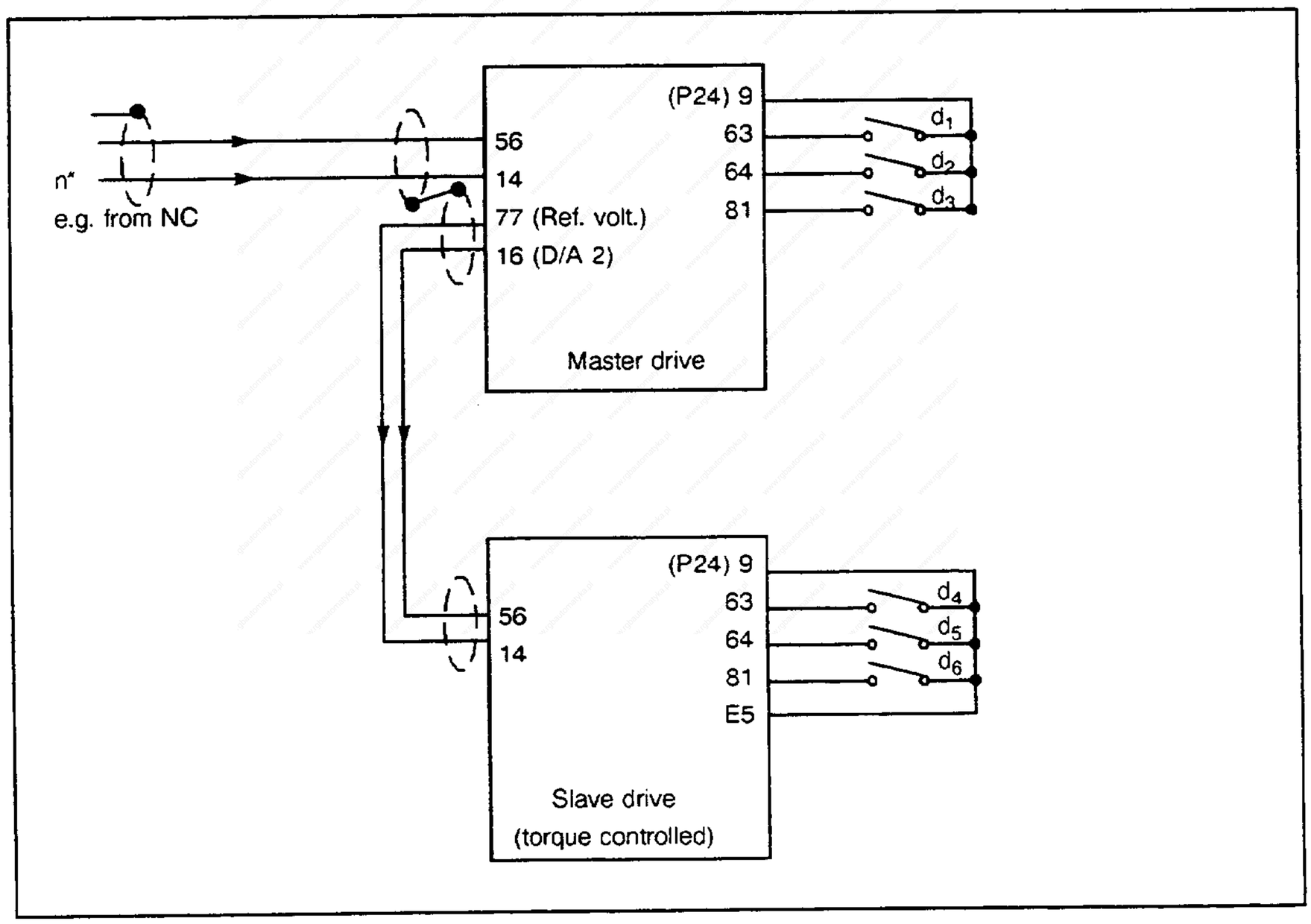

Wiring of the gating logic for rigidly coupled drives

Master drive:	D/A 2:	Actual torque setpoint for open-loop torque control (address 0C6EH in P-068)
Slave drive:	Term. E5:	Open-loop torque control (4 in P-085)

© Siemens AG 1992 All Rights Reserved

The diagram illustrates the wiring of the gating logic for the configuration where the drives are never decoupled in operation. With this type of control, for all static and dynamic drive loads, the coupling must have a no-torque condition, i.e. the machines must never drive each other.

If two different machines are used, or with different gearbox ratios, the motors should not be operated dynamically at the torque limit. Speed changes should only be realized via the master drive setpoint channel.

The drives coast down when the pulses are inhibited.

The ramp-function generator (parameters P-016 and P-017) must be set, so that the drives never reach torque limiting during dynamic operation.

Separate control relays should be used for the master and slave drives (e.g. both terminals 63 should not be switched with 1 contact), so that both 24 V power supplies of the drives remain isolated with respect to each other.

- **Quasi-rigid drive coupling**

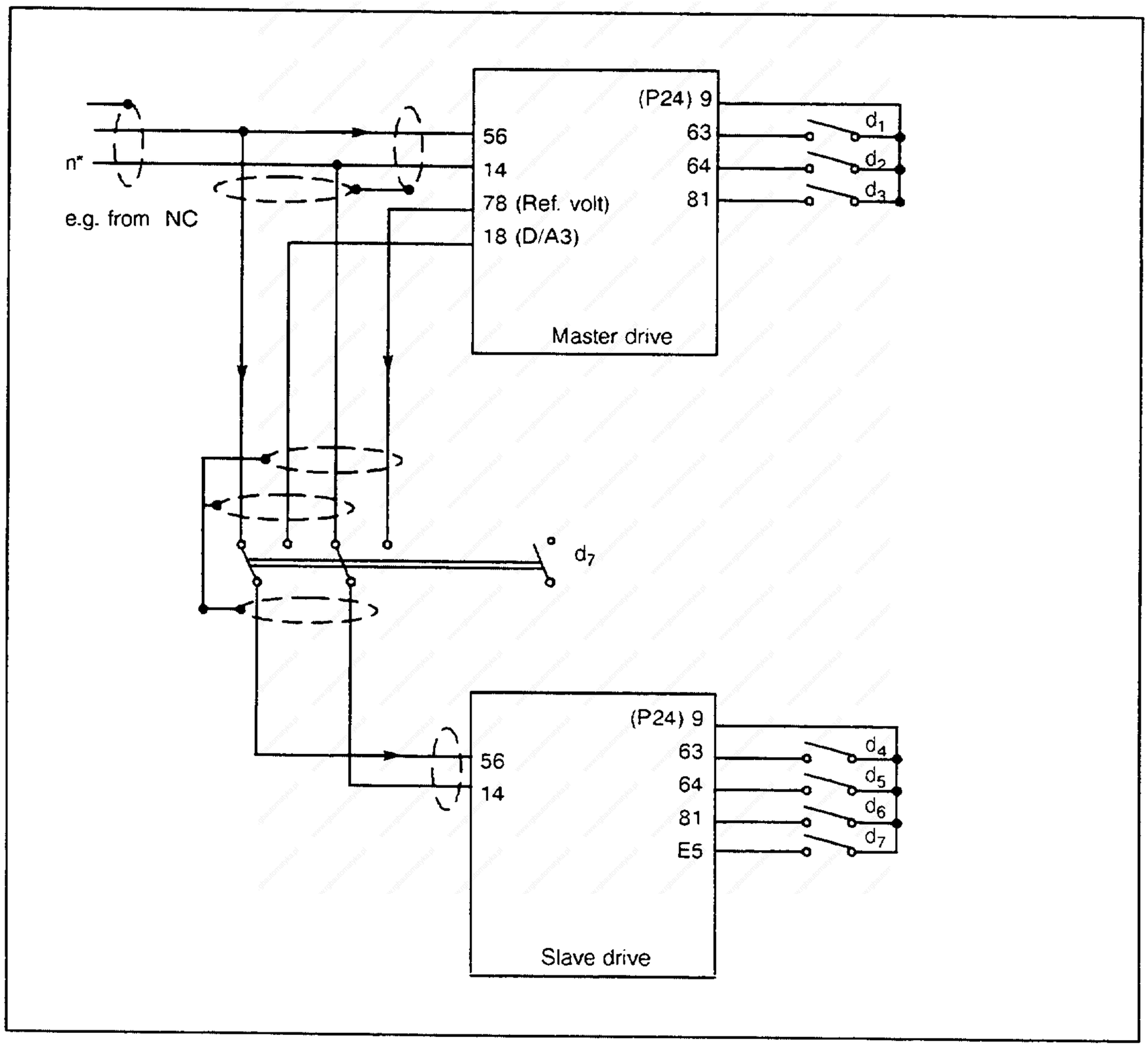

Wiring of the control logic for quasi-rigid drive coupling

© Siemens AG 1992 All Rights Reserved

Master drive:	D/A 3:	Actual speed setpoint for open-loop torque control (address 304CH in P-076)
Slave drive:	Terminal E5:	Open-loop torque control (4 in P-085)

The diagram shows the control logic wiring for the application where both drives can be operated decoupled, e.g. if the motors are coupled through a workpiece. In this case, the drives must be able to be operated coupled and also separately, in which case both drives require their own speed control.

Relay D7 switches the slave drive from closed-loop speed control to closed-loop torque control. This changeover must be interlocked so that it is only possible if it is guaranteed that both motors are mechanically coupled (checkback signal).

The "separate closed-loop speed control" mode must only be possible if the motors are not coupled. This mode must be selected via terminal 64, i.e. the speed setpoint must be switched to both drives, and the drive which should not run, does not receive a controller enable signal.

© Siemens AG 1992 All Rights Reserved

2.4 Options

The following options are available for the SIMODRIVE 660 converter system

- External heat dissipation
- Flange for connecting external heat dissipation
- Program for fast start-up using a PG/PC

2.4.1 "PG/PC coupling" option

The start-up of the main spindle drive can be made far easier using the RS 232 interface, available as standard, and a PG750 programming unit or an AT-compatible PC.
The control software for the PG/PC is also optionally required (refer to Section 2.9, type designation).

The drive parameters are combined in logical blocks and displayed with plain text on the PC screen (PG). The user is helped in parameterizing the drive with user prompts. The user can change parameters online in the transistor PWM inverter or in a file. The file can then be transferred into the transistor PWM inverter. This thus simplifies and shortens start-up and parameterization of machine tools of the same type.

It is also possible to optimize a drive, to transfer the values into the EEPROM, and to store the EEPROM on a floppy disk via the PG/PC. This data can then be used on any of the identical machines with the same software release.
The connection between the transistor PWM inverter and the PG/PC is realized with a connecting cable, type 6FC9348-2T□. At the PC (PG) it is inserted in the COM1 socket in the rear side of the housing. A special interface board is not necessary. The transmission rate is 4800 baud.

Please refer to the Instruction Manual "Start-up software for the 611/660 transistor PWM inverter" for detailed information regarding the PC/PG coupling, Order No.: 6SC6600-7EB61.

2.4.2 "External heat dissipation" option

With this equipment, the cooling air circuit for the power section of the converters is separated from the inside of the machine tool cubicle. The power section losses in this case must not be taken into account when calculating the cubicle cooling. The incorporated standard filter element removes particles having a diameter greater than 5µm.

The "external heat dissipation" option includes a complete set with cubicle fan, hose connections, outlet filter and connecting flange. Converters can also be retrofitted with the "external heat dissipation" option.

The total hose length must not be greater than 1.5 m in order to ensure the required air flow rate.

The connecting flange can be ordered with the option "external heat dissipation" connecting flange.

2.4.3 "Flange for connecting external heat dissipation" option

The cooling air ducts of the converter power section are equipped with flanges top and bottom for connecting the PVC hoses.

© Siemens AG 1992 All Rights Reserved

2.5 Start-up

SIMODRIVE 660 digital transistor PWM converters can be easily started-up and adjusted using the incorporated six-digit display and a simple keypad. In normal operation, the display indicates the operating statuses. When a fault condition occurs, the fault which led to converter shutdown is displayed.

Parameters are factory set, but can be changed when required.

Drive parameters can be changed using two keys, which raise or lower the value displayed. The displayed value changes faster the longer the key is depressed. The display mode is changed using the **P** key (operating display/number of the operating display or display of the parameter value/parameter number).

Parameters are entered in physical units, percentages or in hexadecimal format.

Customer-specific parameters can be completely entered with an appropriate software board for converter series. The data of the particular AC motor required for the field calculation are transferred completely from a file (EPROM) when the motor ID is entered.

Start-up can be executed, menu-prompted, using a programming unit or PC-AT. If the settings have been optimized, the data set can be stored in the programming unit, and can be completely transferred to the next converter when identical machine tools are started-up.

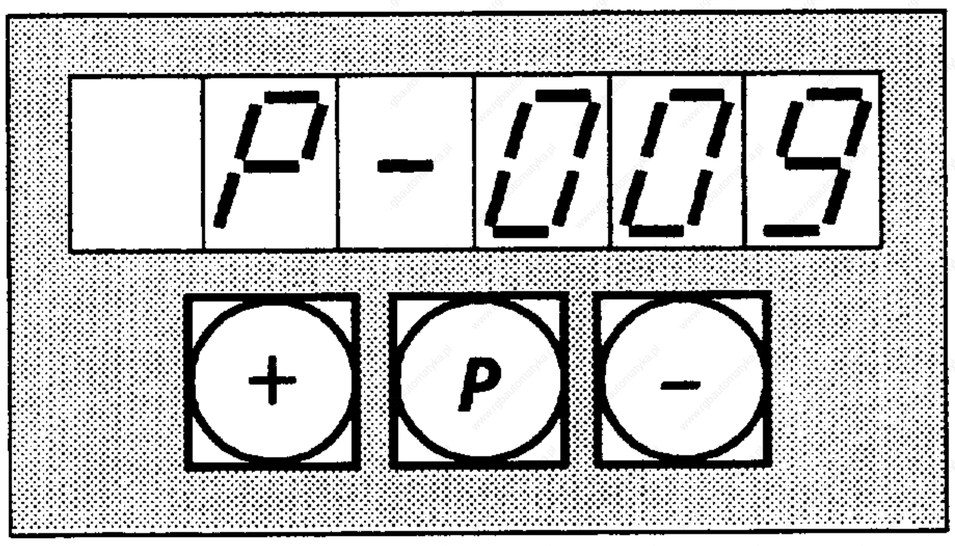

Display and operator control elements

Please refer to the Instruction Manual SIMODRIVE 660, Order No.: 6SC6600-7BC00 (English) for detailed start-up information.

2.6 Interfaces

2.6.1 Signal inputs

2.6.1.1 Analog signals

- Speed setpoint 1 (terminal 56/14)
  0... ± 10 V Differential input $R_E = 20\ k\Omega$
- Speed setpoint 2 (terminal 24/8)
  0... ± 10 V Differential input $R_E = 20\ k\Omega$
- Torque setpoint (terminal 56/14), alternative to speed setpoint 1

2.6.1.2 Binary signals

Binary signals which can be controlled, floating, with either an internal converter- or external voltage.

- **Pulse enable (terminal 63)**
  If this terminal is de-energized, the pulses in the line and motor-side converters are cancelled and the motor coasts down.

- **Controller enable (terminal 64)**
  If this terminal is de-energized, the drive is ramped-down to $|n_{act}| < n_{min}$. The motor-side pulses are inhibited after n_{min} has been reached. Depending on parameter P-053, the line-side converter is also influenced:

  Bit 7 = 0: (factory setting) (0000 H)
  The pulses for the line and motor-side converters are cancelled.
  → DC link control and step-up controller are inhibited.

  Bit 7 = 1: (0080 H)
  Involves SIMODRIVE 660 together with SIMODRIVE 611 servomodules.
  Only the motor-side converter pulses are cancelled.
  → DC link control and step-up controller are enabled, i.e. feed drives can be supplied from the DC link.

If the gating pulses are inhibited after the motor has come to a standstill, full torque can only be obtained approximately 400 ms after the motor has been switched-on again as it must first be magnetized.

- **Ramp-function generator fast stop (terminal 81)**
  If this terminal is de-energized, the drive brakes along the torque limit down to standstill. At standstill, the motor remains magnetized, and can thus instantaneously provide full torque after terminal 81 has been enabled.
  Optional: Pulse inhibit after $|n_{act}| < n_{min}$. Function can be selected via control parameter.

If terminals 63, 64 and 81 are simultaneously opened, the following priorities are valid: terminal 63 > terminal 81 > terminal 64

© Siemens AG 1992 All Rights Reserved

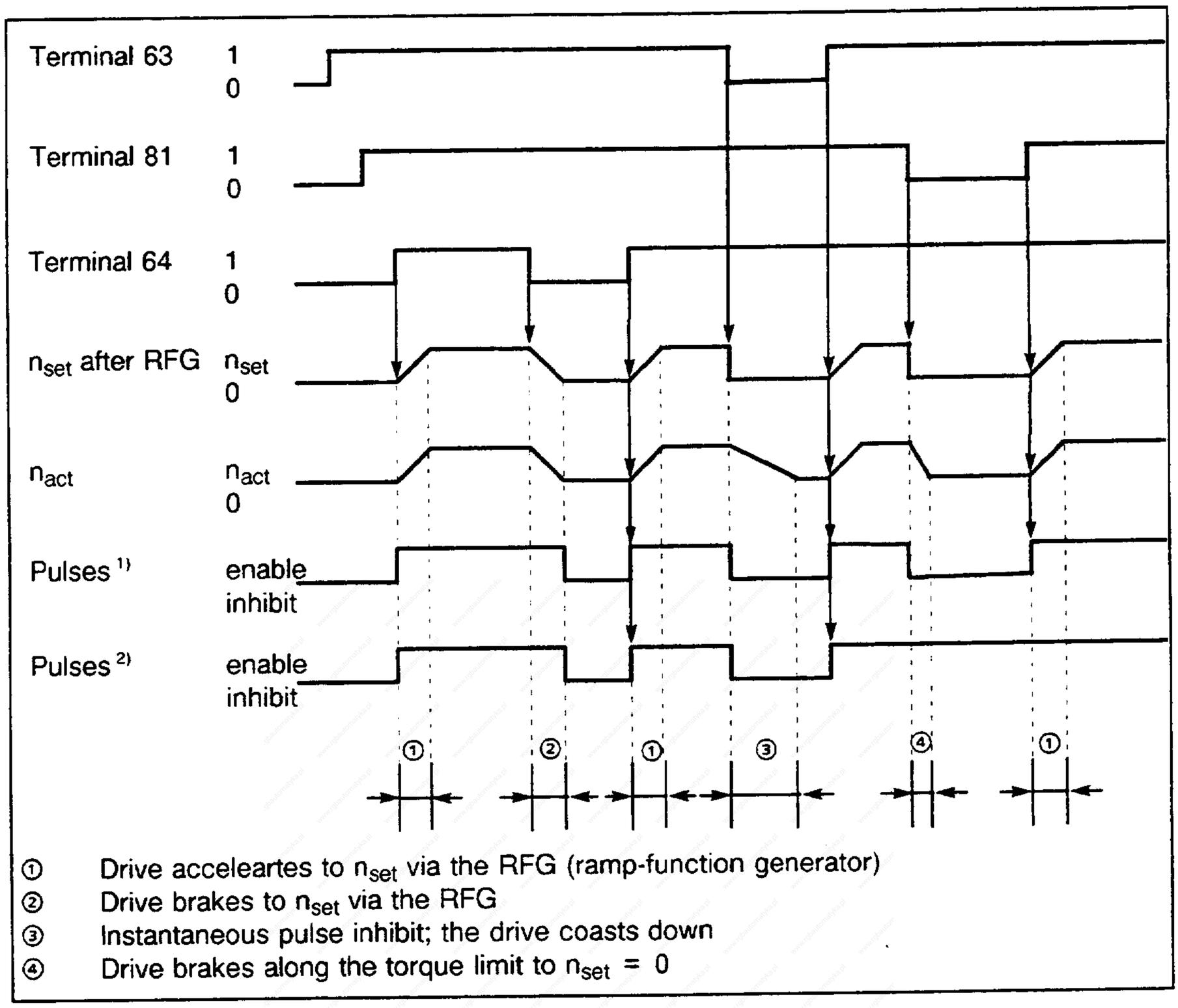

Enable signals

Note: Use of the controller enable (terminal 64) and ramp-function generator fast stop (terminal 81) signals:

If terminal 64 (controller enable) is used to brake the drive to standstill, when the motor comes to a standstill, it is switched into the no-voltage condition. This means that the motor magnetic field decays. If at restart, a speed setpoint is entered at the same time as the controller is enabled, the motor can only provide full torque after aproximately 400 ms, as it must first build-up the motor magnetic field.

Thus, it is recommended for critical time applications, such as for example, automatic tool change, that terminal 81 is used (ramp-funtion generator fast stop) to brake the drive to standstill. When the motor comes to a standstill, zero speed setpoint is digitally entered. If the motor shaft must gently giveway to an external torque, terminal 111 (torque limit) should be simultaneously energized. If terminal 81 is re-energized to start the motor, the drive starts instantaneously and can accelerate with maximum torque.

- **Torque limit (terminal 111)**
  Depending on whether an adjustable switch-in speed has been reached, when the terminal is energized, the motor torque is reduced to an adjustable value.
- **Set ramp-function generator to zero (terminal 62)**
  The ramp-up and ramp-down times of the ramp-function generator are switched to "0" when this terminal is energized.

1) Ramp-function generator fast stop with internal pulse cancellation
2) Ramp-function generator fast stop without internal pulse cancellation

© Siemens AG 1992 All Rights Reserved

- **Gearbox stage selection (terminals 117, 118, 119)**
  Up to eight different settings can be entered for the following parameters depending on the status of terminals 117-119:
  - Normalization: Speed setpoint
    Torque setpoint
  - Speed controller setting
  - Torque limit
  - Response threshold $|n_{act}| < n_{min}$ signal
    $|n_{act}| < n_x$ signal
    $n_{act} = n_{set}$ signal
    $|M_d| < M_{dx}$ signal

  The following is valid:

Gearbox stage	Term.119	Term.118	Term.117
1	L	L	L
2	L	L	H
3	L	H	L
4	L	H	H
5	H	L	L
6	H	L	H
7	H	H	L
8	H	H	H

  For example, the control parameters for gearbox stage changeover are changed over via these terminals.

- **Select input terminal (terminals E1 to E8)**
  The select input terminals, terminals E1 to E8 are freely programmable. Each select terminal is assigned a control parameter in which the code number of the selected function is entered. The particular input terminal is disabled with code number "0"
  The following functions can be selected:
  - **C axis/feed control**
    Feed control (C axis) is selected with H.
    In this case, the C-axis-specific parameters are activated: Normalization, speed setpoint C axis (dependent on the gearbox stage)
    Offset correction n_{set} C axis
  - **Setpoint enable**
    The speed setpoint is set to zero (digital) when cancelled (L). The drive brakes along the ramp-funtion generator ramp and remains speed controlled at standstill.
  - **Reset fault memory**
    When selected (H) a fault message is acknowledged after the fault cause has been removed.
    Prerequisite: No controller enable
  - **M19 operation**
    When selected (H) a finer speed evaluation/speed setpoint normalization (dependent on the gearbox stage) is selected, depending on a switching speed which can be parameterized, to optimize the M19 NC function (oriented spindle stop).
  - **Open-loop torque control**
    When selected (H), an analog setpoint (0 to ±10 V) at terminal 56/14 is interpreted as torque setpoint, and the drive is operated in the open-loop torque control mode (function required for master/slave drives for controlling the slave drive).

© Siemens AG 1992 All Rights Reserved

WARNING

The speed controller is not active in this mode, i.e. the motor can, depending on the load, accelerate to inadmissibly high speeds.

- **Oscillation**
  When selected (H) an oscillating speed setpoint is internally generated to aid mechanical gearbox stage changeover. The frequency and amplitude of the oscillation setpoint can be adjusted.
- **Integrator inhibit, speed controller**
  When selected (H), the speed controller integrator is disabled.
- **Suppress fault 11**
  When selected (H), fault message F-11 (speed controller at its limit) is suppressed. This is required for the "travel to end stop" function.
- **Speed setpoint smoothing**
  When selected (H), speed setpoint smoothing is activated. The time constant can be parameterized.

2.6.2 Signal outputs

2.6.2.1 Analog signals

- **Select analog outputs**
  The select analog outputs (D/A converters 1, 2, 3) are provided for connecting display instruments, and are freely programmable.
  Resolution of D/A converters 1 and 2: 8 bit, D/A converter 3: 14 bit

  The select analog outputs are accessible via terminals and test sockets.

	Terminal/ref. potential	Test socket/ref. potential
D/A conv. 1:	Terminal 75/76	D/A1/M
D/A conv. 2:	Terminal 16/77	D/A2/M
D/A conv. 3:	Terminal 18/78	D/A3/M

  The select analog outputs can be normalized.

  The following measuring signals can be assigned to the select analog outputs:

  - **Speed actual value (absolute value)** (factory setting D/A converter 1) 10 V = n_{max}, can be normalized
  - Utilization, **torque/output actual value** (factory setting: D/A converter 2)

    The following measured values are output as a function of the speed range:

    $n < n_{rated}$: $|M_d/M_{dlimit}|$ 10 V ≙ M_{dlimit}, can be normalized

    $n \geq n_{rated}$: $|P/P_{limit}|$ 10 V ≙ P_{limit}, can be normalized

    M_{dlimit}: Currently selected torque limit

    P_{limit}: Currently effective power limit ($M_{dlimit} \cdot n_{act}$)
  - **Torque setpoint (absolute value)**
    $|M/M_{rated}|$ can be normalized, preset for 5 V ≙ M_{rated}
  - **Power setpoint (absolute value)**
    $|P/P_{rated}|$ 5 V ≙ P_{rated}
  - **Diagnostic signals**
    (refer to the Instruction Manual SIMODRIVE 660 main spindle drives, Order No.: 6SC6600-7BC00)

© Siemens AG 1992 All Rights Reserved

2.6.2.2 Binary signals

Signals are output via relays with changeover contacts (floating).

- **Ready relay (terminals 72/73/74)**
  Signaling function can be selected per control parameter:
  - "Ready"
    Signal is active if a fault is not present and the control is active
  - "No fault"
    Signal is active, if the electronics power supply is switched-on and there is no fault.

- **Relay $n_{act} = n_{set}$ (terminals 127/189/128)**
  The signal is active, once the drive has accelerated up to the set speed. The tolerance bandwidth can be selected.

  Speed fluctuations due to load changes do not cause the relay to switch.

- **Select relay (terminals A11/189/A12; A21/189/A22; A31/189/A32; A41/289/A42; A51/289/A52; A61/289/A62)**
  Six select relays can be freely programmed via control parameters.

  The following signals can be assigned to the select relays:

  - "$|M_d| < M_{dx}$"(factory setting, terminals A11/189/A12)
    Relay drops-out for $|M_d| > M_{dx}$, M_{dx} can be set.
  - "$|n_{act}| < n_{min}$" (factory setting, terminals A21/189/A22)
    Relay pulls-in at $|n_{act}| < n_{min}$, n_{min} can be set.
  - "$|n_{act}| < n_x$" (factory setting, terminals A31/189/A329)
    Relay drops-out at $|n_{act}| < n_x$, n_x can be set.
  - "Motor overtemperature alarm" (factory setting, terminals A41/289/A42)
    The relay drops-out when the motor develops an overtemperature condition or the temperature sensor circuit is interrupted.
    If the motor load is not reduced and the temperature continues to increase, the converter is tripped after approximately 4 minutes and a fault message issued.
  - "Heatsink overtemperature alarm" (factory setting, terminals A61/289/A62)
    The relay drops-out when the heatsink develops an overtemperature condition.
    When the relay drops-out, the converter is tripped after approximately 2 minutes and a fault message issued.
  - "Variable relay function 1" (factory setting, terminals A51/289/A52)
  - "Variable relay function 2"
    Using the variable relay functions, any program variable can be monitored. To realize this, the variables to be monitored (address), the response value as well as the pull-in- and drop-out delay and hysteresis of the relays are programmed via parameter.

Please note when designing external interface controls, that when fault conditions develop and when the electronics power is switched-off, that the relays drop-out independent of the assigned signaling function.

© Siemens AG 1992 All Rights Reserved

2.6.2.3 Encoder signals

The motor encoder signals are provided as a square-wave pulses at connector X113 of the control board for external use. This output is fed through a driver stage in the PWM converter so that it is decoupled from the control.

An adapter cable is available for this connection.

2.6.2.4 Display messages

Measured values, operating displays or fault messages are alternatively displayed on the six-digit display.

- **Operating displays**:
  - PWM converter ready
  - Enable status
  - Control type
  - Torque direction
  - Gearbox stage
  - Status of the digital inputs
  - Status of the digital outputs
- **Measured values**:
  - n_{set}
  - n_{act}
  - P/P_{max} in %
  - M/M_{max} in %
  - Motor temperature
  - Active terminal functions
- **Fault messages:**
  (several simultaneous faults can be called-up one after another)
  - Supply fault
  - Incorrect phase sequence
  - Defective encoder system
  - Speed controller at its limit, speed actual value missing
  - Motor overtemperature
  - Converter overtemperature
  - Incorrect motor/converter assignment
  - Temperture sensor
    interrupted
    short-circuited
  - Internal power supply faulted
  - DC link overvoltage
  - DC link overcurrent
  - DC link charge fault
  - Supply synchronizing error

© Siemens AG 1992 All Rights Reserved

2.7 Engineering information for dimensioning the DC link for a combination drive consisting of SIMODRIVE 660 and SIMODRIVE 611

The basis for the design is the DC link power requirement P_Z for the feed drives. The technical description 1FT4/5 and SIMODRIVE 611 (Order No. 6ZB5420-0AG02-0BA1), is used for the steady-state operating condition.
The DC link power provided from SIMODRIVE 660 for the feed drives is calculated as follows:

$$P_{Z,feed} = P_{on,\,cont} - \frac{P_{motor\ shaft\ main\ spindle}}{\eta}$$

$P_{motor\ shaft,\ main\ spindle}$	–	output used at the main spindle motor shaft [kW]
$P_{on,\ cont.}$	–	continuous infeed power of the SIMODRIVE 660 according to the PWM converter technical data
$P_{Z,feed}$	–	usable DC link reserve for feed drives [kW]
η	–	efficiency (0.85)

$$P_Z \leq P_{Zfeed}$$

P_Z	–	DC link power of the feed drives according to the caculation schematic, technical description, AC feed drives [kW]

For dynamic operating conditions it should be checked that the SIMODRIVE 660 limits are not exceeded. The peak powers of all axes should be determined which are simultaneously traversing, accelerating or braking:

$$P_{calc\ III} = 0.8 \cdot V_{DClink} \cdot I_{max} \frac{n}{n_N}$$

$P_{calc\ III}$	–	Expected peak infeed power when driving [kW]
$V_{DC\ link}$	–	DC link voltage (for SIMODRIVE 660 = 600 V) [V]
I_{max}	–	Peak current set for the axis [A]
n/n_N	–	Max. axis speed referred to the rated motor speed
0.8	–	Approximation value, which takes into account the EMF/$V_{DC\ link}$ ratio as well as motor and converter losses

The sum of $P_{calc\ III}$ should be calculated for all of the axes which are simultaneously accelerated or braked:

$$\sum P_{calc\ III} \leq P_{on/cont.}$$

If necessary, the main spindle should be taken into account. The main spindle power should always be taken into account if the accelerating time to the transition speed < 500 ms.

© Siemens AG 1992 All Rights Reserved

2.8 Technical data

Supply voltage	3-ph. AC 400 V (–10%/ + 6%)
Rated frequency	50/60 Hz
Output voltage	3-ph. AC 0 to 430 V
Output frequency	0 to 600 Hz
Efficiency at rated operation	approx. 95%
DC link voltage	600 V DC
Pulse frequency	2.5/3.3 kHz[1] can be parameterized
Permissible ambient temperature in operation	0 °C to 40 °C (with derating up to 55 °C)
during transport and storage	–25 °C to 85 °C

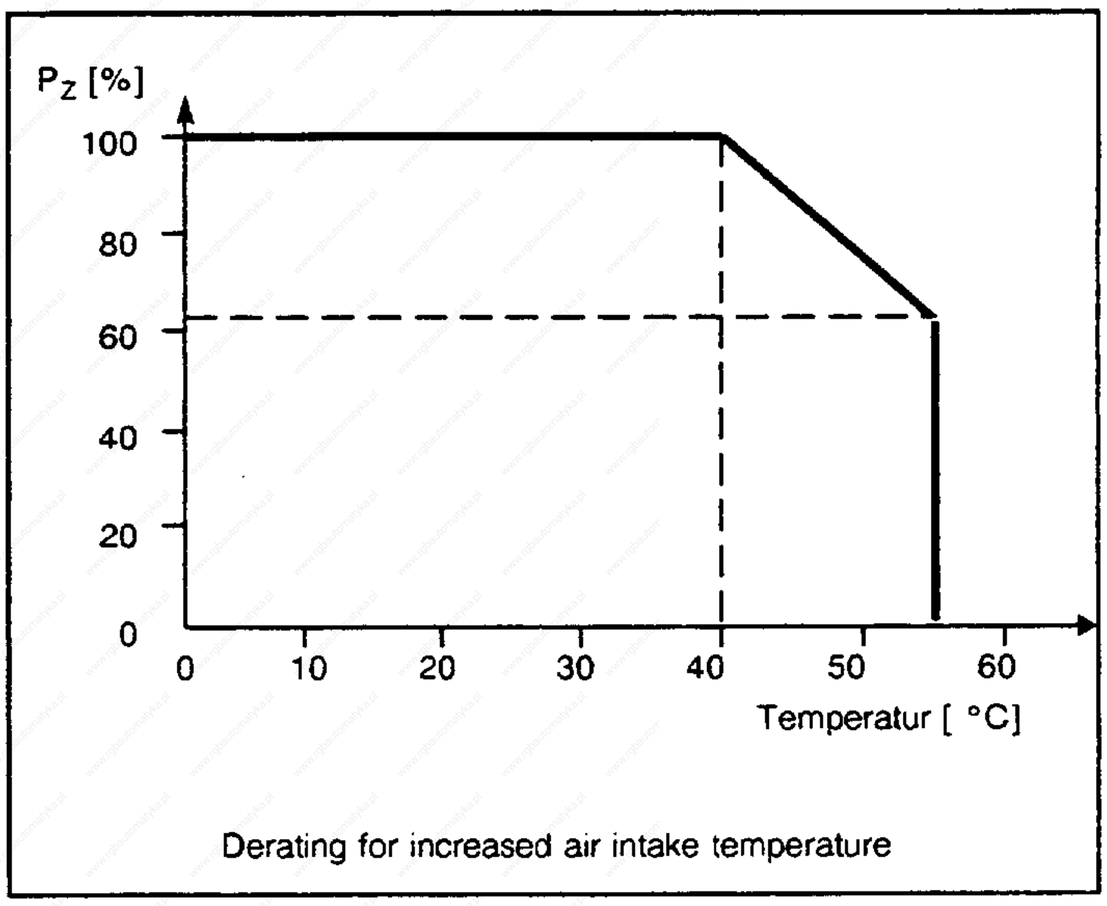

Derating for increased air intake temperature

Insulation	DIN VDE 0160 for application locations according to DIN VDE 0110, insulation group C
High-voltage test	Converters are tested according to VDE 0160/5.88
Degree of protection	IP 00 according to DIN 40050 and IEC 144
Permissible humidity rating	Class F according to DIN 40040 Annual average relative humidity ≤ 75 % 30 days annually, continuous 95 % on the other days, occasionally 85 %
Cooling type	Forced cooled Cooling air flow: 6SC6608 approx. 230 m³/h 6SC6612 approx. 300 m³/h 6SC6620 approx. 450 m³/h

1) Derating at 3.3 kHz

© Siemens AG 1992 All Rights Reserved

Installation altitude

The specified load values are referred to installation altitudes up to 1000 m above sea level. For installation altitudes above 1000 m, the load values should be reduced according to the diagram below.

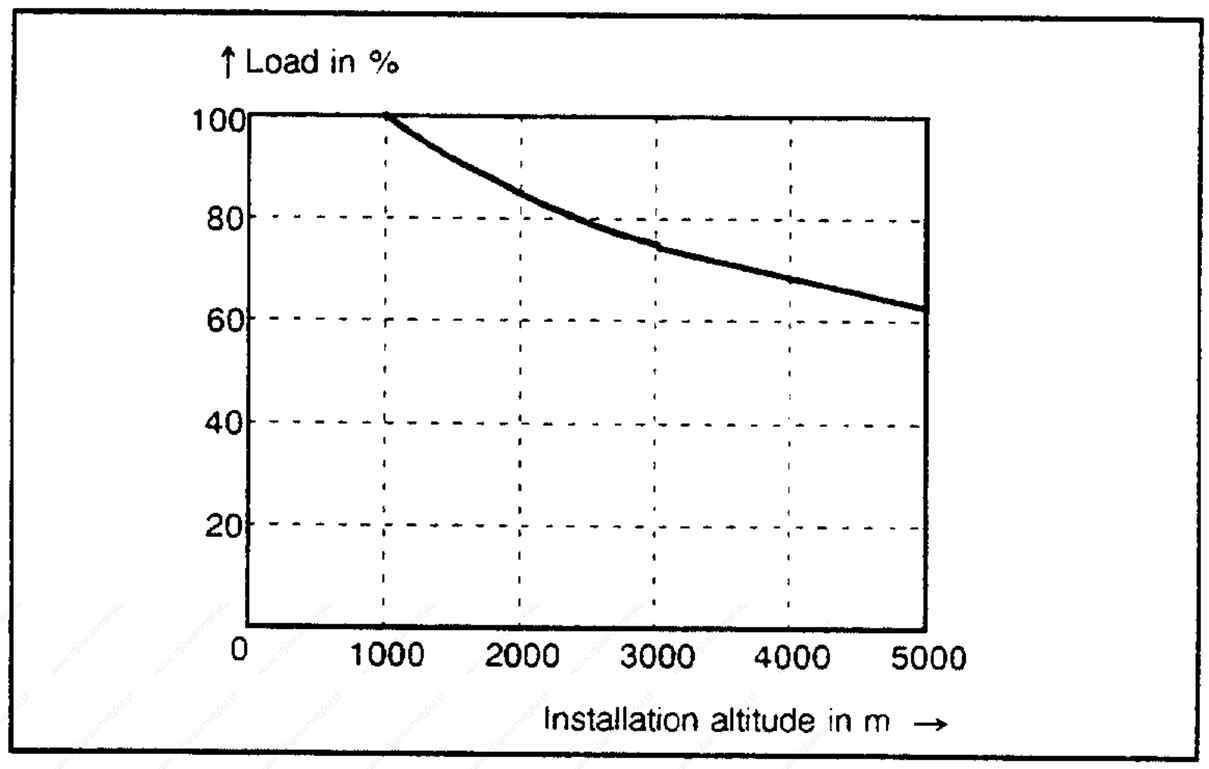

PWM converter Order No.	Current drawn from the supply at rated voltage [A]	Current drawn from the supply at under-voltage [A]	Output current [A]	Apparent output power	Continuous infeed power	Continuous regenerative power	Max. power loss	Input fuses (incorporated) [A]	Weight approx. [kg]
08-□	72	82	85	60	56	45	1500	125	70
12-□	108	123	120[1)]	90	87	70	2300	200	90
20-□	180	205	200[2)]	150	120	100	3600	315	225

Technical data of the PWM converter

1) S6-60% (10 min cycle) 140 A, S6-40 % (10 min cycle) 150 A
2) S6-60% 250 A

© Siemens AG 1992 All Rights Reserved

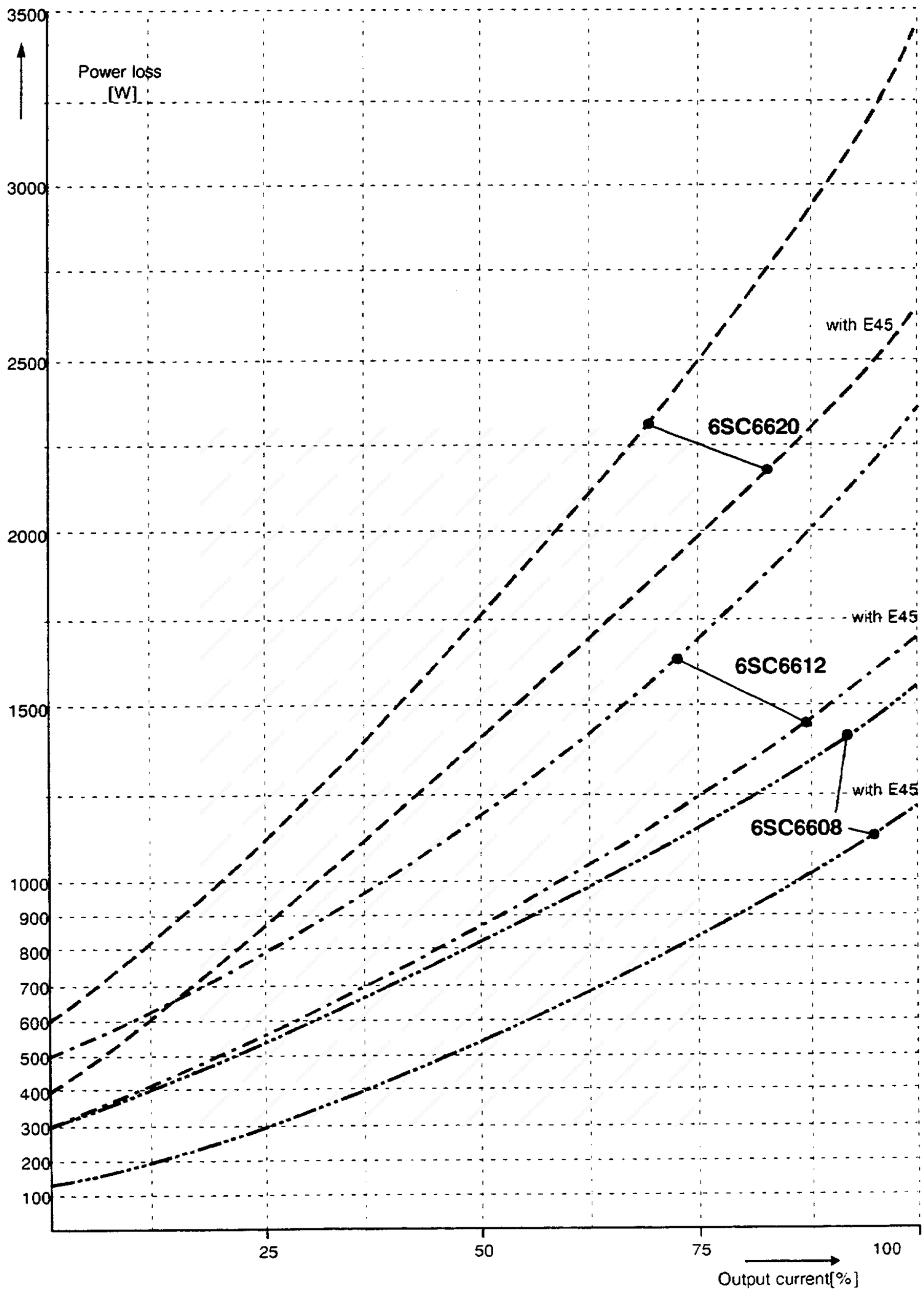

Max. power loss at rated voltage as a function of the output current and with power loss dissipation, option E45 (external heat dissipation).
(The difference between the two converter characteristics corresponds to the heat which is not dissipated)

© Siemens AG 1992 All Rights Reserved

2.9 Product designation

The product designation (which is also the Order No.) consists of a combination of digits and letters.

The first block consists of seven positions and designates the PWM converter type, or for accessories, the allocation to a product family. Additional features are coded in the second block.

2.9.1 Converter

Order No. structure:

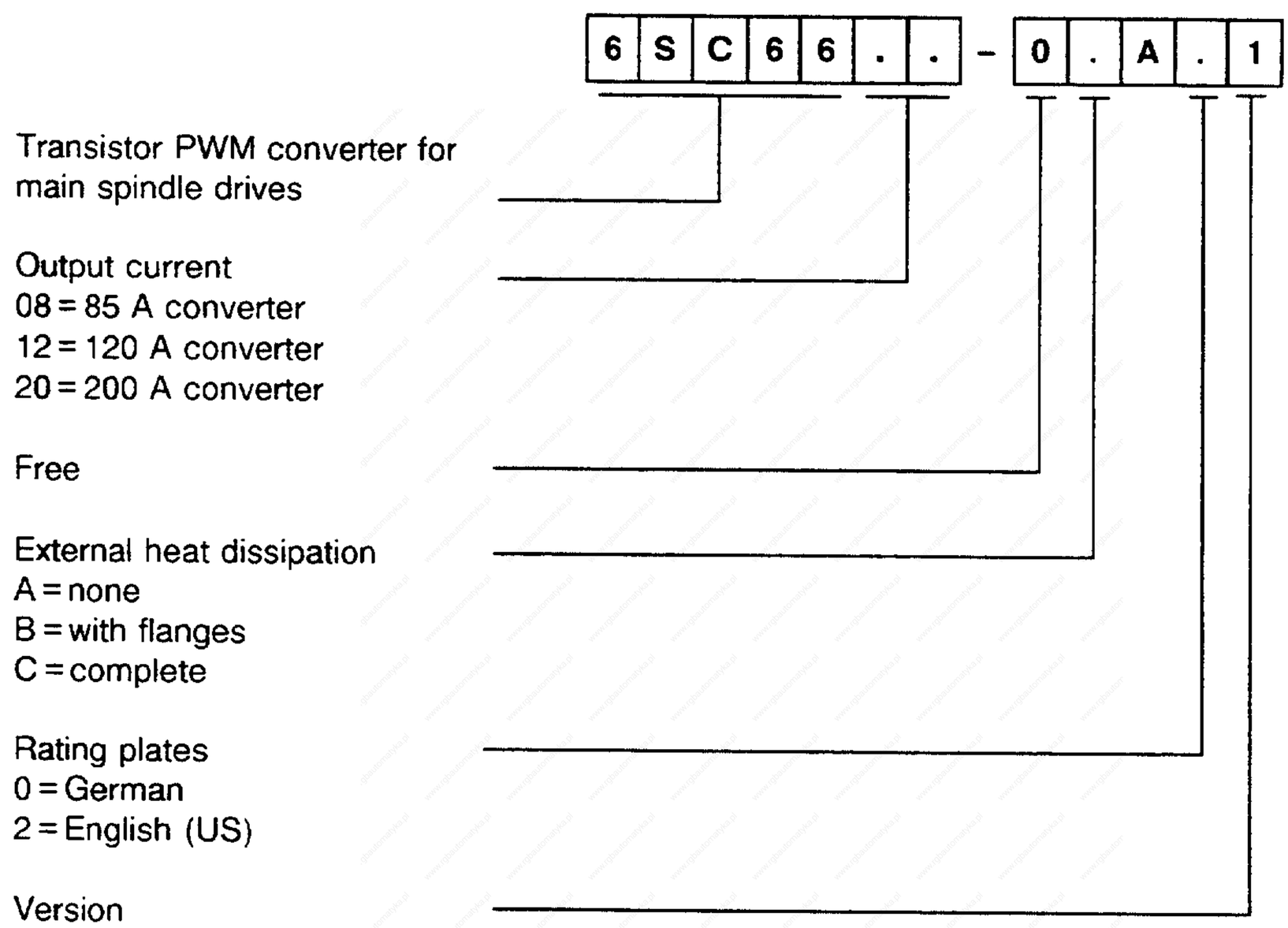

© Siemens AG 1992 All Rights Reserved

2.9.2 Software board

Order No. structure:

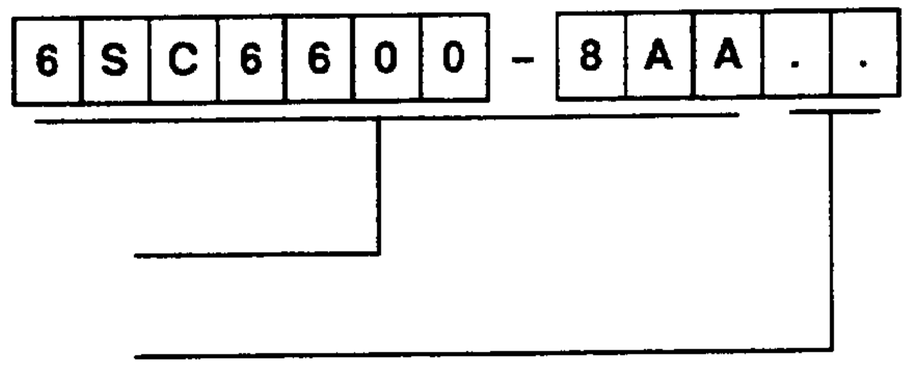

Software board (programmed)

Version
00 = Actual software release
XY = Software release XY

2.9.3 Start-up software for PG/PC

Order No. Structure:

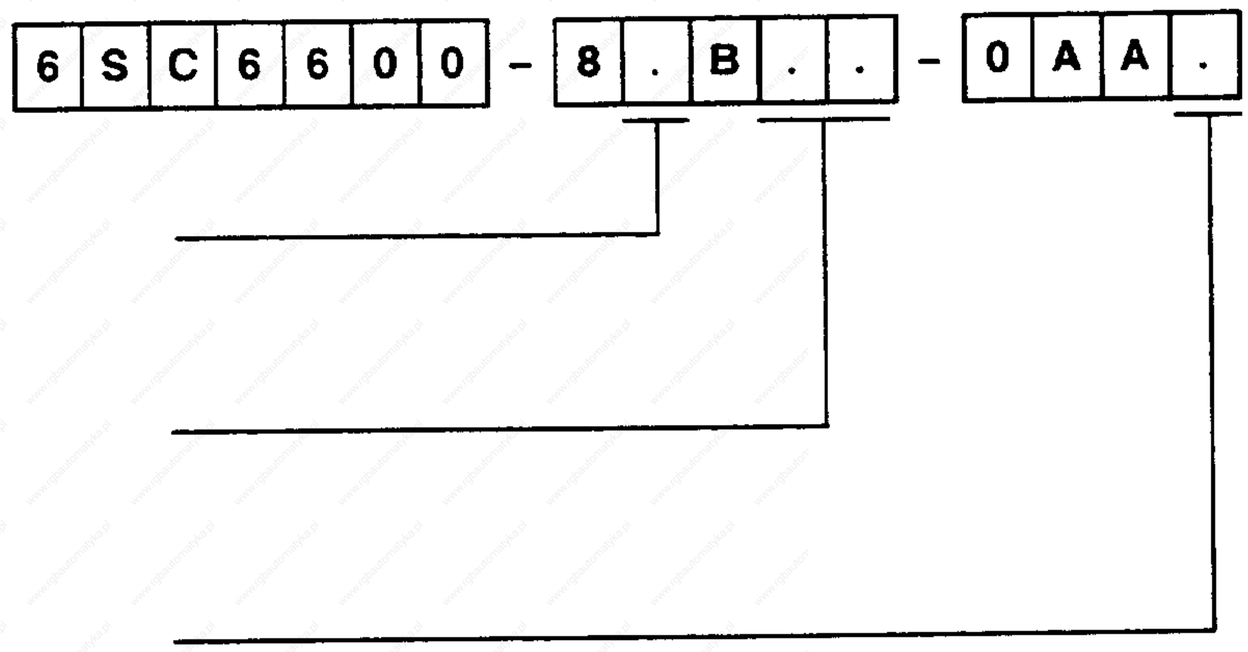

Floppy disk size

B = 5 1/4" floppy disk
C = 3 1/2" floppy disk

Release

00 = Current release
XX = Release XX

Licensing type

0 = Individual license
3 = Master license, 10 uses
4 = Master license, 20 uses
5 = Master license, 50 uses
6 = Master license, 100 uses
7 = Master license, 200 uses

© Siemens AG 1992 All Rights Reserved

3 Matching transformers

3.1 Application

Matching transformers are required, if AC main spindle drives are to be fed from three-phase supplies with voltages other than 3-ph. AC 50/60 Hz 400 V. Generally, for cost reasons, autotransformers are used to transform down the supply voltage to the input voltage for the transistor PWM converter. Transformers with separate windings are only used if the transistor PWM converter is to be completely isolated from the three-phase supply.

3.2 Technical data of the autotransformers

- **Rated input voltage (supply voltage):**
  3-ph. AC 50/60 Hz 500/460/415 V or 3-ph AC 50/60 Hz 220 V
- **Rated output voltage, 3-ph. AC 50/60 Hz 400 V**
- **Short-circuit voltage: Max. 3%, in order to prevent the converter monitoring function responding to a supply voltage waveform which is still permissible according to DIN VDE 0160.**
- **Degree of protection: IP 00 according to DIN IEC 34-5**
- **Design: T55/H (T40/B for 4AP42)**
- **Inrush current limiting: Not required**

Type assignment:

Transistor PWM converter	Min. required transformer rating	Autotransformer primary voltage 3-ph. AC 50/60Hz 500/460/415 V		Autotransformer Input voltage 3-ph. AC 50/60 Hz 220 V	
Type	kVA	Order No.	Weight, approx. kg	Order No.	Weight, approx. kg
6SC6608	55	4AU3971-8XX10-8W	80	4BU4381-1SX10-8X	120
6SC6612	82	4BU4371-8XX10-8W	120	4BU4781-1SX10-8X	160
6SC6620	130	4BU4581-8XX10-8W	135	4BU5381-1SX10-8X	220

Dimensions, refer to Section 5, dimension drawing of the autotransformer.

© Siemens AG 1992 All Rights Reserved

4 Installation instructions

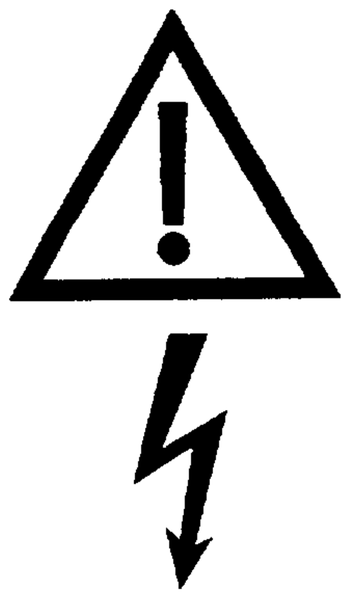

WARNING

This equipment contains hazardous voltages. If this equipment is incorrectly handled it can result in death, severe bodily injury as well as significant material damage.

Therefore when servicing this equipment, please observe all the instructions in this section and on the product labels themselves

- The unit must only be serviced by appropriately **qualified personnel**.
- The unit must be disconnected from the supply, grounded and locked-out **before** any work commences.
- Only spare parts authorized by the manufacturer must be used.
- The specified service intervals and measures must be adhered to as well as the procedures described for repair and replacement.

4.1 PWM converters

4.1.1 Mounting the PWM converter

- The PWM converters are suitable for installation in enclosed electrical rooms (DIN VDE 0558 Part 1, Sections 5.4.3.2.1 and 5.4.3.2.2). This thus provides protection, when operational, against direct contact.
- Please refer to the dimension drawings for the mounting dimensions and position of the retaining points.
- The PWM converters are designed for vertical mounting in cubicles or machine racks. They should be mounted with the infeed and motor connections towards the bottom.
- It should be ensured that air intake and discharge are not restricted. 100 mm must be maintained above and below the PWM converters. The PWM converters must be mounted so that they are protected from conductive dust deposits.
- If several converters are mounted one above the other, the hot air discharged by the lower converter must be kept away from the top converter using air deflection plates, adequate distance between the units, or derating according to Section 2.8.

4.1.2 Connecting-up the PWM converter

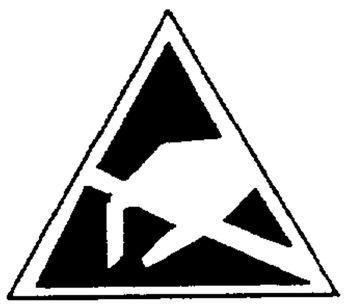

CAUTION

The transistor PWM converter boards contain components which can be destroyed by electrostatic discharge (ECB).

The information provided in Section 4.1.3 should be observed.

© Siemens AG 1992 All Rights Reserved

- Connect-up the PWM converters according to the recommended circuit.

CAUTION

Only grounded supplies should used. Ensure that a clockwise phase sequence is available also for the connection between the PWM converter and AC motor.

- The ground cables for the supply and motor feeder must be connected together at the grounding bar (grounding studs) of the PWM converter. If the motor housing is inadequately grounded, capacitive equalization currents flow which cause disturbances in the electronic components (grounding through a high surface area should be ensured through the machine foundation).
- The PWM converter cover plate must be screwed into place during operation in order to ensure a good ground connection.
- The PWM converters are completely protected by the incorporated fuses. The fuses illustrated in the recommended connection are power fuses according to DIN/VDE 0100.
- The setpoints and actual value cables must be screened and routed separately away from the load cables. The encoder cable screens should be connected-up according to the connecting diagram, Section 4.1.5. The control cables for the controller enable signals and the power supply should be routed separately away from the contactor control cables.

The encoder cable should be screened according to the connecting diagram, Section 4.1.5 to ensure proper EMC-proof encoder connection.

- A contactor can be connected between the AC motor and PWM converter for safety-related reasons to provide electrical isolation between the AC motor and the converter output voltage. This contactor must be located between the AC motor and PWM converter, as the DC link still has stored energy even after "supply off".

CAUTION

The contactor **must never** be switched under load. The power transistors can be destroyed by the arc which is formed.

The control should be designed so that it is ensured that this contactor is only switched with the motor pulses inhibited (terminal 63 not energized). Further, terminal 63 should be additionally interlocked with an auxiliary contact of the contactor.

© Siemens AG 1992 All Rights Reserved

Further, a drop-out delay contactor should be used so that even at power failure, the PWM converter buffer time is bypassed. The contactor must bridge the maximum response time of terminal 63 (pulse enable) of 40 ms. For a DC-operated contacter (3TB4.17-0B), this can be simply achieved with a free-wheeling diode (3TX6406-0H) connected across the contactor coil.

CAUTION

If a contactor is connected on the converter supply side **directly** in front of the converter then it should be ensured that this contactor is only switched when the converter pulses are inhibited (terminal 63). A minimum delay time of 40 ms must be maintained between pulse inhibit and contactor switching. If this delay is not maintained, fuses could be blown or thyristors destroyed.

- The supply reactance means that fuses are not blown and the converter is not damaged if a power failure occurs during operation.
- Also refer to the terminal diagram.

Observe the discharge time (approx. 4 min.) of the DC link capacitors!

- The PWM converter is maintenance-free if the information in the mounting instructions is observed.
- We recommend that the PWM converter is kept clean using dry, oil-free compressed air in order to prevent voltage arcing and restricted cooling.

© Siemens AG 1992 All Rights Reserved

4.1.3 Board handling

CAUTION

Boards/components which have this warning symbol (yellow hand with a cross through it on a black triangle) could be destroyed due to electrostatic discharge.

Please observe the following information:

- Electronic boards should only be touched if absolutely necessary.
- The human body must electrically discharged before touching an electronic board. This is simply done by touching a conductive, grounded object immediately beforehand (e.g. bare metal cubicle components, socket protective conductor contact).
- Boards must not come into contact with highly-insulating materials (e.g. plastic foils, insulating desktops, articles of clothing manufactured from man-made fibers).
- Boards must only be placed on conductive surfaces.
- Boards can only be inserted or withdrawn under a no-voltage condition.
- Signal voltages can only be connected to the boards when the supply voltage is switched-on.
- Boards and components should always be stored or transported in conductive packaging (e.g. metalized plastic containers, metal boxes).
- If the packaging is conductive, the boards must be wrapped in conductive materials before packing. For example, conductive foam rubber or household aluminum foil can be used.

© Siemens AG 1992 All Rights Reserved

4.1.4 PWM converter terminals

Power section

Term. No.	Location		Function	Type 1)	Typical voltage	Max. cross-section
U1 V1 W1			Supply	I	3-ph. AC 400 V	50/95 mm² 2)
PE1			Protective conductor	I	0 V	50/95 mm² 2)
U2 V2 W2			Motor connection	O	3-ph. AC 0...430 V	50/95 mm² 2)
PE2			Protective conductor	I	0 V	50/95 mm² 2)
X600. + X600. –			DC link DC link	O O	600 V DC between X600. + and X600.-	10/25 mm² 3) 10/25 mm² 3)
BS	X131	G1	Electronics ground	I/O	0 V	16 mm²

Electronic signals

Term. No.	Location		Function	Type 1)	Typical voltage	Max. cross-section
56 14 24 8	X121 A X121 A X121 A X121 A	N1 N1 V1 V1	Speed setpoint 1 (differential input) Speed setpoint 2 (differential input)	I I I I	±10 V ±10 V ±10 V ±10 V	1.5 mm² 1.5 mm² 1.5 mm² 1.5 mm²
47 46	X121 B X121 A	N1 N1	P10 N10	O O	+10 V referred to X131 – 10 V referred to X131	
75 76 16 77 18 78 Stecker Stecker Stecker	X121 A X121 A X121 A X121 A X121 A X121 A X112 X113 X114	N1 N1 N1 N1 N1 N1 N1 N1 N1	Analog output D/A conv. 1 Ref. potential for D/A conv. 1 Analog output D/A conv. 2 Ref. potential for D/A conv. 2 Analog output D/A conv. 3 Ref. potential for D/A conv. 3 Dig. interface to PG Encoder signals, (buffered) Encoder input, motor temp.	O O O O O O I/O O I	±10 V (3mA) 0 V (3mA) ±10 V (3mA) 0 V (3mA) ±10 V (3mA) 0 V (3mA) +5 V +5 V	1.5 mm2 1.5 mm2 1.5 mm2 1.5 mm2 1.5 mm2 1.5 mm2 Screened cable Screened cable Screened cable

1) I ≙ input O ≙ output
2) 6SC6608 50 mm²/6SC6612 and 6SC6620 95 mm²
3) 6SC6608 10 mm²/6SC6612 and 6SC6620 25 mm²

© Siemens AG 1992 All Rights Reserved

Electronic signals

Term. No.	Location		Function	Factory pre-setting	Type 1)	Typical voltage	Max. cross-section
63	X122 A	N1	Pulse enable		I	+13 V... +30 V	1.5 mm²
64	X122 A	N1	Controller enable		I	+13 V... +30 V	1.5 mm²
81	X122 A	N1	Ramp-funct. generator fast stop		I	+13 V... +30 V	1.5 mm²
111	X122 A	N1	Torque limiting		I	+13 V... +30 V	1.5 mm²
62	X122 A	N1	Zero ramp-up time		I	+13 V... +30 V	1.5 mm²
117	X122 A	N1	Gearbox stages, bit 0		I	+13 V... +30 V	1.5 mm²
118	X122 A	N1	Gearbox stages, bit 1		I	+13 V... +30 V	1.5 mm²
119	X122 A	N1	Gearbox stages, bit 2		I	+13 V... +30 V	1.5 mm²
E1	X122 B	N1	Freely-progr. enable term. 1	C axis	I	+13 V... +30 V	1.5 mm²
E2	X122 B	N1	Freely-progr. enable term. 2	SW enab.	I	+13 V... +30 V	1.5 mm²
E3	X122 B	N1	Freely-progr. enable term. 3	Reset	I	+13 V... +30 V	1.5 mm²
E4	X122 B	N1	Freely-progr. enable term. 4	M-19	I	+13 V... +30 V	1.5 mm²
E5	X122 B	N1	Freely-progr. enable term. 5	MD-control	I	+13 V... +30 V	1.5 mm²
E6	X122 B	N1	Freely-progr. enable term. 6	Oscillat.	I	+13 V... +30 V	1.5 mm²
E7	X122 B	N1	Freely-progr. enable term. 7	Int. inhib.	I	+13 V... +30 V	1.5 mm²
E8	X122 B	N1	Freely-progr. enable term. 8	Free	I	+13 V... +30 V	1.5 mm²
9	X122 A	N1	P 24, external		O	+17 V...+24 V	
9	X122 B	N1	24 V for energizing terminals			max 180 mA	
19	X122 A	N1	M 24 ref. potential		I		
19	X122 B	N1	for input terminals		I		

Relay contacts

Term. No.	Location		Function	Factory pre-setting	Type 1)	Typical voltage	Max. cross-section
72	X114	G1	Ready/ fault		NO	30 V/1.0 A max	1.5 mm²
73.1	X114	G1			I	30 V/1.0 A max	1.5 mm²
73.2	X114	G1			I	30 V/1.0 A max	1.5 mm²
74	X114	G1			NC	30 V/1.0 A max	1.5 mm²
189	X114	G1	Signal, center contact for 127, A1., A2.		I	30 V/1.0 A max	1.5 mm²
128	X114	G1	nact = nset		NC	30 V/1.0 A max	1.5 mm²
127	X114	G1	nact = nset		NO	30 V/1.0 A max	1.5 mm²
A12 2)	X114	G1	Freely-progr. relay function 1	$\lvert M_d \rvert < M_{dx}$	NC	30 V/1.0 A max	1.5 mm²
A11 2)	X114	G1	Freely-progr. relay function 1		NO	30 V/1.0 A max	1.5 mm²
A22 2)	X114	G1	Freely-progr. relay function 2	$\lvert n_{act} \rvert < n_{min}$	NC	30 V/1.0 A max	1.5 mm²
A21 2)	X114	G1	Freely-progr. relay function 2		NO	30 V/1.0 A max	1.5 mm²
A32 2)	X114	G1	Freely-progr. relay function 3	$\lvert n_{act} \rvert < n_x$	NC	30 V/1.0 A max	1.5 mm²
A31 2)	X114	G1	Freely-progr. relay function 3		NO	30 V/1.0 A max	1.5 mm²
A42 2)	X114	G1	Freely-progr. relay function 4	Motor overtemp.	NC	30 V/1.0 A max	1.5 mm²
A41 2)	X114	G1	Freely-progr. relay function 4		NO	30 V/1.0 A max	1.5 mm²
A52 2)	X114	G1	Freely-progr. relay function 5	Free	NC	30 V/1.0 A max	1.5 mm²
A51 2)	X114	G1	Freely-progr. relay function 5		NO	30 V/1.0 A max	1.5 mm²
A62 2)	X114	G1	Freely-progr. relay function 6	Converter overtemp.	NC	30 V/1.0 A max	1.5 mm²
A61 2)	X114	G1	Freely-progr. relay function 6		NO	30 V/1.0 A max	1.5 mm²
289	X114	G1	Signal, center contact for A3...A6.		I	30 V/1.0 A max	1.5 mm²

1) I ≙ Input NC ≙ NC contact NO ≙ NO contact
2) Can be freely-programmed via operator control parameters

© Siemens AG 1992 All Rights Reserved

Position of the converter connections

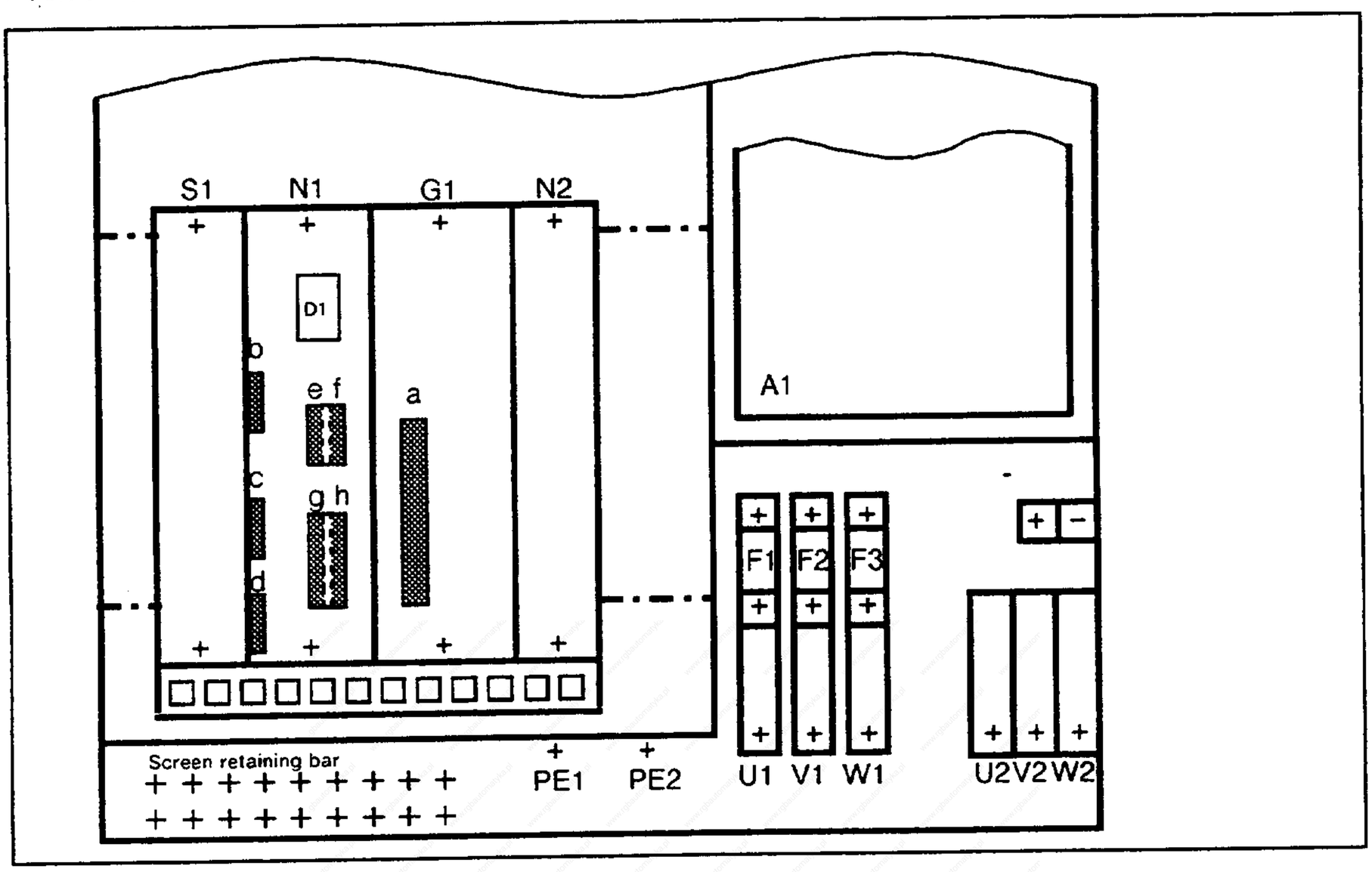

Position of the connectors. 6SC6608 transistor PWM converter

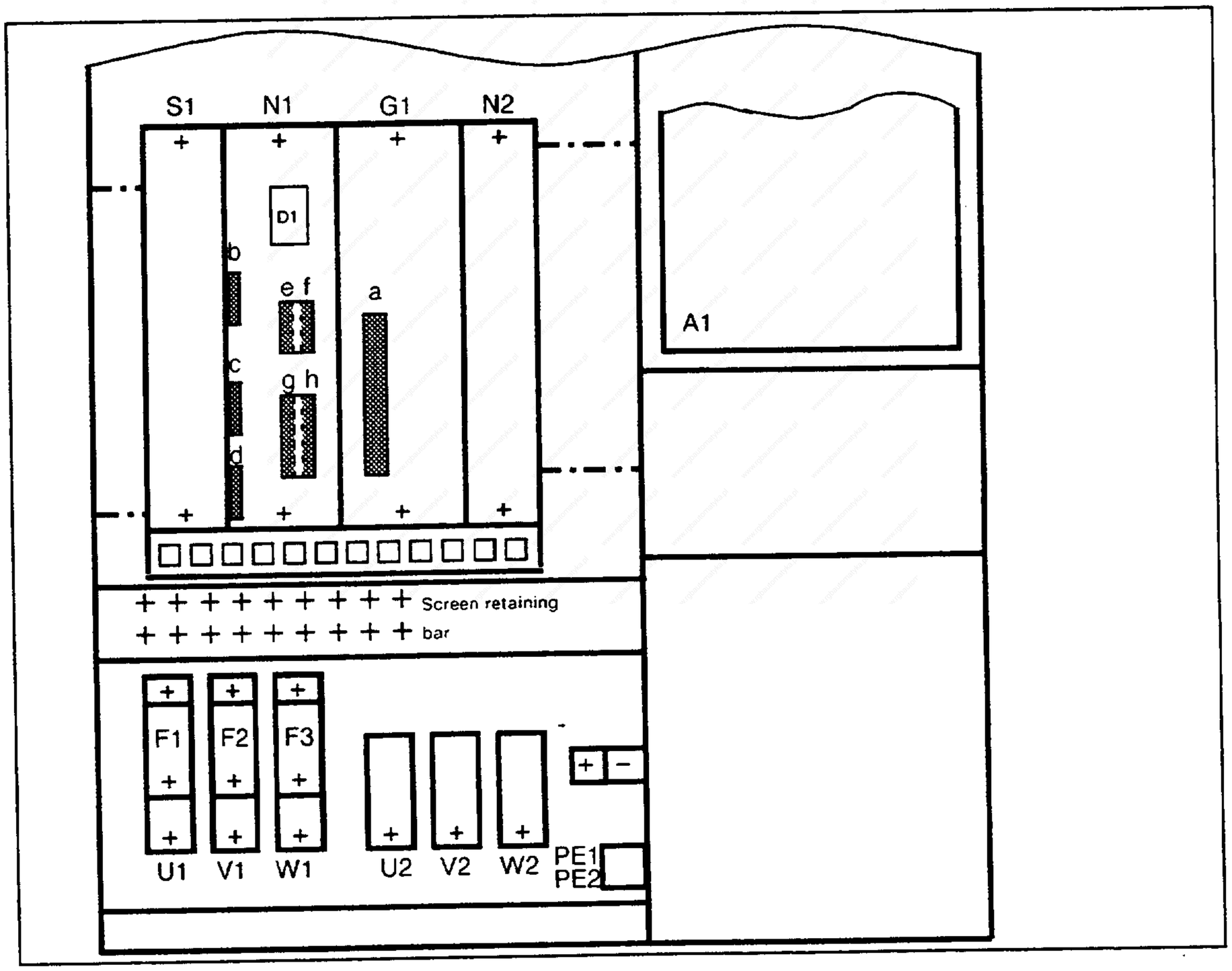

Position of the connectors, 6SC6612 transistor PWM converter

© Siemens AG 1992 All Rights Reserved

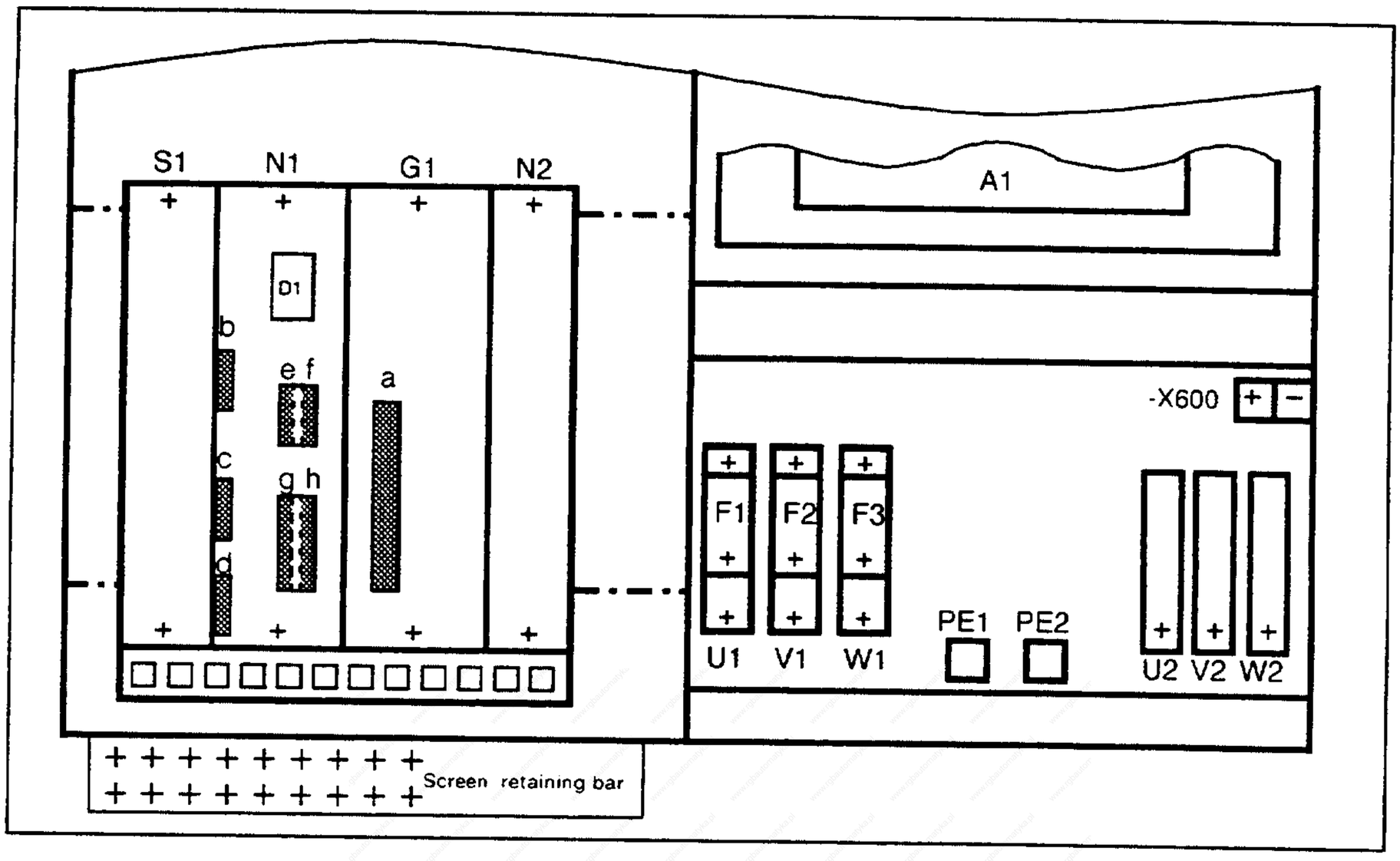

Position of the connectors, 6SC6620 transistor PWM converter

N2 = Infeed/regenerative feedback board

S1 = Option

G1 = Central board
a = X114 = Relay outputs

D1 = Software board

A1 = Gating board/power section

N1 = Control board
b = X112 = Serial interface
c = X113 = Motor encoder output
d = X114 = Motor encoder input
e = X121:A = Speed setpoints
f = X121:B = D/A converter outputs
g = X122:A = Terminals (permanently assigned)
h = X122:B = Terminals (freely-programmable)

© Siemens AG 1992 All Rights Reserved

4.1.5 Recommended connection

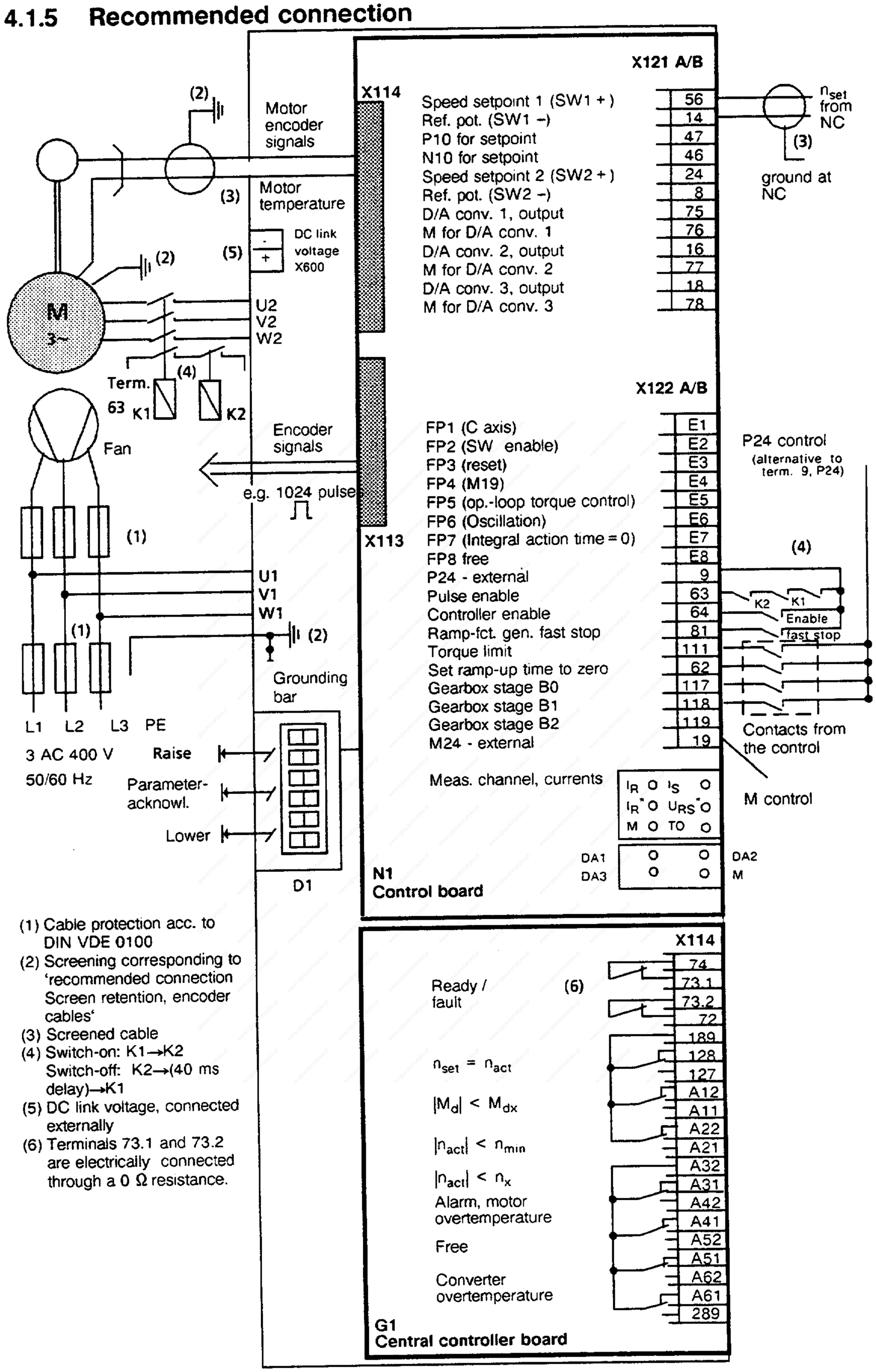

(1) Cable protection acc. to DIN VDE 0100
(2) Screening corresponding to 'recommended connection Screen retention, encoder cables'
(3) Screened cable
(4) Switch-on: K1→K2
Switch-off: K2→(40 ms delay)→K1
(5) DC link voltage, connected externally
(6) Terminals 73.1 and 73.2 are electrically connected through a 0 Ω resistance.

Recommended connection for the SIMODRIVE 660 transistor PWM converter

© Siemens AG 1992 All Rights Reserved

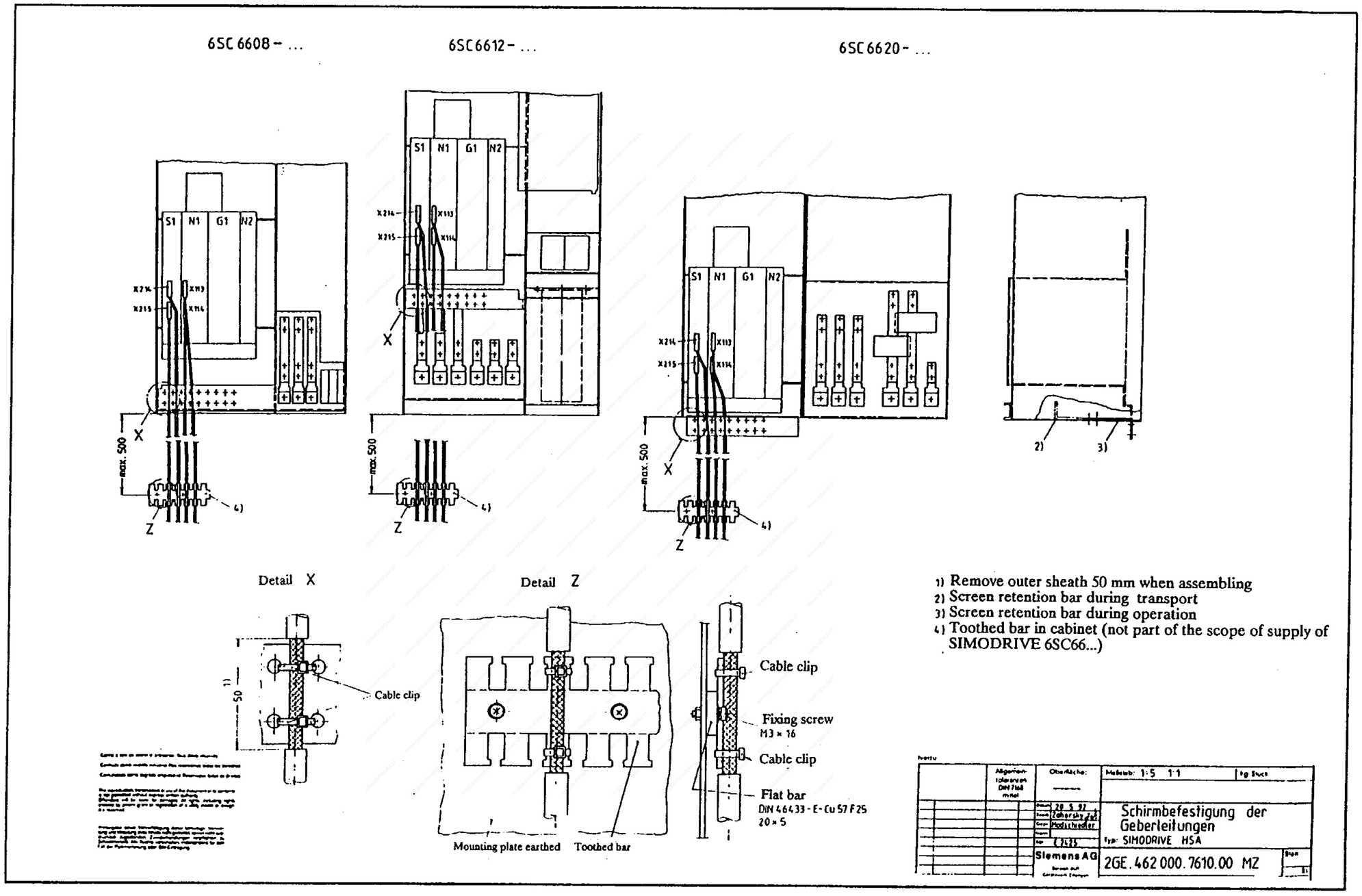

Recommended connection, screen retention for the encoder cables

© Siemens AG 1992 All Rights Reserved

4.2 Cable connections

With the exception of the motor encoder and power cables (individual conductors for cables including ground cable), no other connections are required between the AC motor and PWM converter.

A screened, twisted-pair cable must be used between the pulse encoder and the PWM converter. The temperature sensor signals are also fed through this cable. The maximum pulse encoder cable length is 50 m.

The motor encoder signals can be output from the converter as square-wave signal via the 6FC9 348-2V□ adapter cable for a higher-level closed-loop position control circuit.

Accessory	Length	Order No.
Motor encoder cable, screened, with twisted pairs **without** connectors	(sold by the meter)	6FC9 343-0AV01
Motor encoder cable, screened with twisted pairs **with** connectors	5...50 m	6FC9 348-2V□[1]
15-pin motor encoder plug connector for connecting to the main spindle module	–	6FC9 348-7HG
17-pin motor encoder socket connector for connecting to the AC motor	–	6FC9 348-7HA
Measuring circuit cable for connecting the HS module to the SINUMERIK System 800	5 m 15 m	6FC9 348-2RB 6FC9 348-2RD
Connector for the converter side	–	6FC9 341-1FK
Connector for the NC side (System 800)	–	6FC9 341-1EC
Connecting cable for connecting to the PG 750/PC-AT	5 m 10 m	6FC9 348-2TB 6FC9 348-2TC
Connector for the converter side	–	6FC9 348-7HT
Connector for the programming unit (COM1)	–	6FC9 348-7HS

1) *Cable lengths. B = 5 m C = 10 m D = 15 m E = 18 m H = 20 m F = 25 m J = 30m G = 50 m*

© Siemens AG 1992 All Rights Reserved

Cable designation: Motor encoder cable
Order No.: **6FC9348-2V□**

Main spindle converter
Board N1
Connector X114

1PH4/1PH6
AC motor
(RON 350)

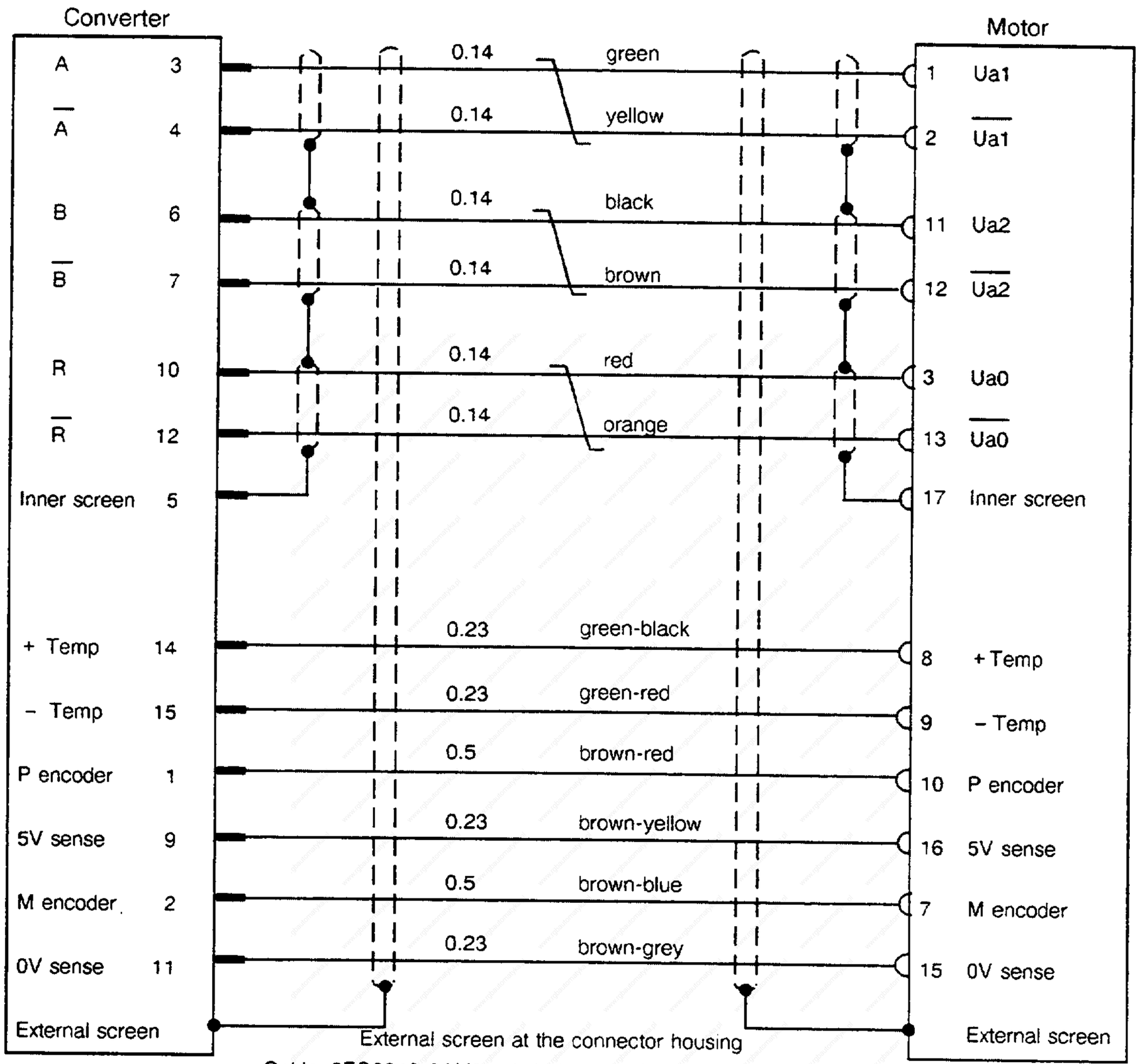

Cable: 6FC9343-0AV01 3x2x0.14 + 4x0.23 + 4x0.14 + 2x0.5

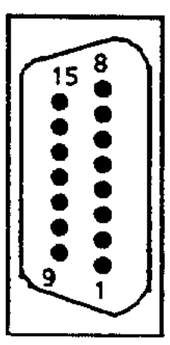

Connector D-Sub SBM 383
15-pin plug connector, crimped
Connecting side
Cable output, below pin 1
6FC9348-7HG

Round connector
Metal housing
17-pin socket
Connecting side
SIEMENS
6FC9348-7HA

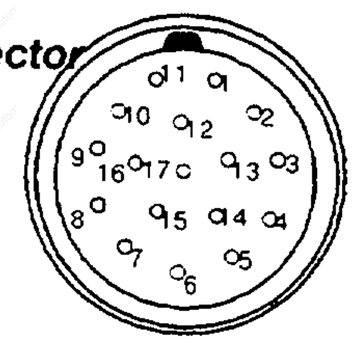

Note: We recommend that pre-assembled cables are used as correct screening is required for an EMC connection

A guarantee for the unit function is only given when original manufacturer's cables are used.

© Siemens AG 1992 All Rights Reserved

Cable designation: HSM-NC measuring circuit cable (System 800)
Order No.: **6FC9348-2R□**

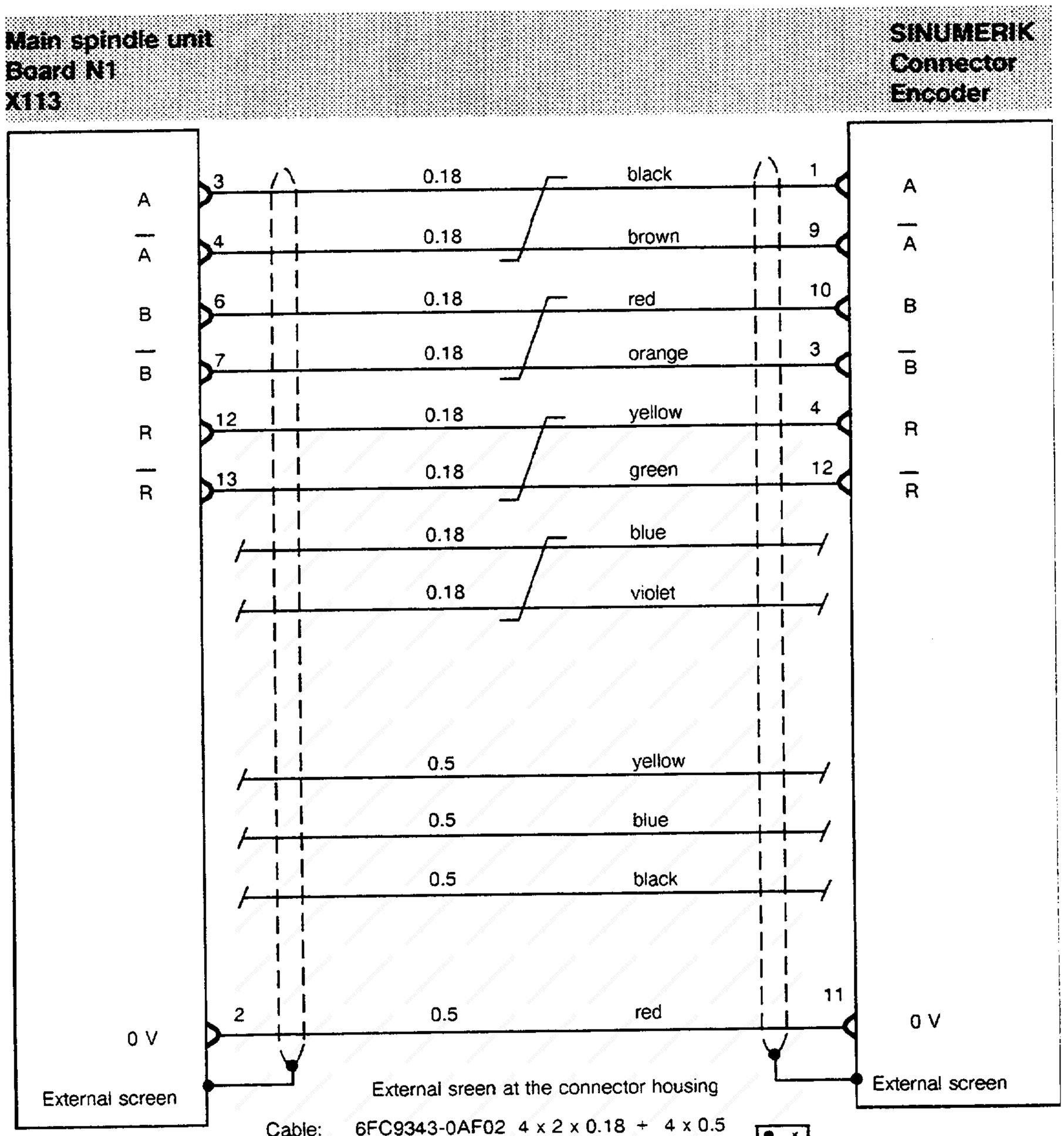

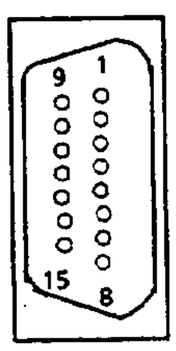

Connector
D-Sub
15-pin socket connector, c rimped
Connecting side
Cable outlet, below
pin 1, above
6FC9341-1FK

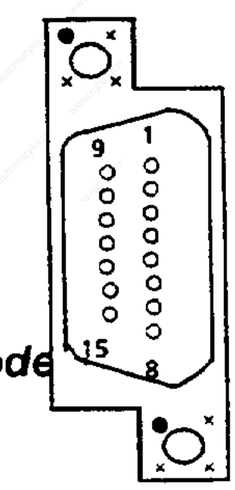

Connector
D-Sub
15-pin socket
connector,
crimped
Connecting side
Cable outlet
below, pin 1, above
6FC9341-1EC

Connector code
• Coding pin
× No coding pin

© Siemens AG 1992 All Rights Reserved

Cable designation: Data cable, PG 750/PC-AT
Order No.: **6FC9348-2T□**

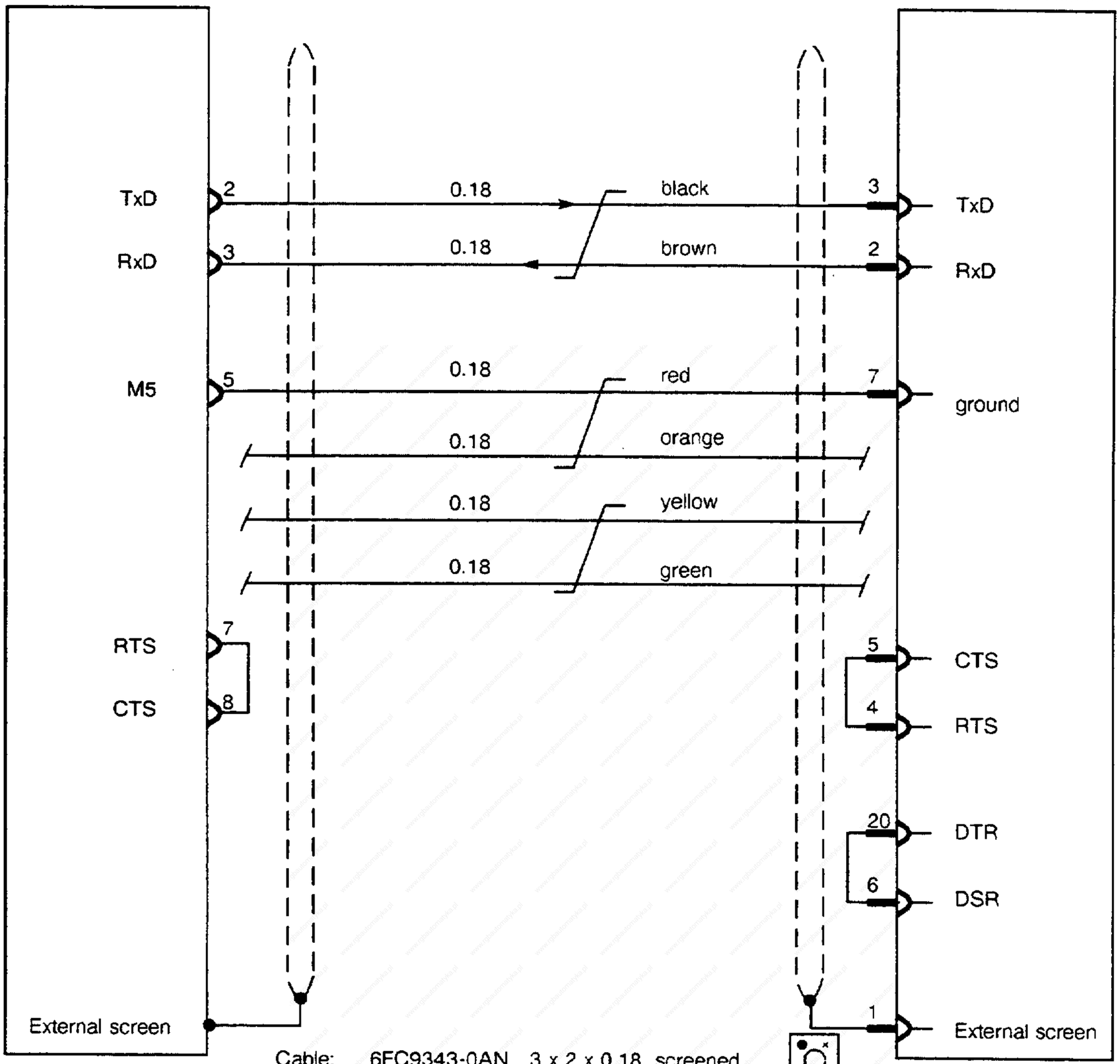

Cable: 6FC9343-0AN 3 x 2 x 0.18, screened

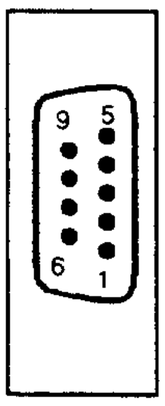

Connector
D-Sub.
9-pin plug connector, crimped
Connecting side
Cable outlet below,
pin 1, below
6FC9348-7HT

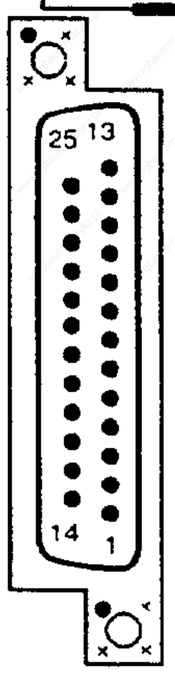

Connector
D-Sub,
25-pin plug
connector, crimped
Connecting side
Cable outlet below
pin 1 below
6FC9348-7HS

Connector code

- ● Coding pin
- × No coding pin

© Siemens AG 1992 All Rights Reserved

5 Appendix

5.1 Dimension drawings, PWM converters

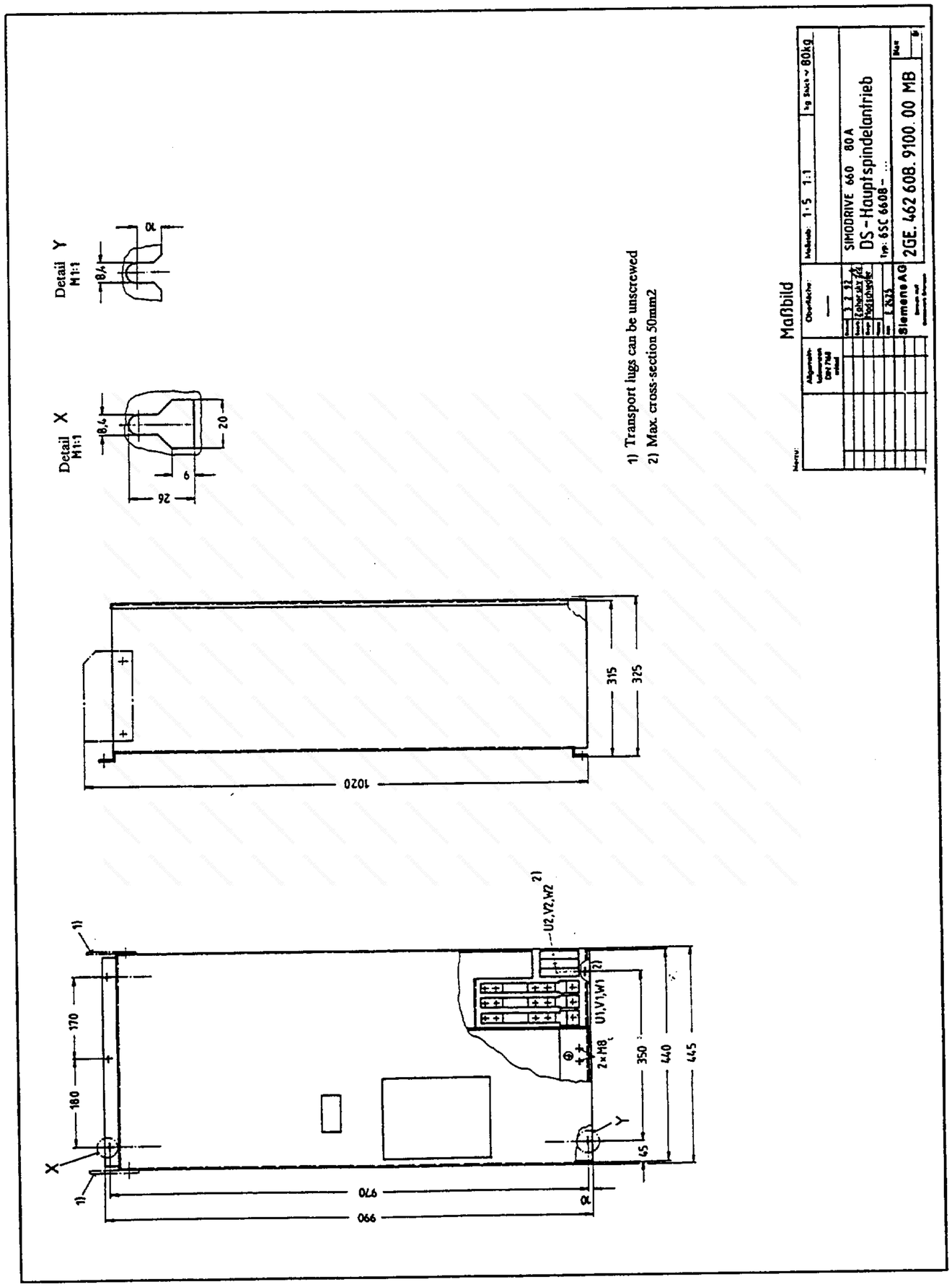

Dimension drawing. 6SC6608 PWM converter (dimensions in mm. not to scale)

© Siemens AG 1992 All Rights Reserved

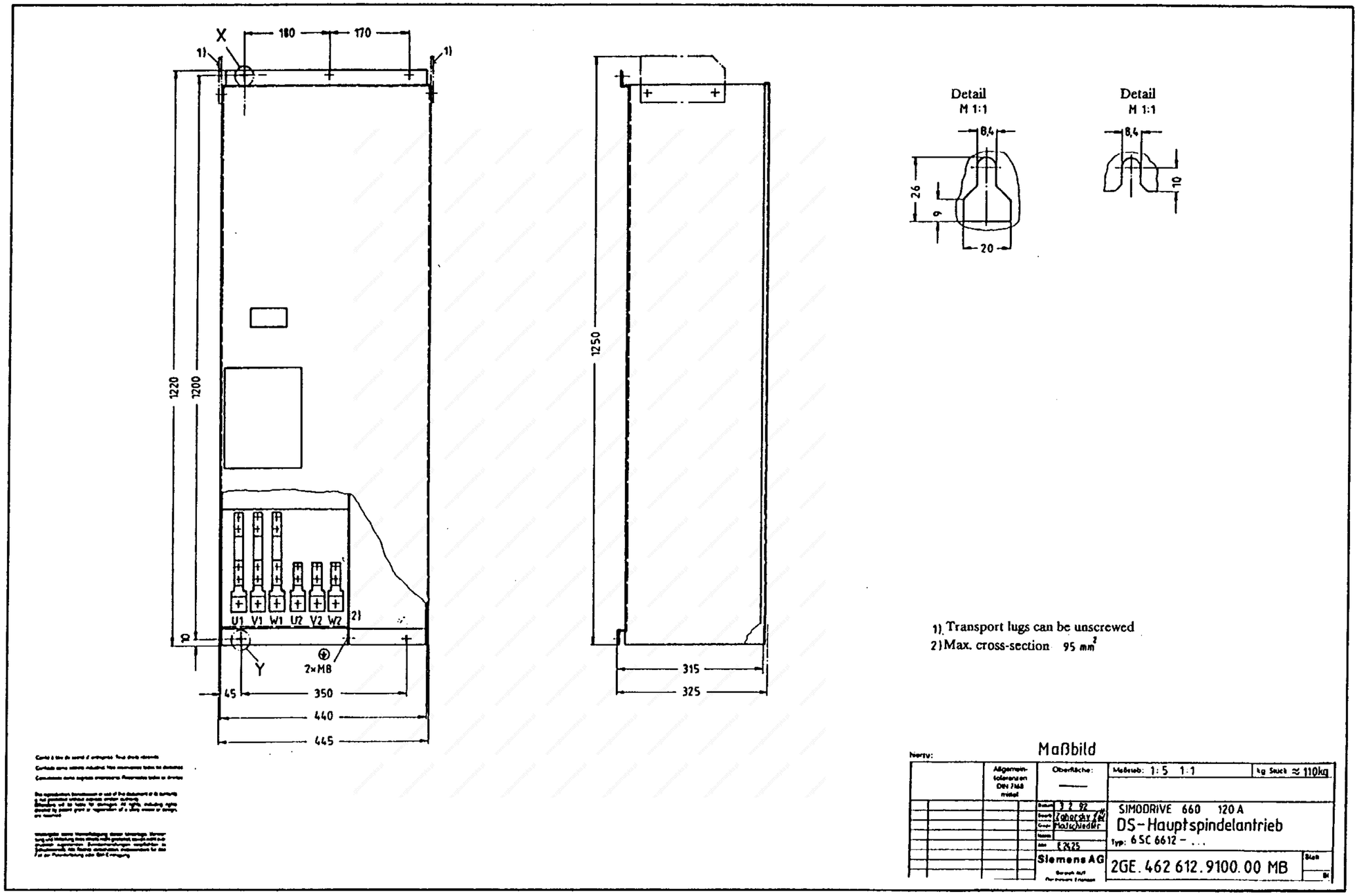

Dimension drawing. 6SC6612 PWM converter (dimensions in mm, not to scale)

© Siemens AG 1992 All Rights Reserved

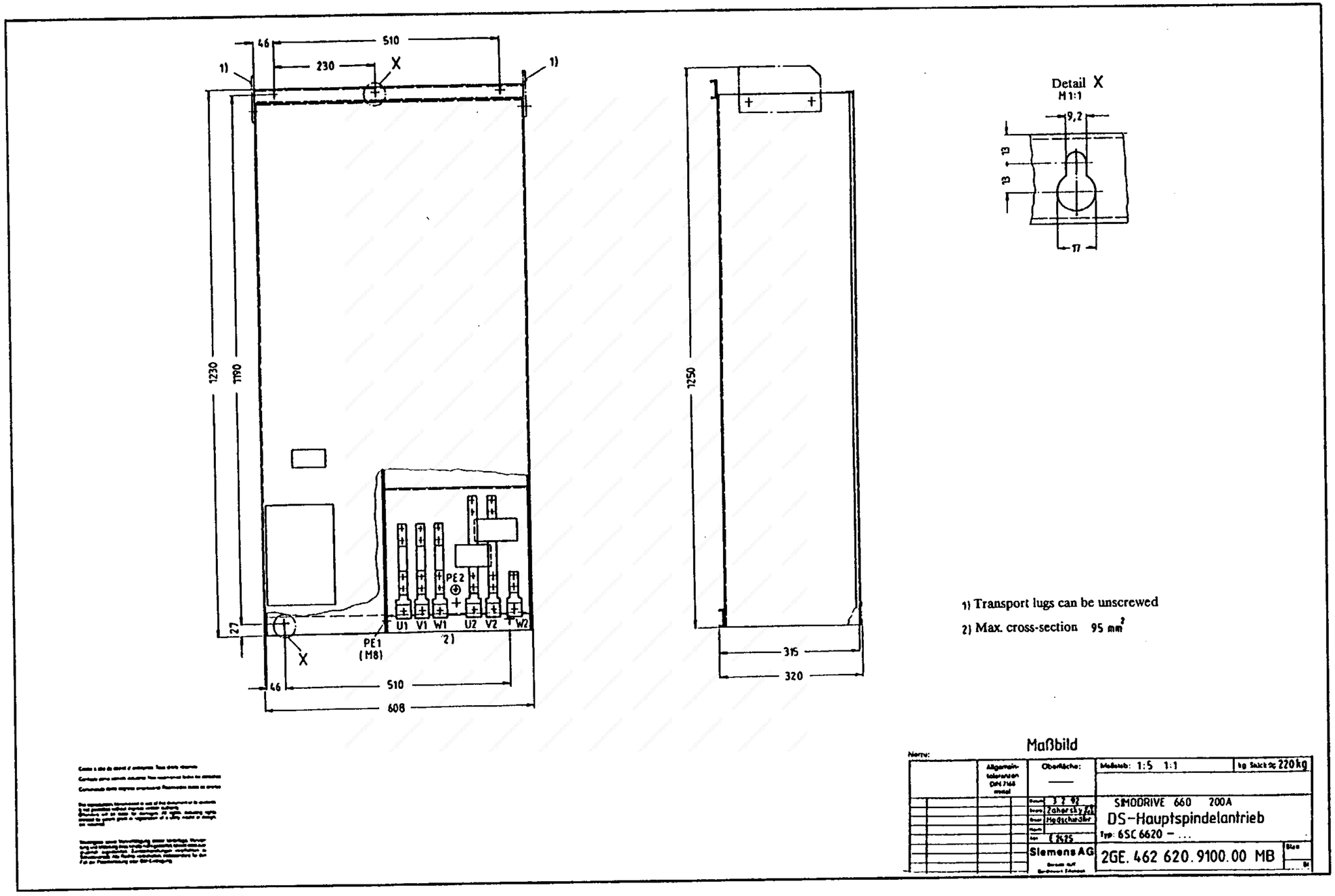

Dimension drawing, 6SC6620 PWM converter (dimensions in mm, not to scale)

© Siemens AG 1992 All Rights Reserved

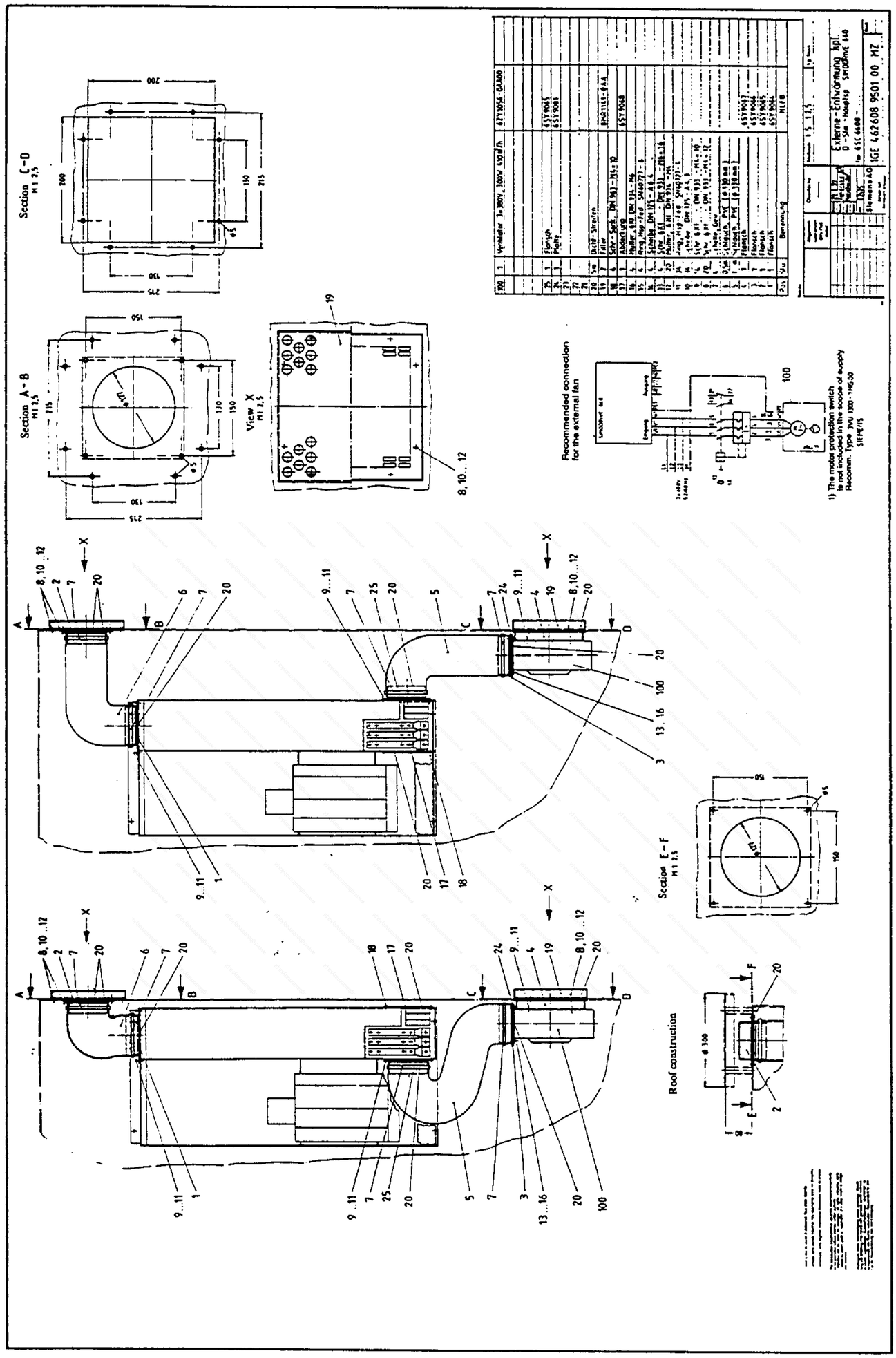

Dimension drawing, 'external heat dissipation' option (6SC6608)

© Siemens AG 1992 All Rights Reserved

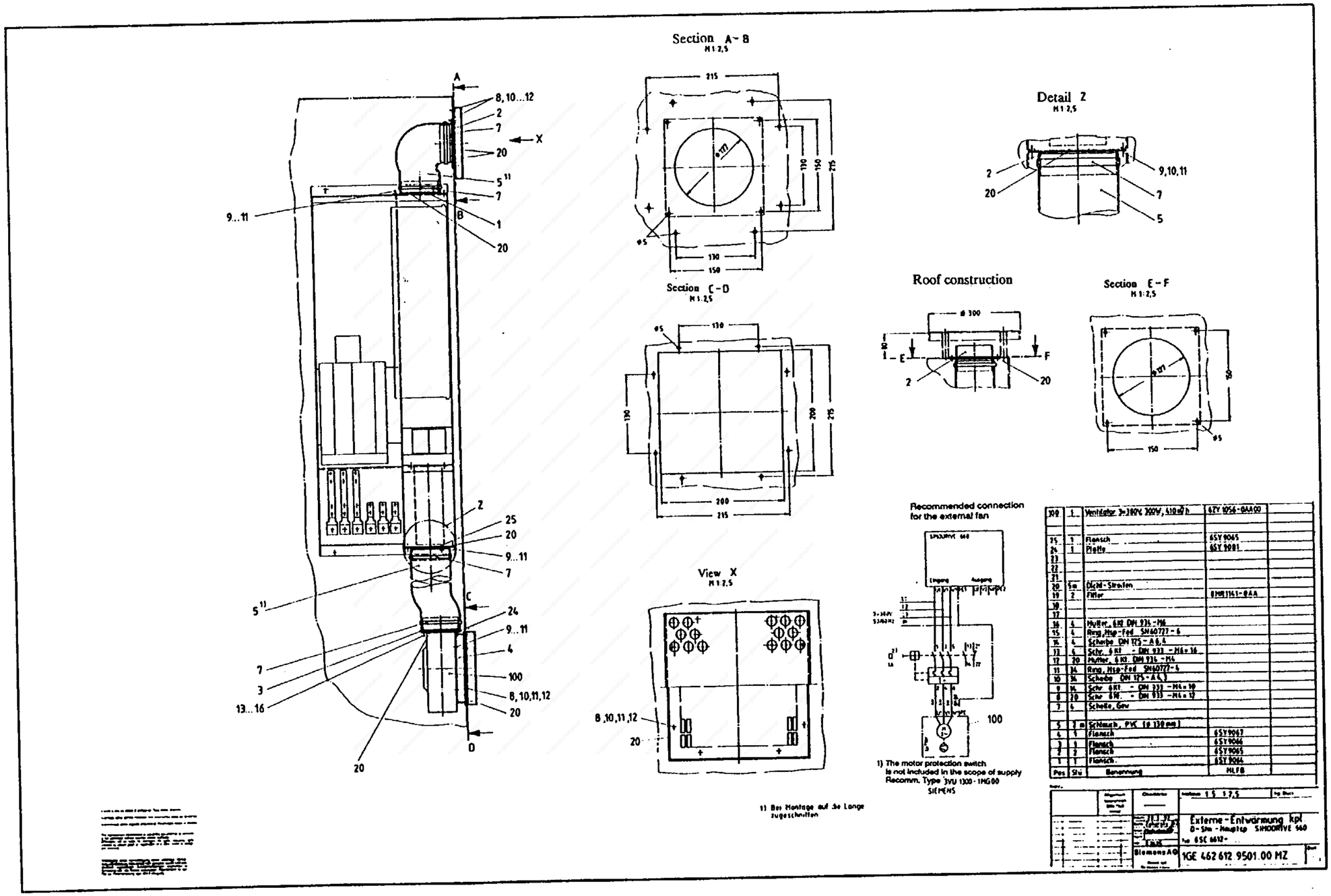

Dimension drawing, 'external heat dissipation' option (6SC6612)

© Siemens AG 1992 All Rights Reserved

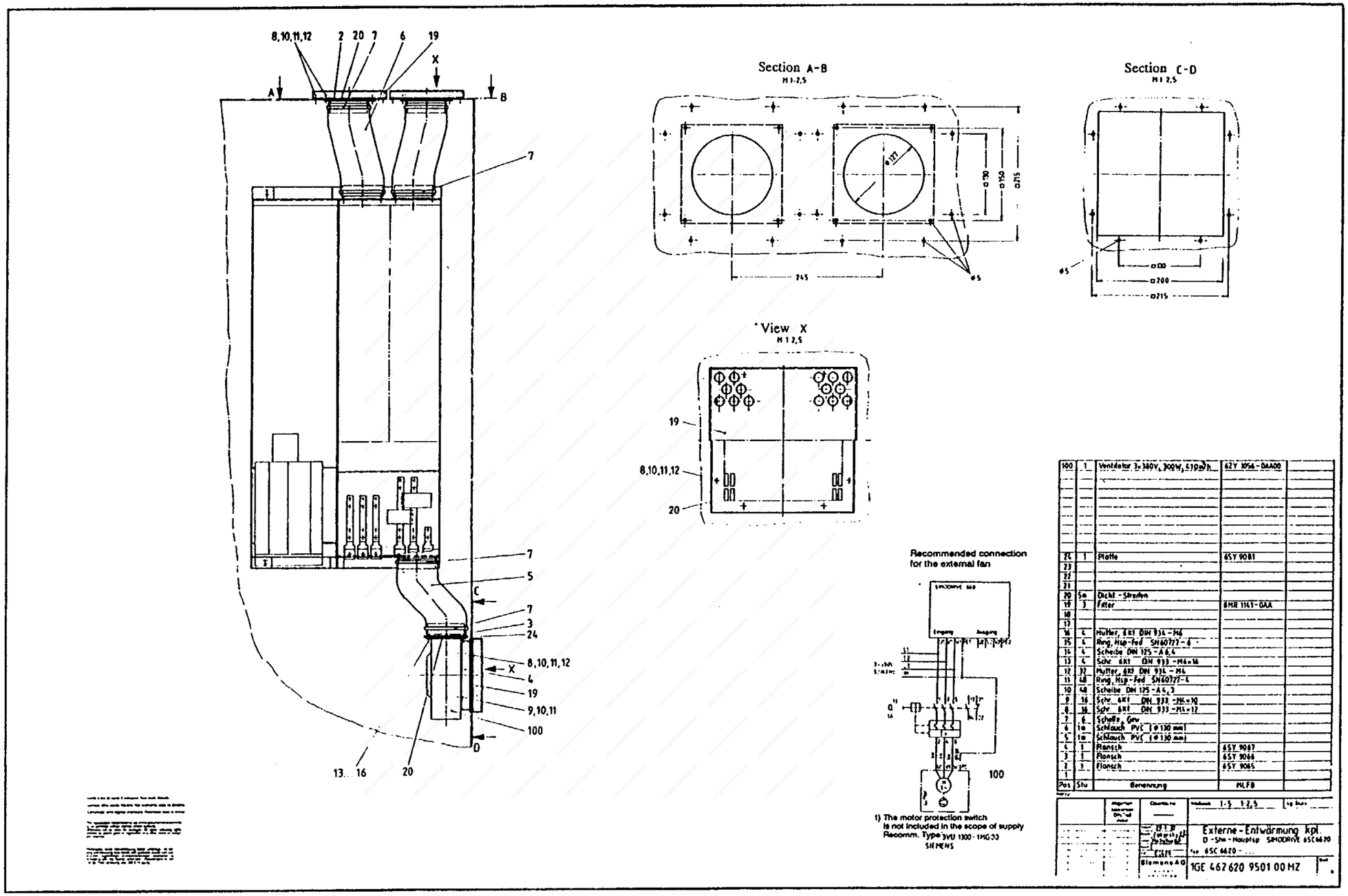

Dimension drawing, 'external heat dissipation' option (6SC6620)

© Siemens AG 1992 All Rights Reserved

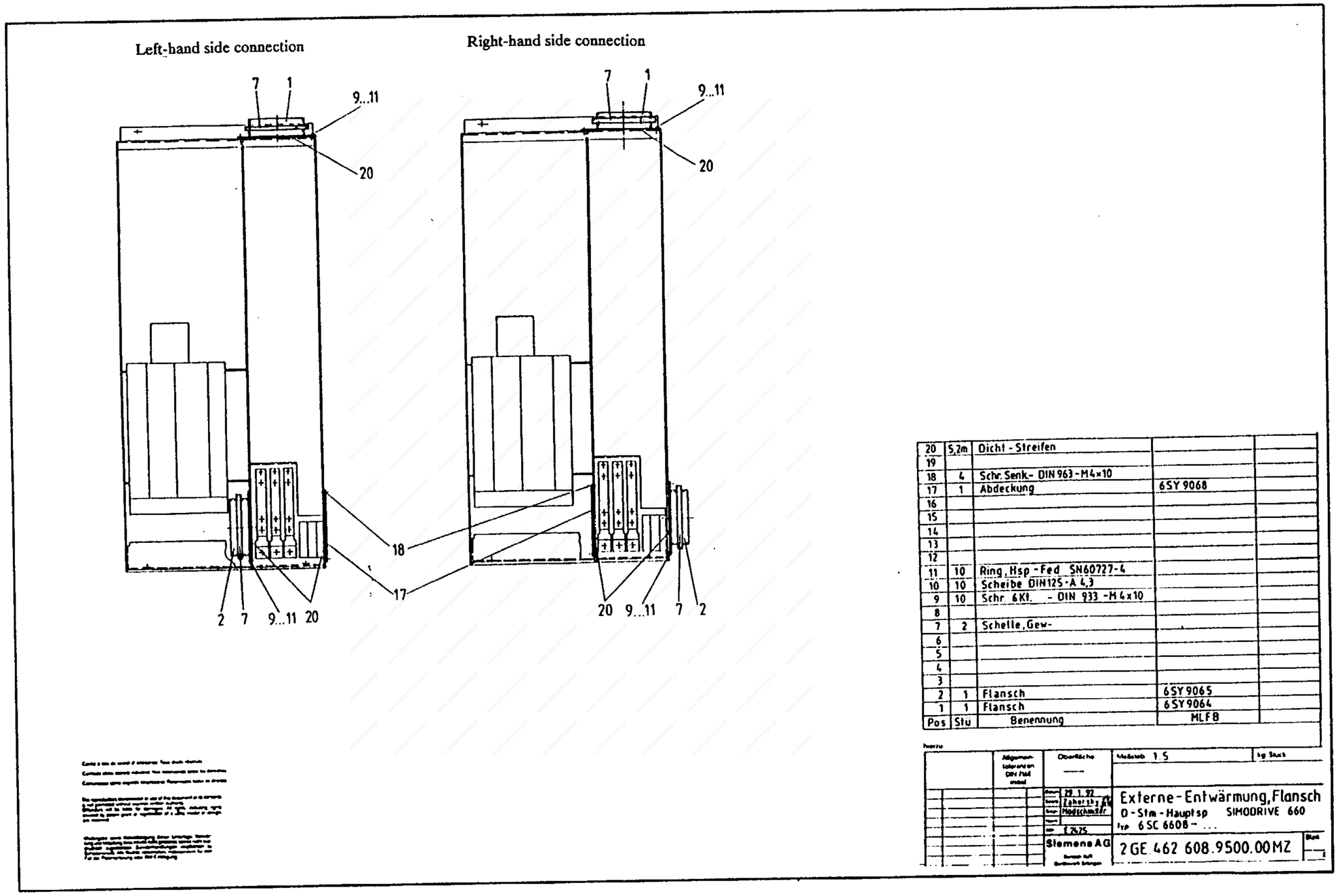

Pos	Stü	Benennung	MLFB	
20	5,2m	Dicht - Streifen		
19				
18	4	Schr. Senk- DIN 963 - M4x10		
17	1	Abdeckung	6SY 9068	
16				
15				
14				
13				
12				
11	10	Ring, Hsp - Fed SN60727-4		
10	10	Scheibe DIN125-A 4,3		
9	10	Schr. 6Kt. - DIN 933 - M4x10		
8				
7	2	Schelle, Gew-		
6				
5				
4				
3				
2	1	Flansch	6SY 9065	
1	1	Flansch	6SY 9064	

Allgemeintoleranzen DIN 7168 mittel

Oberfläche

Maßstab 1:5

kg Stück

29.1.92 Zahorsky

Modschmidt

E 2425

Siemens AG

Externe-Entwärmung, Flansch

D-Stm-Hauptsp SIMODRIVE 660

Typ 6SC 6608- ...

2GE 462 608.9500.00MZ

Blatt 1

Dimension drawing, external heat dissipation, connecting flange option (6SC6608)

© Siemens AG 1992 All Rights Reserved

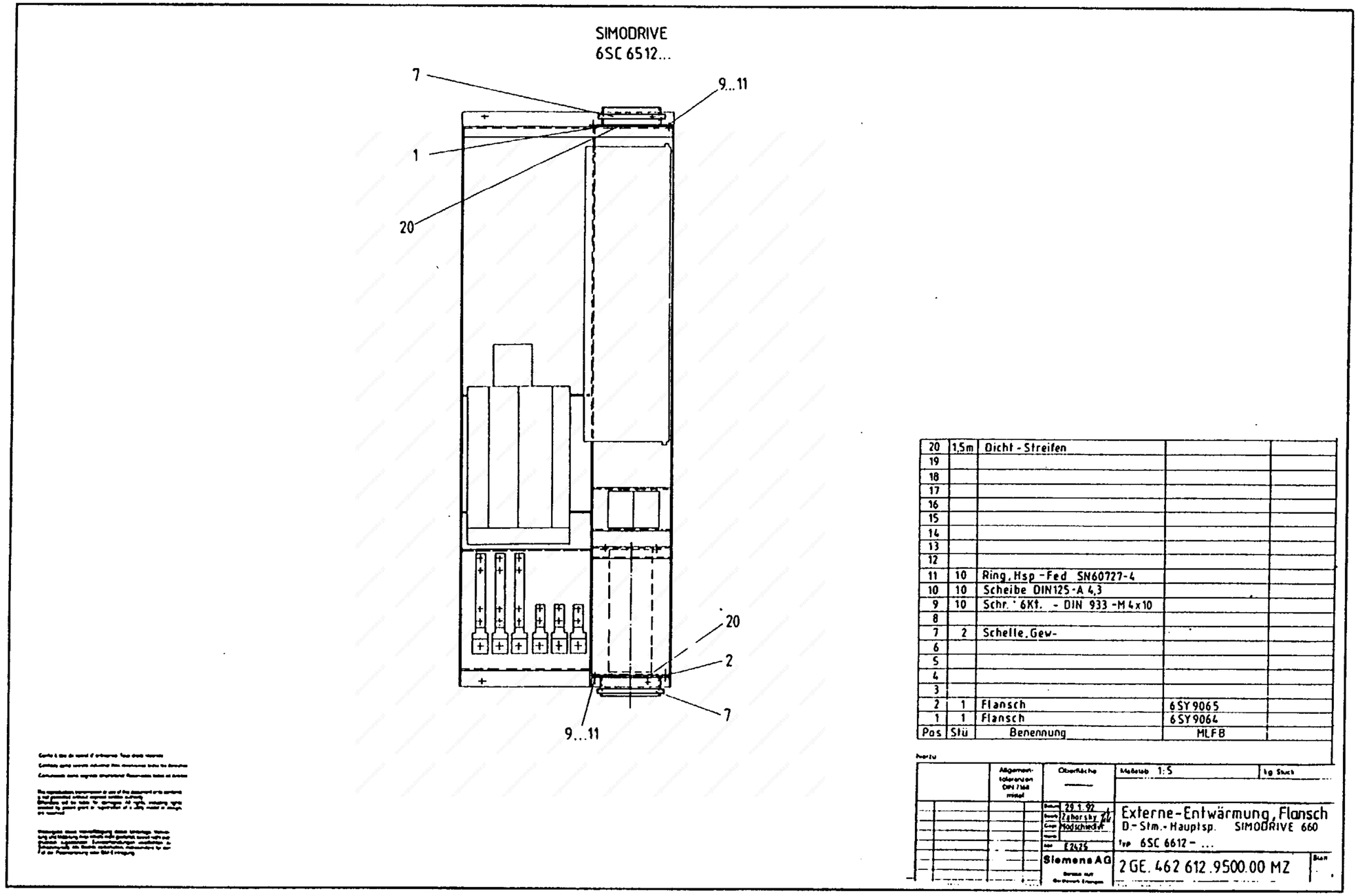

Dimension drawing 'external heat dissipation, connecting flange' option (6SC6612)

© Siemens AG 1992 All Rights Reserved

5.2 Dimension drawing, autotransformer

Autotransformer		b1 max	b2 max.	d1	d2	e1 max.	h1 max	i1	i2 max.	i3	n1	n2
Type	Core section											
4AU39	**3UI 210/70**	174	-	12	18	127	370	366	420	410	316	141
4BU43	**3UI 240/80**	194	-	15	22	132	420	416	480	460	356	155
4BU45	**3UI 240/107**	221	-	15	22	146	420	416	480	460	356	182
4BU47	**3UI 240/137**	251	-	15	22	161	420	416	480	460	356	212
4BU53	**3UI 265/135 S**	235	195	12,.5	12.5	183	515	470	555	-	410	198

Autotransformers

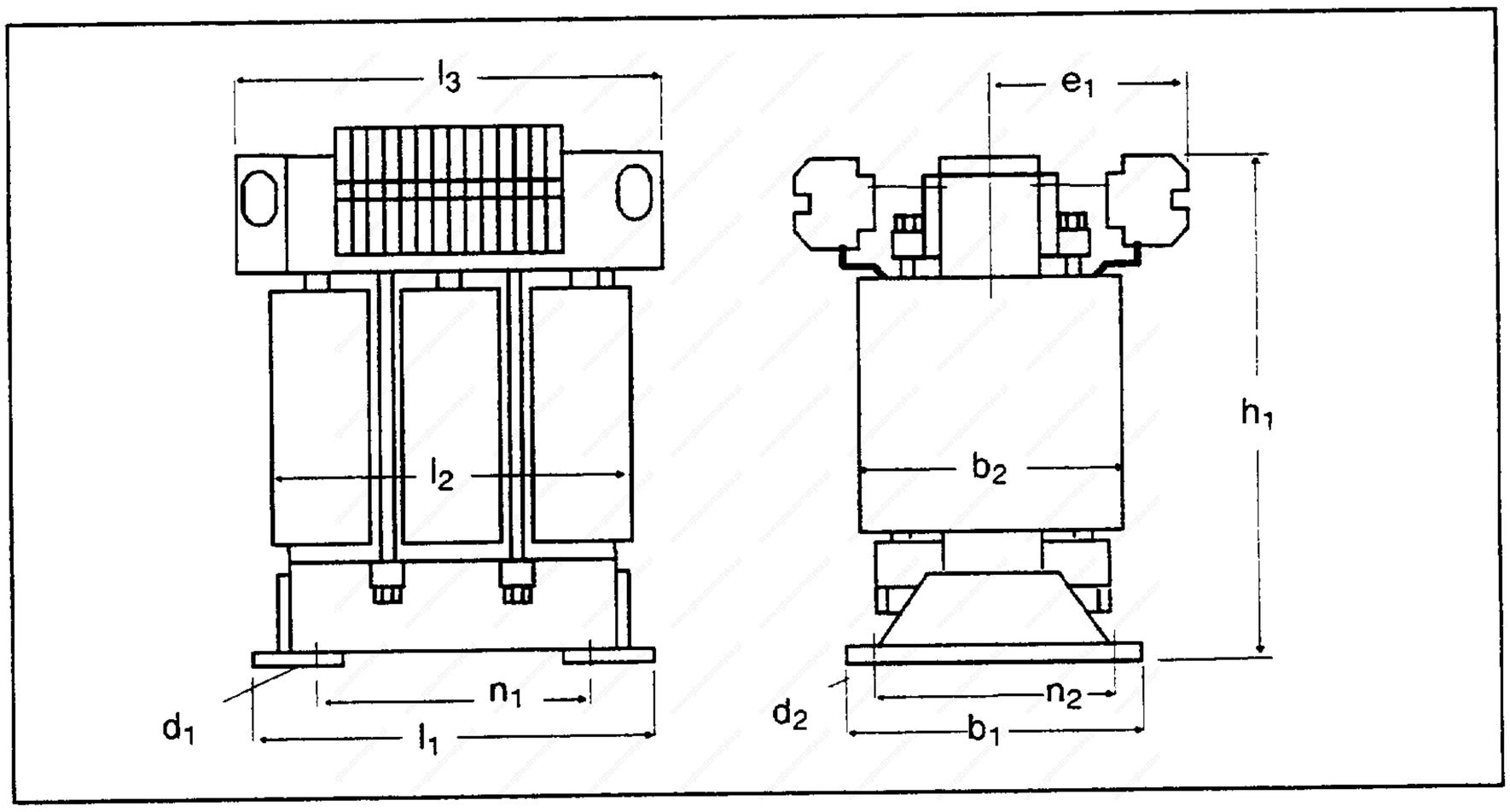

An

Siemens AG

AUT V 250
P.O. Box 4848

W-8500 Nuremberg 1
GERMANY

Suggestions

Corrections

For Publication/Manual:

SIMODRIVE 660
TransistorPWM Converters for AC Main Spindle Drives

From

Name

Company/Dept.

Address:

Telephone: /

Description

Order No..: 6ZB5 420-0AQ02-0BA0
Edition: 10.92

Should you come across any printing errors when reading this publication, please notify us on this sheet. Suggestions for improvement are also welcome.

Suggestions and/or corrections

Siemens AG
Automation Group
Automation Systems
for Machine Tools, Robots
and Special-Purpose Machines
P.O. Box 48 48, W-8500 Nuremberg 1
Federal Republic of Germany

© Siemens AG 1992 All Rights Reserved
Subject to change without prior notice

Siemens Aktiengesellschaft

Order No.: 6ZB5 420-0AQ02-0BA0
Printed in the Fed. Rep. of Germany
252/07796 BS 02930.3

Progress
in Automation.
Siemens