15N50

Power MOSFET

15A, 500V N-CHANNEL POWER MOSFET

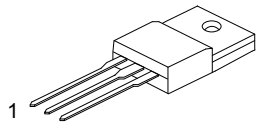

TO-220F1

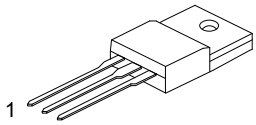

TO-220F2

■ DESCRIPTION

The UTC **15N50** is an N-channel mode power MOSFET using UTC's advanced technology to provide customers with planar stripe and DMOS technology. This technology allows a minimum on-state resistance and superior switching performance. It also can withstand high energy pulse in the avalanche and commutation mode.

The UTC **15N50** is generally applied in high efficiency switch mode power supplies.

■ FEATURES

* $R_{DS(ON)}$<0.35Ω @ V_{GS}=10V
* High Switching Speed

■ SYMBOL

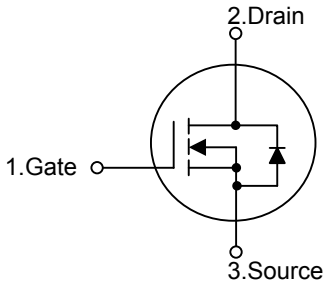

■ ORDERING INFORMATION

Ordering Number		Package	Pin Assignment			Packing
Lead Free	Halogen Free		1	2	3	
15N50L-TF1-T	15N50G-TF1-T	TO-220F1	G	D	S	Tube
15N50L-TF2-T	15N50G-TF2-T	TO-220F2	G	D	S	Tube

Note: Pin Assignment: G: Gate D: Drain S: Source

15N50L-TF1-T (1)Packing Type (2)Package Type (3)Lead Free	(1) T: Tube (2) TF1: TO-220F1, TF2: TO-220F2 (3) L: Lead Free, G: Halogen Free

■ MARKING INFORMATION

PACKAGE	MARKING
TO-220F1 TO-220F2	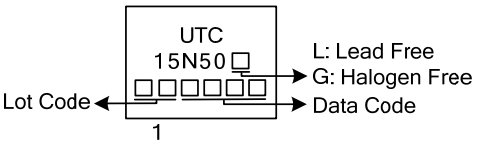

■ ABSOLUTE MAXIMUM RATINGS (T_C=25°C, unless otherwise specified.) (Note 5)

PARAMETER			SYMBOL	RATINGS	UNIT
Drain to Source Voltage			V_{DSS}	500	V
Gate-Source Voltage			V_{GSS}	±30	V
Drain Current	Continuous	T_C=25°C	I_D	15	A
		T_C=100°C		9	A
	Pulsed (Note 2)		I_{DM}	60	A
Avalanche Current (Note 2)			I_{AR}	15	A
Avalanche Energy	Single Pulsed (Note 3)		E_{AS}	731	mJ
	Repetitive (Note 2)		E_{AR}	17	mJ
Peak Diode Recovery dv/dt (Note 4)			dv/dt	15	V/ns
Power Dissipation (T_C=25°C)		TO-220F1	P_D	48	W
		TO-220F2		52	
Derate above 25°C		TO-220F1		0.384	W/°C
		TO-220F2		0.416	
Junction Temperature			T_J	+150	°C
Storage Temperature			T_{STG}	-55~+150	°C

Notes: 1. Absolute maximum ratings are those values beyond which the device could be permanently damaged. Absolute maximum ratings are stress ratings only and functional device operation is not implied.
2. Repetitive Rating; Pulse width limited by maximum junction temperature.
3. L=6.5mH, I_{AS}=15A. V_{DD}=50V, R_G=25Ω, Starting T_J=25°C
4. I_{SD}≤15A, di/dt≤200A/μs, V_{DD}≤BV_{DSS}, Starting T_J=25°C
5. Drain current limited by maximum junction temperature

■ THERMAL DATA

PARAMETER		SYMBOL	RATINGS	UNIT
Junction to Ambient		θ_{JA}	62.5	°C/W
Junction to Case	TO-220F1	θ_{JC}	2.6	°C/W
	TO-220F2		2.4	

■ ELECTRICAL CHARACTERISTICS

PARAMETER		SYMBOL	TEST CONDITIONS	MIN	TYP	MAX	UNIT
OFF CHARACTERISTICS							
Drain-Source Breakdown Voltage		BV_{DSS}	I_D=250μA, V_{GS}=0V, T_J=25°C	500			V
Breakdown Voltage Temperature Coefficient		$\Delta BV_{DSS}/\Delta T_J$	Reference to 25°C, I_D=250μA		0.5		V/°C
Drain-Source Leakage Current		I_{DSS}	V_{DS}=500V, V_{GS}=0V,			1	μA
			V_{DS}=320V, T_C=125°C			10	μA
Gate- Source Leakage Current	Forward	I_{GSS}	V_{GS}=+30V, V_{DS}=0V			+100	nA
	Reverse		V_{GS}=-30V , V_{DS}=0V			-100	nA
ON CHARACTERISTICS							
Gate Threshold Voltage		$V_{GS(TH)}$	V_{GS}=V_{DS}, I_D=250μA	2.0		4.0	V
Static Drain-Source On-State Resistance		$R_{DS(ON)}$	V_{GS}=10V, I_D=7.5A		0.3	0.35	Ω
DYNAMIC PARAMETERS							
Input Capacitance		C_{ISS}	V_{DS}=25V, V_{GS}=0V, f=1.0MHz		2300	2600	pF
Output Capacitance		C_{OSS}			250	270	pF
Reverse Transfer Capacitance		C_{RSS}			26	30	pF
SWITCHING PARAMETERS							
Total Gate Charge		Q_G	V_{DS}=320V, V_{GS}=10V, I_D=15A (Note 1, 2)		210	240	nC
Gate to Source Charge		Q_{GS}			35		nC
Gate to Drain ("Miller") Charge		Q_{GD}			60		nC
Turn-ON Delay Time		$t_{D(ON)}$	V_{DD}=200V, I_D=15A, R_G=25Ω (Note 1, 2)		100	120	ns
Rise Time		t_R			150	170	ns
Turn-OFF Delay Time		$t_{D(OFF)}$			460	500	ns
Fall-Time		t_F			180	210	ns
SOURCE- DRAIN DIODE RATINGS AND CHARACTERISTICS							
Maximum Body-Diode Continuous Current		I_S				15	A
Maximum Body-Diode Pulsed Current		I_{SM}				60	A
Drain-Source Diode Forward Voltage		V_{SD}	I_{SD}=15A, V_{GS}=0V			1.4	V
Body Diode Reverse Recovery Time		t_{rr}	I_{SD}=15A, V_{GS}=0V, dI_F/dt=100A/μs (Note 1)		333		ns
Body Diode Reverse Recovery Charge		Q_{RR}			3.24		μC

Notes: 1. Pulse Test: Pulse width≤300μs; Duty Cycle≤2%.
2. Essentially Independent of Operating Temperature Typical Characteristics

■ TEST CIRCUITS AND WAVEFORMS

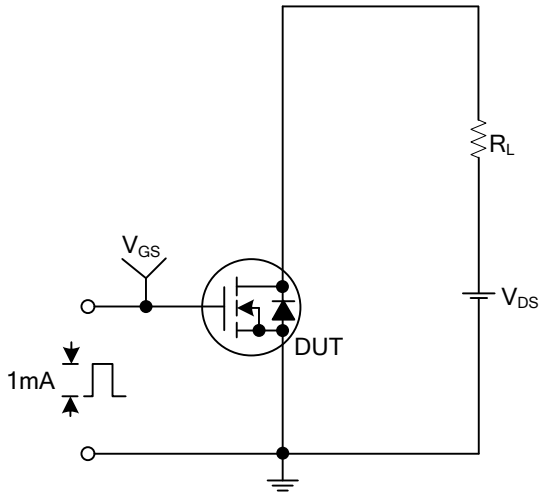

Gate Charge Test Circuit

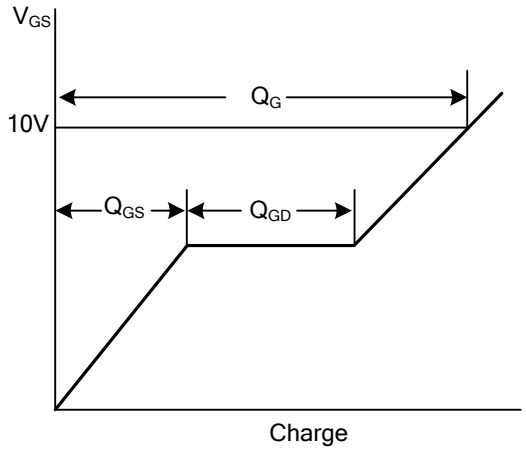

Gate Charge Waveforms

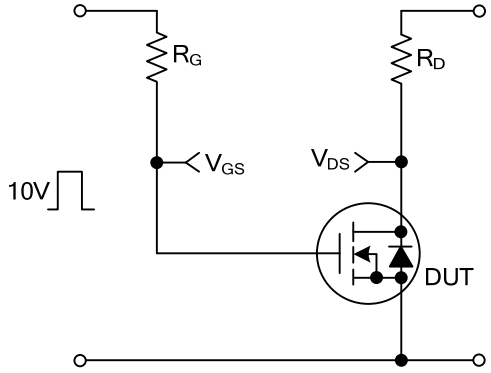

Resistive Switching Test Circuit

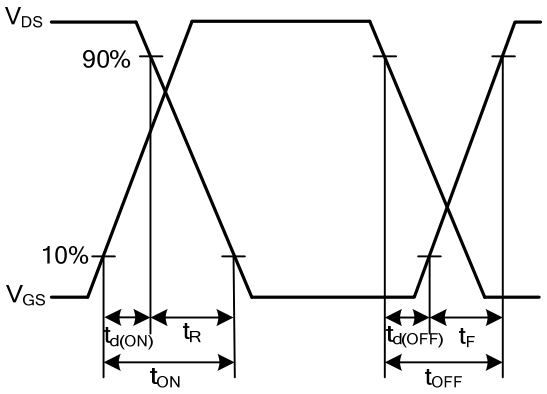

Resistive Switching Waveforms

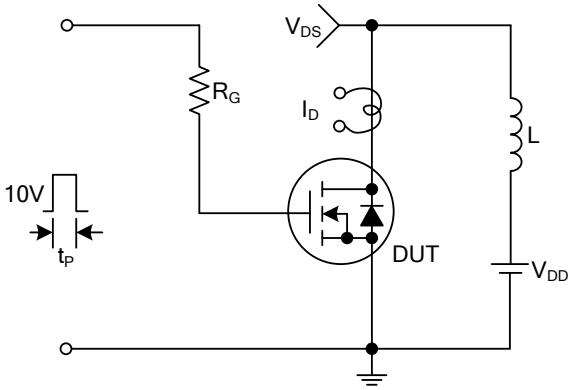

Unclamped Inductive Switching Test Circuit

$$E_{AS}=\frac{1}{2}LI_{AS}^2\frac{BV_{DSS}}{BV_{DSS}-V_{DD}}$$

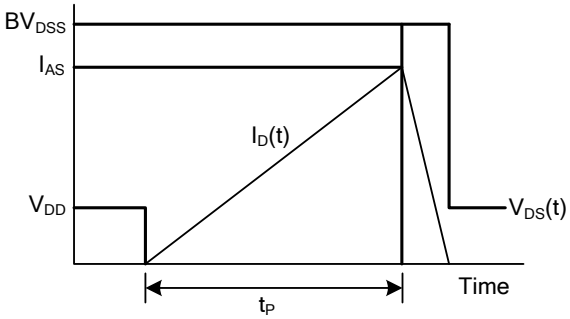

Unclamped Inductive Switching Waveforms

■ TEST CIRCUITS AND WAVEFORMS(Cont.)

Peak Diode Recovery dv/dt Test Circuit & Waveforms

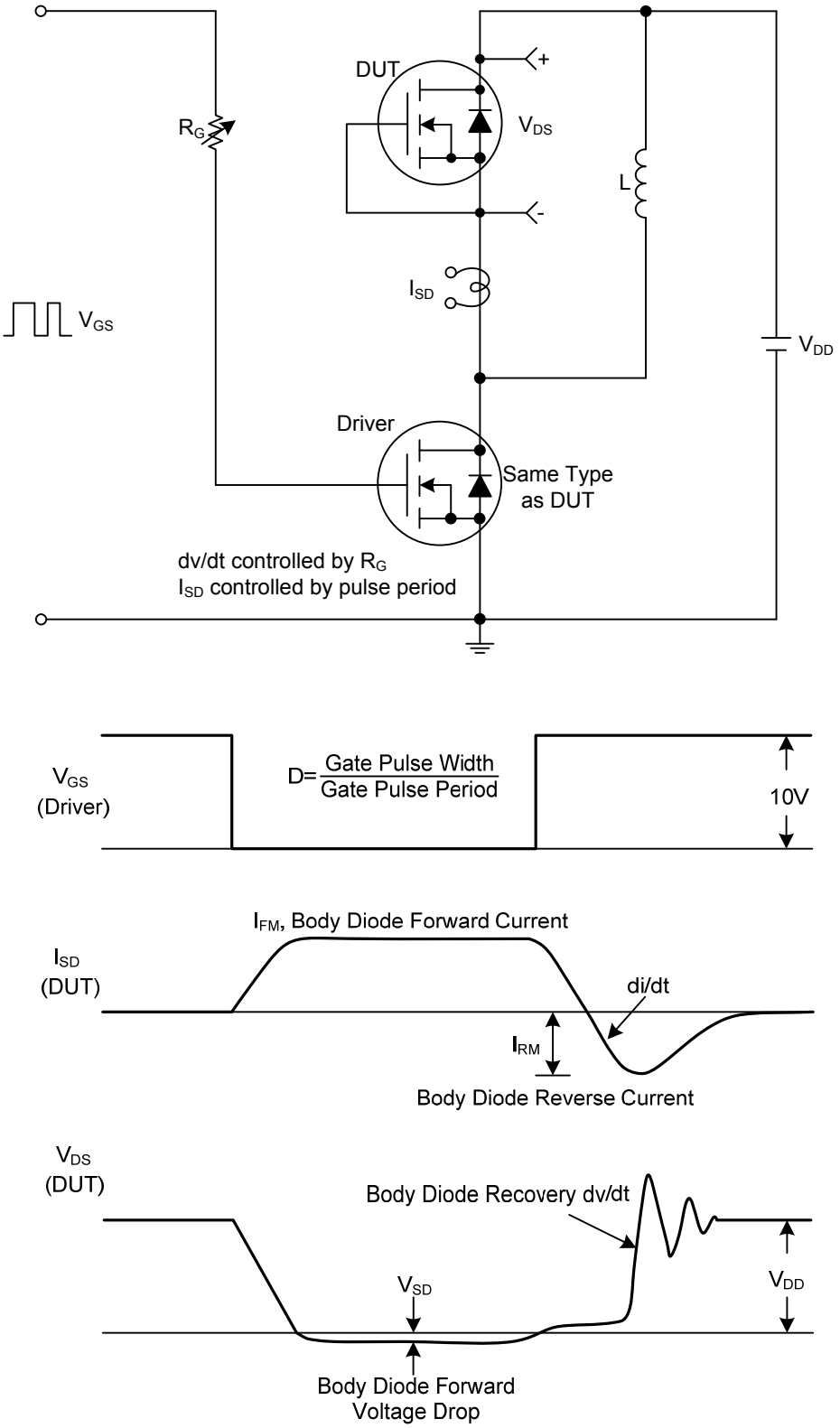

■ TYPICAL CHARACTERISTICS