725 5421

DRAWING No. 010007TD

DO NOT SCALE

THIRD ANGLE PROJECTION

IF IN DOUBT ASK

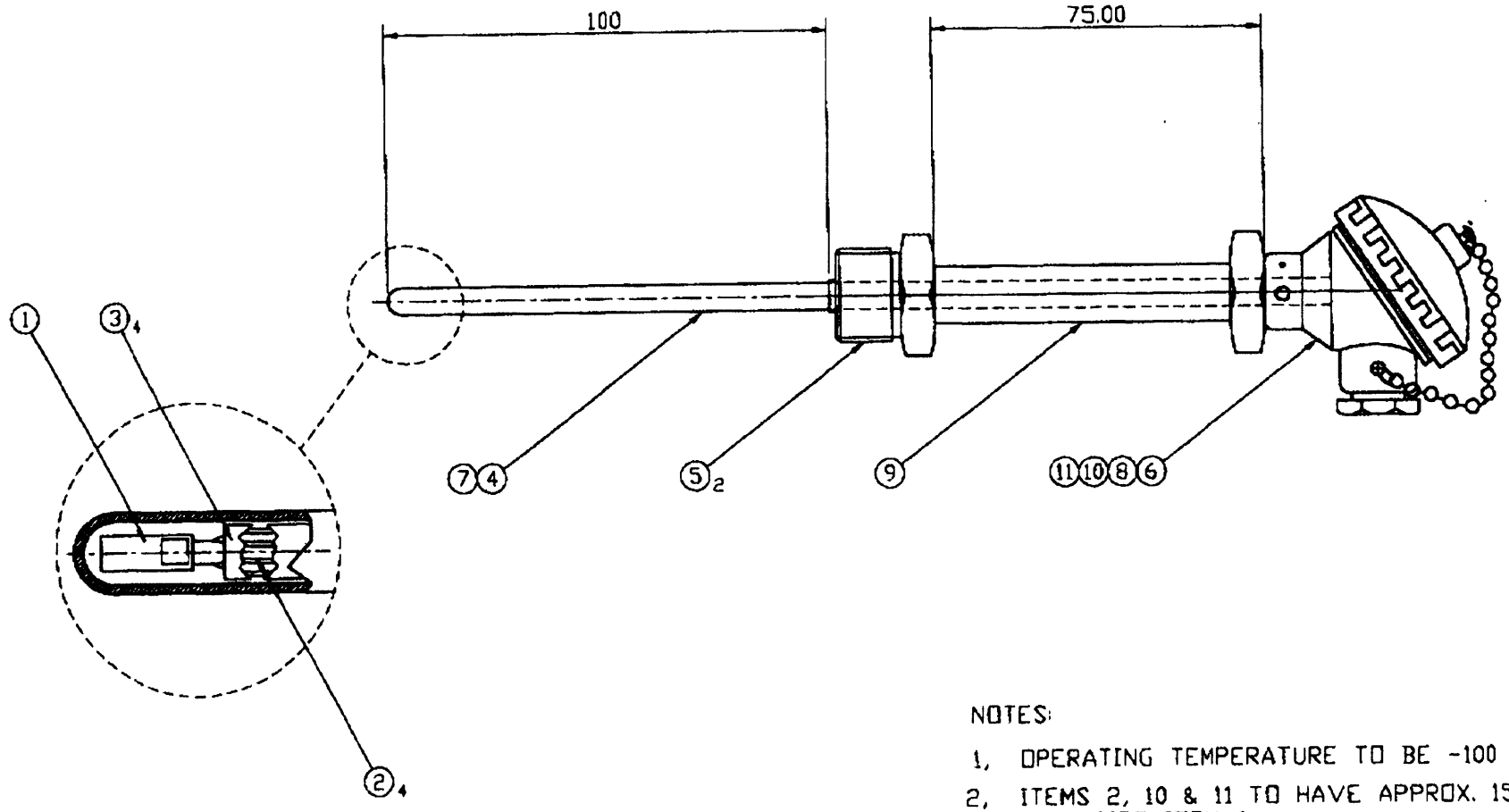

CONTROLLED

NOTES:

1. OPERATING TEMPERATURE TO BE -100 TO +450°C.
2. ITEMS 2, 10 & 11 TO HAVE APPROX. 150mm, COILED UP INSIDE ITEM 6.

ISSUE	REASON FOR CHANGE	DRAWN	APP	DATE
B	REFER TO DCN 0018	J.S.C		19.05.99
A	REFER TO NDR 0008	J.S.C		19.11.98

MATERIAL: N/A

FINISH: N/A

LABFACILITY LIMITED,
99 WALDEGRAVE ROAD,
TEDDINGTON,
MIDDLESEX, TW11 8LR.
TEL 0181 9435331
FAX 0181 9434351

TITLE: 100mm PT100 PROCESS SENSOR ASSY.

TOLERANCE: +0.25 -0.25 UNLESS STATED OTHERWISE. DOES NOT APPLY TO ASSY. DWGS.

PART NUMBER: FARNELL 725-5421

DRAWN	CHECKED	DATE	SCALE
J.S.C		19.11.98	N.T.S

DRAWING No. 010007TD

THIS DRAWING REMAINS THE PROPERTY OF LABFACILITY LIMITED AND MAY NOT BE REPRODUCED WITHOUT OUR PERMISSION.

SHEET 1 OF 2 SHEETS | SHEET SIZE: A3