SIEMENS

SIMATIC

SIMATIC Box PC 620

Manual

Preface, Table of Contents

1 Product Overview

2 Commissioning the SIMATIC Box PC 620

3 Welcome to the SIMATIC Box PC 620

4 Setting-up and Operating the SIMATIC Box PC 620

5 SIMATIC Box PC 620 Expansions

6 Configuring the SIMATIC Box PC 620

7 Error Diagnosis

8 Hardware Information

Appendix

A Guidelines for ESD

Glossary, Index

Edition 08/2001

C79000-G7076-C639-04

www.rgbautomatyka.pl

Safety information

This manual contains information which you must observe for your personal safety and to prevent material damage. The information is denoted by a warning triangle and is represented as follows, depending on the degree of endangerment:

Warning

means that death, serious injury or considerable material damage **can** result, if the appropriate safety precautions are not taken.

Caution

means that slight injury or material damage can result, if the respective safety precautions are not taken.

Note

is an important piece of information about the product, the handling of the product or the respective part of the documentation which should be noted in particular.

Qualified personnel

Only **qualified personnel** may make changes to the device on the basis of the technical description. Qualified personnel are persons, who have the authorisation to install, ground and label, devices, systems and circuits in accordance with the standards of safety engineering.

As directed use

Please note the following:

Warning

The device may only be used for the application cases specified in the catalogue and the technical description and may only be used in combination with extraneous equipment and components recommended or approved by Siemens.

Appropriate transport, appropriate storage, installation and assembly as well as careful operation and maintenance are required to ensure that the product operates perfectly and safely.

Trademarks

SIMATIC®, SIMATIC HMI ® and SIMATIC NET® are registered trademarks of Siemens AG.

The remaining marks in this publication may be trademarks, whose use by third parties for their own purposes could violate the rights of the owner.

Copyright © Siemens AG 2000 All rights reserved

The transmission and reproduction of this documentation and the exploitation and communication of its contents are not allowed, unless expressly granted. Contraventions are liable to compensation for damage. All rights reserved, especially in the case of the granting of a patent or registration by GM.

Siemens AG
Bereich Automatisierungs- und Antriebstechnik
Geschäftsgebiet Industrie-Automatisierungssysteme
Postfach 4848, D- 90327 Nürnberg

Exclusion of liability

We have checked the content of this publication for compliance with the described hard– and software. However, discrepancies cannot be excluded, with the result that we assume no guarantee for total compliance. The information in this publication is checked regularly, and any necessary corrections are included in the following editions. We would be grateful for any suggestions for improvement.

© Siemens AG 2000
Subject to technical change.

Excellence in Automation & Drives: Siemens

Preface

What this Manual is About

This manual contains all the information you need for working with the SIMATIC Box PC 620 programming device. You can use it to

- unpack the programming device and power it up.
- familiarize yourself with the functions and settings of the various components (display, keyboard, programming facilities etc.).
- connect the programming device up to other units of equipment (programmable controllers, other programming devices).
- expand your system, provided you comply with the necessary conditions.
- analyze and eliminate simple faults.

Who is the Manual Intended For?

The following persons require the manual:

- Users commissioning the programming device themselves or working with it (editing, programming or debugging).
- System administrators operating the programming device in a network.
- Service and maintenance personnel using the SIMATIC Box PC 620 for system expansion purposes or error/fault analysis.

Scope of the manual

The content of this manual describes the as delivered condition of the SIMATIC Box PC 620 for January 2000. You will find the currently valid technical data for your device in the operating manual which is supplied with the device.

Approvals

You will find the approvals, certificates and certifications valid for your device in Chapter 1 of the operating manual.

Product name SIMATIC Box PC 620

The abbreviation PC is also used in this publication for the product name SIMATIC Box PC 620.

Information Classification

The following publication is enclosed with your SIMATIC Box PC 620 which enables you to carry out initial installation and commissioning:

- The operating manual of the SIMATIC Box PC 620 with the **applicable technical data and software**.

Please refer to the associated manuals for further directions for handling the software.

Pointers through the Manual

The manual contains in the Chapters 1 to 4 the most important instructions for starting up and using the programming device of the SIMATIC BOX PC 620. Chapters 5 to 8 are reference sections you will require only in special cases.

Installation

Before you use the SIMATIC BOX PC 620 for the first time, read Chapter 2 about the possibilities for assembly and installation on the SIMATIC Box PC 620's components and functionality.

Start up

Chapter 4 describes the basics steps necessary for starting up the SIMATIC BOX PC 620.

Expansion

Chapter 4 describes how to expand your SIMATIC BOX PC 620 (e.g. installation of memory expansions). Please observe the safety notes.

Configuration

Modifications to the system hardware may make it necessary for you to adapt the original hardware configuration. Chapter 6 tells how to proceed in this case.

Error/Fault Dignostics

Chapter 7 will tell you how to deal with simple faults that you can diagnose and, in some cases, eliminate yourself.

Reference Data

Chapter 8 contains hardware addresses, interrupt assignments and information on connecting cables.

ESD instructions

The instructions for handling electrostatic sensitive devices are of particular importance for service and maintenance engineers who install expansions or carry out error analysis with the SIMATIC Box PC 620.

Glossary

The glossary explains important terms.

Alphbetical Index

The index will enable you to quickly find passages in the text pertaining to important keywords.

Further support

Please contact your Siemens contact person at a maintenance and repair location or the SIMATIC hotline iif you have any questions about using the SIMATIC Box PC 620 which are not answered in the manual. You will find the addresses in the operating manual.

Table of contents

Preface . . . . . **iii**

1 Product Overview **1-1**

2 Commissioning the SIMATIC Box PC 620 . . . . . **2-1**

2.1 Unpacking and Checking the Scope of Delivery 2-2

2.2 Installing the SIMATIC Box PC 620 2-3

2.3 Preparing for Operation 2-9

2.4 Transport 2-11

3 Welcome to the SIMATIC Box PC 620 . . . . . **3-1**

3.1 Right-Hand Side of the Device (Port Side) 3-2

3.2 Left-Hand Side of the Device (Drive Side) 3-4

3.3 Ports 3-5

3.4 PC Card Port 3-7

3.5 Drives 3-9

3.5.1 Disk Drive (Depending on the Device Configuration) 3-9

3.5.2 LS 120 Drive (Depending on Device Configuration) 3-10

3.5.3 Hard Disk Drive 3-11

3.5.4 CD-ROM Drive (Depending on the Device Equipment) 3-11

3.6 Backup Battery 3-14

4 Setting Up and Operating the SIMATIC Box PC 620 . . . . . **4-1**

4.1 Connecting the SIMATIC Box PC 620 to the Power Supply 4-2

4.2 Connecting Peripheral Devices 4-5

4.3 Working with PC Cards 4-10

4.4 Connecting the SIMATIC Box PC 620 to other SIMATIC S5 4-13

4.5 Connecting the SIMATIC Box PC 620 to a SIMATIC S7 Network (MPI/DP) 4-18

4.6 Networking the SIMATIC Box PC 620 with Other Stations on PROFIBUS 4-20

4.7 Networking the SIMATIC Box PC 620 and Other Computers on Industrial Ethernet 4-21

4.8 Connection under Windows 4-21

5 SIMATIC Box PC 620 Expansions 5-1

5.1 Opening the Unit 5-2
5.1.1 Prerequisites 5-2
5.1.2 Opening the SIMATIC BOX PC 620 5-4
5.1.3 Components Visible After Opening the Unit 5-5
5.1.4 Block Diagram of the Motherboard 5-6
5.1.5 The Motherboard 5-7

5.2 Installing Memory Expansion Submodules 5-9

5.3 Replacing the Backup Battery 5-11

5.4 Installation of Expansion Cards 5-13
5.4.1 Removal and Installation of the Device for Holding Down the modules . . 5-15
5.4.2 Removal and Installation of an Expansion Card 5-17

5.5 Removal and Installation of Drives 5-18
5.5.1 Removal and Installation of the Hard Disk Drive 5-18
5.5.2 Removal and Installation of a CD-ROM Drive 5-20
5.5.3 Removal and Installation of the Floppy Drive 5-21
5.5.4 Removal and Installation of the LS 120 Drive 5-22

5.6 Removal and Installation of the Power Supply Unit 5-23

5.7 Removal and Installation of the Bus Board 5-24
5.7.1 Removal and Installation of the Motherboard 5-25

5.8 Removal and Installation of the Fan 5-26

5.9 Processor Upgrade 5-27

5.10 Switch Settings / Jumpers 5-28

5.11 Reset Button 5-29

6 Configuring the SIMATIC Box PC 620 6-1

6.1 Changing the Device Configuration with SETUP 6-2
6.1.1 The Main Menu 6-5
6.1.2 The Advanced Menu 6-15
6.1.3 The Security Menu 6-23
6.1.4 The Power Menu 6-25
6.1.5 The Boot Sequence Menu 6-27
6.1.6 The Version Menu 6-29
6.1.7 The Exit Menu 6-30
6.1.8 Default Setup Settings 6-31

6.2 Configuring the PC Card 6-34

7 Error Diagnosis 7-1

7.1 Diagnosing Errors 7-2

7.2 Self-Test of the SIMATIC Box PC 620 before Booting 7-3

8 Hardware Information 8-1

8.1 Current Requirement of the Components (Maximum Values) 8-2

8.2 Overview of the Components and Ports 8-3

8.3 Hardware Address Table 8-4

8.4 Interrupt Assignments 8-8

8.5 Video Modes 8-10

8.6 Monitoring functions 8-11
8.6.1 Overview 8-11
8.6.2 Signals on the Front Interface 8-11
8.6.3 Temperature Monitoring/Indication 8-12
8.6.4 Watchdog (WD) 8-13

8.7 Ports 8-14
8.7.1 External Ports 8-14
8.7.2 Assignment of the Front Ports on the Motherboard 8-25
8.7.3 Assignment of the Internal Ports on the Motherboard 8-30

8.8 Bus Board 8-38
8.8.1 Design and Mode of Operation 8-38
8.8.2 Interface to the Motherboard 8-39

8.9 CD-ROM Drive 8-44

8.10 Power Supply (AC) 8-46

8.11 Power Supply (DC) 8-47

8.12 Connecting Cables 8-48

A Guidelines for handling electrostatic sensitive devices (ESD) A-1

A.1 What does ESD mean? A-2

A.2 Electrostatic charging A-3

A.3 Basic protective measures against discharge of static electricity A-4

Glossary Glossar-1

Index Index-1

Product Overview

1

Overview

The SIMATIC Box PC 620 serves as an entry level system for PC-based automation, a basic component for PC-based HMI devices (Panel PC), a basic component for PC-based machine control panels (OP031, OP032S, OP032L) and in special configurations as a basis for devices with a customised construction.

The SIMATIC Box PC 620 is intended for use in the industrial sector as well as in residential and commercial areas and small businesses. In addition to the industrial applications, it can also be used in building services automation or in facilities open to the public.

Features

The SIMATIC Box PC 620 is a compact box computer with Pentium II mobile technology.

The SIMATIC Box PC 620 is a particularly powerful industrial PC for installation as a box system. It is flat, ruggedized and designed for continuous operation. On account of its low dimensions, it can be fitted into areas where little space is available.

Quality

The SIMATIC Box PC 620 has a high quality standard. For example:

- Extensive climate, vibration and shock tests to guarantee industrial compatibility;
- Electromagnetic compatibility according to CE and FCC;
- UL-/CSA-approval;
- Hotline, Service, spare parts;
- Quality assurance in accordance with ISO 9001.

Range of Application

The SIMATIC Box PC 620 is a basic device for high performance automation solutions. It meets the highest requirements through:

- compliance with the requirements for a fire enclosure to EN60950/UL508 (device with AC power supply), i.e. it may be used without an additional fire enclosure,
- extremely compact dimensions,
- suitability for continuous 24 hour operation,
- serviceability in a wide ambient temperature range,
- high robustness,
- a design which is extremely easy to service and maintain.

Fitting Option

The SIMATIC Box PC 620 can be installed in all the usual positions.

There are anchorage points on both of the long sides for securing the box. Mounting brackets can be screwed on to these anchorage points.

Functions

The SIMATIC Box PC 620 is equipped with software that allows it to be used universally. The following software packages are available:

- Operating system Windows NT Server or Workstation;

or

- Operating system Windows 98

or

- Operating system Windows 2000

Due to its hardware, the SIMATIC Box PC 620 additionally allows the use of:

- SIMATIC supplementary software
- Software from the entire world of automation
- Software from the PC world

Further Areas of Application:

The SIMATIC Box PC 620 can also be used in other areas of automation (SIMATIC HMI; TELEPERM; SINUMERIK; SIROTEC etc.).

Advantages of the SIMATIC Box PC 620

- The rugged design and functionality of the SIMATIC Box PC 620 make it particularly suitable for use on site under hostile industrial conditions. The SIMATIC Box PC 620 meets the specific requirements of industrial environments, such as noise immunity, compliance with the relevant standards, ruggedness, simple transportation, and startup.
- The SIMATIC Box PC 620 can be set up and operated in a large number of different ways and positions, and can therefore be used practically everywhere it is needed.
- The SIMATIC Box PC 620 has all the integral ports necessary for connecting it to SIMATIC automation devices:
  - Parallel port (LPT1)
  - Serial ports (1x V.24, 1x V.24/TTY)
    Without TTY for the basic variant of the Box PC
  - PS/2 keyboard port (supports PG720/740 keyboard with track ball
  - PS/2 mouse port
  - USB port (1x internal, 1x external)
  - MPI/L2-DP (max 12 MBaud)
    Not available for the basic variant of the Box PC
  - PC Card port, 1 slot (type III)
  - Ethernet port (RJ45)
  - VGA port for external monitor
  - LVDS port for flat display
- The SIMATIC Box PC 620 is suppplied with the Windows NT or Windows 98 or Windows 2000 operating system preinstalled on the hard disk.

Commissioning the SIMATIC Box PC 620

2

Overview of Chapter

In chapter	you will find	on page
2.1	Unpacking and Checking the Scope of Delivery	2-2
2.2	Installing the SIMATIC Box PC 620	2-3
2.3	Preparing for Operation	2-9
2.4	Transport	2-11

2.1 Unpacking and Checking the Scope of Delivery

Unpacking the SIMATIC Box PC 620

Unpack your SIMATIC Box PC 620 programming device as follows:

1. Remove the packing.
2. Do not throw the original packing away. Keep it in case you have to transport the unit again sometime in the future.
3. Please keep the documentation in a safe place. It is required during the initial start up (see Section 5.2) and is part of the device.
4. Check the packing and its contents for any shipping or transport damage.
5. Check with the packing list to make sure no components are missing. Also check the accessory parts, which you can order separately.
6. Please inform your local dealer of any shipping or transport damages and of outstanding items indicated on the packing list.

Recording the Serial Number

Enter the serial no. of your SIMATIC Box PC 620 in the table. It is on the name plate above the floppy disk drive.

If a programming device is stolen and subsequently submitted for repair, the repair center will be able to identify it by the serial number (F-No).

F-No.	
MLFB-No.	

2.2 Installing the SIMATIC Box PC 620

The SIMATIC Box PC 620 can be operated in all the usual fitting positions. It is particularly suitable for fitting in consoles, switch boards and control panels.

The SIMATIC Box PC 620 **with AC power supply** meets the requirements for a fire enclosure to EN60950. it can therefore be fitted without an additional fire enclosure.

The SIMATIC Box PC 620 **with DC power supply** is an open device (right device side); therefore the mounting must meet the requirements of a fire enclosure.

Please note the following points when installing the PC:

- Avoid extreme ambient conditions as far as possible. Protect your PC from dust, moisture, and heat.
- Keep the PC out of direct sunlight.
- Mount the PC as safely as possible to prevent any danger (for example, by falling over).
- The clearance around the housing must be at least 100 mm at the front and rear, so that the PC is sufficiently ventilated.
- Make certain that the ventilation slots for the housing are not covered.
- Observe the permissible fitting positions without fail when installing the systems.

Warnung

If the systems are installed in a non-permissible fitting position, the approvals pursuant to UL 1950, UL 508 and EN60950 are no longer valid!

Depending on the configuration of the device, two mounting brackets are included in the scope of delivery. You can attach these to the housing with 6 screws (M3x6).

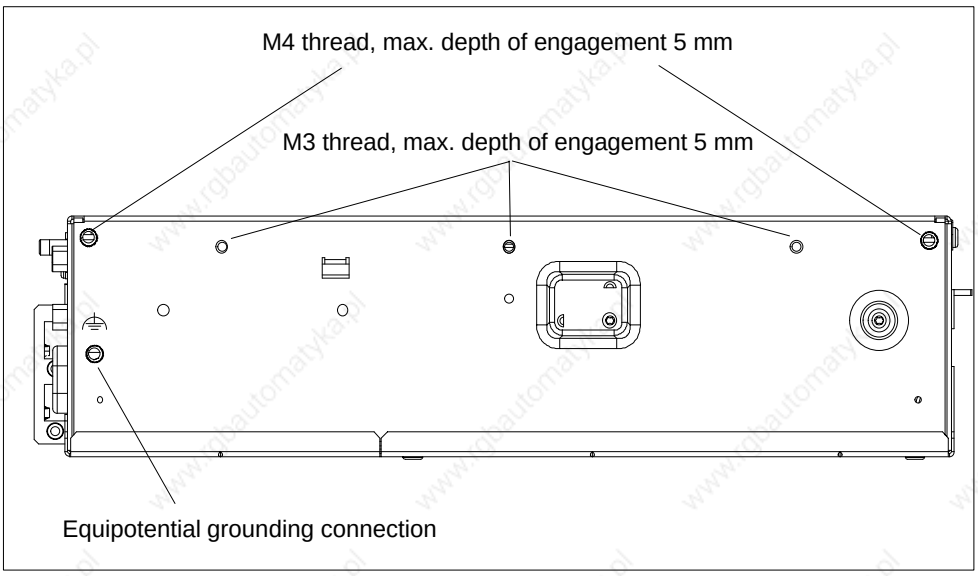

Figure 2-1 Screw Connection Points for Mounting Brackets (Cover Side Downwards)

Instructions for wall and ceiling mounting

To install the SIMATIC Box PC 620 in a concrete wall or ceiling proceed as follows:

1. Fix the mounting brackets at the housing of the PC.
2. Drill four holes of 8 mm diameter and 60 mm depth into the wall or ceiling. You will find the required dimension drawings on the following pages.
3. Insert the concrete plugs (8 mm diameter and 50 mm long) into the drill holes.
4. Fix the PC with four screws (4 mm diameter and 50 mm long).

In a plasterboard wall or ceiling (min. 13 mm thick), drill holes of 14 mm diameter and fasten the PC with four anchors (4 mm diameter and 50 mm long).

In a metal sheet wall or eiling (min. 2 mm thick), drill holes of 5 mm diameter and fasten the PC with four screws (4 mm diameter and min. 15 mm long).

Warnung

The installer must verify that the wall or ceiling can support four times the full load of the SIMATIC Box PC 620 (with mounting brackets and Add-On-Cards).

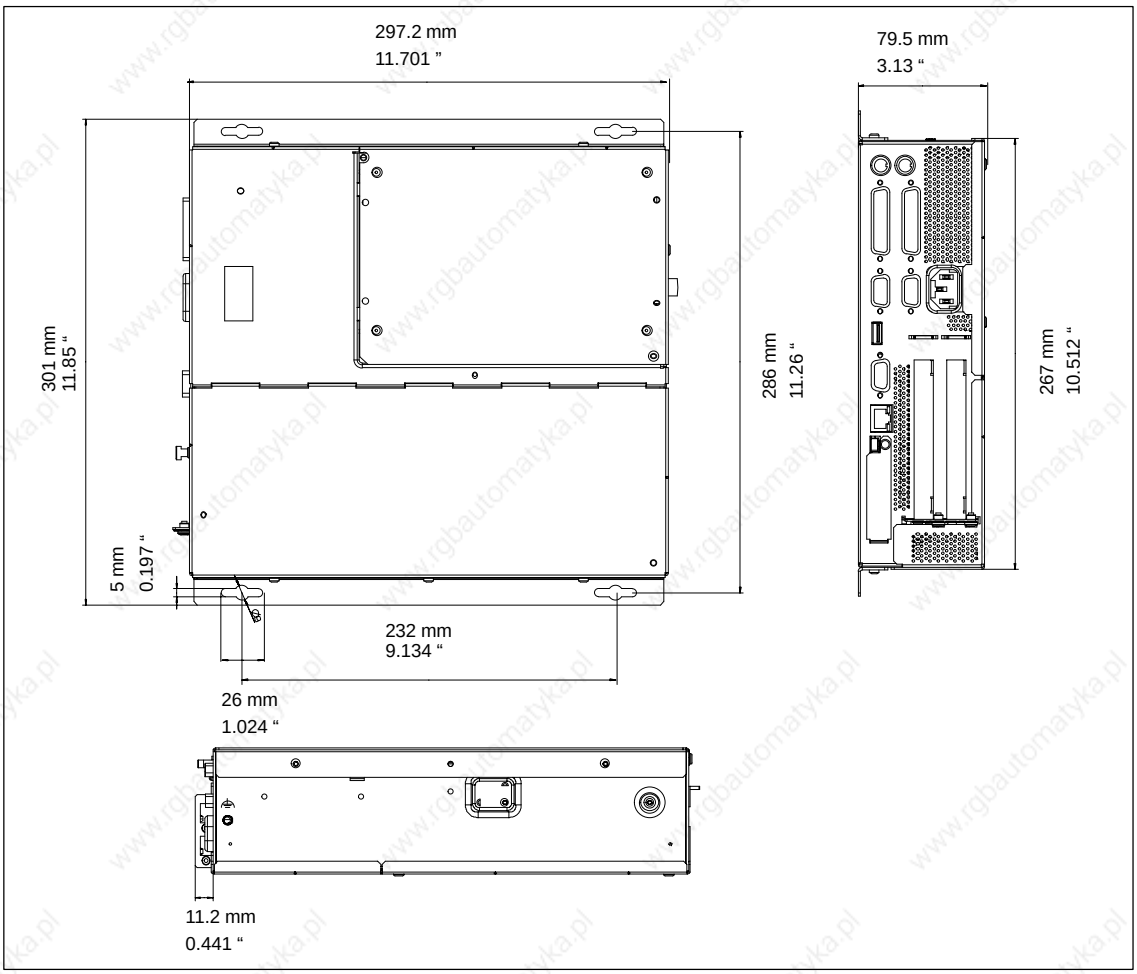

Figure 2-2 Dimension Drawings for Fitting in Control Panel with Installation Angle (Device without CD-ROM Drive)

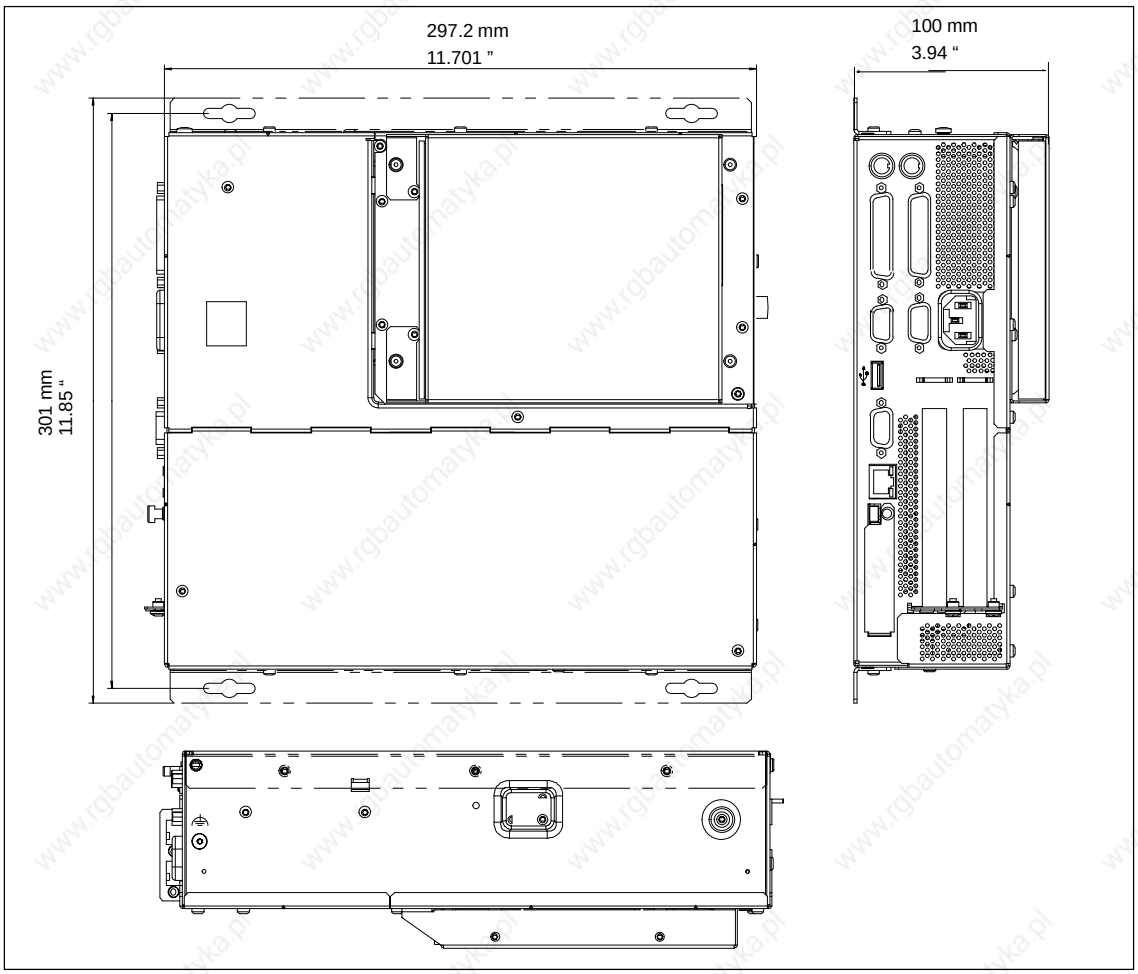

Figure 2-3 Dimension Drawings for Fitting in Control Panel with Installation Angle (Device with CD–ROM Drive)

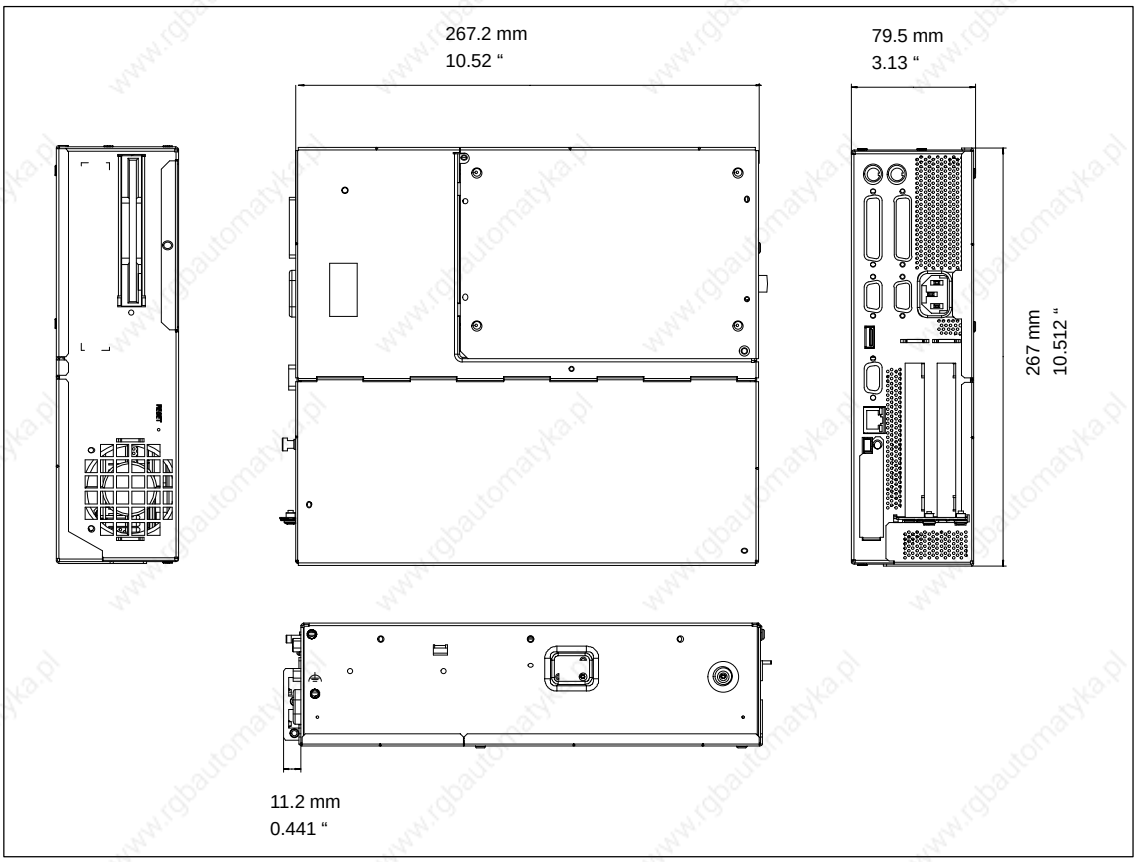

Figure 2-4 Dimension Drawings for Fitting in Control Panel without Installation Angle

Permissible Fitting Positions of the PC with Floppy Disk Drive

An inclined position of ± 20° is allowed in each of the permissible fitting positions.

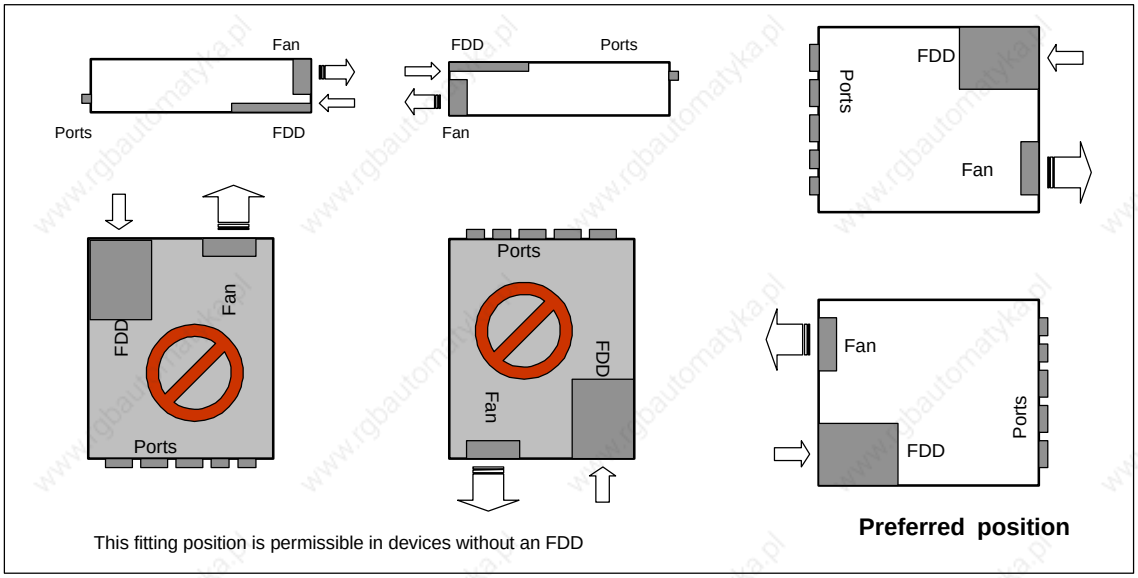

Figure 2-5 Permissible Fitting Positions of the PC with Floppy Disk Drive

Permissible Fitting Positions of the PC with LS120

An inclined position of ±15° is allowed in each of the permissible fitting positions.

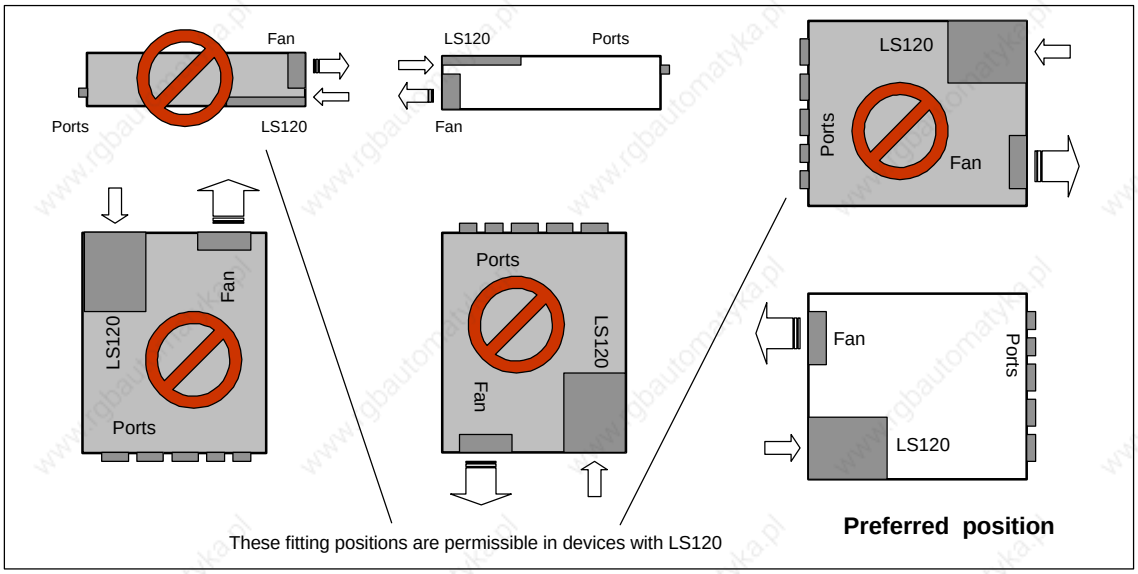

Figure 2-6 Permissible Fitting Positions of the PC with LS120

2.3 Preparing for Operation

Connection to the Power Supply Unit

Note

The SIMATIC Box PC 620 is equipped with a safety-tested mains cable and may only be connected to a grounded grounding outlet.

Make sure that the socket on the device or the grounding outlet of the building installation is easily accessible and as near as possible to the device.

The SIMATIC Box PC 620 has no mains switch. The mains plug must be pulled out for complete mains separation. This point must be easily accessible.

If the PC is installed in a cabinet, there must be a central mains disconnector.

The standard power supply unit of the SIMATIC Box PC 620 is designed for 115/230V systems.

The power supply unit has automatic mains voltage changeover. It is not necessary to adjust the voltage span.

Equipotential Measures

Low-impedance ground connections ensure that faults arising from external power supply cables, signalling cables or cables to peripheral units are diverted.

Therefore connect the equipotential grounding connection on the system housing to the central earth terminal of the cabinet or the unit, into which the computer is fitted, in such a way that it has low impedance (large surface area, large contacts). The minimum cross section should not be less than 5 mm^2.

The connection is on the side of the device and is identified by the symbol:

Connecting and Switching on the SIMATIC Box PC 620

Before you connect the SIMATIC Box PC 620 to the mains, the keyboard, mouse and display or monitor must be connected.

1. Insert the connector cable of these peripheral units into the corresponding sockets on the port side of the SIMATIC Box PC 620 (see Section 4.2.)
2. Once the peripheral units have been connected, the device is ready for operation from the power supply. Connect the device to the mains. The SIMATIC Box PC 620 is now in service.

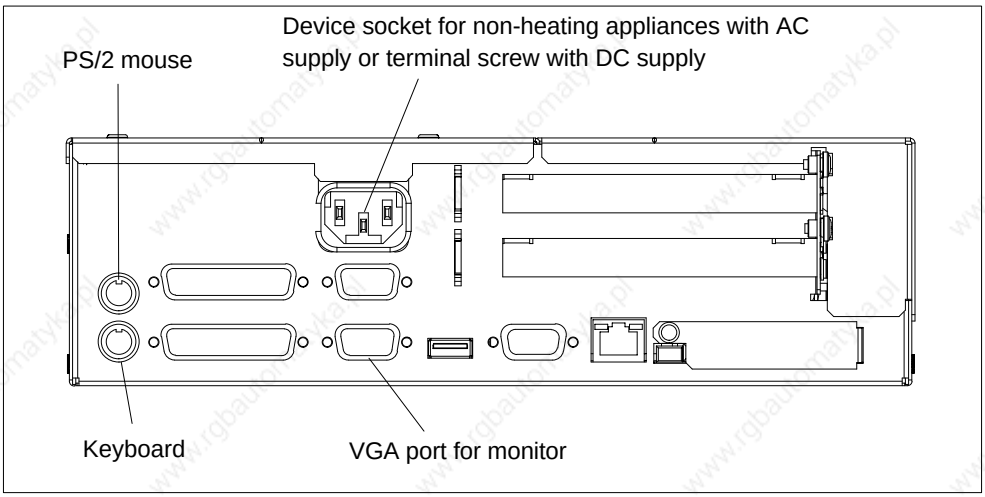

Figure 2-7 Connecting and Switching on the SIMATIC Box PC 620

Switching off the SIMATIC Box PC 620

The SIMATIC Box PC 620 has no mains switch and is switched off after only disconnection from the mains.

2.4 Transport

Transporting

Despite the fact that the SIMATIC Box PC 620 is of rugged design, its internal components are sensitive to severe vibrations or shock. You must therefore protect the PC from severe mechanical stress when transporting it.

Use the **original packing material** if you have to ship the SIMATIC Box PC 620 from one location to another.

Caution

Risk of damage!

When transporting the PC in cold weather, when it may be submitted to extreme variations in temperature, make sure that there is no moisture (condensation) on or in the PC.

The PC must be allowed to reach room temperature slowly before you switch it on. If condensation has formed, you should wait approximately 4 hours before switching on the PC.

Welcome to the SIMATIC Box PC 620

3

Overview of Chapter

In chapter	you will find	on page
3.1	Right-Hand Side of the Device (Port Side)	3-2
3.2	Left-Hand Side of the Device (Drive Side)	3-4
3.3	Ports	3-5
3.4	PC Card Port	3-7
3.5	Drives	3-9
3.6	Backup Battery	3-14

3.1 Right-Hand Side of the Device (Port Side)

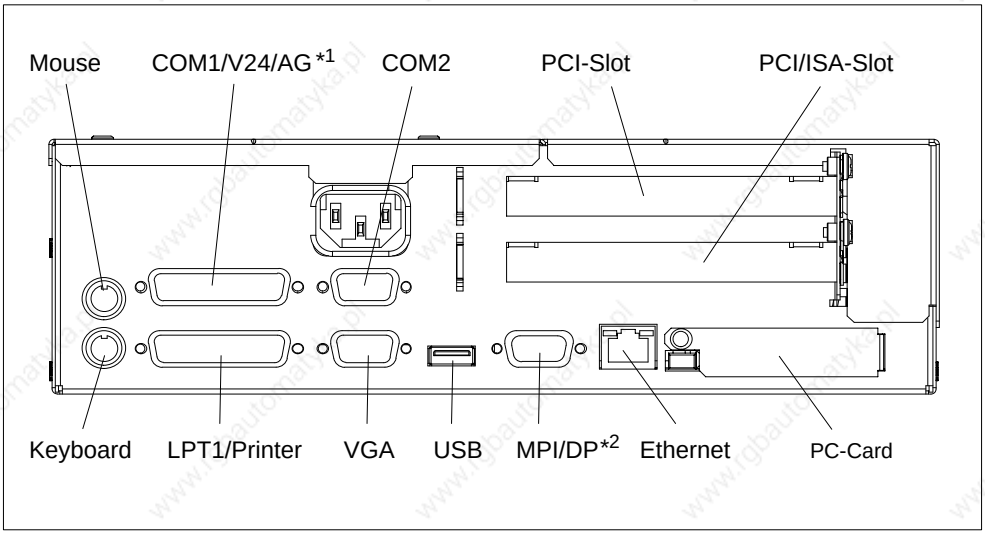

Figure 3-1 Right-Hand Side of the Device with Ports

*1 Without TTY for the basic variant of the Box PC

*2 Not available for the basic variant of the Box PC

Note

Ensure that you use shielded cables and metal plugs to connect the peripheral units; if this is not done, the approval for operation will be invalid! Screw down the plugs of the interface cables to the PC housing by means of a screwdriver. You thereby improve the electrical shielding.

Connections	Function
VGA	VGA port for connecting an external monitor, 15 pins, subminiature Cannon connector, sockets
COM1/V24/AG *3	Serial port 1 (V24, via BIOS-Setup can be switched to TTY) 25pin), 25 pins, subminiature Cannon connector, sockets
COM2	Serial port 2 (V24) 9 pins, subminiature Cannon connector, pins
Mouse	PS/2 mouse connector
Keyboard *1	PS/2 keyboard connection
LPT1/Printer	Parallel port, connection for devices with parallel interface (e.g. printer), 25 pins, subminiature Cannon connector, sockets
MPI/DP (RS 485) *2	Multi-Point interface / Profibus DP connection Connection of an S7 programmable controller, 9 pins, subminiature Cannon connector, socket
Ethernet	Connection for local network (LAN), RJ45
USB	Connection for Universal Serial Bus
PC-Card	Connection for PC cards Type I/II/III
PCI slot	Internal slot for expansion modules
PCI/ISA slot	Internal slot for expansion modules
Device socket for non-heating appliances with AC supply or terminal screw with DC supply	Power suppply

If expansion modules have been inserted in the PC, there are additional ports. Please refer to the description of the respective module for their purpose.

*1 Keyboards with an integrated track ball (e.g. PG 720 or PG 740) can be connected.

*2 Electrical isolation through an extra-low voltage safety circuit (SELV). MPI/DP is not available for the basic variant of the Box PC.

*3 You change the connection into a male connector by attaching the gender changer (constituent part of the source material package. Without TTY for the basic variant of the Box PC.

3.2 Left-Hand Side of the Device (Drive Side)

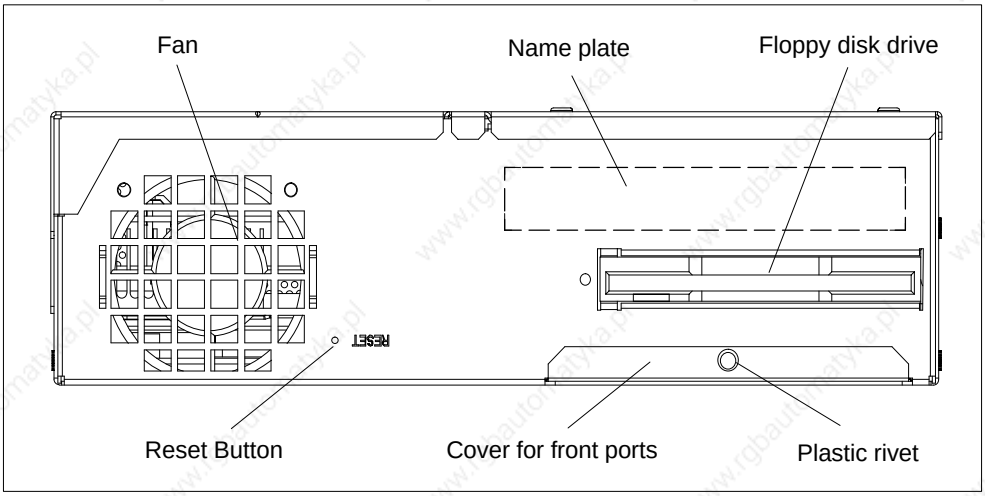

Figure 3-2 Left-hand Side of the device

Connections	Function
Fan	Cooling
Floppy disk drive with ejector (LS120 as an option)	Use of 3,5” diskettes
Front ports	Connection of front elements
Reset button	Reset of the SIMATIC Box PC 620 (cold start)

Reset Button

The reset button can be actuated with a pointed object (e.g. an opened up paper clip).

If you actuate, the button, a hardware reset is triggered. The PC restarts.

Caution

Data loss is possible with a hardware reset.

3.3 Ports

Front Ports

The front ports are located behind the cover below the floppy disk drive. They are used for connection of the following front elements:

- I/O port for the connection of front components
- LVDS display port
- CMOS display port

The front ports can be accessed as follows:

1. Undo the plastic rivet on the cover below the floppy disk drive with a flat screwdriver.
2. Pull the cover out of the guide. The front ports are now accessible.

The CMOS display port is only accessible after removal of the floppy disk drive.

Note

Keep the cover and the plastic rivet for reuse.

VGA Port

Please read the following note referring to the operation of a flat display and an external monitor:

Hinweis

The default setting of the display provides the simultaneous operation of a flat display and an external monitor. If no front display element is connected, the display is effected on the external monitor with a resolution of 640 x 480 pixels. Modes with a lower resolution and text modes are expanded to this format.

To optimize the screen display for an external monitor, select ”Hardware Options” under Setup in the main menu and set ”CRT/LCD selection: CRT enabled”. A resolution of 1024 x 768 pixels with a higher refresh rate is then possible.

Connecting USB Devices

You can connect peripheral devices with USB interfaces to the USB port.

- Plug the USB cable into the port

  The device connected in this way is available as soon as it has been registered by the Plug and Play operating system (e.g. Windows 98).

  A USB keyboard can be used to manipulate the Bios setup.

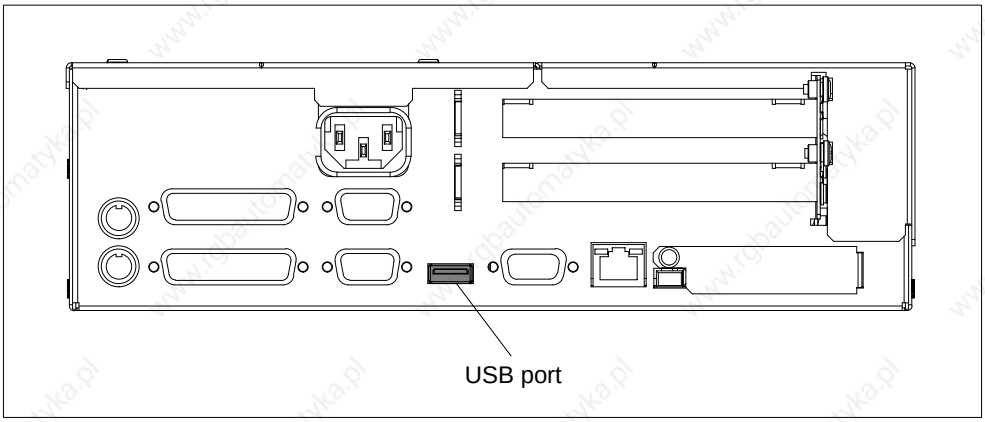

Figure 3-3 Connection of USB Devices

Note

Operating systems which do not support Plug and Play (e.g. Windows NT 4.0) do not generally allow the operation of USB devices.

3.4 PC Card Port

Cardbus cards and PCMCIA cards can be operated through the PC card port of the SIMATIC Box PC 620.

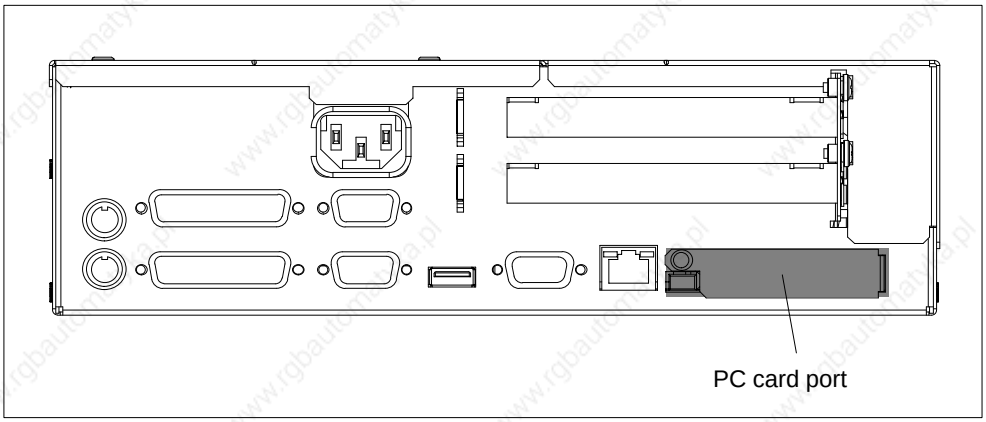

Figure 3-4 PC Card Port

The following is to be observed when working with cardbus/PC cards:

1. Open the port cover on the left–hand side of the device by undoing the plastic rivet with a flat screwdriver.
2. Pull the cover out of the guide.
3. Insert the desired PCMCIA card or cardbus card.

Caution

Before inserting PC Cards please make sure that the PC Card Ejector is completely pressed otherwise the cards e.g. Flash Memory Cards could get stuck in the slot. The PC Cards cannot be inserted correctly.

Always insert the PC card with the **label** toward the rear of the programming device.

Do not remove the PC card while data transfer is in progress (risk of data loss and system crash).

Caution

Always discharge your body's charge of static electricity by briefly touching a grounded object before inserting or removing a PC card (see ESD Guideline in Section A.1 or electronic manual).

Otherwise damage could occur.

Note

Peak currents of 650 mA at 5 V based on 3 s are permitted!

Examples of PCMCIA cards connected to PC card interface for

Hard Disk	330 mA *read/write*
(Maxtor MXL-131-III)	640 mA *spin up 2 s*
. . . . .	110 mA *idle*
Fax/modem	60 mA *idle*
(Dr. Neuhaus)	140 mA *transfer*
Ethernet	
(XIRCOM)	150 mA

Installing PC Cards

Note the following when installing these cards:

Note

Depending on the configuration of the SIMATIC Box PC 620, there may not be any free interrupts available for operating PC Cards. You have to reserve the necessary PC card interrupts in the BIOPS setup menu as follows:

Set the necessary interrupt via **Advanced > PCI-Configuration > PCI/PNP ISA IRQ Resource Exclusion** to “reserved” (default: available).

3.5 Drives

The SIMATIC Box PC 620 is equipped as standard with a 3.5” disk drive or an LS120 drive and a 3.5” hard disk drive.

3.5.1 Disk Drive (Depending on the Device Configuration)

You can store programs and data on diskettes with the disk drive and load them from diskettes into the SIMATIC Box PC 620.

Types of Diskette

You can use following diskettes:

Double Sided High Density Diskette	Double Sided Double Density Diskette
3.5 in.	3.5 in.
1.44 Mbytes (135 TPI)	720 Kbytes

Handling Diskettes with the Floppy Disk Drive

The diskette is inserted in the disk drive as shown below:

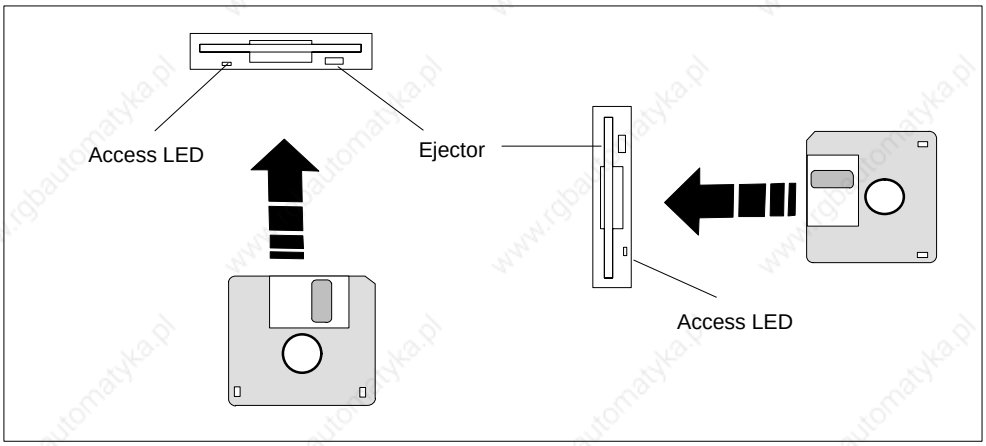

Figure 3-5 Handling Disks

When the floppy disk drive is being accessed, the access indicator light is lit.

Caution

Risk of loss of data!

When the green access LED of the floppy disk drive is lit, the ejector may not be actuated.

3.5.2 LS 120 Drive (Depending on Device Configuration)

The SIMATIC Box PC 620 can be equipped with an LS 120 drive as an alternative to a floppy disk drive.

Larger volumes of data can be stored on LS 120 data carriers than on a 1.44 MB floppy disk drive. The LS 120 has the following features:

- The LS 120 is compatible with a 1.44 MB floppy disk drive, i.e. 1.44 MByte disks can also be processed.
- An LS 120 data carrier has a maximum data volume of 120 MBytes.
- The LS 120 is connected via an ATAPI (IDE) port.

Handling Disks with the LS 120 Drive

Depending on the fitting position, the disks are inserted into the disk drive as illustrated below:

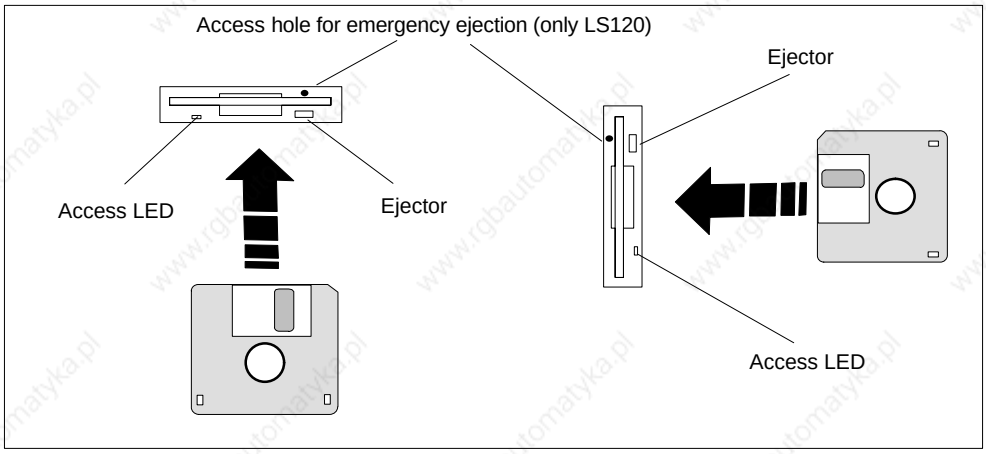

Figure 3-6 Handling Disks

When the LS 120 drive is being accessed, the access indicator light is lit.

Emergency ejection is carried out in the same way with the LS120 as in the CD-ROM drive. See Section 3.4.4. for details.

Caution

Risk of loss of data!

When the green access LED of the LS 120 drive is lit, the ejector may not be actuated.

LS 120 drives are very sensitive to shocks of a non-permissible level. Shocks during operation can lead to damage to the drive or the data carrier. You can find the permissible values in the technical data in Section 7.1.

3.5.3 Hard Disk Drive

The hard disk drive is used for the storage of large quantities of data. it is fitted in a mounting which is easily exchangeable and damped against vibration.

Caution

Risk of loss of data and damage to the drive!!

Drives are sensitive to vibrations and shock. Any vibrations occurring during operation can lead to the loss of data or damage to the drive.

If you intend transporting the unit, switch it off, and wait until the drive has come to rest (about 20 seconds) before you move it.

3.5.4 CD-ROM Drive (Depending on the Device Equipment)

Depending on the device equipment, a CD-ROM drive is fitted in the SIMATIC Box PC 620. The fitting depth of the PC is increased by 20 mm as a result. The CD-ROM drive allows you to read CDs.

Opening the Drawer

By briefly pressing the eject button, the drawer springs out slightly. Now pull the drawer out until it clicks into position.

Inserting / Removing CDs

Now insert the CD in the drawer with the labeling face up, and press it firmly down into the center of the turntable. To remove the CD, hold it by the edges and pull upwards.

Caution

To avoid too much pressure on the open drawer, **always** hold the drawer at the front with one hand when inserting or removing a CD.

Closing the Drawer

Push in the drawer until it closes completely. Do **not** press the eject button.

Note

The EJECT function offered by various applications for opening the CD ROM drawer does not work with this drive.

After the drawer has been closed, the CD is tested and the access display light on the drive starts to flash:

- If the display flashes continually, the CD is faulty but can still be read,
- If the display flashes several times and then remains lit, the CD you have inserted is defective and cannot be read.

CD-ROM Front

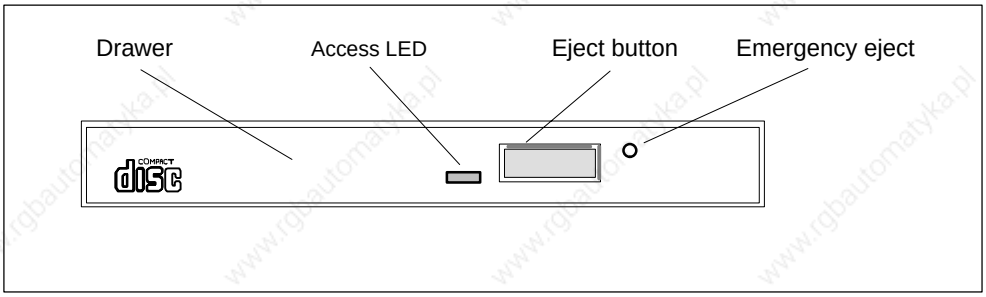

Figure 3-7 CD-ROM Front

Caution

Risk of data loss and damage to the drive!

CD-ROM drives are sensitive to vibrations and shock. Any vibrations occuring during operation can lead to damage to the drive or CD. You can find the permissible values in the technical data in Chapter 7 of the operating manual.

Emergency Eject

The procedure described below can used to remove a disc from the CD ROM reader if the Open/Close button is disabled by software or a power failure occurs. In this case the CD tray cannot be opened automatically.

1. Turn off the power to the CD ROM reader (switch off your device if necessary).
2. Insert a steel rod or a stiff paper clip (with a maximum diameter of 1.3 mm and a mimimum of 55mm) into the emergency eject hole at the front of the drive and push lightly. The CD tray is ejected by about 10 mm. Pull it all the way open by hand and lift the disc out carefully.

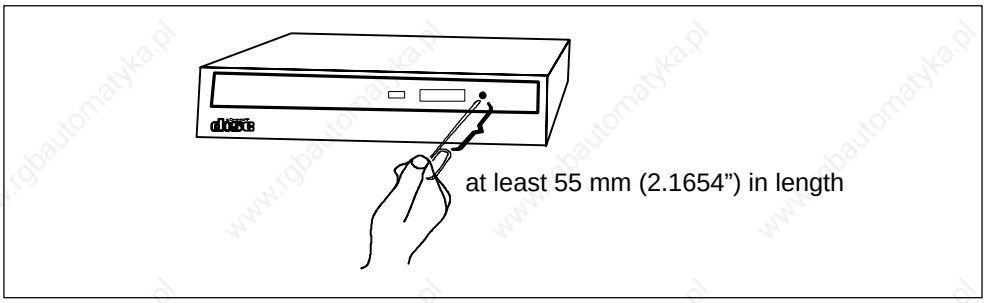

Figure 3-8 Emergency Ejection

3.6 Backup Battery

A backup battery (3.6 V lithium battery) powers the hardware clock even after the programming device is switched off.

There is a battery on the motherboard in this device. Batteries may only be exchanged by technical personnel. Note the information in the documentation of the CPU module! Observe the local regulations on the disposal of special waste when disposing of dead batteries.

Caution

There is the danger of an explosion if the battery is not exchanged as directed. Replace only with the same type or an equivalent type recommended by the manufacturer. Dispose of used batteries in accordance with the manufacturer's instructions.

Warning

Risk of severe personal injury or property damage, danger of release of harmful substances.

There may be a danger of explosion if the battery is not handled properly. Incorrect disposal of used batteries can cause the release of harmful substances.

Do not throw a new or discharged lithium battery into an open fire, do not solder onto the cell container. Do not recharge the battery, do not open the battery by force.

The correct lithium battery is available from Siemens (order no.: W79084-E1003-B1).

Return used batteries to the manufacturer/recycler or dispose of them according to local regulations.

Setting Up and Operating the SIMATIC Box PC 620

4

Chapter Overview

In chapter	you will find	on page
4.1	Connecting the SIMATIC Box PC 620 to the Power Supply	4-2
4.2	Connecting Peripheral Units	4-5
4.3	Working with PC Cards	4-10
4.4	Connecting the SIMATIC Box PC 620 to other SIMATIC S5 Units	4-13
4.5	Connecting the SIMATIC Box PC 620 to a SIMATIC S7 Network (MPI/DP)	4-18
4.6	Networking the SIMATIC Box PC 620 with Other Stations on PROFIBUS	4-20
4.7	Networking the SIMATIC Box PC 620 and Other Computers on Industrial Ethernet	4-21
4.8	Connection under Windows	4-21

4.1 Connecting the SIMATIC Box PC 620 to the Power Supply

Connecting to the Power Supply

You can operate the SIMATIC Box PC 620 on 120 V and 230 V power systems using the external power supply unit. The voltage is selected automatically.

1. Plug the power supply cable supplied into the inlet connector for non-heating appliances
2. Connect the power cable to a socket outlet with a grounded protective conductor.
3. The device is now ready for power supply operation and the battery will be charged if required.

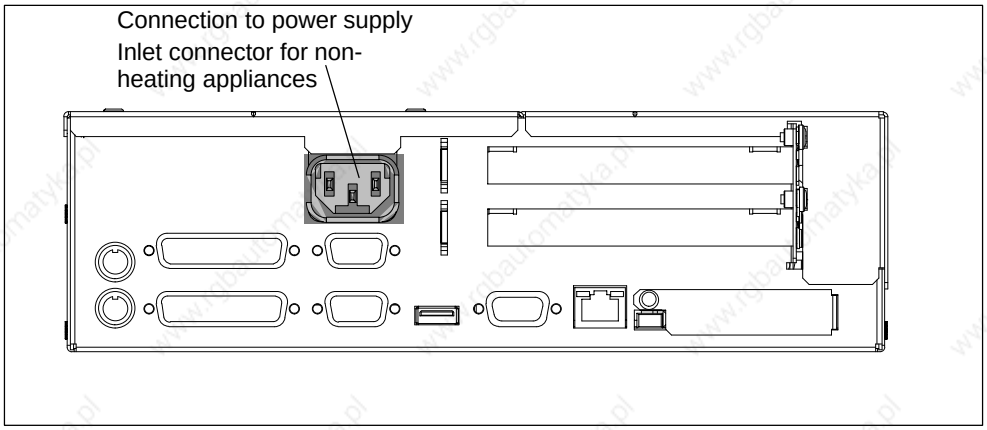

Figure 4-1 Connection to Power Supply (Inlet Connector for Non-Heating Appliances)

Power Connection

The device is intended for poeration in grounded electricity supply systems (TN systems to VDE 0100 part 300 or IEC 364-3).

Service in non-grounded or impedance-grounded supply systems (IT systems) is not intended.

The power line should meet the respective local safety requirements.

Check whether the device's set supply voltage is the same as the local supply voltage.

This device is equipped with a safety-tested power supply cable. You may connect this device only to a grounding outlet with a grounding contact.

Make certain that the socket outlet on the device or the grounding contact for the building wiring system is freely accessible and as near to the device as possible.

The mains switch does not separate the device from the power system. To establish a complete power separation, you must disconnect the power plug (inlet connector on the back of the device). This location must be accessible. A central isolating switch must be present for cabinet mounting.

Install the cables so that no one can step on them or trip over them. When you connect the device, adhere to the relevant instructions in Chapter 2 of this manual.

Do not connect or disconnect power supply cables and data transmission lines during thunderstorms.

In emergency situations (for example, damaged housing, damaged operator elements, a damaged power supply cable, ingress of liquids or foreign particles), switch off the device. Disconnect the power plug and inform the responsible service personnel.

The SIMATIC Box PC 620 must be switched off when you connect or disconnect I/O devices (keyboard, mouse, printer, etc.). You can damage the PC if you do not adhere to these instructions.

When plugging in/unplugging peripheral connections (keyboard, mouse, printer etc.) the SIMATIC box PC 620 must be switched off (not for PC-Card and USB-devices). In the case of non-observance, this can lead to damage to the PC.

Country-Specific Information

For the United States and Canada:

In the United States and Canada USA, a CSA or UL-listed power supply cable must be used.

The male plug is a 5-15 style.

For Operation with 120 V:

Use a UL Listed, CSA Labelles Cord Set, consisting of a min. 18 AWG. Type SVT or STJ three conductor flexible cord, max. 4.5 m (15 feet) in length and a parallel blade grounding type attachment plug rated 15 A, min 125 V.

For Operation with 240 V:

Use a UL Listed, CSA Labelled Cord Set, consisting od a min. 18 AWG. Type SVT or SJT three conductor flexible cord, max. 4.5 m (15 feet) in length and a tandem blade grounding type attachment plug, rated 15 A, 250 V.

For Operation with 230 V (outside of USA and Canada)

Use a Cord Set consisting of a min 18 AWG cord and grounding type attachment plug rated 15 A, 250 V. The cord set should have the approviate safety approvals for the country in which the equipment will be installed and marked.

4.2 Connecting Peripheral Devices

Note

When connecting peripheral units, ensure that the components have industrial capability

Connecting the Printer to the Parallel Port

Proceed as follows to connect your printer:

1. Switch off the SIMATIC Box PC 620 and the printer.
2. Plug the printer cable into the LPT1 parallel port.
3. Connect the printer cable to the printer.
4. Screw the connector tight at the interface port.

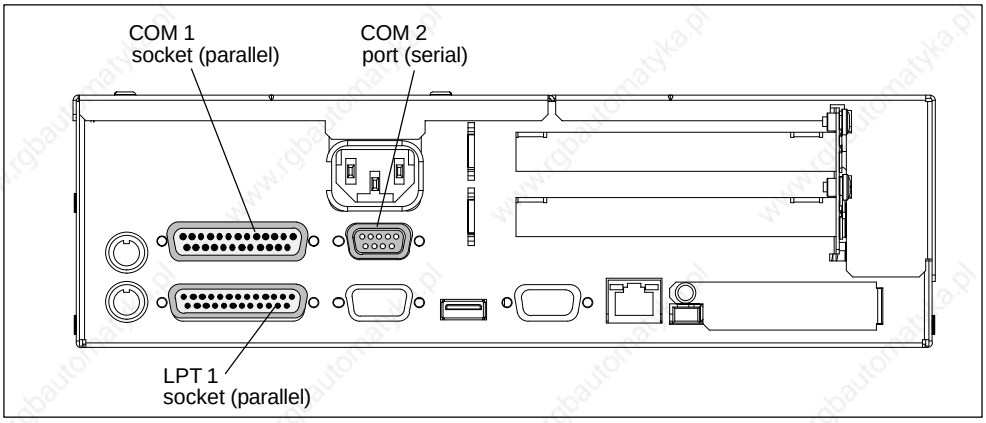

Figure 4-2 Position of the Printer Ports

Caution

Risk of damage to the unit!

Switch the unit off before connecting the parallel printer to the LPT 1 port (the printer should also be switched off).

Make sure that you use the correct port. If you use the wrong port or wrong connecting cables, the port may be damaged.

Before plugging in the cables, the electrostatic charge of your body, the unit, and the cables must be equalized. To do this, touch the mounting plate for the ports on the left-hand side of the unit.

Only use original connecting cables.

Connecting the Printer to the Serial Port

You can also connect your printer to the SIMATIC Box PC using a serial COM port. You will find information on how to adapt and set your interface and which connecting cable you require in the description of your printer.

Connecting Monitors

You connect external multisynchronous monitors using the standard VGA connector on the left-hand panel side of the unit. We recommend that you use a Siemens monitor.

You must switch the SIMATIC Box PC off before connecting the monitor cable. You will find further information about the connector pinout in Chapter 8.

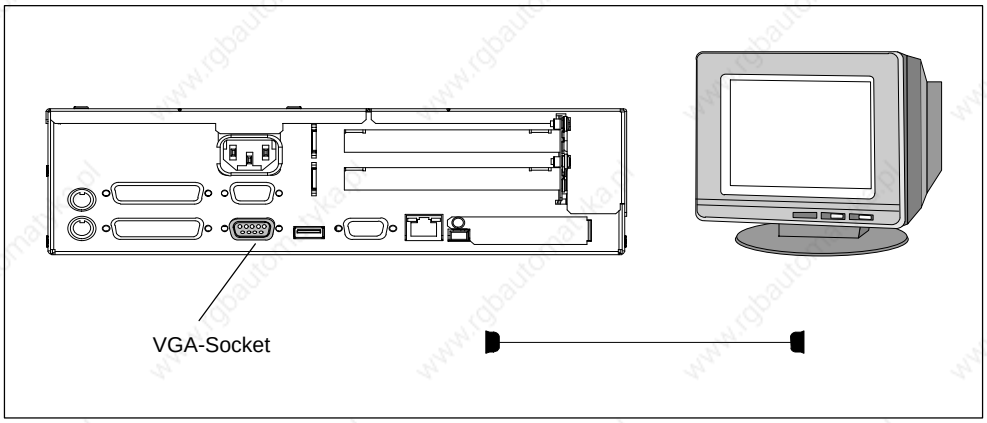

Figure 4-3 Connecting the Monitor

Proceed as follows to connect your monitor:

1. Switch the SIMATIC Box PC 620 and the monitor off.
2. Insert the monitor lead in the VGA socket.
3. Screw down the plug.
4. Connect the monitor cable to the monitor.
5. Switch the PC and the monitor on.
6. Make the necessary changes in the SETUP program (**Menu > Main > Hardware Options** “CRT enabled”, “LCD enabled” “SIMULTAN”)”.

Caution

Danger of damaging the monitor!

If you want to set higher clock frequencies and resolutions, first make sure that the monitor you are using is suitable for a higher clock frequency and resolution.

If the clock frequency is too high, this can cause damage to the monitor.

Using a Mouse

You can connect both a PS/2-USB and a serial mouse to the SIMATIC Box PC 620.

Connecting a PS/2 Mouse

You can connect an external PS/2 mouse or another external pointing device to an additional PS/2-compatible mouse connector.

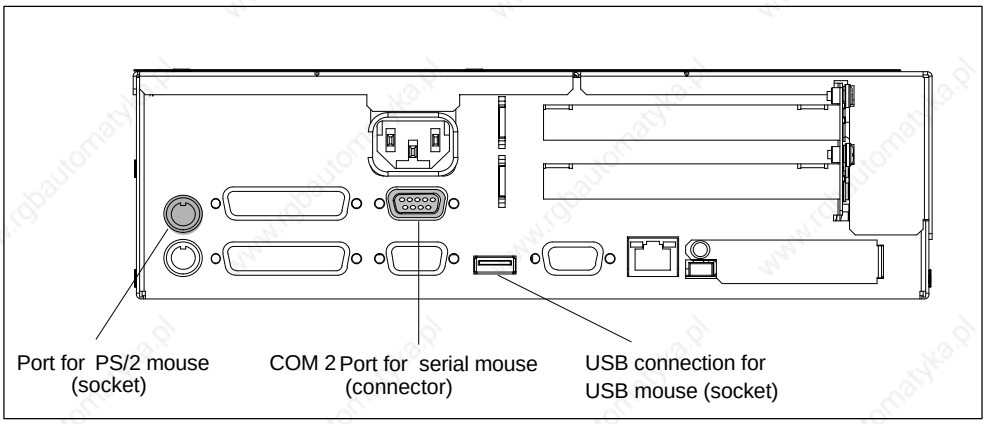

Figure 4-4 Connecting the Mouse

To connect the mouse, proceed as follows:

1. Switch off your PC.
2. Plug the cable of the PS/2 mouse or another external pointing device into the mouse connector.
3. Switch on your PC again.

Connecting a Serial Mouse

You can connect a serial mouse to the COM2 serial port. To operate a serial mouse, the appropriate mouse driver must be initialized and assigned parameters. You will find the information you need to do this in the description of your mouse or in the description of the operating system.

1. Switch off your PC.
2. Plug the serial mouse into the mouse connector labeled COM2.
3. Secure the connector with the screws.
4. Switch on your PC again.

You can find out how to connect a USB mouse in “Connecting USB devices”.

Connecting a PS/2 Keyboard

A PS/2 keyboard of your choice can be connected to the SIMATIC Box PC 620.

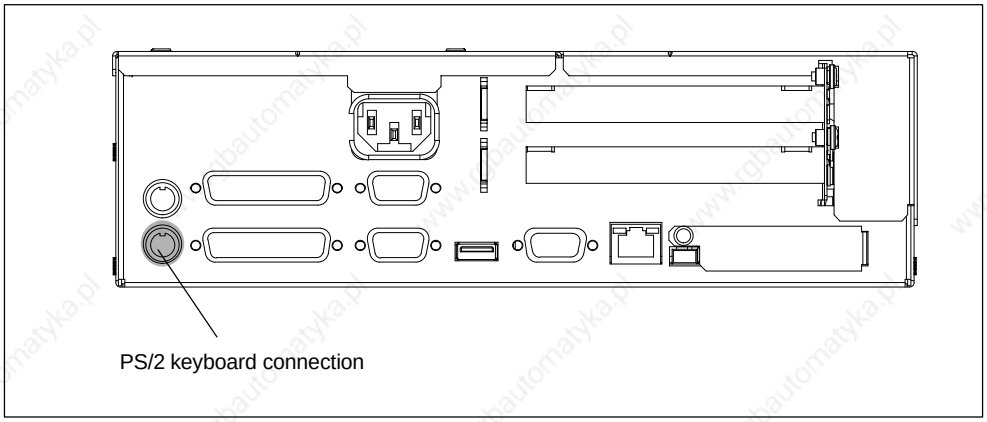

Figure 4-5 Connecting a PS/2 Keyboard

To connect the keyboard, proceed as follows:

1. Switch off your device.
2. Insert the plug of the PS/2 keyboard.
3. Re-start your device.

Note

It is recommended that a keyboard with straight keyboard connector is used, so that the connector does not obscure adjacent ports.

Connecting USB Periphery

You can connect peripheral devices with USB interfaces to the USB port.

- Plug the USB cable into the port.

The device is automatically detected by a Plug and Play operating system, e.g. Windows 98, and is then available.

A USB keyboard can be used to manipulate the BIOS setup.

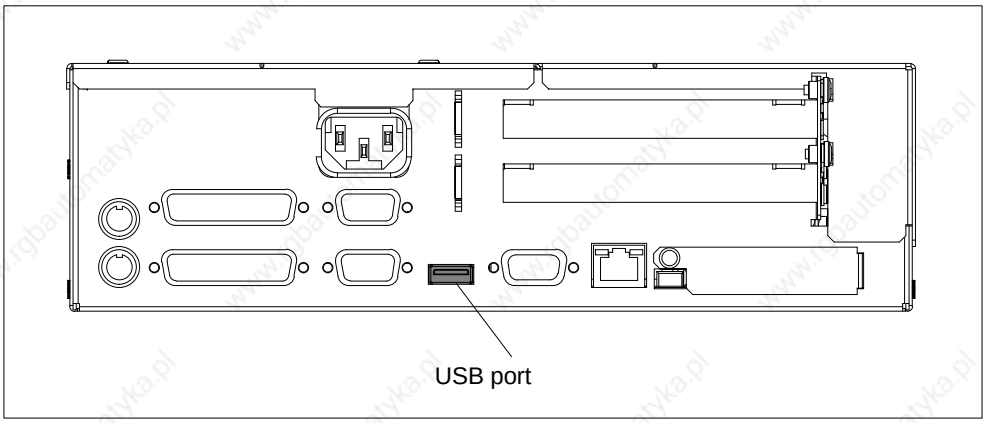

Figure 4-6 USB connection

Note

Operating systems which do not support Plug and Play (e.g. Windows NT 4.0), do not generally allow the operation of USB devices.

4.3 Working with PC Cards

PC Cards

The PC card interface supports Cardbus-Cards (32 Bit) and PCMCIA-Cards (16 Bit). The SIMATIC Box PC 620 has one PC card port. You can plug communication modules for MODEM, FAX-MODEM, ISDN, Token Ring, ETHERNET, memory expansion and SCSI interface modules in credit-card format into these ports.

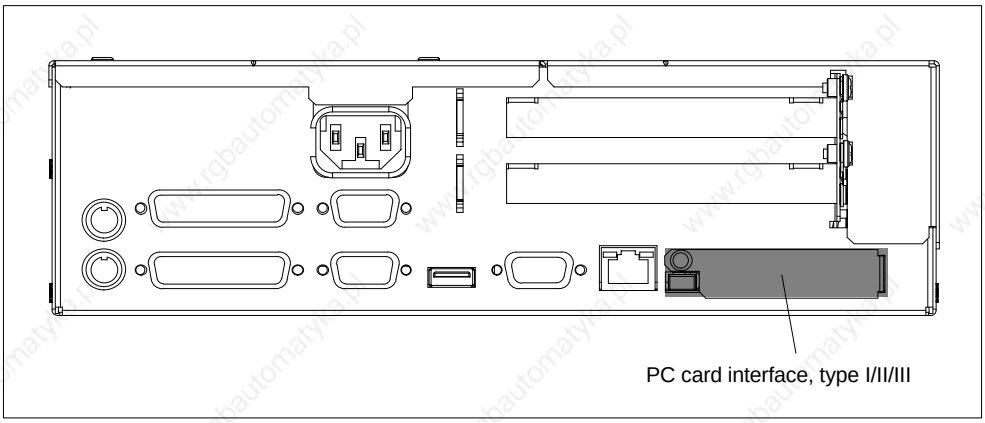

Figure 4-7 PC Card Interface

The following is to be observed when working with cardbus/PC cards:

1. Open the port cover on the left–hand side of the device by undoing the plastic rivet with a flat screwdriver.
2. Pull the cover out of the guide.
3. Insert the desired PCMCIA card or cardbus card.

Caution

Before inserting PC-Cards please make sure that the PC-Card Ejector is completely pressed otherwise the cards e.g. Flash Memory Cards could get stuck in the slot. The PC-Cards cannot be inserted correctly.

Always insert the PC card with the **label** toward the rear of the programming device.

Do not remove the PC card while data transfer is in progress (risk of data loss and system crash).

Caution

Before plugging in or taking out Cardbus/PC cards, you must discharge the electrostatic of your body by briefly touching grounded object (ESD guidelines, Section A.1).

Otherwise faults can occur.

Note

Surge currents of 650 mA at 5 V relating to 3 s are allowable!

Examples of PCMCIA cards connected to PC card interface for

Hard Disk	330 mA *read/write*
(Maxtor MXL-131-III)	640 mA *spin up 2 s*
. . . . .	110 mA *idle*
Fax/modem	60 mA *idle*
(Dr. Neuhaus)	140 mA *transfer*
Ethernet	
(XIRCOM)	150 mA

Installing PC Cards

Note the following when installing these cards:

Note

Depending on the configuration of the SIMATIC Box PC 620, there may not be any free interrupts available for operating PC Cards. You have to reserve the necessary PC card interrupts in the BIOPS setup menu as follows:

Set the necessary interrupt via **Advanced > PCI-Configuration > PCI/PNP ISA IRQ Resource Exclusion** to “reserved” (default: available).

Caution

Risk of damage to PC cards and the SIMATIC Box PC 620!

Always insert PC cards with the front face turned toward the rear of the SIMATIC Box PC 620. The front face generally bears the company and product designation and is labeled ”This side up”, or words to that effect.

You might damage the SIMATIC Box PC 620 and the PC card if you attempt to insert the PC card the wrong way round.

Before inserting the connecting cables, the electrostatic charge in your body, the device and the connecting cables must be brought to the same potential. Briefly touch the sheet metal case to do this.

Note

In order to use a PC card the BIOS-SETUP **Main > Hardware Option** “Cardbus/PCMCIA Slot” has to be set to “Enabled”.

4.4 Connecting the SIMATIC Box PC 620 to other SIMATIC S5

Point-To-Point Connection

In this section, you will learn how to connect your SIMATIC Box PC 620 to a programming device or S5 programmable logic controller using a point-to-point connection.

You can stablish a point-to-point connection by connecting the SIMATIC Box PC 620 to another programming device or a programmable logic controller using

- A V.24 connection
- A TTY connection (not possible for the basic variant of the Box PC)

Configuring Interfaces with Line Current (TTY, 20 mA)

To ensure reliable data transfer, several factors must be taken into account. The maximum data transfer rate (baud rate) depends on the distance, the type of cable, the pin assignment of the interface and external interference.

You can reduce interference by choosing the right transmission cable and connecting it properly, and by observing the following guidelines:

- Use a shielded cable with a low line resistance (130 Ω / km) (about 40 Ω kft) and low capacitance (< 90 pF/m) (about 27 pF/ft). Twisted-pair cables are less susceptible to noise and interference. A low line resistance results in reduced voltage excursions and shorter charge reversal times. The line resistance decreases with increasing conductor cross-section for the same length of cable.
- The shorter the transmission link, the higher the maximum possible data transfer rate.
- If there is an active sender and an active receiver at the same end of the transmission link, the sequence of access priority to the transmission circuit must be taken into account in order to achieve the longest possible transmission link.
- Signal lines and power lines must not run together. Signal lines must be installed as far away as possible from sources of strong interference (for example, 400 V 3-phase power cables).
- The active TTY interface with a 12 V no-load voltage has been tested on a 100 m (1100 ft) long cable at a transmission rate of 9600 bps in an environment with normal levels of noise fieldstrengthV/mor1V/ft).If a shielded 5 x 1 x 0.14shielded cable is used, reliable transmission is possible over a distance of up to 100 m (1100 ft). The AS511 protocol (only one transmitter at a time) was used for testing.

Note

The interference field of the source of interference is reduced by the square of the distance.

Connecting the SIMATIC Box PC 620 to an S5 Programmable Logic Controller

You can connect the SIMATIC Box PC 620 to a SIMATIC S5 programmable logic controller using the COM1/TTY interface port. The cable for connecting to SIMATIC S5 CPUs is supplied with the SIMATIC Box PC 620 (Order no.: 6ES5734-2BD20).

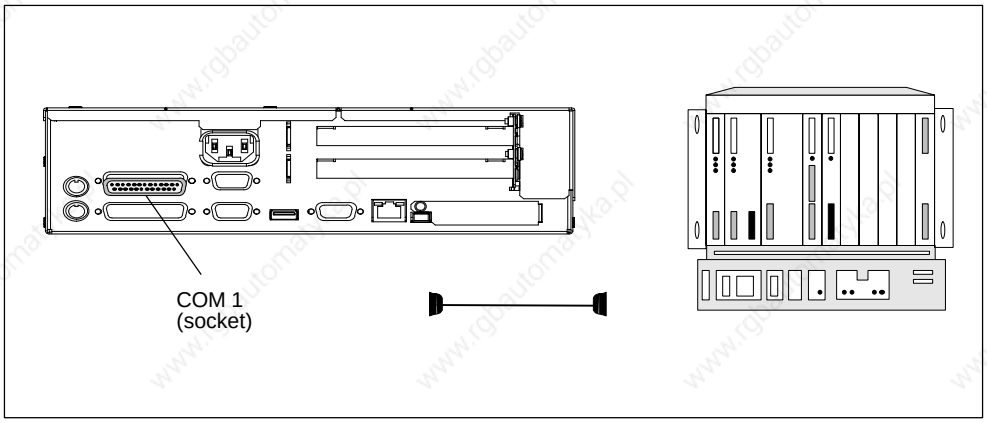

Figure 4-8 Connecting the SIMATIC Box PC 620 to an S5 Programmable Logic Controller

You connect your SIMATIC Box PC 620 to a SIMATIC S5 programmable logic controller as follows:

1. Switch off your device.
2. Insert the connecting cable into the port COM 1 / AG.
3. Screw down the plug.
4. Plug the cable into the corresponding port on the CPU of the programmable logic controller.
5. In order to enable TTY operation, you must set TTY to “enabled” in the BIOS setup.

Caution

Risk of damage to the Simatic Box PC 620!

The interface port may be damaged if you confuse the connections or use the wrong connecting cables.

Make sure the TTY cable of the SIMATIC Box PC 620is plugged into the COM 1 / TTY port and not into the LPT 1 port.

Before inserting the connecting cables, the electrostatic charge in your body, the device and the connecting cables must be brought to the same potential. Briefly touch the sheet metal case to do this.

Use only original cables to stablish the connection to the programmable controller.

Connecting the SIMATIC Box PC 620 via an Adapter

The connecting cable 6ES5 734-2BD20 is supplied with the SIMATIC Box PC 620. An adapter is available for connecting the programmable controller using old standard cables.

Tabelle 4-1 Adapter for SIMATIC Box PC 620 Connection

Interface	Link	Connecting Cable Order no:	Adapter
TTY interface (COM 1)	SIMATIC Box PC 620 to SIMATIC-S5 programmable controller	6ES5 734-2BD20	
		6ES5 731-1xxx0 15–pin	6ES5 731-6AG00
		6ES5 731-0xxx0 25– pin	6ES5 731-6AG00

In order to maintain a data transfer rate of 9600 bps up to a distance of over 1000 m (3300 ft), the receiving diode is connected to ground (reference) via the connecting cable

Note

You can obtain lengths differing from the standard connecting cable (6ES5 734-2BD20) under the order number 6ES5 734-2xxx0, whereby xxx stands for the length code.

SIMATIC Box PC 620 to PG Connection (V.24, TTY)

If you want to connect your SIMATIC Box PC 620 to another programming device, you can plug the appropriate connecting cable into the V.24 or TTY interface port

Tabelle 4-2 Connection of the SIMATIC Box PC 620 to other PUs

Interface	Link	Connecting Cable Order No.:	Adapter
COM 1 as a V.24 port	PG 7xx with PG 7xx	6ES5 733-5BD20[2)]	
COM 1 as a TTY port	PG 7xx with PG 6xx	Series connection of 6ES5 733 -2xxx0[2)] and 6ES5 731-6AG00[1)]	6ES5 731-6AG00

Note

1. When connecting the programming devices in series, make sure you connect the cable the right way around (see Figure 4-9).
2. The connecting cable is available for order only as a spare part. The connecting cable is described in Chapter 8.

Figure 4-9 Direction of Connection: Adapter – Connecting Cable

Note

For the PC/PU connection, you must switch the TTY ports (COM 1) in one of the programmable logic controllers to passive by changing the jumper setting. When the SIMATIC Box PC 620 leaves the factory, this interface is always set to active!

Switching the SIMATIC Box PC 620 to Active/Passive

When your SIMATIC Box PC 620 is supplied, the COM1 (TTY) serial port is active (20 mA current loop). When you connect two programming devices using the COM1 (TTY) serial port, you must deactivate the port on one of these devices. In the SIMATIC Box PC 620, the switch for this is located on the motherboard.

These jumpers are accessible if you open the battery compartment cover.

Jumper Settings

Change the jumper settings as shown in Figure 4-10.

S1-1	S1-2	Function
on	**on**	Active TTY port (default setting)
on	off	TTY loop transmit separated from power source (passive setting)
off	on	TTY loop receive separated from power source (passive setting)

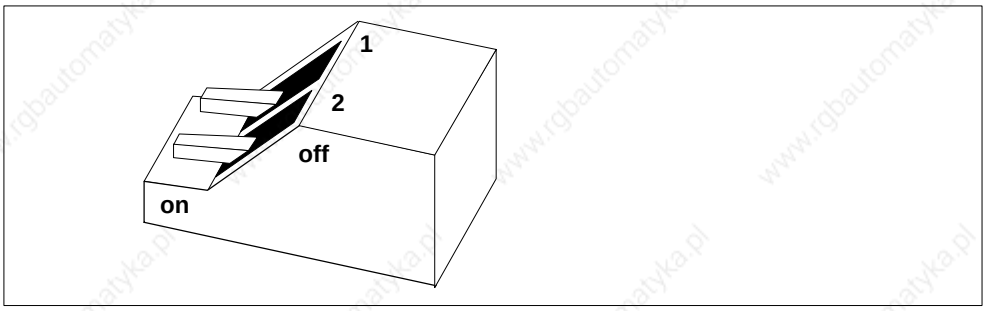

Figure 4-10 Jumper Setting TTY Port Active

Changing the Jumper Setting

Proceed as follows to switch the SIMATIC Box PC 620 to passive:

1. Switch off your device.
2. Open the cover of the module.
3. Place the two jumpers in the “open” position (see Fig. 1-10).
4. Close the cover of the module.

4.5 Connecting the SIMATIC Box PC 620 to a SIMATIC S7 Network (MPI/DP)

Connecting an S7 Programmable Controller via MPI/DP Interface

You can connect the SIMATIC Box PC 620 to a SIMATIC S7 automation system or to a PROFIBUS network via the potentially isolated*) MPI/DP port**) .
The MPI cable (5m) for connection to SIMATIC S7 CPUs (order no.: 6ES7901-0BF00-0AA0) is supplied with the SIMATIC Box PC 620. Only transfer rates of up to 187.5 kBit/s are possible with this cable connection. The 12 Mbit/s PROFIBUS connecting cable is required for baud rates from 1.5 Mbit/s (order no. 6ES7901-4BD00-0XA0).

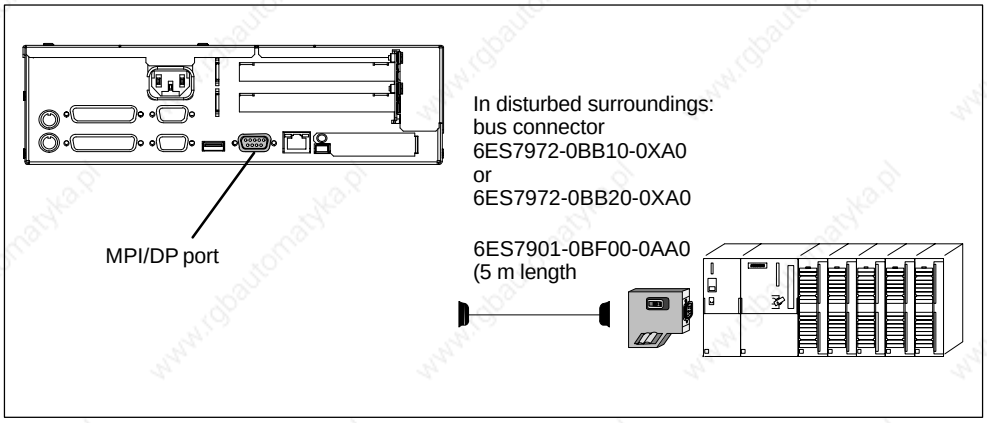

Figure 4-11 Connection Using the MPI/DP Interface

Proceed as follows when connecting to a SIMATIC S7 programmable logic controller:

1. Switch off your device.
2. Connect the cable to the MPI/DP interface.

Caution

Risk of damage to the SIMATIC Box PC 620!

Before plugging in the cables, the static charge on your body, the unit, and the cables must be equalized. You can do this by briefly touching the metal mounting plate for the interfaces on the left-hand side panel.

* Electrical isolation in the saftey extra-low voltage circuit (SELV circuit).
** Not available for the basic variant of the Box PC.

Connecting

Via the MPI/DP interface, you can connect your PC to

- MPI networks (S7-200, S7-300, and S7-400) or
- PROFIBUS DP networks (DP components).

MPI/PROFIBUS Network

Up to 32 devices (PC, programming device, or programmable controller) can be connected to the MPI/DP interface to form a network segment. The physical connection to the MPI/PROFIBUS DP network is via a floating RS485 interface which is a component of the PC basic module.

Several MPI/PROFIBUS DP network segments can be connected via repeaters. The complete MPI/PROFIBUS DP network can comprise up to 127 stations. Data transmission rates from 9.6 Kbps to 12 Mbps are possible in the PROFIBUS DP MPI network.

Note

You will find more information on setting up an MPI/DP network in the manual ”PROFIBUS Networks” Order No.: 6GK 1970-5CA10-0AA0 or in SIMATIC NET.

4.6 Networking the SIMATIC Box PC 620 with Other Stations on PROFIBUS

Networking the SIMATIC Box PC 620 on PROFIBUS

PROFIBUS is an open and robust bus system for industrial use. It can be used to configure networks with up to 32 stations per segment. PROFIBUS-DP supports data-transfer rates from 9.6 Kbaud to 12 Mbaud.

How the Network Functions

The network operates on the master-slave principle with token passing (complying with DIN19245, PROFIBUS). It distinguishes between active and passive stations. An active station receives the token and passes it on to the next station within a specified time.

Hardware Requirements

Using the following components, for example, you can connect or network the SIMATIC Box PC 620 with PROFIBUS:

- RS 485 MPI/DP interface adapter (not available for the basic variant of the Box PC)
- Shielded, twisted pair (bus cable or connecting cable to network).

Note

You will find more detailed information about the SIMATIC Net PC cards in the SIMATIC NET Catalog IK 10.

4.7 Networking the SIMATIC Box PC 620 and Other Computers on Industrial Ethernet

Networking the SIMATIC Box PC 620 on Industrial Ethernet

Industrial Ethernet is a bus system for industrial use based on Ethernet (ISO 8802/3). The main features of Industrial Ethernet are:

speed (10 Mbps), simple expansion, open communication, and widespread application.

How the Network Functions

Industrial Ethernet is the name of Siemens networks and network components operating according to the CSMA / CD (Ethernet) principle. Industrial Ethernet is a bus-type LAN that uses a triaxial cable (H1) as its transmission medium.

Note

You will find more detailed information about the SIMATIC Net PC cards in the SIMATIC NET Catalog IK 10.

4.8 Connection under Windows

Windows supports point-to-point connections via the LPT or COM port. The connecting cables are standard, commercially available products. More information is available in the Networks section of the Windows description and in the online Help system under “Connection to Another Computer”.

SIMATIC Box PC 620 Expansions

5

What Does This Chapter Contain?

You can enhance the performance of your SIMATIC Box PC 620 by adding additional memory. This chapter describes how to expand your SIMATIC Box PC 620. Please observe the relevant safety guidelines.

Chapter Overview

In chapter	you will find	on page
5.1	Opening the Unit	5-2
5.2	Installation of a Memory Extension	5-5
5.3	Replacing the Backup Battery	5-6
5.4	Installation of Expansion Cards	5-13
5.5	Removal and Installation of Drives	5-18
5.6	Removal and Installation of the Power Supply Unit	5-23
5.7	Removal and Installation of the Bus Board	5-24
5.8	Removal and Installation of the Fan	5-26
5.9	Processor upgrade	5-27
5.10	Switch Adjustment / Jumpers	5-28
5.11	Reset Button	5-29

5.1 Opening the Unit

5.1.1 Prerequisites

The device is designed for easy maintenance so that any work that is necessary can be done quickly and at low cost.

Caution

The electronic components on the printed circuit boards are extremely sensitive to electrostatic discharge. Certain precautionary measures are therefore necessary when handling such components. These measures are explained in the guidelines for handling electrostatically sensitive devices at the end of this manual.

Limitation of Liability

All technical specifications and licences apply only to expansion functions approved by SIEMENS.

No liability can be accepted for impairment of functions caused by the use of devices and components of other manufacturers.

All the modules and components in the SIMATIC Box PC 620 are electrostatically sensitive. Please read the ESD guidelines at the end of this book carefully. The following symbol warns that electrostatically-sensitive modules are present.

Before Opening the Unit

Note the following rules before opening the unit:

- Before you disconnect the power supply cable, discharge any electrostatic charge on your body. You can do this by touching the metal mounting plate for the interfaces on the left-hand side panel of the unit.
- Discharge any electrostatic charge from tools that you are using.
- Wear a grounding wrist-strap if you are handling components.
- Leave components and modules in their packing until you are ready to install them.
- Disconnect the SIMATIC Box PC 620 from its power supply and remove the battery before plugging in or removing any modules or components.
- Touch components and modules only on their edges. Above all, do not touch the connecting pins and printed conductors.
- Never operate the SIMATIC Box PC 620 with the cover open.

Tools

You can carry out all necessary installation work on the SIMATIC box PC 620 with screwdrivers of the type TORX T10 and TORX T8.

5.1.2 Opening the SIMATIC BOX PC 620

To open the SIMATIC Box PC 620, proceed as follows:

1. Switch off the SIMATIC Box PC 620, pull out the power supply connector, and remove all connecting cables from the unit, including the keyboard cable.
2. Remove the PC from its mounting/cabinet (only necessary if screws which have to be removed are inaccessible in the fitted position).
3. Undo the two screws (see fig. 5-1) on the housing cover.
4. Raise the cover slightly.
5. Then you can remove the housing cover.

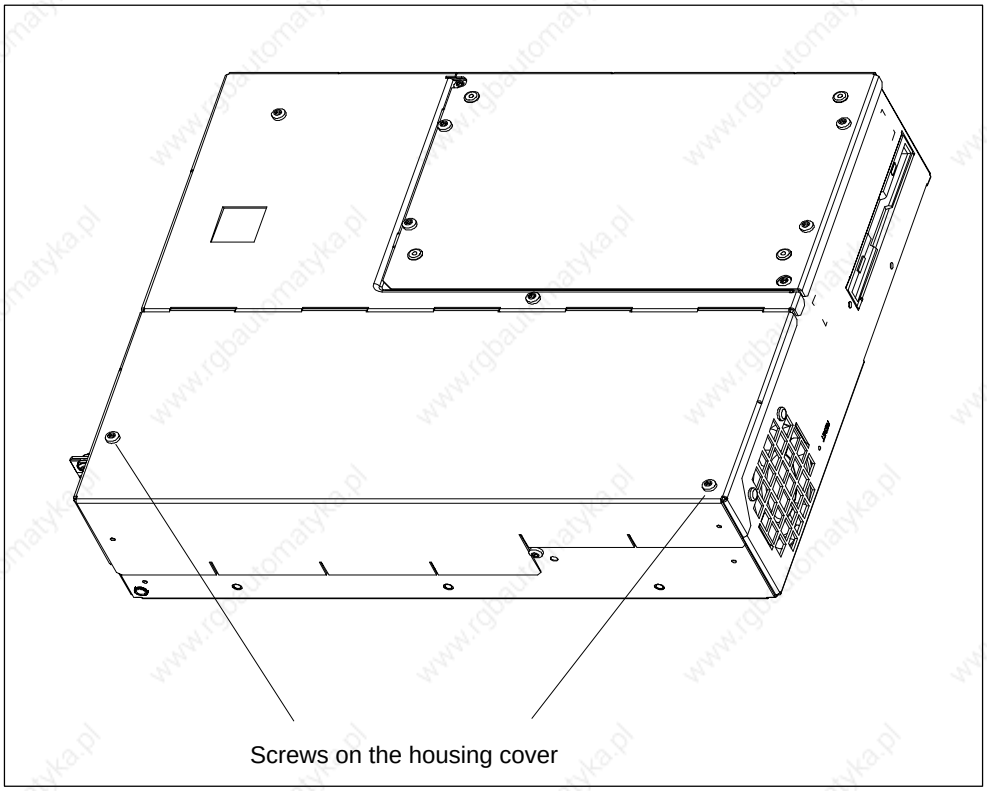

Figure 5-1 SIMATIC Box PC 620 Prepared for Opening

5.1.3 Components Visible After Opening the Unit

Components

Once you have removed the top cover of your unit, the components are visible.

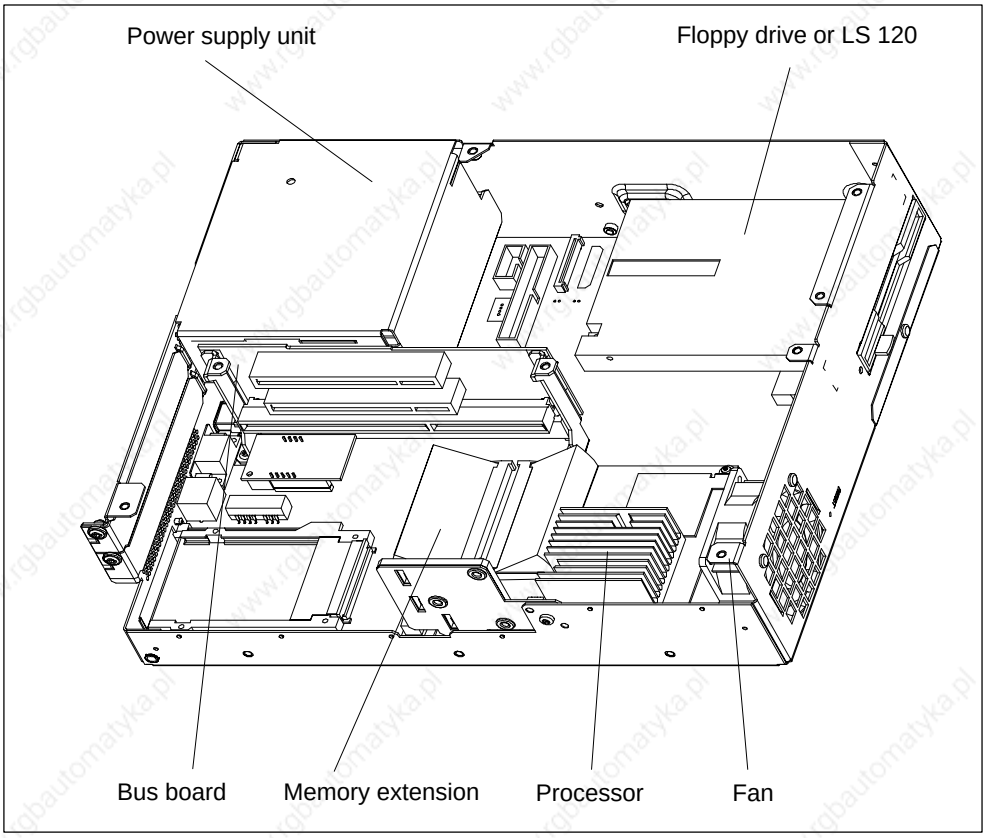

Figure 5-2 SIMATIC Box PC 620 Open

5.1.4 Block Diagram of the Motherboard

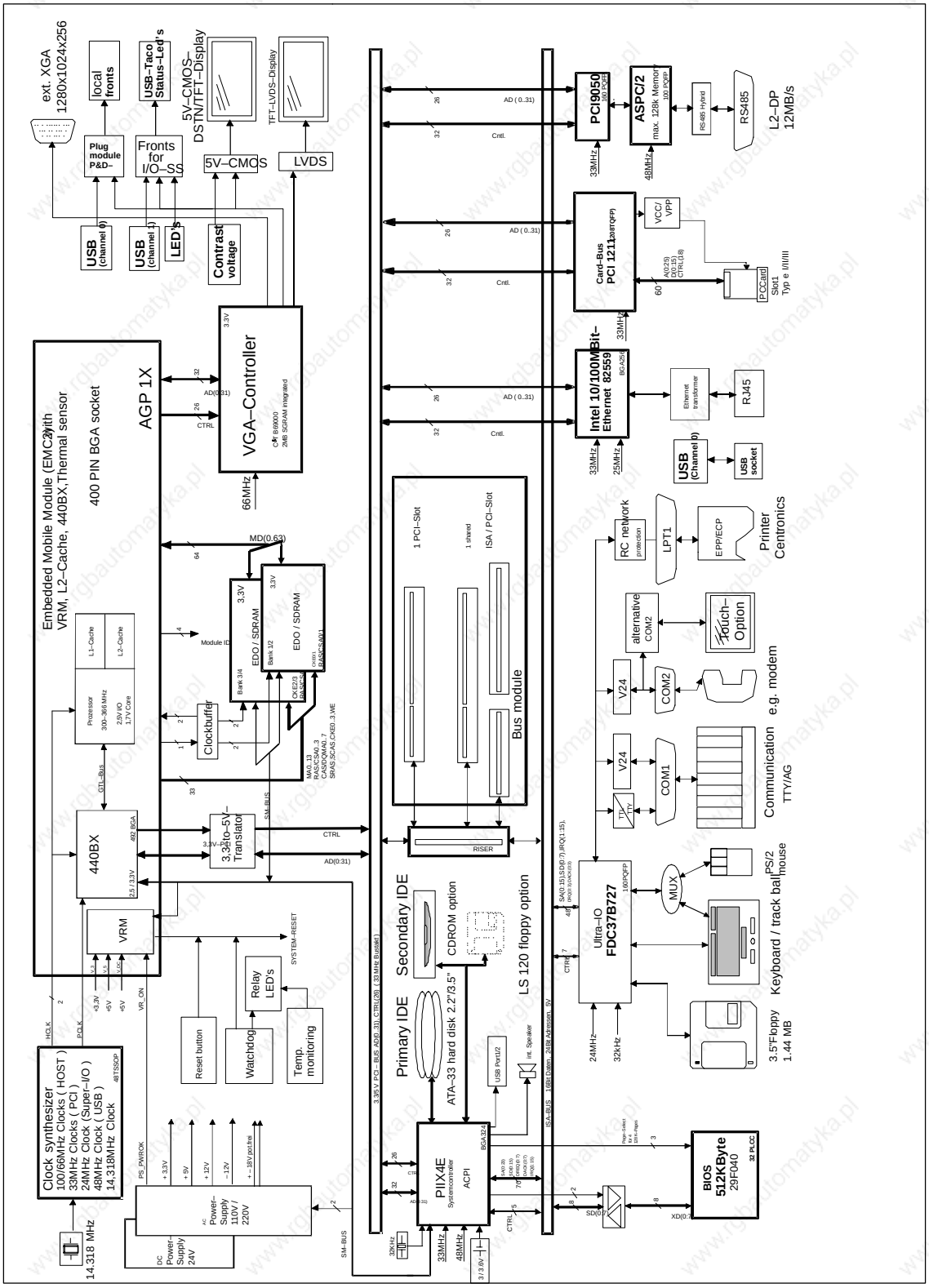

Figure 5-3 Block Diagram, SIMATIC Box PC 620

5.1.5 The Motherboard

The motherboard is the heart of the SIMATIC Box PC 620. Here, data is processed and stored, and interfaces and device I/Os are controlled and managed.

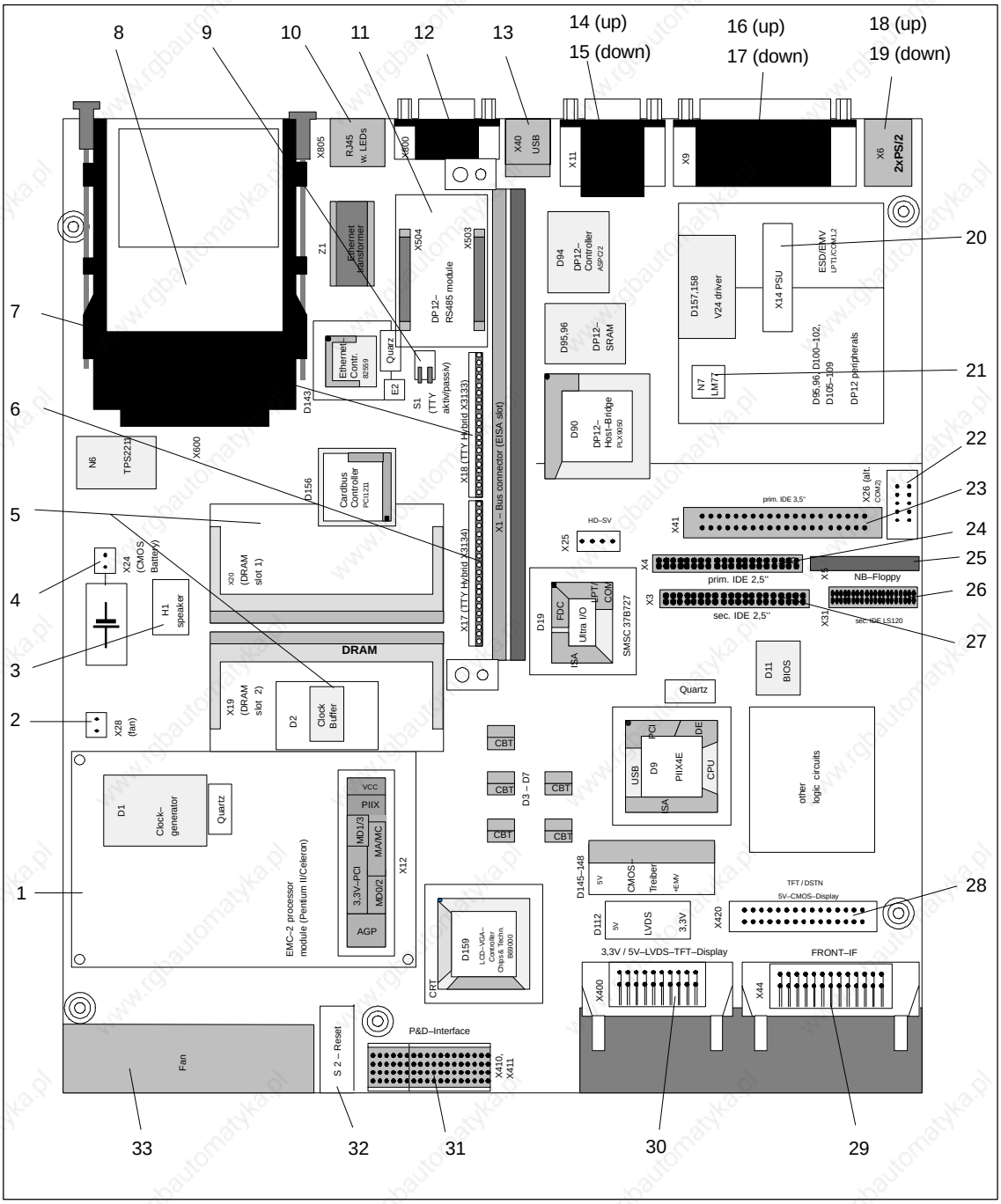

Figure 5-4 Motherboard

Components on the Motherboard

The following components are located on the motherboard of the SIMATIC Box PC 620:

Serial Number	Functions
1	Processor module with heat sink
2	Connector for fan
3	Loudspeaker
4	Connector for clock battery
5	System memory, 2 slots
6	TTY transmitter *1
7	TTY receiver*1
8	PC card slots
9	DIP switch TTY active/passive*1
10	RJ45 socket for ethernet LAN
11	DP12 RS485 module*1
12	MPI/DP port
13	USB bus connector
14	Serial port COM 2,
15	Socket for VGA monitor
16	Serial port COM 1/TTY
17	Parallel port LPT 1
18	PS/2 mouse connection
19	PS/2 keyboard connection
20	Connection to power supply (power supply unit)
21	Temperature sensor
22	Connector alternative
23	IDE connector for 3.5 “ hard disk
24	IDE connector for 2.5 “ hard disk
25	Floppy drive connector
26	IDE connector for LS 120
27	IDE connector for CD-ROM
28	Connector for 5 V CMOS display
29	Connector for front interface
30	Connector for LVDS display (3.3 V/5 V)
31	Slot for P&D interface module
32	Button for hardware reset
33	Fan

*1 Not available for the basic variant of the Box PC.

5.2 Installing Memory Expansion Submodules

Standard Memory

The motherboard has 2 slots for 144 pin SO DIMM memory submodules. This allows you to expand the memory capacity of your SIMATIC Box PC 620 to a maximum of 512 Mbytes.

Either one or two modules can be installed.

Memory	Modules		
	64 Mbytes	**128 Mbytes**	**256 Mbytes**
64 Mbytes	1	–	–
128 Mbytes	2	–	–
128 Mbytes	–	1	–
192 Mbytes	1	1	–
256 Mbytes	–	–	1
256 Mbytes	–	2	–
384 Mbytes	–	1	1
512 Mbytes	–	1	–

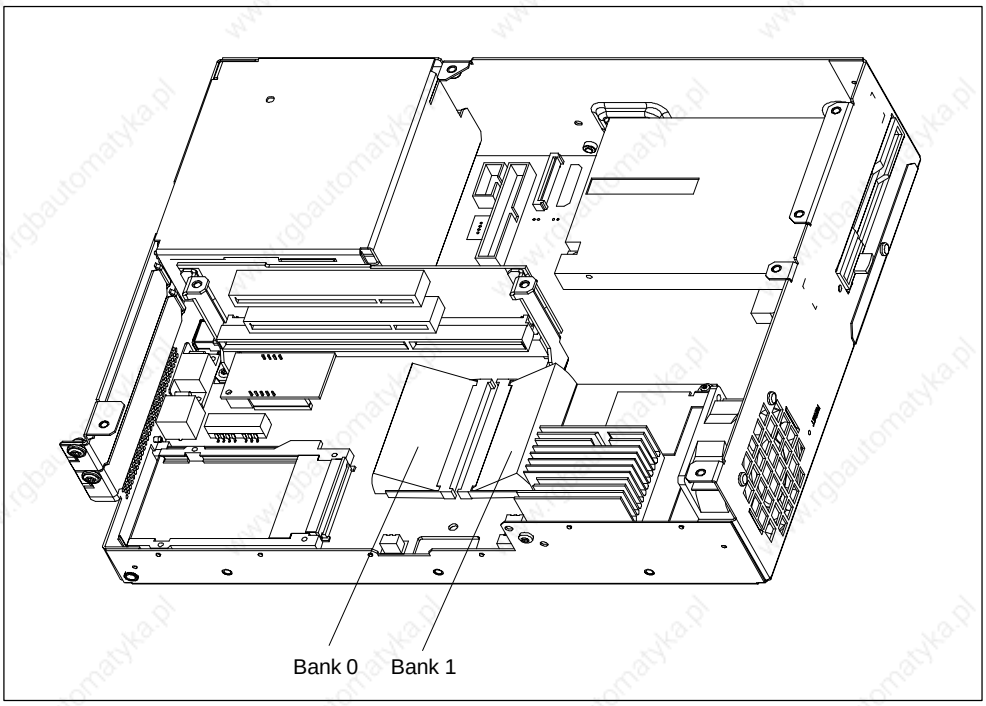

Figure 5-5 Position of the SO DIMM Memory modules

Caution

The electronic components of the printed circuit boards are extremely sensitive to electrostatic discharge. Certain precautionary measures are therefore necessary when handling such components. These measures are explained in the guidelines for handling electrostatically sensitive devices at the end of this manual.

Installing the SO DIMM Cards

To plug in expansion submodules, proceed as follows:

1. Open the unit as described in Section 5.1.
2. Plug the cards into the slots. Note the safety recess on the connector side of the SO DIMM card.
3. Push the card down applying light pressure until it locks into place.
4. Close the unit.

Caution

Risk of damage!

Make sure that the cards sit securely in the slots, otherwise they can fall out and be damaged.

Installation

The memory configuration is detected automatically. When you switch on the unit, the distribution of base and extended memory is displayed on the screen.

5.3 Replacing the Backup Battery

Battery Power Supply for Real-Time Clock and Configuration

A backup battery (3.6 V-lithium battery) powers the the real-time clock even after the SIMATIC Box PC 620 is switched off. In addition to the time of day, all the information about the SIMATIC Box PC 620 (device configuration) is stored in RAM. If the backup battery fails or is removed, all these data are lost.

The clock uses very little power and the lithium battery has a high capacity so that the battery can provide backup power for the real-time clock for many years and seldom needs to be replaced.

Battery Voltage too Low

If the battery voltage is too low, the time is lost, and a correct configuration of the device can no longer be guaranteed.

Replacing tthe Battery

In this case, you must replace the backup battery. The battery is on the motherboard.

To change the battery, proceed as follows:

1. Switch off your SIMATIC Box PC 620 and remove the power cable and all the connecting cables.
2. Open the unit as described in Section 5.1.
3. Change the backup battery inserted in the motherboard by pulling out the connector and undoing the cable tie.
4. Secure the new battery in its mounting with a cable tie.
5. Insert the battery connector in the motherboard.
6. Close the unit.

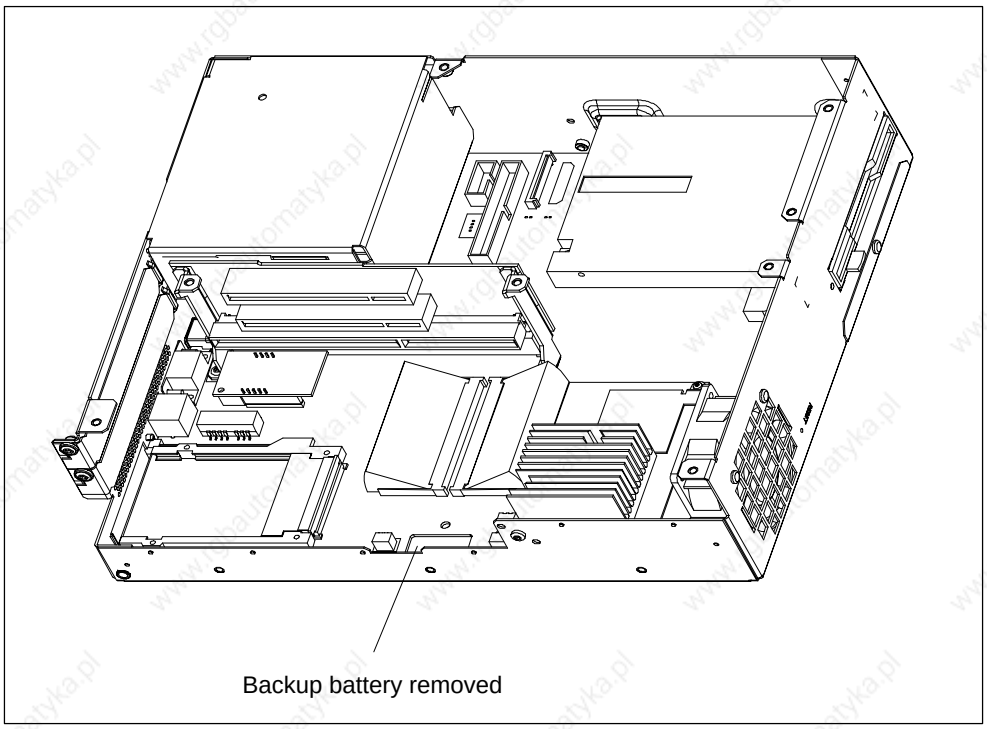

Figure 5-6 Position of the Backup Battery

Caution

Risk of damage!

Only replace the lithium battery with an identical battery or with a type recommended by the manufacturer (Order No.: W79084-E1003-B1).

Dispose of used batteries in keeping with local regulations.

Changing SETUP

If you change the battery or unplug the battery connector you must run the SETUP program to reset your programming device's configuration data (see Chapter 6).

5.4 Installation of Expansion Cards

Notes about the Cards

The SIMATIC Box PC 620 is designed for the use with cards as per the AT/PCI specification.The dimensions of the cards may not exceed the stated dimensions. If the height is exceeded, contact problems, malfunctions and difficulties with the assembly cannot be excluded. The illustrations show cards with a full AT/PCI overall length. Depending on the slot, there may be restrictions on the overall length.

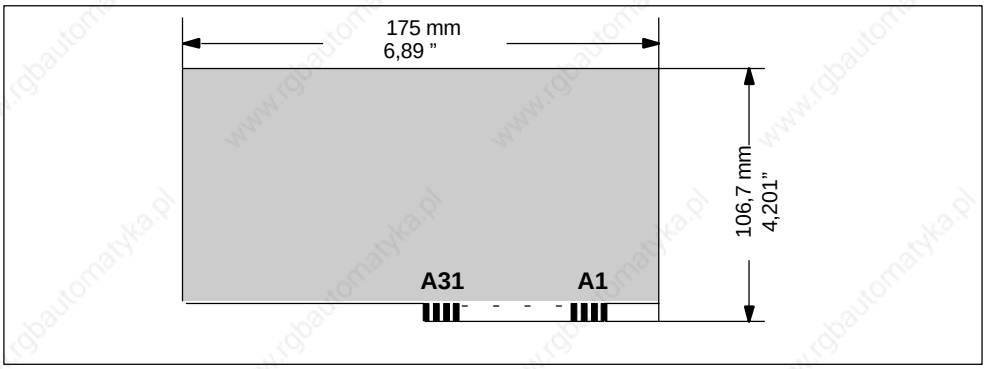

Figure 5-7 XT Card

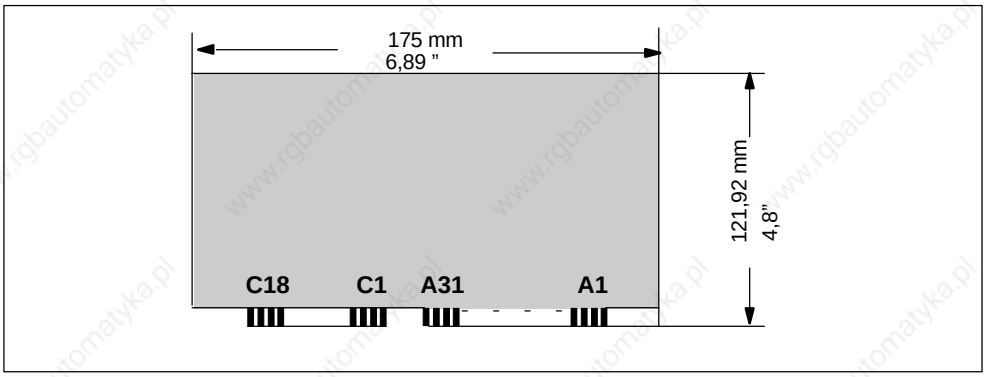

Figure 5-8 AT Card

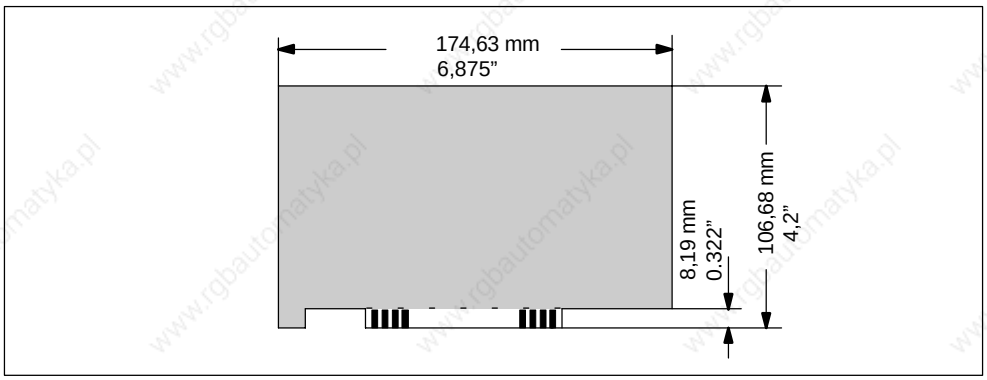

Figure 5-9 Short PCI Cards (5 V)

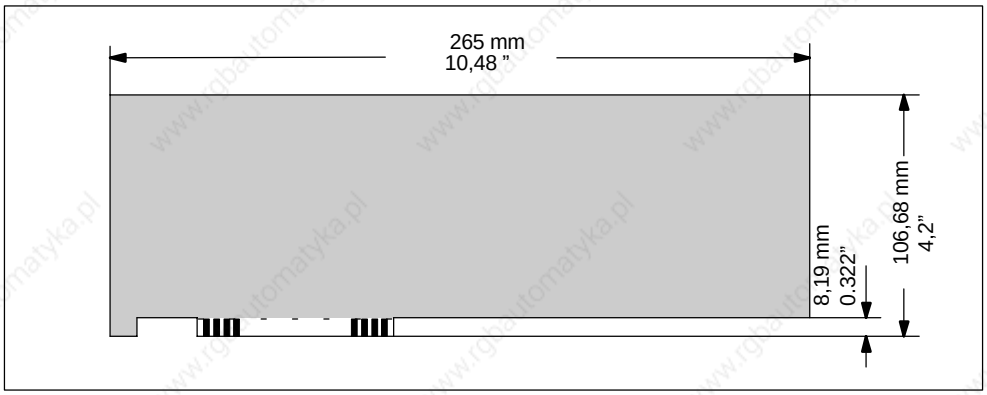

Figure 5-10 Long PCI Cards (5 V)

Note about Long PCI Cards

Before long PCI cards can be inserted into the guides of the fan trough, they must be fitted with a so-called extender (this should form part of the scope of supply of long PCI boards). Long PCI cards can be inserted into the guides of ISA modules by means of this extender.

5.4.1 Removal and Installation of the Device for Holding Down the modules

The device for holding down the modules is attached to the housing with a screw. It has three slits, through which the slide elements are inserted.

Proceed as follows:

1. Open the housing as described in Section 5.1.
2. Undo the fixing screw of the device for holding down the modules.
3. During assembly, ensure that the device for holding down the modules is resting on the guide on the housing.

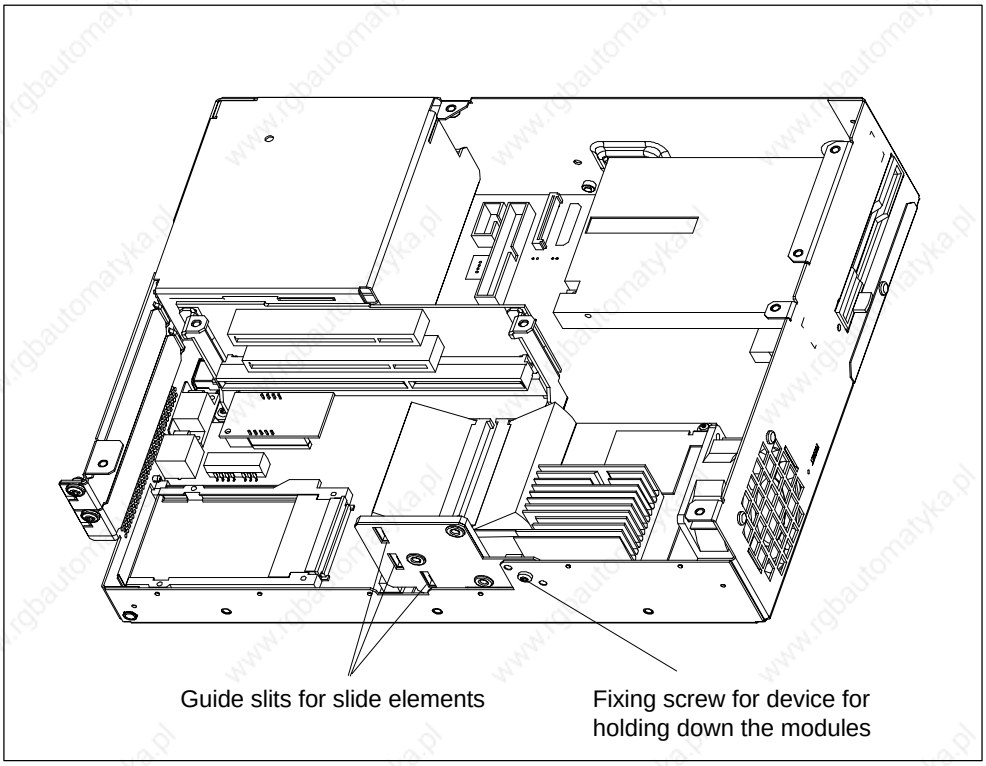

Figure 5-11 Removal/Installation of an Expansion Card

Note

The slide elements are in the enclosed plastic bag.

Aligning the Holding-Down Device

Proceed as follows to install the holding-down device.

1. Insert the slide element through the guide slit until it is resting firmly on the module. The module must now be introduced into the notch.

Caution

No pressure may be exerted on the module! Therefore, do not use force to press the slide element onto the module.

2. Cut off the projecting part of the slide element:
   - Score the slide element at the top edge of the holding-down device with a knife and break it off.
   - Nip off the surplus with a sharp side cutter.

5.4.2 Removal and Installation of an Expansion Card

Proceed as follows:

1. Open the housing as described in Section 5.1.
2. Remove all connectors from the expansion card and note the assignment.
3. Remove the device for holding down the modules as described in Section 5.4.1.
4. Undo the screw on the slot plate of the module.
5. Pull the module out of the slot.
6. Proceed in the reverse order to install the new expansion card.

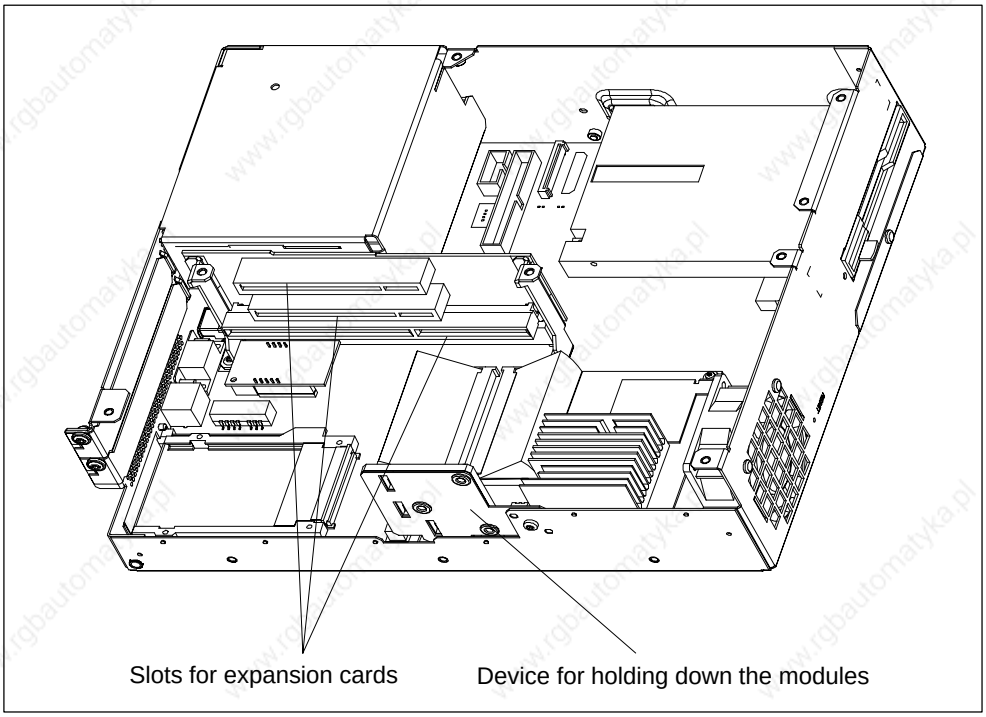

Figure 5-12 Removal/Installation of an Expansion Card

5.5 Removal and Installation of Drives

5.5.1 Removal and Installation of the Hard Disk Drive

1. Undo the 4 screws on the back of the housing.
2. Open the drive holder.
3. Detach the drive holder from the mounting and lay the drive holder with its top on the housing.
4. Note the cable assignment and pull off the cables.
5. Undo the four screws which secure the hard disk drive to the vibration-damped part of the mounting. Remove the hard disk drive from the mounting.
6. Proceed in the reverse order to fit the new drive. The new drive must be of the same type as the one removed.

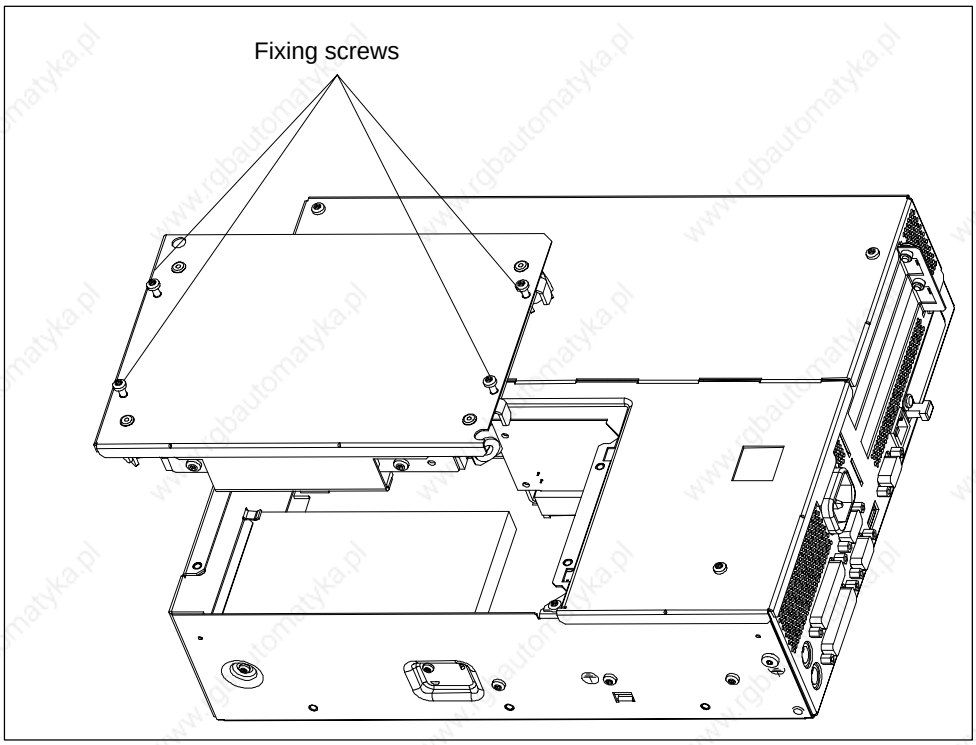

Figure 5-13 Installation and Removal of the Drive Holder

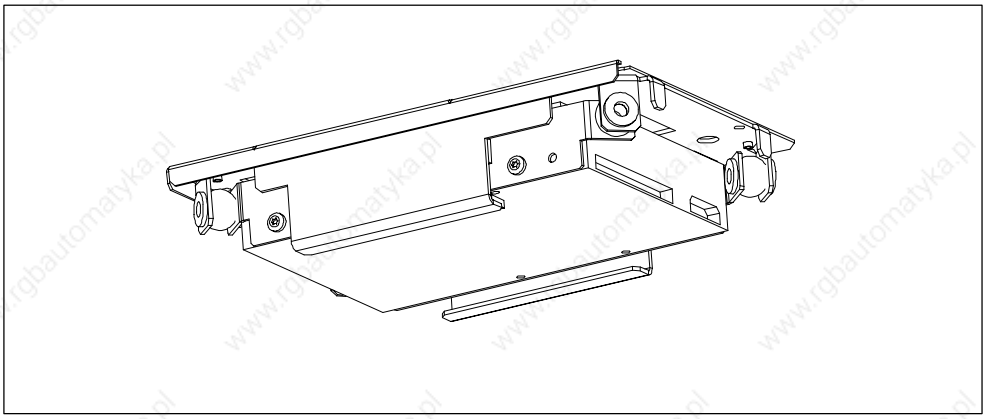

Figure 5-14 Hard Disk Drive with Holder Removed

5.5.2 Removal and Installation of a CD-ROM Drive

Depending on the device equipment, a CD-ROM drive is installed in the SIMATIC Box PC 620.

1. Undo the 2 screws on the back of the housing.
2. Remove the cover of the CD-ROM drive.
3. Undo the three screws which secure the CD-ROM drive to the mounting.
4. Remove the CD-ROM drive from the mounting and carefully pull off the data cable.
5. Proceed in the reverse order to fit the new drive.

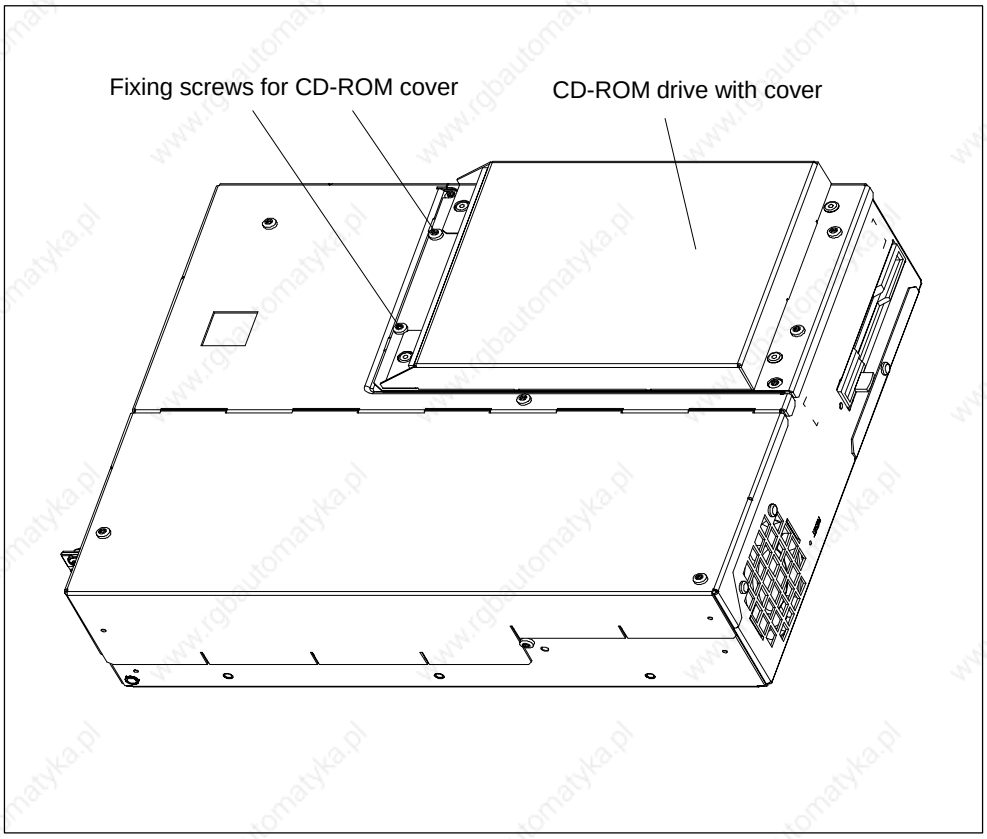

Figure 5-15 SIMATIC Box PC 620 with CD-ROM Drive

5.5.3 Removal and Installation of the Floppy Drive

1. Open the housing as described in Section 5.1.
2. Remove the drive holder as described in Section 5.5.1.
3. Release the interlock of the controller flex-lead on the motherboard and pull the flex-lead out of the connector assembly.
4. Undo the two fixing screws (TORX T8) on the housing.
5. Lift the floppy drive upwards out of the housing.
6. Proceed in the reverse order to fit the new drive. The new drive must be of the same type as the one removed.

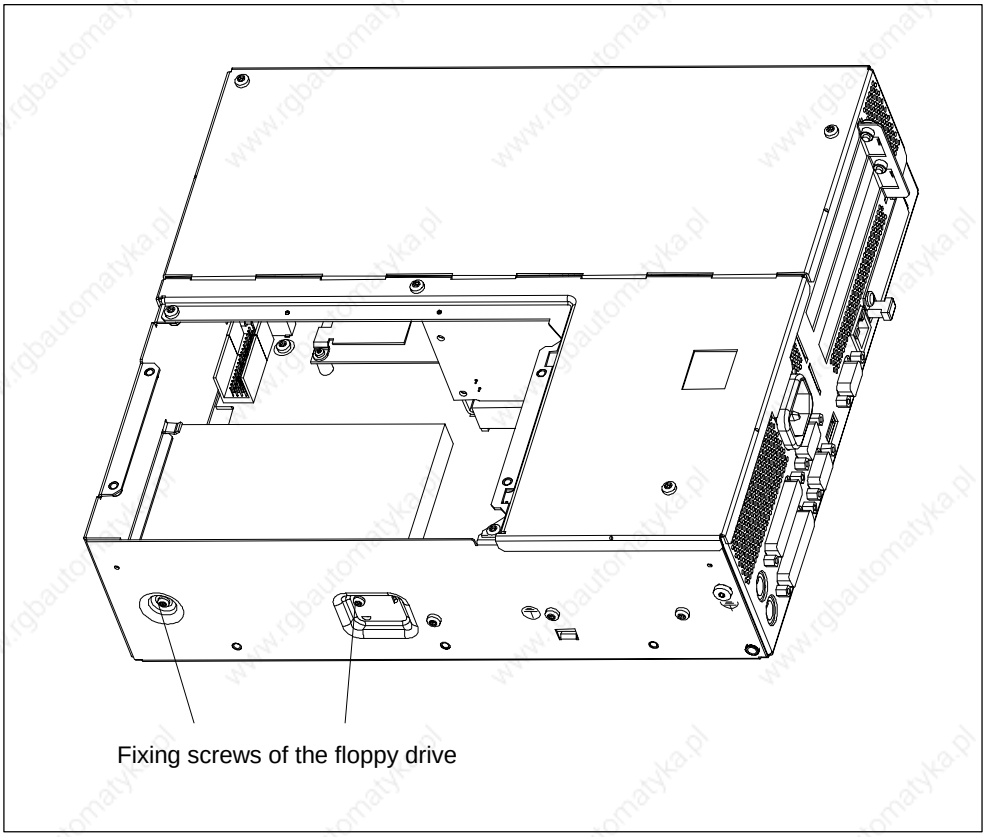

Figure 5-16 Installation of the Floppy Disk Drive in the SIMATIC Box PC 620

5.5.4 Removal and Installation of the LS 120 Drive

The removal and installation of the LS120 drive takes place with the same steps as for the floppy drive.

1. Open the housing as described in Section 5.1.
2. Remove the drive holder as described in Section 5.5.1.
3. Release the cable clamp assembly of the controller flex-lead on the motherboard and pull the flex-lead out of the connector assembly.
4. Undo the two fixing screws (TORX T8) on the housing.
5. Lift the LS 120 drive upwards out of the housing.
6. Proceed in the reverse order to fit the new drive.

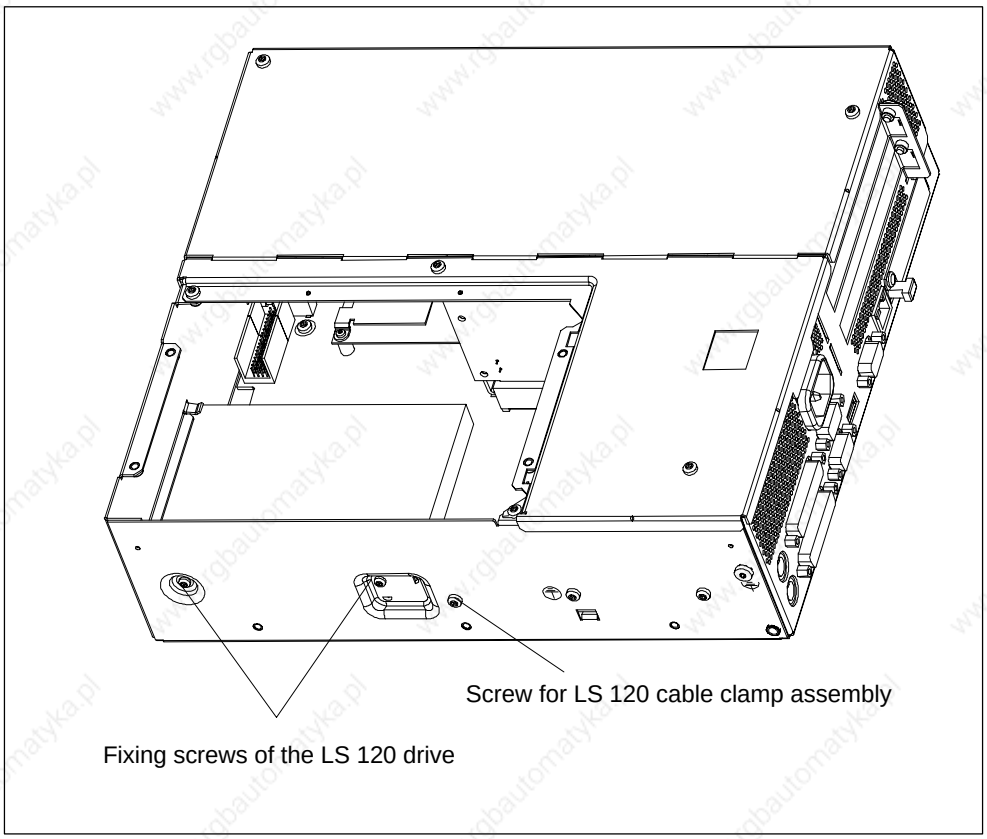

Figure 5-17 Installation of the LS 120 Drive

5.6 Removal and Installation of the Power Supply Unit

1. Open the system housing as described in Section 5.1.
2. Remove the drive holder as described in Section 5.5.1.
3. Undo and remove the 3 screws of the cover of the power supply unit from the housing.
4. Undo the two fixing screws (TORX T10) on the housing.
5. Pull the power supply unit upwards out of the housing.
6. Proceed in the reverse order to fit the new power supply unit.

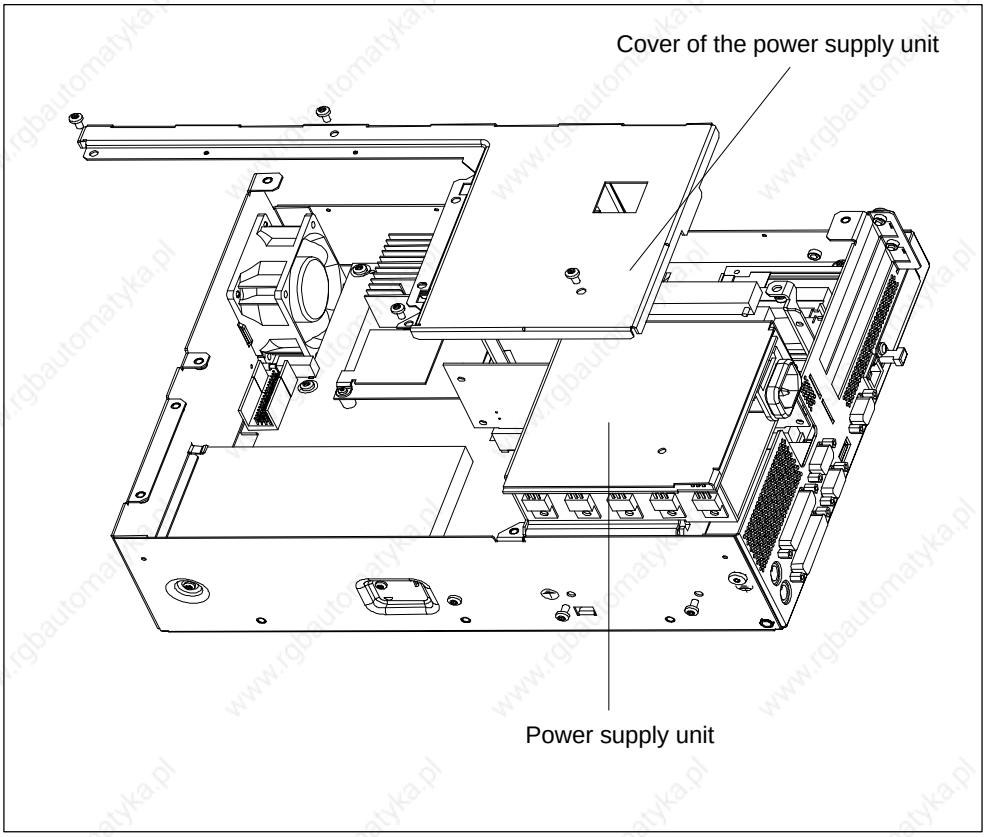

Figure 5-18 Removal and Installation of the Power Supply Unit

5.7 Removal and Installation of the Bus Board

1. Open the housing as described in Section 5.1.
2. Remove all the modules from the slots (proceed as described in Section 5.4.2.).
3. Remove the drive holder as described in Section 5.5.1.
4. Remove the power supply unit as described in Section 5.6.
5. Undo the screw on the motherboard.
6. Pull the bus board off the motherboard.
7. Proceed in the reverse order to refit the bus board.

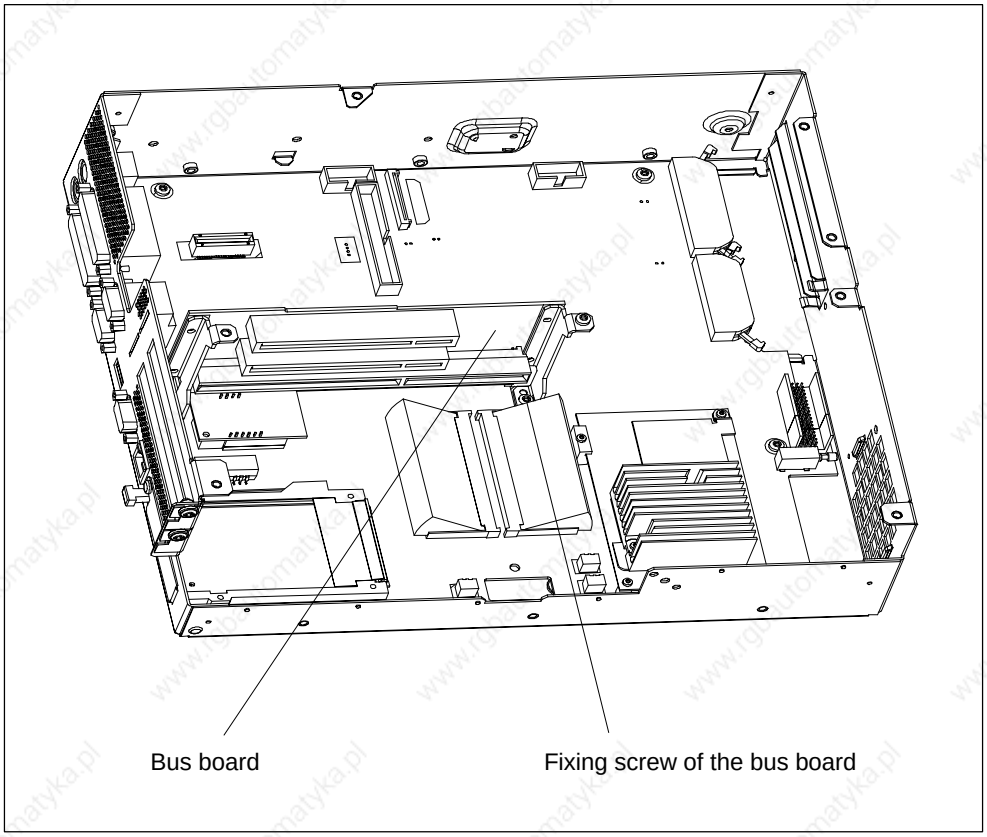

Figure 5-19 Removal and Installation of the Bus Board

5.7.1 Removal and Installation of the Motherboard

1. Open the housing as described in Section 5.1.
2. Remove all the modules from the slots (proceed as described in Section 5.4.2).
3. Remove the drive holder as described in Section 5.5.1.
4. Remove the power supply unit as described in Section 5.6.
5. Undo the 7 screws on the motherboard and the 10 hexagon head screws on the ports.
6. Remove the bus board and the motherboard.
7. Proceed in the reverse order to refit the motherboard.

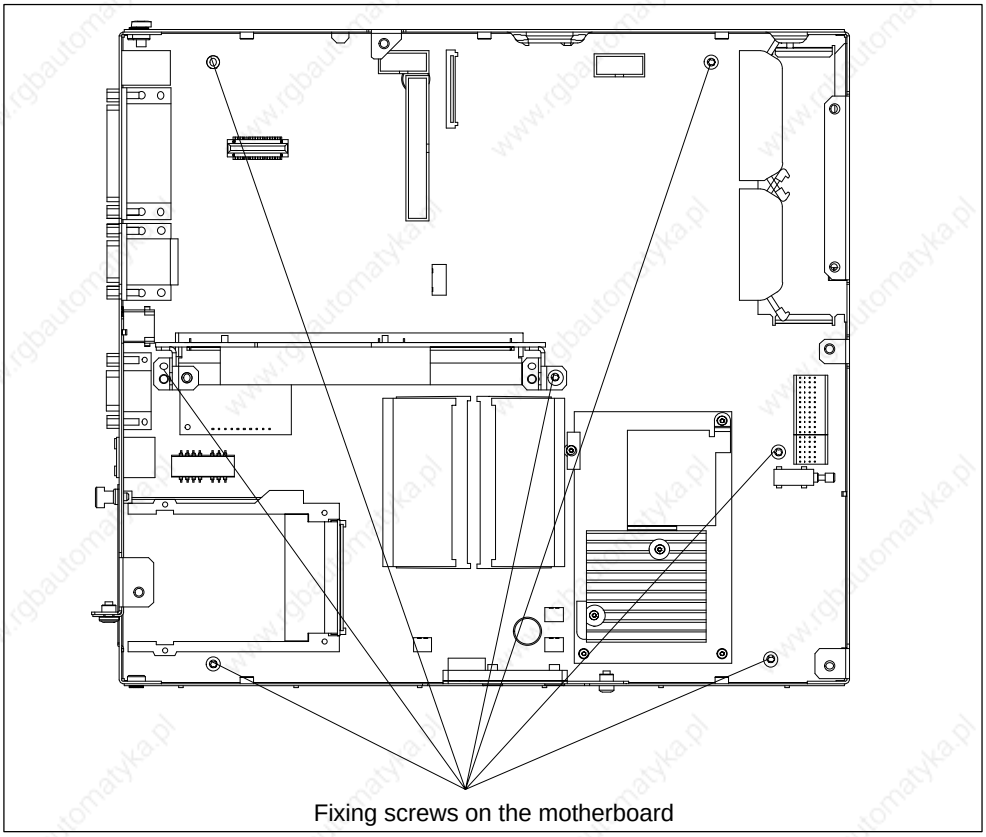

Figure 5-20 Fixing Screws on the Motherboard

The motherboard is available as a replacement part without the processor, memory modules and bus board .

5.8 Removal and Installation of the Fan

The SIMATIC Box PC 620 is cooled by means of a fan which sucks hot air out of the housing.

1. Open the housing as described in Section 5.1.
2. Pull off the fan cable connector on the basic board.
3. The fan is secured to the housing by two plastic rivets. Undo the rivets by pressing out the gudgeon from the rear of the rivet shank.
4. Remove the fan.
5. Proceed in the reverse order for assembly.

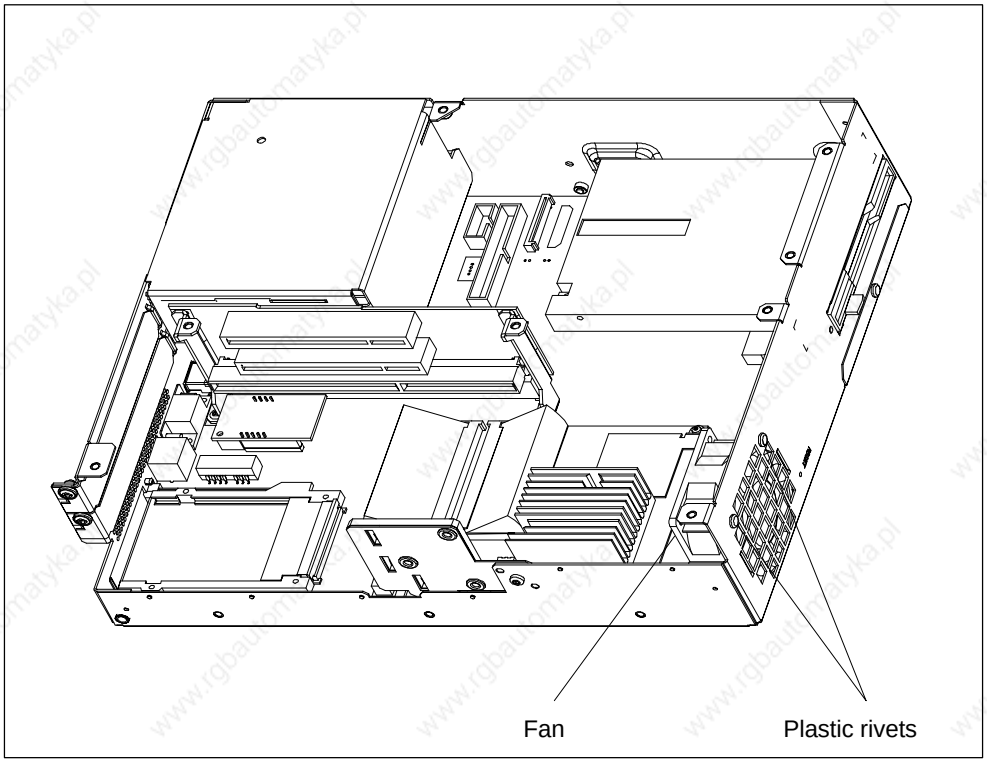

Figure 5-21 Removal and Installation of the Fan

Note

Only a fan of the same type may be fitted!

Caution

To ensure that the device is adequately cooled, take care that the running direction of the fan is correct when installing.

Ensure that the arrow on the fan points to the housing wall.

5.9 Processor Upgrade

You can boost the performance of your SIMATIC Box PC 620 by installing other Celeron or Pentium processors. Consult your local service partner or distributor.

Caution

Risk of damage!
Due to differences in processor voltage, motherboards may only be used with compatible processors.

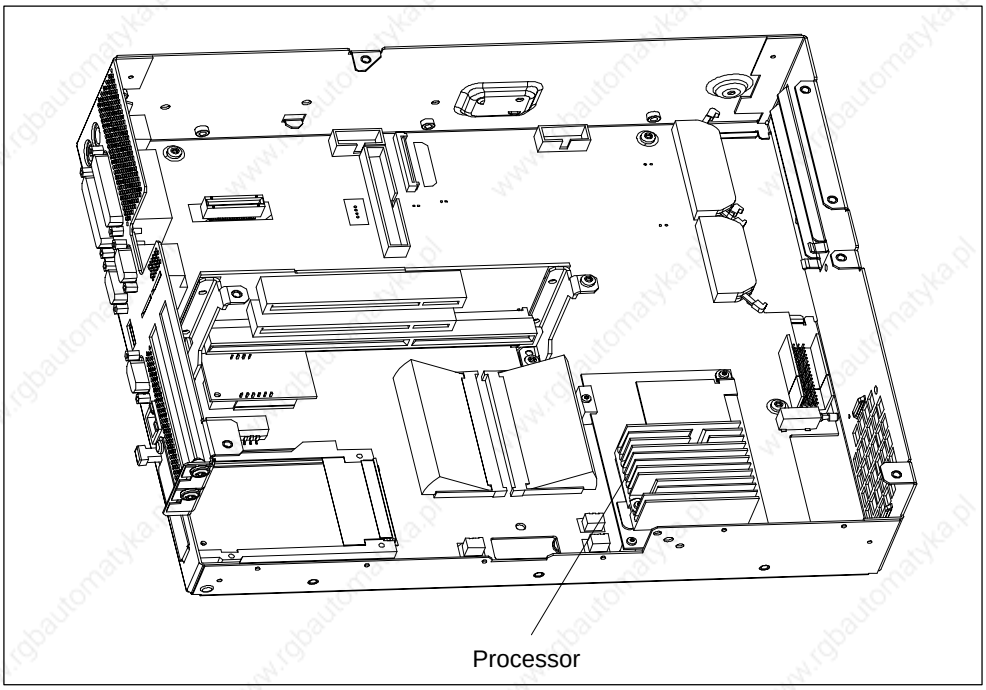

Figure 5-22 Position of the Processor

Note

The processor is available as a replacement part without a heat sink.

If an upgrade is implemented, for example to a processor with a different frequency, it may be important to also upgrade the BIOS.

5.10 Switch Settings / Jumpers

TTY Jumpers (S1) *

S1-1	S1-2	Function
on	**on**	Active TTY port (standard setting)
on	off	TTY send loop separate from power source (passive setting)
off	on	TTY receive loop separate from power source (passive setting)

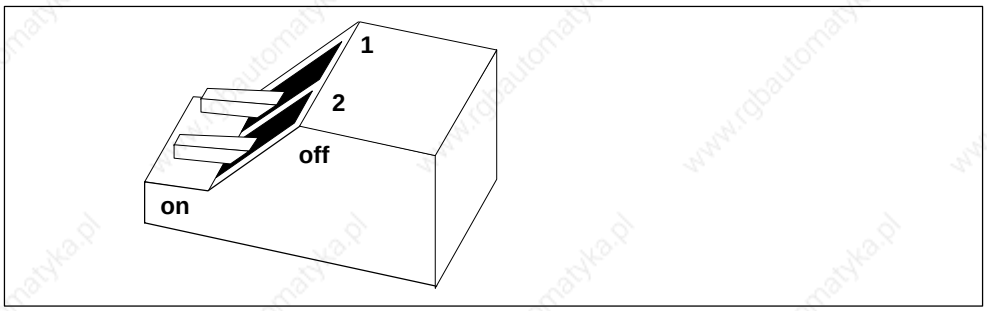

Figure 5-23 Switch Setting TTY Port Active

For TTY operation of the COM1 port, the settings in the setup menu have to be changed (see Section 6.1.2).

* Not available for the basic variant of the Box PC

5.11 Reset Button

A hardware reset is initiated by means of the reset button on your device. The PC is restarted.

In the SIMATIC Box PC 620 the reset button is on the drive side beside the floppy drive. The reset button can be only actuated with a pointed object (e.g. a ball-point pen or an opened-up paper clip). The position of the reset button is marked in the illustration of the SIMATIC Box PC 620 below.

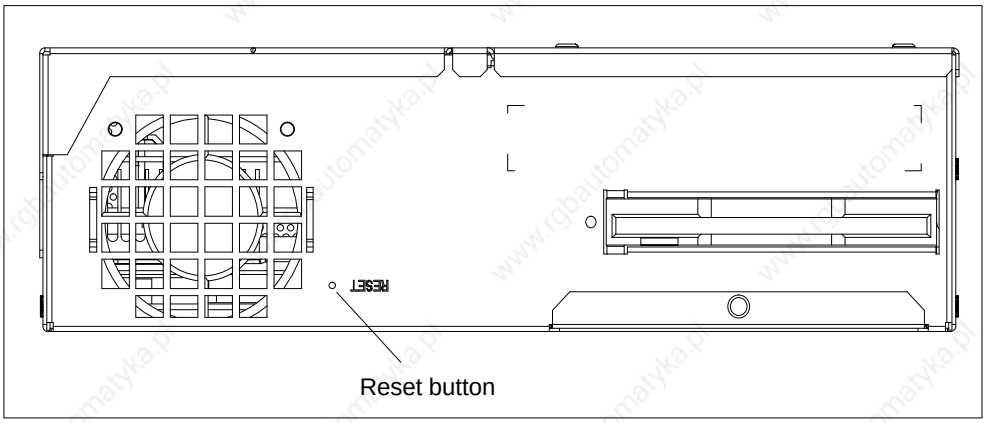

Figure 5-24 Reset Button on the SIMATIC Box PC 620

Configuring the SIMATIC Box PC 620

6

What Does This Chapter Contain?

In this chapter, you will learn how to configure your programming device. You need to do this if you change your system by adding, removing, or exchanging expansion modules and memory expansions, or by replacing a system module.

Chapter Overview

In chapter	you will find	on page
6.1	Changing the Device Configuration with SETUP	6-2
6.1.1	The Main Menu	6-5
6.1.2	The Advanced Menu	6-15
6.1.3	The Security Menu	6-22
6.1.4	The Power Menu	6-24
6.1.5	The Boot Sequence Menu	6-26
6.1.6	The Version Menu	6-28
6.1.7	The Exit Menu	6-29
6.1.8	Default Setup Settings	6-30
6.2	Configuring the PCMCIA Interface	6-33

6.1 Changing the Device Configuration with SETUP

Changing the Device Configuration

Your SIMATIC Box PC 620 device configuration is set for working with the software supplied with the unit. You should only change the preset values if you have modified your Box PC in any way or if a fault occurs when the unit is powered up.

SETUP Program

The SETUP program is in the ROM-BIOS. Information about the system configuration is stored in the battery-backed RAM of the SIMATIC Box PC 620.

You can use SETUP to set the hardware configuration (for example, hard disk type) and define the system characteristics. You can also use SETUP to set the time of day and date.

Incorrect SETUP Data

If incorrect SETUP data are detected when you boot the system, the BIOS prompts you to

- Start SETUP by pressing **F2** or
- Continue booting by pressing **F1**.

Starting SETUP

On completion of the startup test, the BIOS gives you the opportunity of starting the SETUP program by displaying the following screen prompt:

```
PRESS < F2 > to enter SETUP
```

To start SETUP, proceed as follows:

1. Reset your PG 720 (warm or cold restart).
2. Press the **F2** key as long as the BIOS prompt appears on the screen.

SETUP Menus

The various menus and submenus are listed on the following pages. You can get all the information you need for the SETUP entry selected from the **“Item Specific Help”** part of the relevant menu.

Screen Display Following Power On

With the default setting of your PC, the display shown below appears following power-on:

```
Phoenix BIOS 4.0 A5E00016562-ES04
Copyright 1985-98 Phoenix Technologies Ltd.
All Rights Reserved.

SIMATIC Box PC 620 V07.01.04
CPU = Pentium®II  266MHz
640K System RAM Passed
63MB Extended RAM Passed
0128K Cache SRAM Passed
System BIOS shadowed
Video BIOS shadowed
UMB upper limit segment address: xxxx
Mouse initialized
Fixed Disk 0: xxxx
ATAPI CD-ROM: Txxx

Press <F2> to enter SETUP
```

If you press the F2 key while the above display is shown, you select the ROM-based BIOS setup program. In this program, you can set a number of system functions and hardware configurations of your programming device.

The default settings are effective on delivery. You can change these settings using the BIOS setup. The modified settings become effective when you have saved them and terminated the BIOS setup.

The following screen shots may differ from what is shown here, depending on the device configuration. The following screen form appears when you start the BIOS setup:

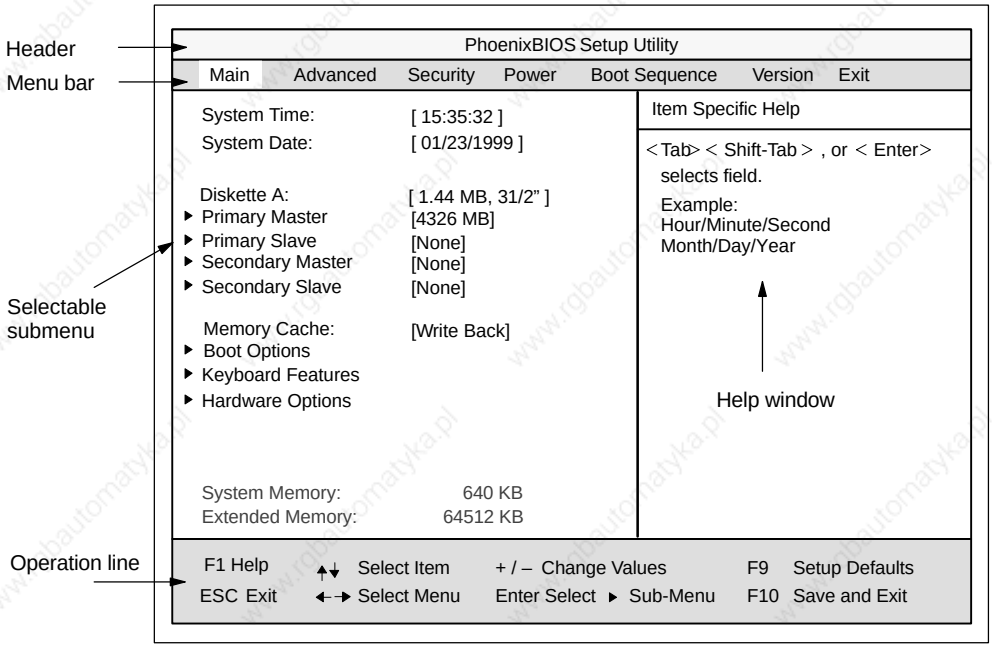

Figure 6-1 SETUP Main Menu

Menu Structure

The screen is divided into four sections. In the top section, you can select the menu screens [Main], [Advanced], [Security], [Power], [Boot Sequence], [Version], [Exit]. In the left of the center section you can select various settings or submenus. Brief help texts appear on the right for the currently selected menu entry. The bottom section contains information for operator inputs.

Yellow stars to the left of the interface designation (for example, Internal COM 1) indicate a resource conflict between the interfaces managed by the BIOS. In this case you should select the default settings (F9) or eliminate the conflict.

You can move between the menu screens using the cursor keys [←] and [→].

Menu	Meaning
Main	System functions are set here
Advanced	An extended sytem configuration can be set here
Security	Security functions are set here, for example a password
Power	Power functions can be selected here
Boot Sequence	The boot priorities are defined here
Version	Information about the programming device's release status
Exit	Used for terminating and saving

6.1.1 The Main Menu

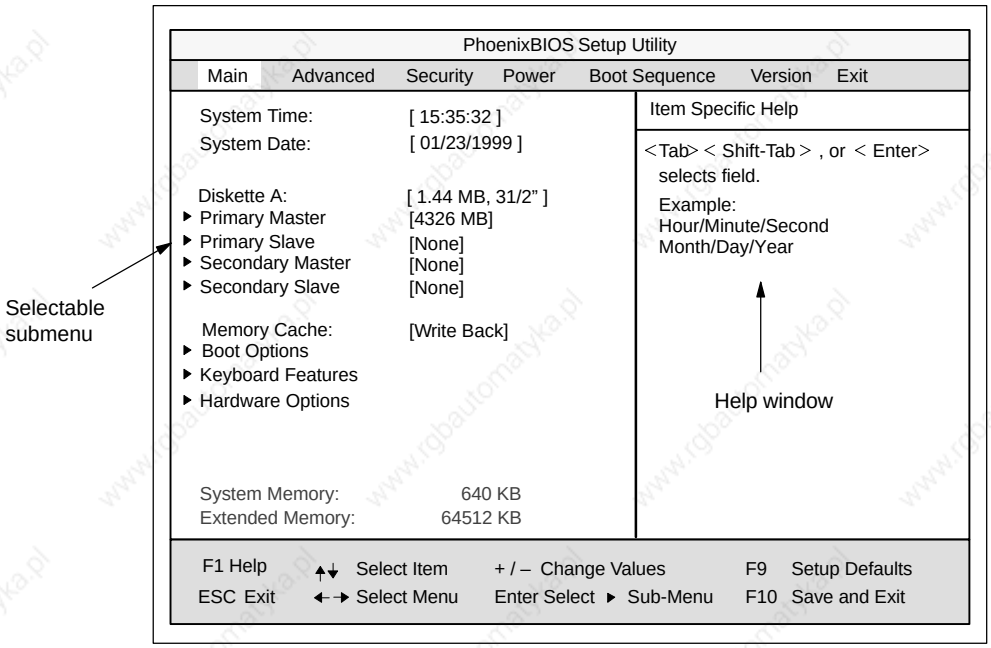

Figure 6-2 SETUP Main Menu

Setting in the Main Menu

In the **Main** menu, you can move upwards and downwards using the cursor keys [↑] and [↓] to select the following system parameters:

Field	Meaning
System Time	For viewing and setting the current time
System Date	For viewing and setting the current date
Diskette A	Type of built in floppy disk drive With LS 120 drive [Disabled]
Memory Cache	For setting the cache options
by submenus	
Primary Master	Type of build in drives
Secondary Master	Type of build in drives
Boot Options	For setting boot options
Keyboard Features	For setting keyboard interface options (e.g. NUM Lock, Typematic Rate)
Hardware Options	For setting hardware options

System Time und System Date *Uhrzeit und Datum*

System Time and System Date indicate the current values. Once you have selected the appropriate option, you can use the [+] and [–] keys to modify the time setting

`Hour:Minute:Second`

and the date

`Month/Day/Year.`

You can move between the entries in the date and time options (for example, from hour to minute) using the tabulator key.

Diskette A *Disk drive*

The type of floppy drive installed in the PC is set here. The following entries are possible:

[Disabled]	If there is no disk drive or LS 120 drive. Default setting for an installed LS 120 drive.
[360 KB,5 1/4”]	
[1.2 MB,5 1/4”]	
[720 KB,3 1/2”]	
[1.44 MB, 3 1/2”]	Default setting for an installed disk drive A
[2.88 MB, 3 1/2”]	

Primary Master *Primary Slave Secondary Master/ Secondary Slave*

The system jumps to the following submenu when you select this type of menu field:

```
PhoenixBIOS Setup Utility
Main
Primary Master [4326MB]                    Item Specific Help

Type:                    [Auto]            [AUTO] (recommended)
Cylinders:               [8940]            Autotypes installed
Heads:                   [     15]         IDE-devices
Total Sectors            [8448300]
Maximum Capacity         4326MB            [USER]
                                           Enter parameters of
Multi-Sector Transfers:  [16 Sectors]      IDE-devices installed
LBA Mode Control:        [Enabled]         at this connection
32 Bit I/O:              [Enabled]
Transfer Mode:           [FPIO 4 / DMA 2]
Ultra DMA Mode:          [Disabled]

F1 Help   ↑↓ Select Item   + / – Change Values        F9  Setup Defaults
ESC Exit  ←→ Select Menu   Enter Select ▶ Sub-Menu    F10 Save and Exit
```

Figure 6-3 Primary Master

“Type” Field

The parameters you can select here are usually stored on the IDE drive. The ’Auto’ setting in the ’Type’ field means that these values are automatically read from the drive and written into memory (**Autodetect**).

If Type is selected for a drive that cannot be detected, a timer times out in approximately 1 minute and the entries remain unchanged. You should always check that the interfaces for which you select ’Auto’ are in fact connected to drives.

Select “User” if you want to define the hard-disk type yourself, in which case remember that you also have to set the other fields, including Cylinder, Heads, Sectors/Track and WritePrecomp, to the correct values for the type of hard disk in question.

“Multi Sector-Transfer” Field

The entry in the Multi-Sector Transfer field defines the number of sectors transferred per interrupt. The value depends on the drive and should be set only by setting the *Type* field to *Auto*.

```
Disabled

 2,4,8,16   sectors
```

“LBA Mode Control” field

If the LBA Mode Control field (enabled,disabled) is set to ’Enabled’, the system supports hard disks with capacities greater than 528 Mbytes. The value depends on the drive and should be set only by setting the *Type* field to *Auto*.

“32 Bit-IO” Field

The setting in the 32 Bit I/O field defines the mode of access for the drive

```
Disabled    16-Bit access

Enabled     32-Bit access    (default)
```

“Transfer Mode” and “Ultra DMA Mode” Fields

The settings in these fields define the interface’s data-transfer rate. The value depends on the drive and should be set only by setting the *Type* field to *Auto*.

Hit ESC to exit the submenu.

”Memory Cache” Field

The following pop-up menu appears when you select the option “Memory cache” in the main menu:

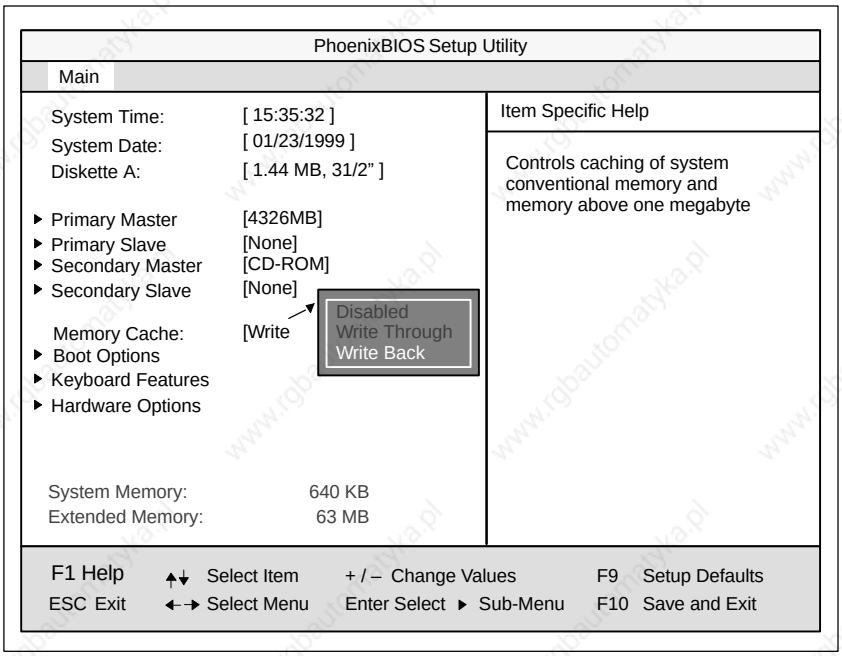

Figure 6-4 “Memory Cache” Menu

A cache is a fast memory buffer between the CPU and main memory (DRAM). Recurrent memory access operations are executed in the fast cache, instead of the main memory, if the function is enabled. In rare instances involving some hardware and software combinations, it may be necessary to disable the cache because the program runtimes or waits are too short on account of the fast cache.

[Disabled]	Cache is disabled
[Write Through]	Write access is not concluded until the entry has been made in main memory
[Write Back]	Write access is concluded immediately; the entry in main memory takes place in the backround (default)

Option ”Boot Options”

The following submenu appears when you select the option “Boot Options” in the main menu:

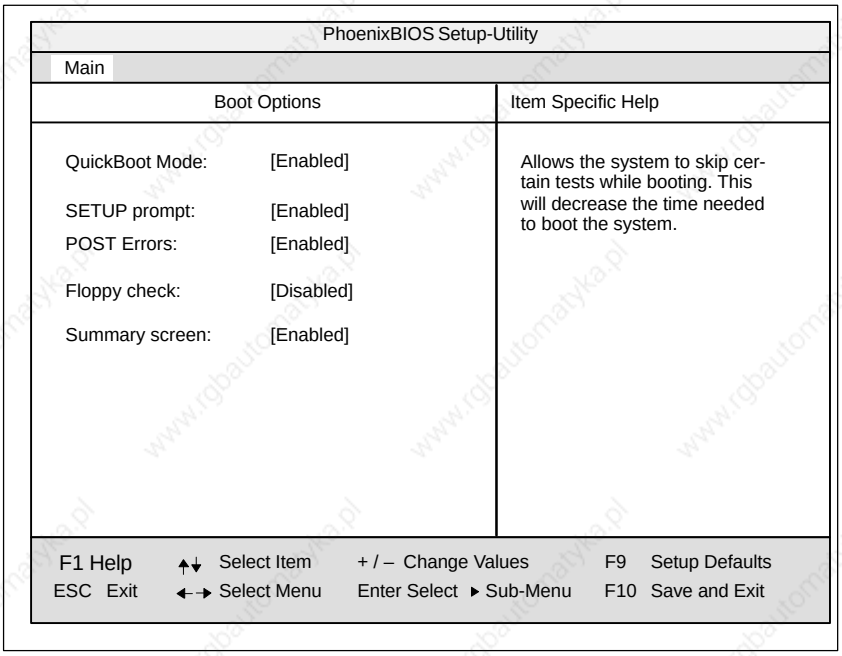

Figure 6-5 ”Boot Options”Submenu

Quick Boot Mode	Some hardware tests are skipped to speed up the boot procedure.
SETUP prompt	The message *PRESS <F2> to enter Setup* appears at the bottom of the screen during the system run-up phase.
POST Errors	The boot process is stopped if an error is detected; you must press F1 to acknowledge. Enter “Disabled”to avoid the necessity of acknowledging errors, for example if no keyboard is connected.

Floppy check	The floppy head is stepped inward and then back to its original position during the system run-up phase. This test is useful because it reinitializes the drive.
Summary screen	The most important system parameters are displayed when the system run-up phase completes.

’Enabled’ means that the feature is active. ’Disabled’ means that the feature is inactive.

Example of a summary screen:

PhoenixBIOS Set Up Utility

SIMATIC Box	PC 620	BIOS Version:	V7....
CPU:	Pentium ® PII	System ROM:	Fxx – FFFF
CPU Speed	266 MHz	BIOS Date:	03/06/97
System	640 KB	COM Ports:	03F8, 02F8
Extended	63 MB	LPT Ports:	0378
Shadow RAM:	384 KB	Display Type:	VGA
Cache RAM:	512 kB	PS/2 Mouse:	Installed
Hard Disk 0:	6495 MB	Diskette A:	1,44 MB, 31/2 ”
Hard Disk 1:	None		
Hard Disk 2:			
Hard Disk 3:	None		

Figure 6-6 Summary Screen

The Summary screen appears when the system run-up phase completes.

Option “Keyboard Features”

The following submenu appears if you select the “Keyboard Features” field in the main menu:

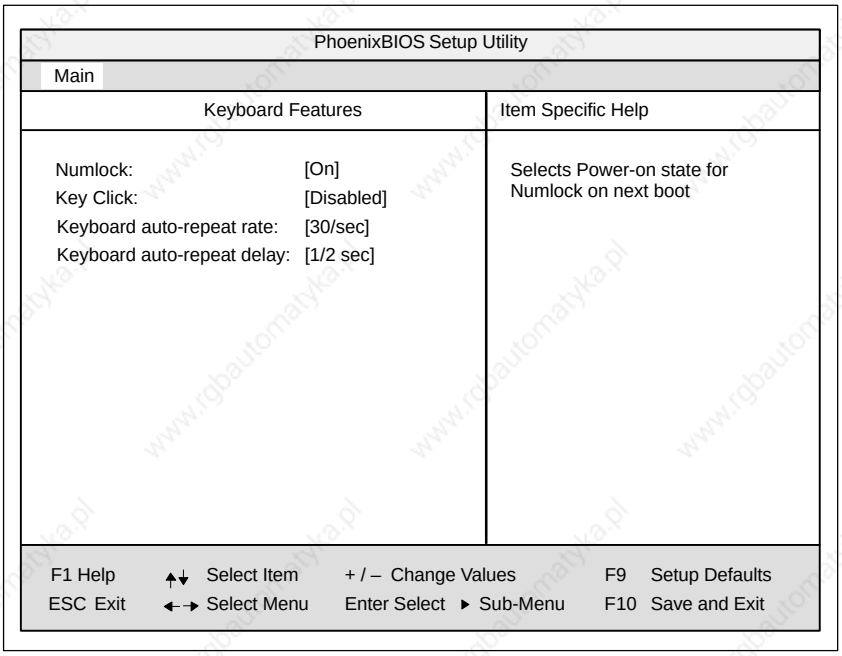

Figure 6-7 ”Keyboard Features”Submenu

Numlock	Switches Numlock on or off following power on
Key Click	A keystroke can be heard
Keyboard auto-repeat rate	Increase in automatic key repeat rate

”Hardware Options” Field

The following submenu appears when you select the “Hardware Options” field in the main menu:

```
PhoenixBIOS Setup-Utility
Main
Hardware Options                          Item Specific Help

PCI - MPI / DP:            [Enabled]
On Board Ethernet          [Enabled]      Enable or disable the
Ethernet Adress:           [080006247000] PCI - Multi Point
Cardbus/PCMCIA Slot:       [Enabled]      Interface (MPI / DP)
SafeCard functions:        [Enabled]
Legacy USB Suport:         [Disabled]

CRT / LCD selection:       [SIMULTAN]
CRT 640 X 480:             [75 Hz]
CRT 800 X 600:             [75 Hz]
CRT 1024 X 768:            [75 Hz]
LCD-Screensize:            [Graph& Text Expand]
DSTN Contrast:             [154]

Trackball / PS/2 Mouse::   [Auto]

F1 Help   ↑↓ Select Item   + / – Change Values      F9  Setup Defaults
ESC Exit  ←→ Select Menu   Enter Select ▶ Sub-Menu  F10 Save and Exit
```

Figure 6-8 ”Hardware Options” Submenu

The parameters of the interfaces present on the basic module are set here.

Entry	Meaning
PCI-MPI/DP *1	Enables the CP5611-compatible MPI/DP interface. The recourses are managed by the BIOS PCI plug and play mechanism.
On Board Ethernet	[Enabled] The ethernet port on the motherboard is enabled. [Disabled] The ethernet port on the motherboard is disabled.
Ethernet Address	The individual ethernet address is entered here.
Cardbus / PCMCIA Slot	[Disabled] Disables the Cardbus / PCMCIA interfaces. [Enabled] The resources are managed by the BIOS PCI plug and play mechanism.
SafeCard functions	[Enabled] On board monitoring functions are enabled. [Disabled] No monitoring functions. The relevant driver and the application must be started for operation of the monitoring functions.
Legacy USB Suport	[Disabled] A USB-capable operating system is required to operate a USB keyboard or a USB mouse. Setup adjustments can be made with a USB keyboard. [Enabled] USB keyboard and USB mouse are supported by the BIOS. Non-USB capable operating systems can be used.

Entry	Meaning	
CRT / LCD selection	[LCD Enabled]	All data is output only to the internal LCD, the 15-way VGA port is disabled
	[CRT Enabled]	For maximum resolution the display signals are output only to the 15-way VGA port; the LCD interface of the VGA controller is disabled.
	[SIMULTAN]	Both display interfaces are enabled and operate simultaneously. Note, however, that the LCD does not support all resolutions.
CRT 640 x 480	Refresh rate with a resolution of 640x480 pixels	
CRT 800 x 600	Refresh rate with a resolution of 800x600 pixels	
CRT 1024 x 768	Refresh rate with a resolution of 1024x768 pixels	
LCD-Screen-size	[Normal]	The display window in Text and Graphic modes is not expanded to full screen size.
	[Text expand]	Only the Text modes are expanded to full screen size.
	[Graph&Text expand]	The Graphic and Text modes are expanded to full screen size.
DSTN Contrast	The contrast of the DSTN displays is set here. Range: 0-255	
Trackball / PS/2 Mouse	[Internal]	The PS/2 port is activated. This is the default for the SIMATIC Box PC 620, the trackball is activated in this setting. IRQ 12 is assigned.
	[External]	The PS/2 port is activated, IRQ12 is assigned. The keyboard trackball is disabled, an external PS/2 mouse must be connected. If no external mouse is connected when the system boots, the BIOS deactivates the PS/2 port.
	[AUTO]	Automatic detection of the type of mouse connected. A PS/2 mouse takes priority over the keyboard trackball
	[Disabled]	The PS/2 port is deactivated, IRQ12 is available.
	Note:	Invariably, changes to this interface do not come into effect until the PC is switched off and on again.

*1 Not available for the basic variant of the Box PC

6.1.2 The Advanced Menu

Menu Structure

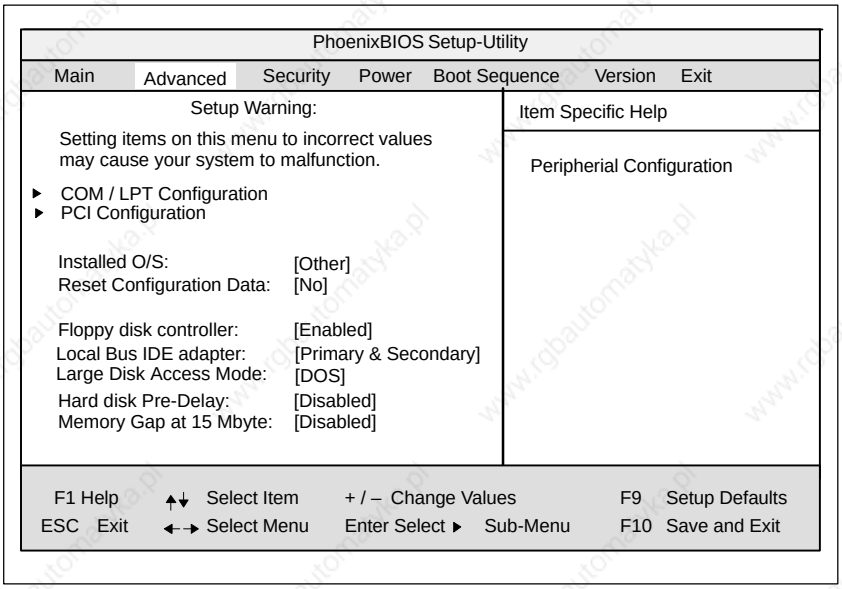

Figure 6-9 ”Advanced”Menu

Setting in the Advanced Menu

Installed O/S	Plug and Play means that all modules are automatically detected and installed, providing they support the Plug and Play functionality. [other] BIOS handles the entire Plug and Play capability, default configuration [Win98] The operating system handles some of the Plug and Play functions
Reset Configuration Data	[Yes] All installations under Plug and Play are deleted and reconfiguration is triggered the next time the system boots. The entry is then reset to [No]. System components that do not support Plug and Play have to be entered manually.
Floppy disk controller	Enables or disables the floppy-disk controller on the motherboard.
Local Bus IDE adapter	[Primary] One IDE interface for max. two drives. [Secondary] [Primary & Secondary] Two IDE interfaces for max. four drives. [Disabled] No local IDE interface.

Large Disk Access Mode	[DOS]	The drive tables are adapted for DOS access operations in accordance with Enhanced IDE.
	[OTHER]	The tables are not adapted.
Hard Disk Pre-Delay	[Disabled]	No additional start-up delay for the hard disk.
	3 to 30 seconds	Additional start-up delay for the hard disk; needed only for older-generation hard disks.
Memory Gap at 15 MByte	[Disabled]	The complete onboard RAM memory is available.
	[Enabled]	A 1MB area of the RAM above 15MB (Addresses F0 0000 – FF FFFF) can be used by ISA expansion cards.

Submenu COM/LPT Configuration

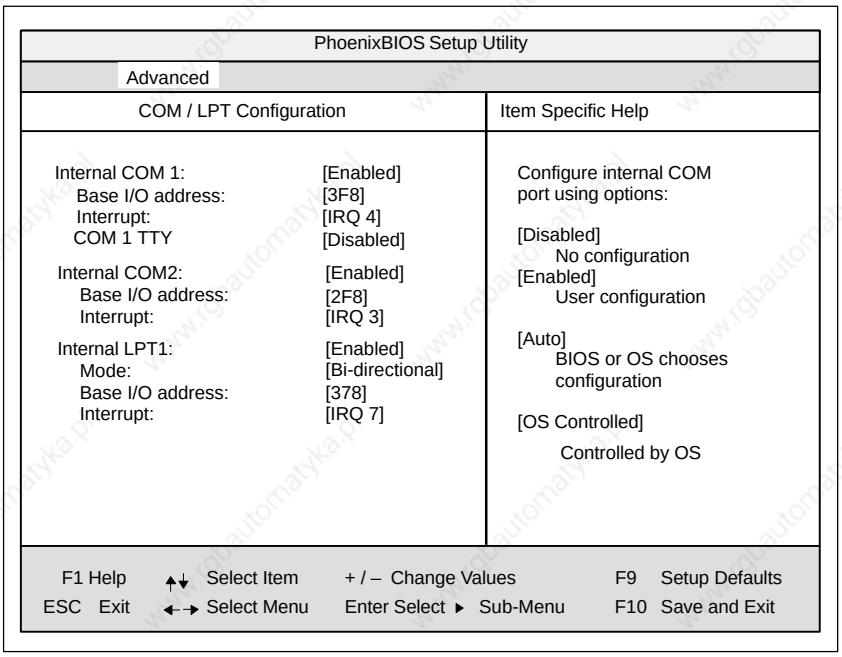

Figure 6-10 COM / LPT Configuration” Submenu

The resources used by an interface are released when you disable the interface in question.

The I/O addresses and interrupts are preassigned: it is advisable not to change these default assignments.

With COM 1, the standard V.24 (RS232) can be changed over to TTY*[1] operation as an alternative:

[Disabled]	means that the V24 connected to COM1 can be operated.
[Enabled]	(Default setting) means that COM1 can be used for TTY operation.

*[1] Not possible for the basic variant of the Box PC

Printer Port Internal LPT1

Mode:	Use this setting to set the operating mode of the printer interface. Refer to the table below to ensure that the setting matches the printer connected to the printer port.

Settable Mode	Features
Output Only Standard parallel port – unidirectional (SPP)	• Standard setting for the 8 bit parallel transfer according to IEEE1284 specifications • Feedback of the output device is only possible via the control cables
Bidirectional Standard parallel port – bidirectional	as for SPP – unidirectional, however: • Feedback of the output device is also possible via the 8 bit data cables
EPP Enhanced parallel port	• Enhanced parallel port (data transfer rate from 500kbps up to 2Mbps) • Hardware handshake • different devices can be addressed
ECP Extended capability port	as for EPP, however: • own DMA channel • FIFO backup • Data compression

PCI Configuration Submenu

```
PhoenixBIOS Setup Utility
Advanced
PCI Configuration                          Item Specific Help

▶ PCI  Device, Slot #1                     Setup items for configuring The
▶ PCI  Device, Slot #2                     specific PCI device
▶ on board PCI Ehternet

▶ PCI/PNP ISA IRQ Resource Exclusion

  PCI  IRQ  line  1:        [Auto Select]
  PCI  IRQ  line  2:        [Auto Select]
  PCI  IRQ  line  3:        [Auto Select]
  PCI  IRQ  line  4:        [Auto Select]

F1 Help   ↑↓ Select Item   + / –  Change Values        F9   Setup Defaults
ESC  Exit ←→ Select Menu   Enter Select ▶  Sub-Menu    F10  Save and Exit
```

Figure 6-11 ”PCI Configuration”Submenu

”PCI Devices” Field

If the PCI devices field is selected, the following submenu appears:

```
PhoenixBIOS Setup Utility.
Advanced
PCI Devices, Slot  #1                      Item Specific Help

                                           Initialize device expansion
  Option Rom Scan          [Enabled]       rom
  Enable Master:           [Enabled]
  Latency Timer:           [0040h]

F1    Help ↑↓ Select Item   + / –  Change Values        F9   Setup Defaults
ESC  Exit  ←→ Select Menu   Enter Select ▶  Sub-Menu    F10  Save and Exit
```

Figure 6-12 Submenu ”PCI Devices, Slot #1”

Option ROM Scan:	[Enabled] [Disabled]	The option ROM of the PCI module (if present) is enabled The option ROM of a PCI module is disabled.
Enable Master:	[Enabled] [Disabled]	This slot can assume the PCI master function This slot can only operate as a PCI slave.
Latency Timer	[Default] [0020H to 00E0H]	The number of active PCI clock cycles of the master modules are determined by the module With these settings, the maximum active PCI clock cycles are set to the selected value.

Submenu “on board PCI Ethernet”

If the on board PCI ethernet field is selected, the following submenu appears:

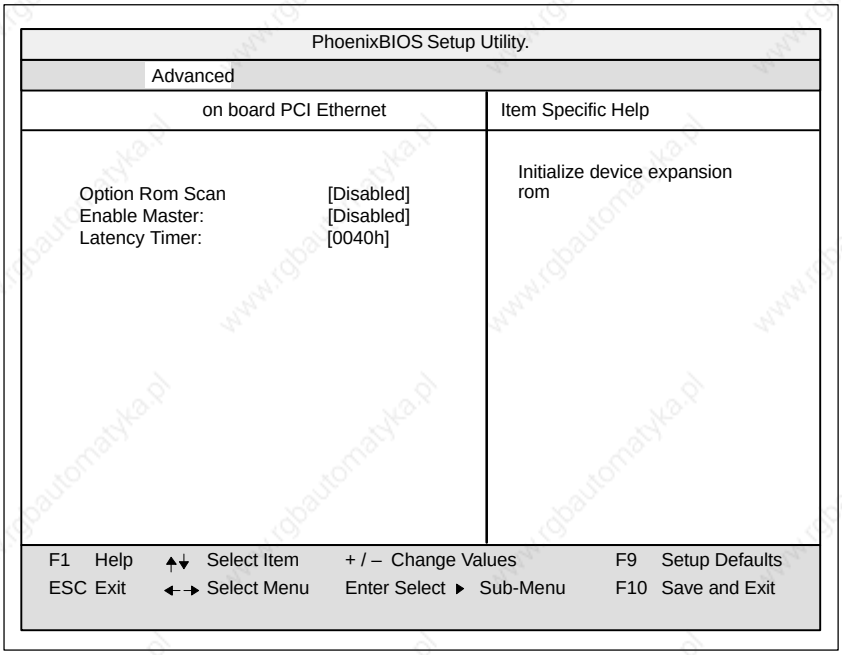

Figure 6-13 Submenu ”on board PCI Ethernet”

Option ROM Scan:	[Enabled] [Disabled]	The option ROM of the PCI module (if present) is enabled The option ROM of a PCI module is disabled.
Enable Master:	[Enabled] [Disabled]	This slot can assume the PCI master function This slot can only operate as a PCI slave.
Latency Timer	[Default] [0020H to 00E0H]	The number of active PCI clock cycles of the master modules are determined by the module With these settings, the maximum active PCI clock cycles are set to the selected value.

Submenu “PCI/PNP ISA IRQ Resource Exclusion”

Available means that the Plug and Play mechanism in BIOS can allocate the IRQ to Plug and Play submodules or motherboard functions.

Use the ’Reserved’ setting only if the interrupt has to be assigned specifically to PCMCIA submodules with no Plug and Play capability.

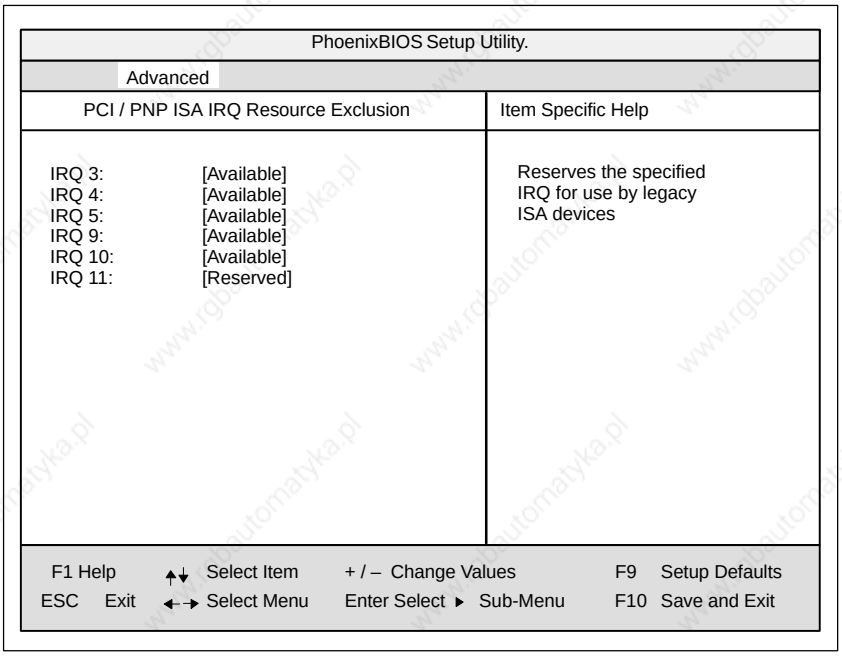

Figure 6-14 ”PCI / PNP ISA IRQ Resource Exclusion” Submenu

Option “PCI IRQ line”

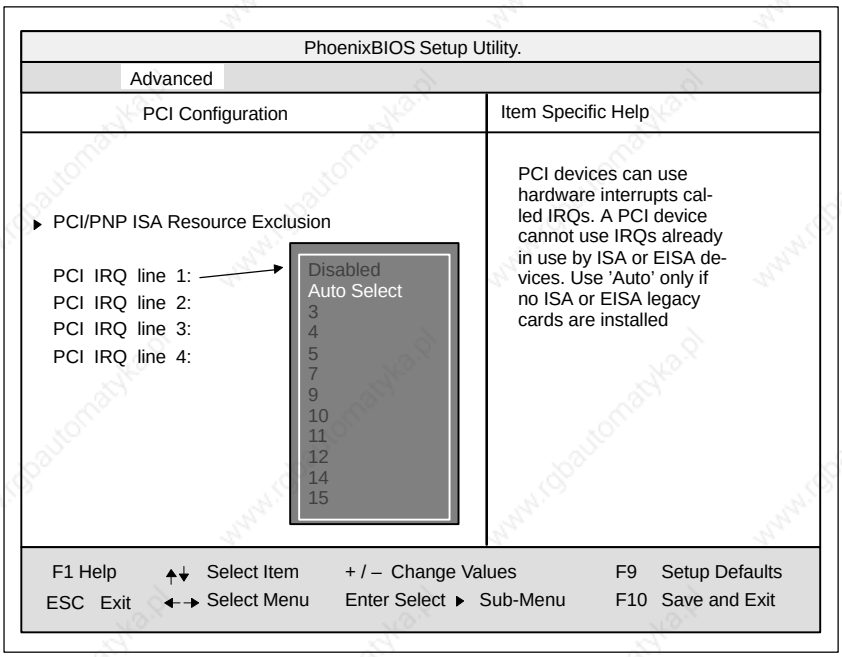

Figure 6-15 ”PCI Configuration” Submenu

Disabled	No interrupt possible for this PCI-IRQ line
AutoSelect	Plug and Play mechanism in BIOS selects unassigned interrupts and allocates them to the on-board PCI devices.
3 to 15	The PCI-IRQ line is assigned to the selected interrupt. Do not use this setting unless it is specifically required in your application’s documentation.

6.1.3 The Security Menu

Summary

You can only edit the fields enclosed in square brackets. Two passwords are assigned to protect your PC from unauthorized use. You can use the supervisor password to prevent use of diskettes for the normal user and to limit use of the hard disk.

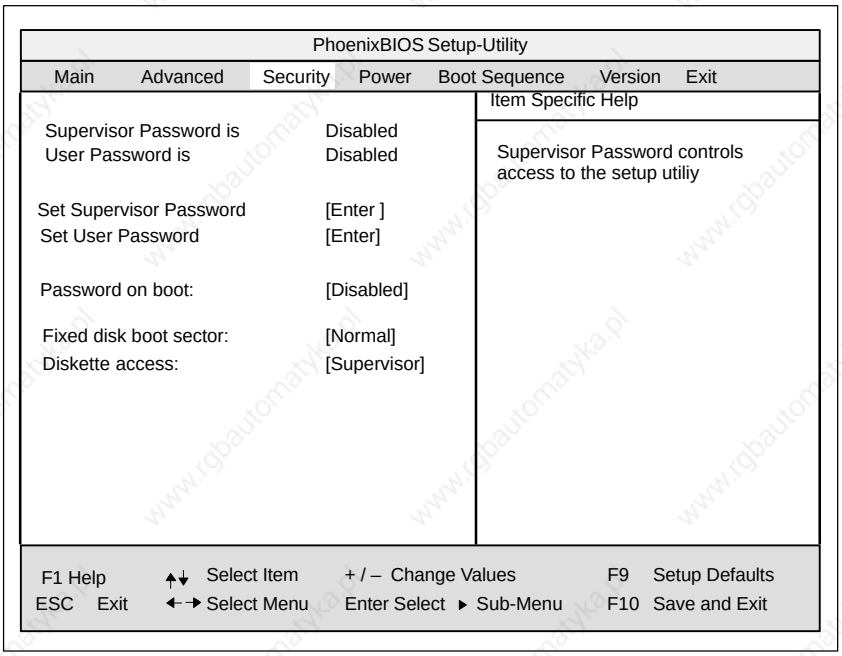

Figure 6-16 ”Security” Menu

User Password is	Disabled	Password is active. BIOS Setup cannot be opened until the password has been entered.
	Enabled	Certain Setup fields are thus configurable by the user, including the user password.
	The field resets automatically from [Disabled] to [Enabled] when the password is entered.	
Set Supervisor Password	This field opens the dialog box for entering a password. Once it has been entered, the supervisor password can be changed or deleted by pressing ”Return” and thus deactivated.	
Set User Password	This field opens the dialog box for entering a password. Once it has been entered correctly, the user password can be changed or deleted by pressing ”Return” and thus deactivated.	
Password on boot	[Disabled]	No password required for system boot.
	[Enabled]	Supervisor or user password must be entered for system boot.
Fixed disk boot Sector	[Normal]	All types of hard-disk access are permitted.
	[Write protect]	No operating system can be installed. This is a way of protecting against boot viruses.

Diskette access	This mode of protection is not active unless ”Password on boot ” is set to [enabled].	
	[Supervisor]	Diskette access is not possible unless the supervisor password was entered during system boot.
	[User]	Diskette access is not possible unless the user password was entered during system boot. **Note:** This function can not be used under WIndows NT/2000, since this operating system does not access the diskette via BIOS routines. Please use the Windows NT/2000 system programs for this purpose.

6.1.4 The Power Menu

Summary

This menu has the following structure.

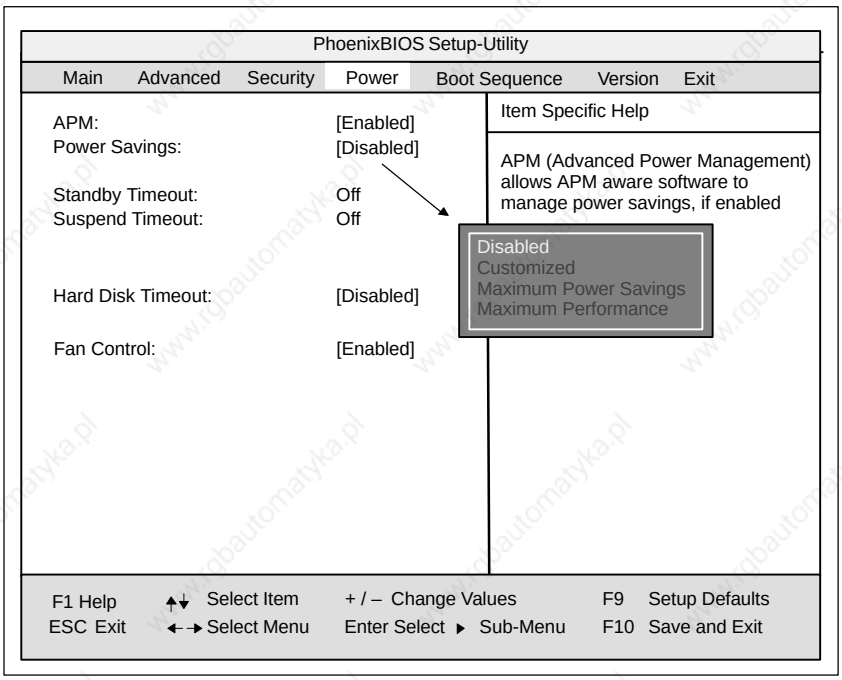

Figure 6-17 ”Power” Menu

The Power menu offers a number of power saver modes for environmentally friendly computing:

APM (Advanced Power Management)	[Enabled] [Disabled]	The operating system can shut down system resources when they are not needed. The operating system is denied APM access.
Power Savings	[Disabled] Power Savings, Maximum Performance]	No power-saving functions[Customize, Maximum User-selectable and preset power saving functions for maximum and minimum power saving. You can set the parameters for Standby/Suspend Timeouts and Fixed Disk Timeout or they set automatically to their defaults.
Standby Timeout	[Off] [30 seconds or 1, 2, 4, 8, 12, 16]	No standby mode ...minutes after your PC enters standby mode.
Suspend Timeout	[Off] [1,2, 5, 10, 15, 20, 30]	No suspend mode seconds after your PC enters suspend mode.

Hard Disk Timeout	[Disabled]	The hard disk does not shut down.
	[10, 15, 30, 60]	Time since the last hard-disk access, the hard disk is shut down. The next time it is accessed, the hard disk starts spinning again after a brief delay.
Fan Control	[Enabled]	Fan always runs at full speed
	[Enabled]	Fan speed depends on temperature.

6.1.5 The Boot Sequence Menu

Summary

This menu allows you to prioritize the boot devices.

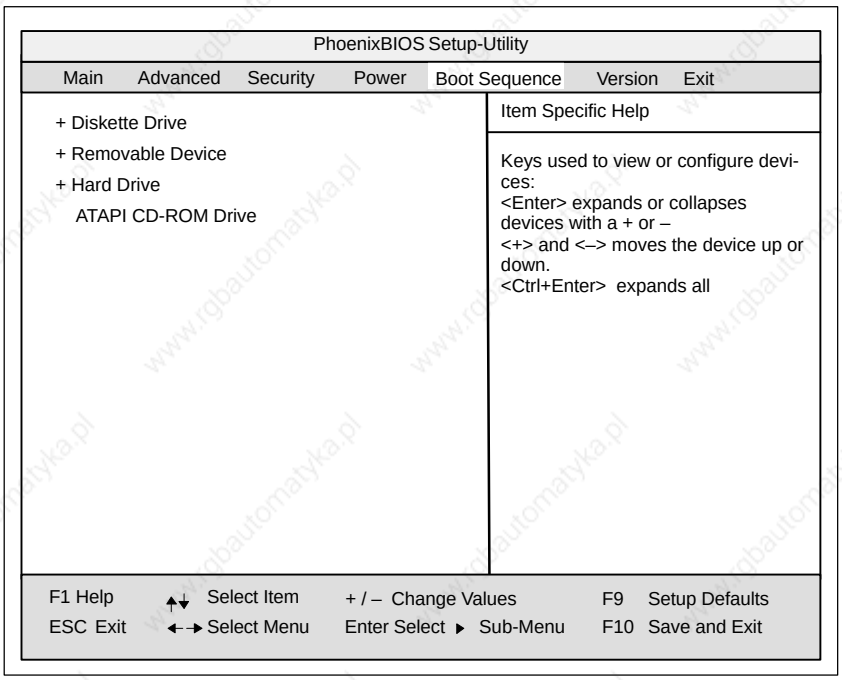

Figure 6-18 The ”Boot Sequence” Menu

This menu lists the boot devices in groups. The group with the highest priority is at the top. The procedure for changing the sequence is as follows:

Use the ↑↓ keys to select a group and the + or – keys to move the group to its new position in the sequence.

Note

During booting the boot drive can be selected with the ESC key.

Groups marked + can contain more than one device. When you select a group marked in this way, hit Enter to view the list of devices in the group. See the figure below for an illustration:

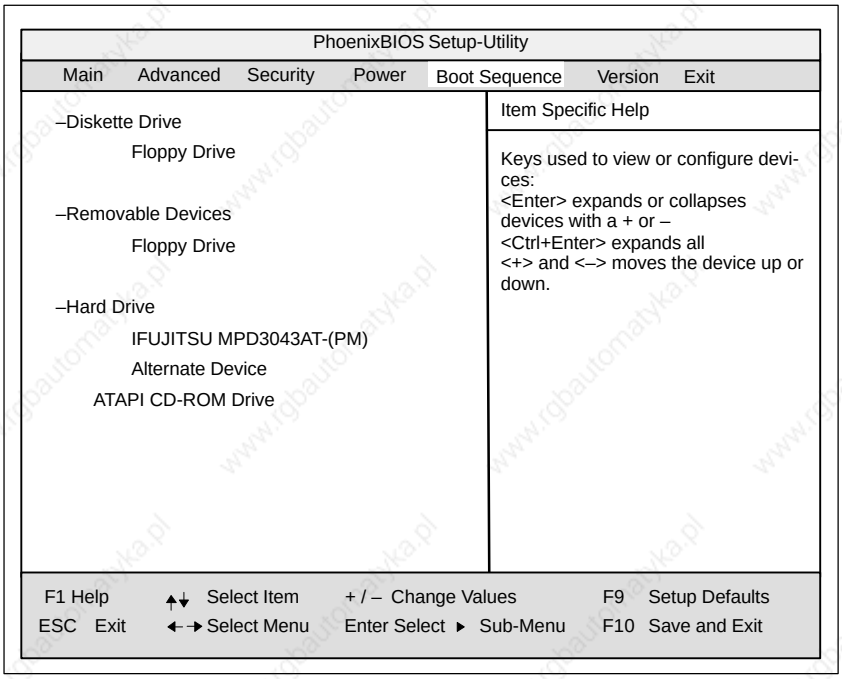

Figure 6-19 The ”Boot Sequence” Menu

This screen shows all possible boot devices; within a given group the highest priority device is always listed first. Here again, you can change the sequence as described above.

If a boot device is not available, the next device in the sequence is automatically checked to ascertain whether or not it is bootable.

6.1.6 The Version Menu

This menu contains the information you will have to quote when you send us technical questions about your system.

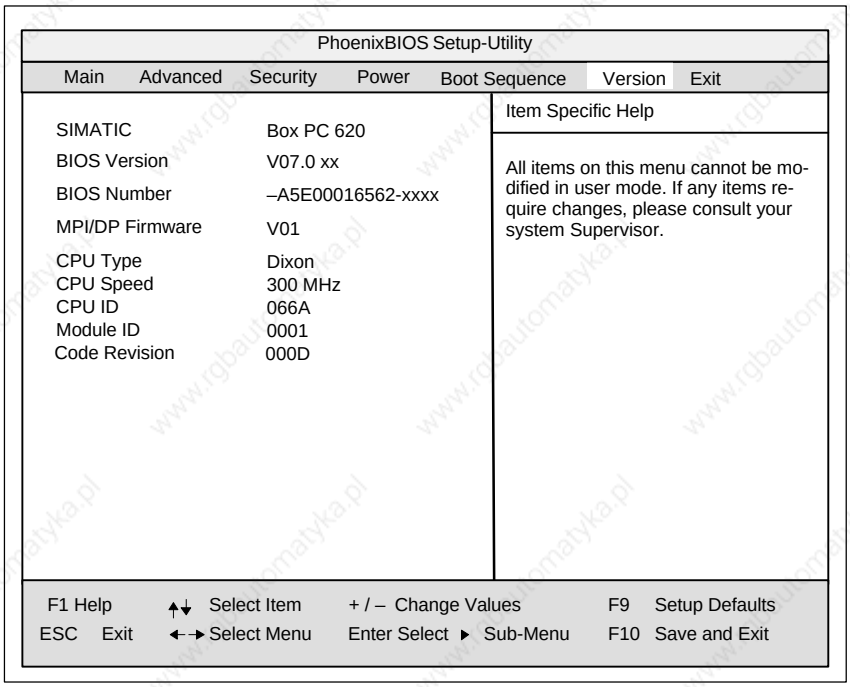

Figure 6-20 The "Version" Menu

6.1.7 The Exit Menu

The Exit Menu

The setup program is always terminated using this menu.

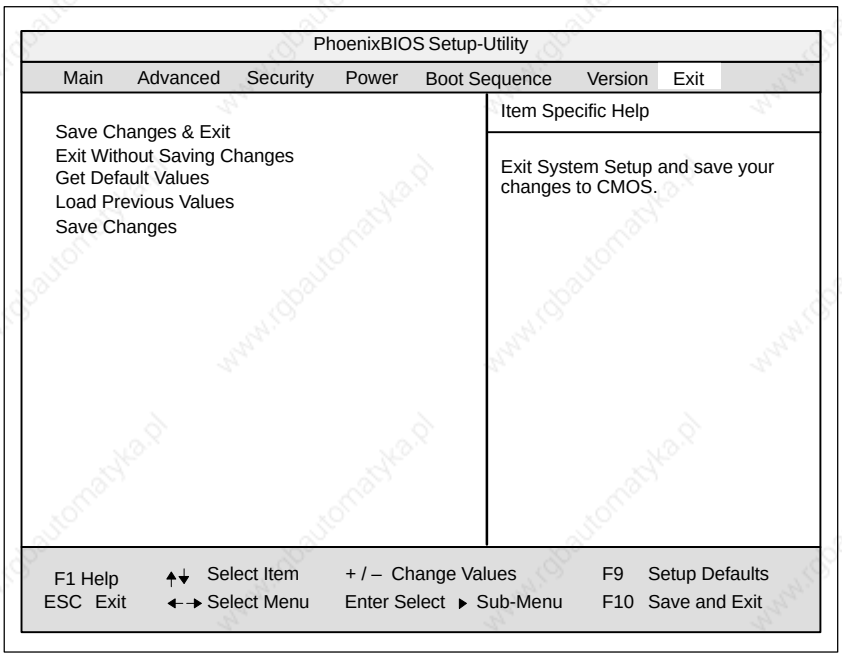

Figure 6-21 ”Exit” Menu

Save Changes & Exit	All changes are saved; a system restart is carried out with the new parameters.
Discard Changes & Exit	All changes are rejected; a system restart is carried out with the old parameters.
Get Default Values	All parameters are set to safe values.
Load Previous Values	The last saved values are reloaded.
Save Changes	Save all Setup settings.

6.1.8 Default Setup Settings

Documenting Your Device Configuration

If you have made any modifications to the default Setup settings, you can enter them in the following table. You can then refer to these entries if you need to make any hardware modifications later.

Note

Print the following table out and keep the pages in a safe place once you have filled in your entries.

Systemparameter	Default Settings	YourEntries
Main		
System Time	hh:mm:ss	
System Date	MM/TT/JJJJ	
Diskette A	1,44 MB, 3 1/2” / bei LS 120: Disabled	
Primary Master	C: 4326 MB	
Primary Slave	None	
Secondary Master	none	
Secondary Slave	None	
Memory Cache	Write back	
Boot Options		
Quick Boot Mode	Enabled	
SETUP prompt	Enabled	
POST Errors	Enabled	
Floppy check	Disabled	
Summary screen	Enabled	
Keyboard Features		
Num Lock	On	
Key Click	Disabled	
Keyboard auto-repeat rate:	30/s	
Keyboard auto-repeat delay	1/2s	
Hardware Options		
PCI-MPI/DP:	Enabled	
On Board Ethernet	Enabled	
Ethernet Adress	08000624xxxx	
Cardbus/PCMCIA Slot	Enabled	
SafeCard Functions	Enabled	
Legacy USB Suport	Disabled	
CRT/LCD selection	SIMULTAN	

Systemparameter	Default Settings	YourEntries
CRT 640 x 480	75 Hz	
CRT 800 x 600	75 Hz	
CRT 1024 x 768	75 Hz	
LCD Screensize	Graph&Text Expanded	
DSTN Contrast	154	
Trackball / PS2 Mouse	Auto	
Advanced		
COM/LPT Configuration		
Internal COM1	Enabled	
Base I/O address	3F8	
Interupt	IRQ4	
Internal COM2	Enabled	
Base I/O address	2F8	
Interrupt	IRQ3	
Internal LPT1	Enabled	
Mode	Bi-directional	
Base I/O address	378	
Interrupt	IRQ7	
DMA Channel (nur bei ECP	DMA 10	
PCI-Configuration		
PCI Device Slot 1		
Option ROM Scan	Enabled	
Enable Master	Enabled	
Latency timer	0040 h	
PCI Device Slot 2		
Option ROM Scan	Enabled	
Enable Master	Enabled	
Latency timer	0040 h	
on board PCI Ethernet		
Option ROM Scan	Disabled	
Enable Master	Disabled	
Latency timer	0040 h	
PCI/PnP ISA IRQ Exclusuion		
IRQ3	Available	
IRQ4	Available	
IRQ5	Available	
IRQ9	Available	
IRQ10	Available	
IRQ11	Reserved	
PCI IRQ Line 1	Auto Select	
PCI IRQ Line 2	Auto Select	
PCI IRQ Line 3	Auto Select	
PCI IRQ Line 4	Auto Select	
Installed O/S	Other	
Reset Configuration Data	No	
Floppy disk controller	Enabled	

Systemparameter	Default Settings	YourEntries
Local Bus IDE adapter	Primary & Secondary	
Large Disk Access Mode	DOS	
Hard Disk Pre-Delay	Disabled	
Memory Gap at 15 Mbyte	Disabled	
Security		
Supervisor Password Is	Disabled	
User Password Is	Disabled	
Set Supervisor Password	Enter	
Set User Password	Enter	
Password on boot	Disabled	
Fixed disk boot sector	Normal	
Diskette Access	Supervisor	
Power		
APM	Enabled	
Power Savings	Disabled	
Standby Timeout	off	
Suspend Timeout	off	
Hard Disk Timeout	Disabled	
Fan Control	Enabled	
Boot Sequence		
Diskette Drive		
Removable Devices		
Hard Drive		
ATAPI CD-ROM Drive		
Version		
SIMATIC	Box PC 620	
BIOS Version	V7.xx	
BIOS Number	A5E16562-ESxx	
MPI/DP Firmware	V01	
CPU Type	Celeron	
CPU Speed	300 MHz	
CPU ID		
Code Revision	0015	

6.2 Configuring the PC Card

You can obtain the software you require for using PC cards under MS DOS, such as

- Socket Services
- Card Services
- Client Drivers
- Flash File System

from the nearest Siemens sales office or representative.

Your PC comes supplied with Windows 98 / NT4 / 2000 already installed; this supports the PC Card interface.

After configuration, the computer must be rebooted.

Error Diagnosis

7

Overview of Chapter

In chapter	you will find	on page
7.1	Diagnosing errors	7-2
7.2	Self-test of the SIMATIC Box PC 620 before booting	7-3

7.1 Diagnosing Errors

Error	Cause	Remedy
Power–ON LED is not lit	• Connection to power supply is faulty	• Check the connection to the power supply, mains cable, mains plug
The message: ”Invalid configuration information... Press the F1 key to continue, F2 to run Setup utility” appears on the display/monitor	• Incorrect configuration data • Back-up battery defective or dead	• Press the ”F2” key, check the configuration data in the Setup program, enter default values if necessary, check error messages in the first Setup mask
The message: ”No boot device available” appears on the display/monitor	• No bootable disk in the drive • Wrong hard disk type entered in Setup	• Use the ”Fixed Disk Function” in the Setup program
Message: ”Keyboard stuck key failure”	• A blocked key was found during the system self-test of the keyboard	• Check keyboard • Restart system
The power–up of the PC is terminated after several beeps	• An error occurred during the system self-test	• Check hardware (see also Section 2.1).
Every time a key is pressed, a beep sounds without characters being displayed	• Keyboard buffer overflow	• <CTRL> <PAUSE>
Not ready error when attempting to read from floppy disk	• No floppy disk inserted • Floppy disk is not formatted	• Insert floppy disk • Format floppy disk
Write protection error occurs when attempting to write to floppy disk	• Floppy disk is write protected • The gate is open with 3.5” format	• Remove write protection
No response from ports COM1,COM2, LPT1 or MPI/DP	• Ports are set to ”Disabled”in the Setup program.	• Set the ports COM1,COM2, LPT1 or MPI/DP to ”Enabled” in the submenu ”Hardware Options” in the Setup program.
<\> **key is not displayed**	• Incorrect keyboard driver being used	• Load correct keyboard driver • <ALT> <9> <2>
Mouse does not function	• Mouse ball is not rotating • No/wrong mouse driver	• Clean mouse ball and housing • Load correct mouse driver
Mouse cursor cannot be moved	• The PS/2 port is set to ”disabled” in setup	• Check setup entry
Mouse cursor moves jerkily	• Mouse ball is dirty	• Clean mouse ball and housing
Drive cover cannot be opened	• Filter cover is not located correctly	• Press filter cover on firmly

7.2 Self-Test of the SIMATIC Box PC 620 before Booting

When the PC is powered up, it runs a self-test (POST = Power On Self Test). If the POST detects a fault, it outputs the sequence of beeps (beep code) assigned for the fault. Each beep code consists of 2 x 2 sequences.

Conversion table for the beep codes to hexadecimal representation:

Beeps		Hex-Code
B	B	0
B	BB	1
B	BBB	2
B	BBBB	3
BB	B	4
BB	BB	5
BB	BBB	6
BB	BBBB	7
BBB	B	8
BBB	BB	9
BBB	BBB	A
BBB	BBBB	B
BBBB	B	C
BBBB	BB	D
BBBB	BBB	E
BBBB	BBBB	F

Example:

B	BBBB	BBB	BBB	Beeps
3		6		Hex-Code
Check shutdown code				Meaning

The POST Codes in order of occurrence:

Display (hex)	Meaning	Description
02	TP_VERIFY_REAL	Test whether the CPU is in real mode
1C	TP_RESET_PIC	Reset the interrupt controller
12	TP_RESTORE_CRO	Restore the controller register
13	TP_PCI_BM_RESET	Reset the PCI bus master
36	TP_CHK_SUTDOWN	Check the shutdown code
24	TP_SET_HUGE_ES	Switch the ES to special mode
03	TP_DISABLE_NMI	Switch off the NMI
0A	TP_CPU_INIT	Initialize the CPU
04	TP_GET_CPU_TYPE	Determine the CPU type
AE	TP_CLEAR_BOOT	Edit the boot flag
06	TP_HW_INIT	Initialize the main hardware
18	TP_TIMER_INIT	Initialize the timer
08	TP_CS_INIT	Initialize the chip set
C4	TP_PEM_SIZER_INIT	Reset system error
0E	TP_IO_INIT	Initialize IO
0C	TP_CACHE_INIT	Initialize the cache
16	TP_CHECKSUM	EPROM checksum test
28	TP_SIZE_RAM	Determine the RAM size
3A	TP_CACHE_AUTO	Determine the cache size
2A	TP_ZERO_BASE	Set 512k base RAM to 0
2C	TP_ADDR_TEST	Test the base RAM address cables
2E	TP_BASERAML	Check the 1.64k base RAM
38	TP_SYS_SHADOW	BIOS-Shadow
20	TP_REFRESH	Refresh circuit test
29	TP_PMM_INIT	Initialize the post memory manager
33	TP_PDM_INIT	Initialize the dispatch manager
C1	TP_7xx_INIT	Initialize the PG 7xx I/Os
09	TP_SET_IN_POST	Start power ON self-test
0A	TP_CPU_INIT	Initialize the CPU
0B	TP_CPU_CACHE_ON	Switch on the cache
0F	TP_FDISK_INIT	Initialize the hard disk
10	TP_PM_INIT	Initialize the power management
14	TP_8742_INIT	Initialize the 8742 circuit
1A	TP_DMA_INIT	Initialize the DMA circuits
1C	TP_RESET_PIC	Reset the interrupt controller
32	TP_COMPUTE_SPEED	Determine the clock pulse speed
C1	TP_740_INIT	Initialize the PG 740 I/Os
34	TP_CMOS_TEST	Test the CMOS RAM
3C	TP_ADV_CS_CONFIG	Configure the advanced chip set
42	TP_VECTOR_INIT	Initialize the interrupt vectors
46	TP_COPYRIGHT	Test the copyright

Display (hex)	Meaning	Description
49	TP_PCI_INIT	Initialize the PCI interface
48	TP_CONFIG	Check the configuration
4A	TP_VIDEO	Initialize the video interface
4C	TP_VID_SHADOW	Copy the video BIOS to RAM
24	TP_SET_HUGE_ES	Switch the ES to special mode
22	TP_8742_TEST	Test circuit 8742
52	TP_KB_TEST	Keyboard available?
54	TP_KEY_CLICK	Switch the keyboard click on/off
76	TP_KEYBOARD	Check the keyboard
58	TP_HOT_INT	Test for unexpected interrupts
4B	TP_QUIETBOOT_START	Switch off any boot messages
4E	TP_CR_DISPLAY	Display the copyright notice
50	TP_CPU_DISPLAY	Display the CPU type
5A	TP_DISPLAY_F2	Display the F2 message for “SETUP”
5B	TP_CPU_CACHE_OFF	Switch off the cache if applicable (SETUP setting)
5C	TP_MEMORY_TEST	Test the system memory
60	TP_EXT_MEMORY	Test the extended memory
62	TP_EXT_ADDR	Test the A20 address line
64	TP_USERPATCH1	Area for own initializations
66	TP_CACHE_ADVNCD	Determine and enable the cache size
68	TP_CACHE_CONFIG	Configure and test the cache
6A	TP_DISP_CACHE	Display the cache configuration
6C	TP_DISP_SHADOWS	Configuration and size of the shadow Display RAM
6E	TP_DISP_NONDISP	Display nondisposable segment
70	TP_ERROR_MSGS	Display post error
72	TP_TEST_CONFIG	Check SETUP irregularities
7C	TP_HW_INTS	Set the IRQ vectors
7E	TP_COPROC	Check whether the CO processor is present
96	TP_CLEAR_HUGE_ES	Switch the ES back
80	TP_IO_BEFORE	Disable IO circuits
88	TP_BIOS_INIT	Initialize the BIOS data area
8A	TP_INIT_EXT_BDA	Initialize the external BIOS data area
85	TP_PCI_PCC	Determine the PCI circuits
82	TP_RS232	Determine the serial interfaces
84	TP_LPT	Determine the parallel interface
86	TP_IO_AFTER	Reenable the IO circuits
83	TP_FDISK_CFG_IDE_CTRLR	Configure the IDE controller
89	TP_ENABLE_NMI	Enable the NMI
8C	TP_FLOPPY	Initialize the floppy controller
90	TP_FDISK	Initialize the hard disk controller

Display (hex)	Meaning	Description
8B	TP_MOUSE	Test the internal mouse interface
95	TP_CD	Test the CP
92	TP_USERPATCH2	Area for own initializations
98	TP_ROM_SCAN	Search for BIOS expansions
69	TP_PM_SETUP	Initialize the power management
9E	TP_IRQS	Enable the hardware IRQ
A0	TP_TIME_OF_DAY	Set the clock time and date
A2	TP_KEYLOCK_TEST	Preset the keylock
C2	TP_PEM_LOCK	Stop the error manager
C3	TP_PEM_DISPLAY	Display any possible errors
A8	TP_ERASE_F2	Delete the F2 message
AA	TP_SCAN_FOR_F2	Check whether to activate setup
AC	TP_SETUP_CHEK	Output any F1/F2 message
AE	TP_CLEAR_BOOT	Cancel the self-test flag
B0	TP_ERROR_CHECK	Check for any possible errors
B2	TP_POST_DONE	End of the self-test
BE	TP_CLEAR_SCREEN	Clear the screen
B6	TP_PASSWORD	Password query (option)
BC	TP_PARITY	Cancel the parity memory bit
BD	TP_BOOT_MENU	Display the boot menu (option)
B9	TP_PREPARE_BOOT	Prepare the boot
C0	TP_INT19	Boot via Interrupt 19
00		Message after startup is complete

If the INSERT key is pressed during the booting of the system, 3 short beeps are emitted. This signal means that the initialization of the special PC hardware has been skipped.

If your SIMATIC Box PC 620 does not power up properly, you can advise the hotline of the hex code of the POST.

Hardware Information

8

Overview of Chapter

In chapter	you will find	on page
8.1	Current Requirement of the Components (Maximum Values)	8-2
8.2	Overview of the Components and Ports	8-3
8.3	Hardware Address Table	8-4
8.4	Interrupt Assignment	8-8
8.5	Video Modes of the SIMATIC Box PC 620	8-10
8.6	Monitoring Functions	8-11
8.7	Ports	8-14
8.8	Bus Unit	8-38
8.9	CD-ROM Drive	8-44
8.10	Power Supply Unit (AC)	8-46
8.11	Power Supply Unit (DC)	8-47
8.12	Connecting Cables	8-48

8.1 Current Requirement of the Components (Maximum Values)

Basic System

Component	Voltage					
	+5V	**+3.3V**	**+12V**	**+18V**	**–5V**	**–12V**
Pentium II Motherboard	0.5 A	1.9 A	0.1 A	0.08 A		0.02 A
Processor Pentium II 333	1.8 A					
Floppy disk drive / LS 120	0.56 A					
Hard disk	0.56 A		0.4 A			
CD ROM drive	0.7 A					
Fan			0.2 A			
Sum (basic configuration)	**4.12 A**	**1.9 A**	**0.7 A**	**0.08 A**	**0 A**	**0.02 A**
ISA/PCI slots (Sum)	3 A		0.6 A		0.1 A	0.1 A
PC-Card slot	0.5 [1]	0.6 A [1]	0.12 A			
Sum (max. for maximum configuration)	**10 A** [2]	**4.2 A**	**1.7 A** [3]	**0.080 A**	**0.1 A**	**0.2 A**
Total power consumption	84W					

1 Alternative 5V or 3.3V
2 11A, if the total power consumption is not exceeded
3 3A, if the total power consumption is not exceeded

8.2 Overview of the Components and Ports

Component/Port	Description	Parameters
Chipset	Single chipset 440BX	• SDRAM • ECC support
BIOS	Update via software	• 512K in 4 pages
CPU	Mobile Pentium II / III / Celeron (type MMC2)	• Upgradeable • Multimedia support • On Board L2-Cache with 128 k/256 k
Memory	DIMM modules up to max. 256MB/DIMM	• Data capacity of 64 bits + ECC • Modules with ECC possible • 3.3 V • SDRAM to PC100 specification • up to 128MBit chip size on the module • 66/100MHz bus speed • 2 DIMMs can be used • easy to exchange • variable from 64-512MB/DIMM
Grafik	XGA-LCD-Controller am AGP-Bus (C&T 69000)	• 2 MByte SDRAM-Grafikspeicher • CRT: bis 1024x768/75Hz 65535 Farben oder bis 1280x1024/75Hz 256 Farben
Hard Disk	ATA-33 mode	• Ultra DMA capable
CDROM	Master on secondary EIDE port	• 24 speed
Floppy	Notebook port for 34 pin flat cable	• 1.44 MB
LS120	Slave on secondary EIDE port	• 1.44MB standard floppy disks • 120MB SuperDisk
Keyboard	Port for PS2 keyboard	• Standard • Trackball is supported
Mouse	PS2 mouse port	• Standard
Serial	COM1/25 pins COM2/9 pins.	• TTY *2 and V24 • Standard
TTY *2	Communication with SIMATIC S5-CPUs	• Range up to 1000 m
Parallel	Standard, bidirectional, EPP and ECP mode	• 25 pin subminiature Cannon connector
DP12 *2	Communication port SIMATIC S7	• potentially isolated DP12 *1 (CP 5611 compatible) • 12MBaud
USB	Universal Serial Bus	• two high current (500mA) USB ports (1x external and 1x internal)
Ethernet	10BaseT/100Base-TX (Intel 82559)	• 10/100 Mbps, potentially isolated *1

*1 Electrically isolated in a safety extra-low voltage circuit (SELV)
*2 Not available for the basic variant of the Box PC

8.3 Hardware Address Table

In the distribution of the address areas a distinction is made between

- Memory address area and
- I/O address area.

Different read/write signals (I/O WR, I/O RD, MEMR, MEMR) are used to reference these areas. The following tables will give you an overview of the address areas used. Please refer to the descriptions of the individual functional groups for more details.

Functional Principle of the Memory Decoding

The Pentium II CPU has a memory address area of 64 Gbytes, of which 4GBytes can be used. The CPU has 64 data lines, 33 address lines and 8 byte lines (BE0 ... BE7), which encode the unavailable address lines A0, A1 and A2.

The CPU address bus is mapped via the PAC (System Controller) on the PCI address bus. The memory addresses of addresses 0000 0000h to 0009 FFFFh (640kByte) and addresses 0010 0000h to 2FFF FFFFh (768MByte) are excluded here.

The ISA bridge PIIX (PCI ISA IDE Xcellerator) precisely maps the ISA address bus once on the PCI address bus. The ISA address bus for 8 bit modules includes the address area from A0 to A19, which corresponds to the CPU addresses 0000 0000h to 000F FFFFh (1MByte).

For 16Bit ISA modules, the address bus is expanded by the address lines A20...A23, and therefore addresses 0000 0000h to 00FF FFFFh (16MByte). The distinction between the 1MByte and the 16MByte ISA address area is made by special Memory–Read/Write signals, which are only activated if the address lines A20, A21, A22 and A23 have a logical zero level.

If address ranges which are occupied by the main memory or PCI bus are addressed by the CPU, no ISA bus control signals are generated, i.e. an ISA bus unit is not addressed in these memory areas. Conversely, an ISA busmaster cannot reach addresses above 16MByte. In order to obtain a larger address area for dual-port RAM expansions than the memory address area between 640kByte and 1MByte, various decoding holes are provided in the Pentium PU basic board:

- The CPU address area FFF0 0000h to FFFD FFFFh (1024k–128 k BIOS = 896 kByte) is mapped in the ISA address area 00F0 0000h to 00FD FFFFh and is always addressed in the CPU address area. The decoding of the address lines A24 to A31 missing on the ISA bus is effected by special hardware on the basic board.
- The CPU address area 00F0 0000 to 00FF FFFF is mapped in the ISA address area 00F0 0000 to 00FF FFFF (16 MByte memory window). This setting can be toggled on or off in setup.

Assignments of the Memory Addresses

From Address	To Address	Size	Assignment	Remark
0000 0000	0007 FFFF	512k	Conventional system memory	
0008 0000	0009 FBFF	127k	Conventional system memory extended	
0009 FC00	0009 FFFF	1k	Conventional system memory extended BIOS data	
000A 0000	000A FFFF	64k	Graphics refresh memory	VGA
000B 0000	000B 7FFF	32k	SW graphics/text screen refresh memory	free
000B 8000	000B FFFF	32k	Graphics refresh memory	VGA/CGA
000C 0000	000C AFFF	44k	VGA-BIOS expansion	VGA
000C B000h	000CB FFFh	4k	Motherboard resources	
000E 0000h	000F FFFFh	128k	System disk expansion for Plug and Play BIOS	
0010 0000h	03FF FFFFh	63M	System disk expansion for Plug and Play BIOS	
0810 0000h	0810 0FFFh	4k	Texas Instruments PCI-1225	Cardbus Controller
0810 1000h	0810 1FFFh	4k	Texas Instruments PCI-1225	Cardbus Controller
0900 0000h	0A0F FFFFh	17M	Intel 82443BX Pentium® II Processor / AGP Controller	
0D00 0000h	0DFF FFFFh	16M	Chips and Tech. 69000 PCI	VGA
0E00 0000h	0E03 FFFFh	256k	Chips and Tech. 69000 PCI	VGA
F400 0000h	F407 FFFFh	512k	CP5611 (PCI)	
F408 0000h	F408 007Fh	8k	CP5611 (PCI)	
F800 0000h	FBFF FFFFh	64M	Intel 82443BX Pentium® II Processor / PCI bridge	
FFFE 000h	FFFF FFFFh	128k	Motherboard resources	Mirroring of the system BIOS (from 000E 0000 - 000F FFFF)

This list is not absolute, since Windows allocates the resources. It is therefore altogether possible that other addresses are occupied in some cases.
The assignment used can be found in the WINDOWS “resource report”.

I/O Adress Assignment

Address from	to	Assignment	Remark
0000	000F	DMA controller 1	
0020	0021	Interrupt controller 1	
0024	003D	Motherboard resources	
0040	0043	Timer 1	
0060	0060	Keyboard controller data	
0061	0061	NMI, speaker control	
0064	0064	Keyboard controller, CMD/STATUS	
0070	0070	Real Time Clock-Index	
0071	0071	Real Time Clock Date	
0072	0077	CMOS-RAM / Keyboard	
0078	0079	Reserved, board configuration	
0080	008F	DMA page register	
00A0	00A1	Interrupt controller 2	
00A4	00B9	Motherboard resources	
00C0	00DF	DMA controller 2	
00F0	00FF	Numeric processor	
0170	0177	Secondary IDE channel	Can be deactivated
01F0	01F7	Primary IDE channel	
0200	0203	Reserved for game port, otherwise free, joystick	Reserved/ free
0220	022F	ESS SOLO -1 DOS emulation	Sound
02F8	02FF	COM2	Can be deactivated
0300	031F	Programming interface	Can be deactivated
0330	0331	ESS SOLO -1 DOS emulation	Sound
0370	0370	Super IO	
0371	0371	Index / Data	
0376	0376	Second IDE channel, command	Can be deactivated
0377	0377	Second IDE channel, status	Can be deactivated
0378	037F	LPT 1	Can be deactivated
0388	038B	ESS SOLO -1 DOS emulation	Sound
03B0	03BB	VGA	Chips and Tech. 69000
03C0	03DF	VGA	Chips and Tech. 69000
03F0	03F5	FD controller	
03F6	03F6	First IDE channel, command	
03F7	03F7	First IDE channel, status	
03F8	03FF	COM 1	Can be deactivated
04D0	04D1	Motherboard resources	
0CF8	0CFF	PCI bus	PCI BUS

I/O Address Assignments

Address from	to	Assignment	Remark
1000	103F	PIIX IO	
1040	104F	PIIX Power management	
1050	1057	First IDE Controller (Dual FIFO)	
1058	105F	Second IDE Controller (Dual FIFO)	
1060	107F	PCI/USB Universal Host Controller	
1080	10E7	ESS SOLO -1 Audio Device	Sound

DMA Assignments

DMA Channel	Data Transfer	Description
0	8 / 16 bits	Free
1	8 / 16 bits	Free
2	8 / 16 bits	Floppy
3	8 / 16 bits	Free
4		Cascading of DMA controllers
5	16 bits	Free
6	16 bits	Free
7	16 bits	Free

8.4 Interrupt Assignments

Interrupt Assignment

In the SIMATIC Box PC 620, the 16 hardware interrupts (IRQ 0 to IRQ 15) are processed by two integrated interrupt controllers of the type 82C59.

The INT output of the slave controller is connected to the IRQ 2 input of the master controller. Interrupt 9 (IRQ 9) can be used on the bus for the assigned interrupt 2 (IRQ 2). In the initialization phase, IRQ is programmed for the software interrupt vector 0A H (IRQ 2) by the ROM-BIOS.

Priority

The interrupts are priority-scheduled in the reverse order of their numbering. Interrupt IRQ 0 has the highest priority and interrupt IRQ 7 the lowest. For triggering IRQ 2, interrupt IRQ 8 has the highest priority and interrupt IRQ15 the lowest. Interrupts IRQ 8 to IRQ 15 therefore have priority over interrupts IRQ 3 to IRQ 7. The interrupt vectors are initialized and masked when the SIMATIC Box PC 620 is powered up.

I/O Adresses of the Interrupt Controllers

Interrupt	Assignment	Parameterized interrupt vector, memory address
SMI	System management interrupt, cannot be masked	-
NMI	Expansion slots Signal IO Channel Check2	INT 2 H
IRQ 0	Interner Timer (system clock)	INT 8 H
IRQ 1	Keyboard	INT 9 H
IRQ 2	Cascaded (slave interrupt controller)	INT A H
IRQ 3 *)	Serial port 2 (COM2/ IRDA) [can be cleared in setup]	INT B H
IRQ 4 *)	Serial por 1 (COM1/TTY) [can be cleared in setup]	INT C H
IRQ 5 **)	Cardbus Controller	INT D H
IRQ 6 *)	Floppy Controller	INT E H
IRQ 7 *)	Parallel Port 1 (parallel printer port LPT1/EPP/ECP) [can be cleared in setup]	INT F H
IRQ 8	Battery-backed real-time clock (RTC)	INT 70 H
IRQ 9	VGA controller [generally not used]	INT 71 H
IRQ 10	Cardbus controller	INT 72 H
IRQ 11 *)	Safecard On Motherboard	INT 73 H
IRQ 12 *)	PS/2 mouse or trackball in keyboard. Can be cleared in setup, if the mouse or trackball function is not required.	INT 74 H
IRQ 13	Math. Coprozessor error	INT 75 H
IRQ 14	IDE-Interface (primary)	INT 76 H
IRQ 15 *)	IDE-Controller (secondary)	INT 77 H

Do not use interrupts already assigned in the system.

*) These components can be disabled via the BIOS Setup. The functions are then no longer available and the resources freed for other components.

**) The onboard port is Plug and Play capable, the occupied resources are administered by the BIOS.

8.5 Video Modes

Mode No. (hex)	VESAMode No.	Video Mode (Text/Graphics) (L) = Linear Mode	Colors	CRT (I) = Interlaced	LCD/Simultan
00+/01+	--	Text 40x25	16	70Hz	60Hz
02+/03+	--	Text 80x25	16	70Hz	60Hz
04/05	--	size 320x200	4	70Hz	60Hz
6	--	size 640x200	2	70Hz	60Hz
07+	--	Text 80x25	2 (sw)	70Hz	60Hz
0D	--	size 320x200	16	70Hz	60Hz
0E	--	size 640x200	16	70Hz	60Hz
0F	--	size 640x350	2 (sw)	70Hz	60Hz
10	--	size 640x350	16	70Hz	60Hz
11	--	size 640x480	2 (sw)	60Hz	60Hz
12	--	size 640x480	16	60Hz	60Hz
13	--	size 320x200	256	70Hz	60Hz
20	120h	size 640x480 (L)	16	60/75/85	60Hz
22	122h	size 800x600 (L)	16	56/60/75/85	60Hz
24	124h	size 1024x768 (L)	16	43(I)/60/75/85	60Hz
28	128h	size 1280x1024 (L)	16	43(I)/60	60Hz
30	101h	size 640x480 (L)	256	60/75/85	60Hz
31	100h	size 640x400 (L)	256	70	60Hz
32	103h	size 800x600 (L)	256	56/60/75/85	60Hz
34	105h	size 1024x768 (L)	256	43(I)/60/75/85	60Hz
38	107h	size 1280x1024 (L)	256	43(I)/60	60Hz
40	110h	size 640x480 (L)	32K	60/75/85	60Hz
41	111h	size 640x480 (L)	64K	60/75/85	60Hz
42	113h	size 800x600 (L)	32K	56/60/75/85	60Hz
43	114h	size 800x600 (L)	64K	56/60/75/85	60Hz
44	116h	size 1024x768 (L)	32K	43(I)/60/75/85	60Hz
45	117h	size 1024x768 (L)	64K	43(I)/60/75/85	60Hz
50	112h	size 640x480 (L)	16M	60/75/85	60Hz
52	115h	size 800x600 (L)	16M	56/60/75/85	60Hz
64	104h	size 1024x768	16	43(I)/60/75/85	60Hz
68	106h	size 1280x1024	16	43(I)/60	60Hz
6A	102h	size 800x600	16	56/60/75/85	60Hz
70	101h	size 640x480	256	60/75/85	60Hz
71	100h	size 640x480	256	70	60Hz
72	103h	size 800x600	256	56/60/75/85	60Hz
74	105h	size 1024x768	256	43(I)/60/75/85	60Hz
78	107h	size 1280x1024	256	43(I)/60	60Hz

8.6 Monitoring functions

The LEDs described in the following passages exist only for specific device models. The basic model of the Box PC 620 has no LEDs. The hardware signals are described in Section 8.7.2.

8.6.1 Overview

Function

The following individual functions are implemented:

- Temperature monitoring and excess/insufficient temperature indication
- Watchdog

Messages from the monitoring modules can be transferred to applications.

The program SOM (Safecard On Motherboard) as well as drivers for Windows are available on the units for this. The status can be displayed or limits parameterized thereby.

You will find a description of the drivers and the SOM program on the *Documentation and Drivers* CD in the \Drivers.*\Safeonbo.ard directory.

8.6.2 Signals on the Front Interface

The meaning of the indicators is as follows:

LED	OFF	GREEN	RED
Run	Watchdog not active	Watchdog active	Watchdog executed
Temp	System switched off	Inside temperature normal	Inside temperature outside the permissible range.

8.6.3 Temperature Monitoring/Indication

Temperature Monitoring

The temperature is measured by means of three temperature sensors. One sensor monitors the processor temperature, the second the temperature in the area of the processor module and the expansion cards and the third the temperature in the area of the power supply unit.

- If the temperature near the power supply exceeds 45°C (fixed value), the fan is set to maximum rpms. To activate this feature, the setting “Fan Control” has to be turned on in the Setup menu (Sec. 6.1.4).
- If the temperature exceeds one of the three temperature values of the set thresholds, a temperature error is registered with the following effects:

Reaction	Option
Temp LED from GREEN to RED	always
Fan goes to maximum rpms.	always
The processor speed is reduced [1]	always
Initiate IRQ	adjustable

Temperature errors do not occur during the normal approved use of the device. If a temperature error occurs, check the following possible causes:

- Are the ventilation slots blocked?
- Is the fan working?
- Is the ambient temperature higher than the allowed value?
- Has the total capacity for the power supply been exceeded?

The temperature error remains saved until the temperature thresholds are again exceeded and are reset by one of the following measures:

- Acknowledge the error message via the SOM program
- Restarting the device.

[1] The lower processor speed can affect how programs run.

8.6.4 Watchdog (WD)

Function

The watchdog monitors the execution of a program. The purpose of the WD is to notify the user of a program crash through various reactions.

The watchdog is idle when the PC is switched on or after a HW-RESET(cold start), i.e. no reaction of the WD will be triggered and the RUN LED is switched off. If the watchdog is activated (by driver or SOM program) the Run LED is green.

WD Reactions

If the WD is not triggered again within the set time (by driver or SOM program), the following reactions are initiated:

Reaction	Option
RUN LED switches from green to red	always
Acknowledge WD	always
Initiate reset of the PC	adjustable
Shut down IRQ on the PC	adjustable
SOM application is displayed	adjustable

The reactions which are to be triggered can be parameterized by driver or SOM program.

WD Monitoring Times TWD

The monitoring times are adjustable in increments of one second in a range from 3 to 255 seconds.

Note

If the watchdog time is changed after the watchdog was activated (i.e. while the watchdog is running), the watchdog is retriggered!

8.7 Ports

The following ports are available on the motherboard of the SIMATIC Box PC 620:

- External ports for the connection of external devices
- Interfaces for the connection of display devices
- Ports for internal connections (drives, bus boards etc.)

The connector assignments of the individual ports are described in the following chapters.

8.7.1 External Ports

Port	Position	Connector	Description
COM1	external	X9	3F8h-3FFh, can be disabled IRQ4, edge-triggered 25 pin, socket, V.24/V.28 and 20mA (TTY potentially isolated)
COM2	external	X11	2F8h-2FFh, can be disabled IRQ3, edge-triggered 9 pin, standard connector
LPT1	external	X9	378h-37Fh, can be disabled IRQ7, edge-triggered 25 pin, standard socket
PS/2 mouse	external	X7	060h-064h IRQ12, edge-triggered 6 pin, mini DIN socket
PS/2 keyboard/ keyboard with trackball	external	X6	060h-064h IRQ1, edge-triggered 6 pin, mini DIN socket
USB	external	X40	First USB channel, additional internal second USB channel for front interface
MPI /DP12	external	X800	can be disabled IRQ5, edge-triggered 9 pin, standard socket, potentially isolated port
Ethernet	external	X805	RJ45
VGA	external	X11	3B0h-3BFh, 3C0h-3CFh, 3D0h-3DFh, can be disabled IRQ9, edge-triggered 15 pin, standard socket
PCCard/CardBus port	external	X600	3E0h-3E1h 100 pin SMD plinth

Serial Port COM1 (PLC/V.24/Modem) *

The serial port (COM 1) on the SIMATIC Box PC 620 has the following pinout:

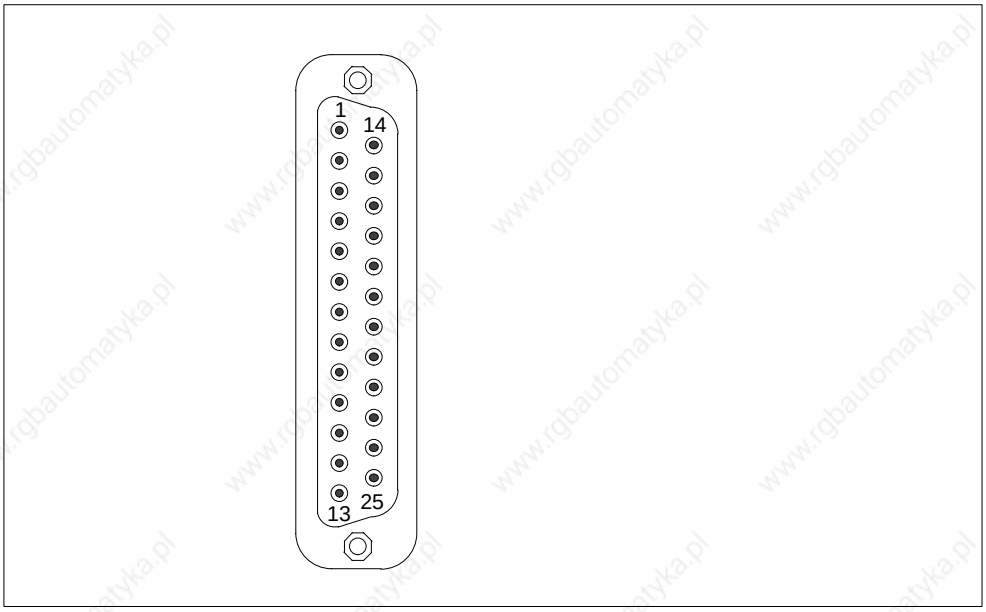

Figure 8-1 COM 1 Serial Port (Socket Connector)

Pin No.	Designation	Description	Input /Output
2	TxD (D1)	Serial transmit data	Output
3	RxD (D2)	Serial receive data	Input
4	RTS (S2)	Request to send	Output
5	CTS (M2)	Clear to send	Input
6	DSR (M1)	Data set ready	Input
7	GND (E2)	Functional ground (reference potential)	-
8	DCD (M5)	Data carrier detect	Input
9	+TTY RxD	TTY receive	Input
10	-TTY RxD	TTY receive	Input
18	+TTY TxD	TTY send	Output
19	+20mA	Isolated current source	-
20	DTR (S1)	Data terminal ready	Output
21	-TTY TxD	TTY send	Output
22	RI (M3)	Incoming call	Input
1	-	Shield	-
11-17	-	Unassigned	-
23-25	-	Unassigned	-

* Without TTY for the basic variant of the Box PC

Gender Changer for COM1

You can convert the COM1/V24 / AG port of the SIMATIC PC family into the usual 25 pin male connector by means of the enclosed gender changer (25 pin / 25 pin). For this, you only have to plug the gender changer onto the COM1 socket and secure it with the two hexagon head screws.

Pin No.	Description	Route	Pin No.	Description	Route
1	Screen	Ground	14	not assigned	
2	Transmitted data (TxD/D1)	Output	15	not assigned	
3	Received data (RxD/D2)	Input	16	not assigned	
4	Switch on sender (RTS/S2)	Output	17	not assigned	
5	Ready to transmit status (CTS/M2)	Input	18	+transmitted TTY data (TxD)	Output
6	Readiness for operation (DSR/M1)	Input	19	voltageless power source	positiv potential
7	Functional ground (GND/ E2)	Ground	20	Terminal ready (DTR/S1)	Output
8	Receiving signal carrier (DCD/M5)	Input	21	-transmitted TTY data (TxD)	Output
9	+received TTY data (RxD)	Input	22	Incoming call (RI/M3)	Input
10	-received TTY data (RxD)	Input	23	not assigned	
11	not assigned		24	not assigned	
12	not assigned		25	not assigned	
13	not assigned		Housing	Ground	

The V24 and TTY interfaces for COM1 can be alternately used. The factory set default value is V24 operation. Switching from V24 to TTY operation is described in Section 6.1.2.

Serial Port COM2 (V24/Mouse)

The serial port (COM 2) on the SIMATIC Box PC 620 has the following pinout:

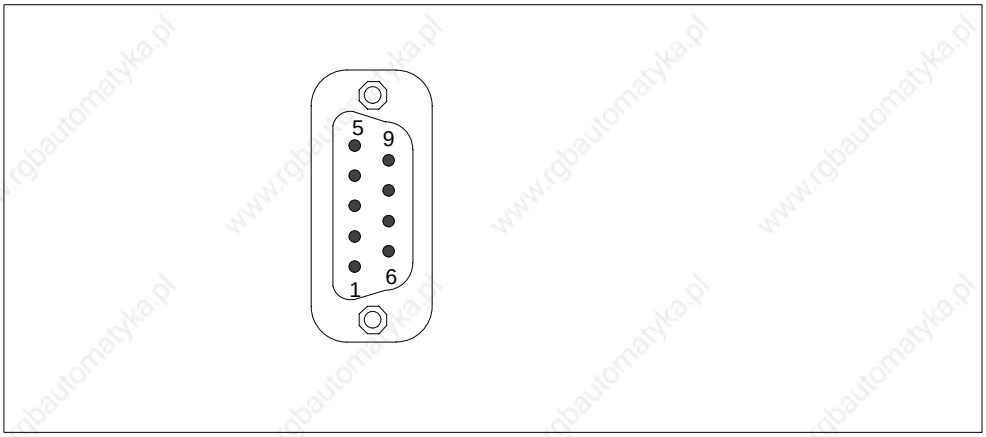

Figure 8-2 Serial Port COM 2 (Connector)

Pin No.	Designation	Description	Input /Output
1	DCD (M5)	Receiving signal level	Input
2	RxD (D2)	Received data	Input
3	TxD (D1)	Transmitted data	Output
4	DTR (S1)	Terminal ready	Output
5	GND (E2)	Functional ground	-
6	DSR (M1)	Readiness for operation	Input
7	RTS (S2)	Switch on transmitter	Output
8	CTS (M2)	Ready to transmit status	Input
9	RI (M3)	Incoming call	Input

Parallel Port LPT1

The parallel port (LPT 1) on the SIMATIC Box PC 620 has the following pinout:

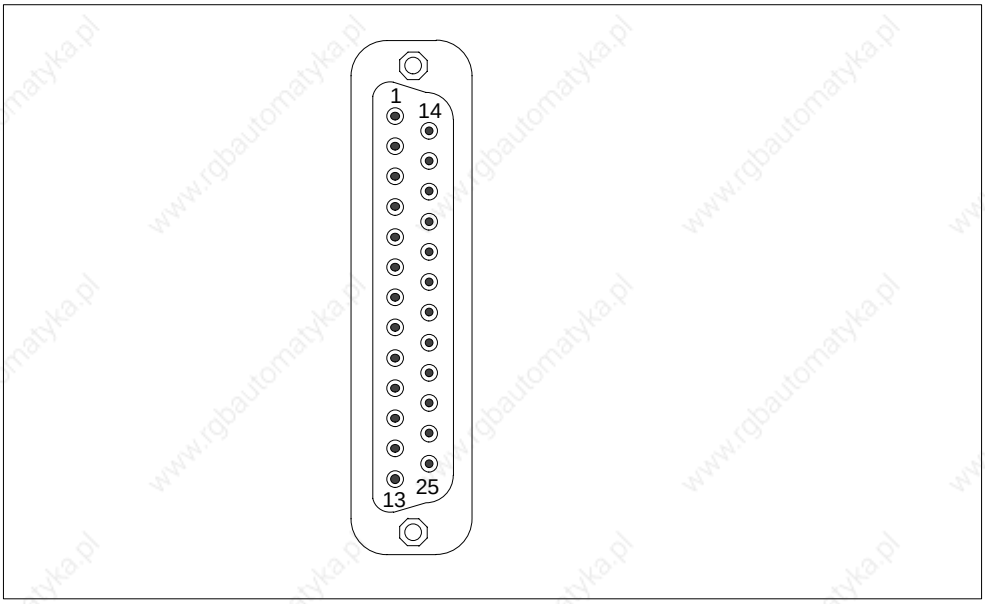

Figure 8-3 Parallel Port LPT 1 (Socket)

Pin No.	Signal Designation	Input /Output
1	/ Strobe (CLK)	Output (open collector)
2	Data - Bit 0	Output (TTL level)
3	Data - Bit 1	Output (TTL level)
4	Data - Bit 2	Output (TTL level)
5	Data - Bit 3	Output (TTL level)
6	Data - Bit 4	Output (TTL level)
7	Data - Bit 5	Output (TTL level)
8	Data - Bit 6	Output (TTL level)
9	Data - Bit 7	Output (TTL level)
10	/ACK (Acknowledge)	Input (4,7 kΩ pull up)
11	BUSY	Input (4,7 kΩ pull up)
12	PE (PAPER END)	Input (4,7 kΩ pull up)
13	SELECT	Input (4,7 kΩ pull up)
14	/ AUTO FEED	Output (open collector)
15	/ ERROR	Input (4,7 kΩ pull up)
16	/ INIT	Output (open collector)
17	/ SELECT IN	Output (open collector)
18	GND	-
:	:	:

PS/2 Mouse Port

You can connect an external PS/2 mouse to your SIMATIC Box PC 620.
The connector has the following pinout:

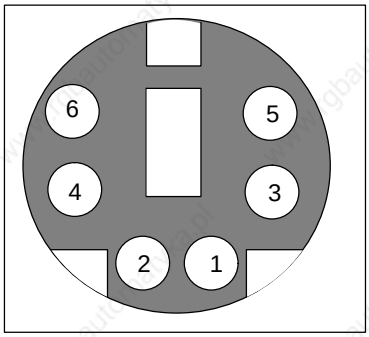

View of socket connector

Figure 8-4 Connector Pinout for a PS/2 Mouse

Pin No.	Designation	Input /Output
1	Data line	Input/Output
2	Unassigned	-
3	0 V	-
4	Current limited 5V power supply	Output
5	Clock line	Input/Output
6	Unassigned	-

PS/2 Keyboard with Trackball Port

You can connect an external keyboard to your SIMATIC Box PC 620.
The connector has the following pinout:

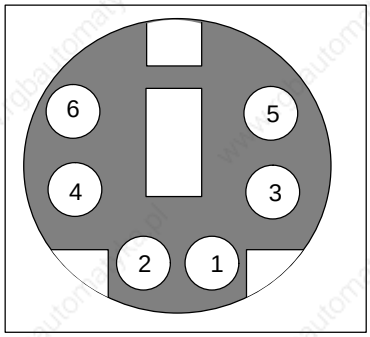

View onto the socket

Figure 8-5 Connector Pinout for an External Keyboard Connecting Cable

Pin-No.	Designation	Input/Output
1	Data line, keyboard	Input/output
2	Data line	Input/output
3	0V	-
4	Current limited 5V power supply	Output
5	Clock line, keyboard	Input/output
6	Clock line, trackball	Input/output

USB Port

The Universal Serial Bus port has the following pinout:

	Contact Number	Signal Name	Meaning
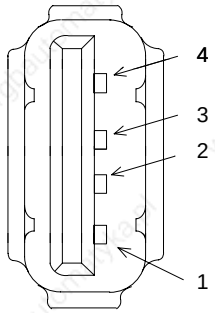	1	VCC	
	2	- Data	
	3	+ Data	
	4	Ground	

The connector is of type A.

The port is rated as a high current USB (500mA).

MPI/DP Socket Connector *

The MPI/DP socket connector on the SIMATIC box PC 620 has the following pinout:

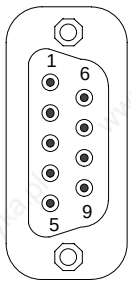

Figure 8-6 MPI/DP Socket Connector

Pin No.	Designation	Description	Input/output
1	NC	Pin 1 is not assigned	-
2	NC	Pin 2 is not assigned	-
3	LTG_B	Signal line B of MPI module	Input/output
4	RTS_AS	RTSAS, control signal for received data stream. The signal is “1” active when the programmable controller is sending.	Input
5	M5EXT	M5EXT return line (GND) of the 5 V power supply. The current load caused by an external user connected between P5EXT and M5EXT must not exceed max. 90 mA.	Output
6	P5 EXT	P5EXT power supply (+5 V) of the 5 V power supply. The current load caused by an external user connected between P5EXT and M5EXT must not exceed max. 90 mA.	Output
7	NC	Pin 7 is not assigned	-
8	LTG_A	Signal line A of the MPI module	Input/output
9	RTS_PG	RTS output signal of the MPI module. The control signal is “1” when the programming device is sending.	Output
Screen		on connector casing	

* Not available for the basic variant of the Box PC

Ethernet RJ45 Connection

Pin no.	Meaning
1	TD+
2	TD–
3	RD+
4, 5 *	internally terminated
6	RD–
7, 8 *	internally terminated
LED yellow	Link
LED green	Activity

* is not required for data transfer

VGA Socket Connector

The VGA socket connector on the SIMATIC Box PC 620 has the following pinout:

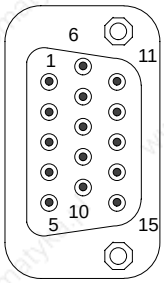

Figure 8-7 VGA Socket Connector

Pin No.	Designation	Description	Input/Output
1	R_EXT	Red	Output
2	G_EXT	Green	Output
3	B_EXT	Blue	Output
4	-	NC	-
5	M	Ground	Ground
6	M	Ground	Ground
7	M	Ground	Ground
8	M	Ground	Ground
9	-	NC	-
10	M	Ground	Ground
11	-	NC	-
12	-	NC	-
13	EXT_H	Horizontal sync	Output
14	EXT_V	Vertical sync	Output
15	-	NC	-

8.7.2 Assignment of the Front Ports on the Motherboard

Port	Position	Connector	Description
Display (CMOS)	Internal	X420	Connection of LC displays with CMOS port
Display (LVDS)	Internal	X400	Connection of LC displays with single chip LVDS port
Plug&Display	Internal	X410/ X411	Port for optional connectable Plug&Display module
I/O Front	Internal	X44	Port for front Front I/O
COM2	Internal	X26	Internal COM2 port

Display Port (CMOS, X420)

D-STN and TFT displays with 5V CMOS port and VGA resolution (640x480) can be connected to this port. The display is selected and the D-STN/TFT signals allocated automatically in accordance with the coding of the Display Select inputs. The maximum cable length is 50 cm with a display clock rate of 25 MHz.

Pin	Signal DSTN	Meaning DSTN	Pin	Signal TFT	Meaning TFT
1	P5V_D_fused	+5V (fused) Display VCC	1	P5V_D_fused	+5V (fused) Display VCC
2	P5V_D_fused	+5V (fused) Display VCC	2	P5V_D_fused	+5V (fused) Display VCC
3	GND		3	GND	
4	CLK	Shift Clock	4	CLK	Shift Clock
5	GND		5	GND	
6	LP	Horizontal Sync	6	HSync	Horizontal Sync
7	FP	Vertical Sync	7	VSync	Vertical Sync
8	-	-	8	R0	Signal Red Bit 0 (LSB)
9	-	-	9	R1	Signal Red Bit 1
10	UD6	Upper Data Bit 6	10	R2	Signal Red Bit 2
11	GND		11	GND	
12	UD7	Upper Data Bit 7	12	R3	Signal Red Bit 3
13	UD2	Upper Data Bit 2	13	R4	Signal Red Bit 4
14	UD3	Upper Data Bit 3	14	R5	Signal Red Bit 5 (MSB)
15	GND		15	GND	
16	UD1	Upper Data Bit 1	16	G0	Signal Green Bit 0 (LSB)
17	UD0	Upper Data Bit 0	17	G1	Signal Green Bit 1
18	LD3	Lower Data Bit 3	18	G2	Signal Green Bit 2
19	GND		19	GND	
20	LD2	Lower Data Bit 2	20	G3	Signal Green Bit 3
21	LD1	Lower Data Bit 1	21	G4	Signal Green Bit 4
22	LD0	Lower Data Bit 0	22	G5	Signal Green Bit 5 (MSB)
23	GND		23	GND	
24	UD5	Upper Data Bit 5	24	B0	Signal Blue Bit 0 (LSB)
25	UD4	Upper Data Bit 4	25	B1	Signal Blue Bit 1
26	LD7	Lower Data Bit 7	26	B2	Signal Blue Bit 2
27	GND		27	GND	
28	LD6	Lower Data Bit 6	28	B3	Signal Blue Bit 3
29	LD5	Lower Data Bit 5	29	B4	Signal Blue Bit 4
30	LD4	Lower Data Bit 4	30	B5	Signal Blue Bit 5 (MSB)
31	VCON	Contrast voltage	31	-	-
32	M	Data enable	32	ENAB	Data enable
33	DispOn	Display On	33	DispOn	Display On
34	Res.	Reserved	34	Res.	Reserved

Display Port (LVDS), X400

TFT displays with an LVDS port can be connected to this port. The connection of 18 bit displays up to a resolution of 1024x768 pixels is possible. The permissible display clock rate is 20MHz to 66Mhz. The display is selected automatically in accordance with the coding of the Select Inputs display. The display supply voltages (3.3V and 5V) are connected via the graphic controller, dependent on the-requirements of the connected displays. The maximum cable length is 50cm with a transmission rate of 455MHz. Special cable properties are to be considered for the pair of differential cables in accordance with the LVDS specification.

Pin No.	Signal	Meaning
1	P5V_D_fused	+5V (fused) Display VCC
2	P5V_D_fused	+5V (fused) Display VCC
3	RXIN0–	LVDS Input signal Bit 0 (-)
4	RXIN0+	LVDS Input signal Bit 0 (+)
5	P3V3_D_fused	+3,3V (fused) Display VCC
6	P3V3_D_fused	+3,3V (fused) Display VCC
7	RXIN1–	LVDS Input signal Bit 1 (-)
8	RXIN1+	LVDS Input signal Bit 1 (+)
9	GND	
10	GND	
11	RXIN2-	LVDS Input signal Bit 2 (-)
12	RXIN2+	LVDS Input signal Bit 2 (+)
13	GND	
14	GND	
15	RXCLKIN-	LVDS clock pulse (-)
16	RXCLKIN+	LVDS clock pulse (+)
17	GND	
18	GND	
19	Reserved	
20	Reserved	

Allocation of the Display to Display Select Pins

The automatic configuration of one of 15 possible displays is effected via the Display Select Inputs. The Display Select inputs are fitted with Pull-Up resistors, i.e. if these inputs are not connected, they have a high level. In order to generate a low level, the input must be connected to GND.

Nr.	LCD_SEL3	LCD_SEL2	LCD_SEL1	LCD_SEL0	Display Type
0	low	low	low	low	reserved
1	low	low	low	high	reserved
2	low	low	high	low	640 x 480 (VGA), D-STN, 16 bit
3	low	low	high	high	reserved
4	low	high	low	low	640 x 480 (VGA), TFT, 18 bit
5	low	high	low	high	reserved
6	low	high	high	low	1024 x 768 (XGA), TFT, 18 bit
7	low	high	high	high	800 x 600 (SVGA), TFT, 18 bit
8	high	low	low	low	reserved
9	high	low	low	high	reserved
10	high	low	high	low	reserved
11	high	low	high	high	reserved
12	high	high	low	low	reserved
13	high	high	low	high	reserved
14	high	high	high	low	reserved
15	high	high	high	high	No display / DDC selected display

I/O Port for Front Control Elements

All the signals in addition to the Display and COM2 port which are necessary for the connection of front control elements are applied to this port. The maximum cable length is 50cm with a USB data transfer rate of 12MBaud.

Pin No.	Signal Name	Remark
1	GND	
2	P12V	Power supply for inverter (max. 0.6A)
3	BL_ON	Backlight on (5V..12V = On)
4	P5V_fused	+5V VCC (fused)
5	GND	
6	P3V3_fused	+3,3V VCC (fused)
7	K_CLK	Keyboard Clock
8	K_DATA	Keyboard Data
9	M_CLK	Mouse Clock
10	M_DATA	Mouse DATA
11	P5V_fused	+5V VCC (fused)
12	USB_D1M	USB Data- channel 1
13	USB_D1P	USB Data+ channel 1
14	GND	GND
15	LCD_SEL0	Display Type-Select Signal 0
16	LCD_SEL1	Display Type-Select Signal 1
17	LCD_SEL2	Display Type-Select Signal 2
18	LCD_SEL3	Display Type-Select Signal 3
19	RESET_N	Reset signal (low active)
20	SPEAKER	Connection for system speaker
21	HD_LED	HD LED, anode with 1kΩ in series on motherboard
22	DP_LED	MPI/DP LED, anode above 1kΩ in series on motherboard
23	Ethernet_LED	Ethernet LED, anode above 1kΩ in series on motherboard
24	TEMP_ERR	LED temperature error, anode with 1kΩ in series on motherboard
25	RUN_R	LED watchDog error, anode with 1kΩ in series on motherboard
26	RUN_G	LED watchdog o.k., anode with 1kΩ in series on motherboard

Internal Serial Port COM2 (V.24), X26

This port is connected in parallel to the external COM2 port. Both ports can therefore only be used alternatively. The assignment is executed in such a way that a 1:1 connection to a 9 pin subminiature Cannon socket can be made when using insulation piercing connecting devices. The maximum cable length is 100cm with a data transfer rate of 9.6 kBaud.

Pin no.	Signal	Meaning
1	DCD	Receiving signal level (E)
2	DSR	Readiness for operation (E)
3	RxD	Received data (E)
4	RTS	Switch on transmitter (A)
5	TxD	Transmitted data (S)
6	CTS	Ready to transmit status (E)
7	DTR	Terminal ready (S)
8	RI	Incoming callf (E)
9	GND	GND
10	P5V	+5V power supply

8.7.3 Assignment of the Internal Ports on the Motherboard

Port	Position	Connector	Description
Memory	internal	X19, X20	2 SO-DIMM slot, 64Bit
Processor	internal	X12	Socket for MMC2 mobile processor
Bus extender	internal	X1	Socket for bus extender, assigned with ISA and PCI bus signals
Power supply	internal	X14	40 pin connector for DC signals
Floppy	internal	X5	two drives are possible (82078 compatible) 360kB, 720kB, 1.2MB, 1.44MB 3F0h-3F7h, 370h-377h, can be disabled IRQ 6, edge-triggered 26 pin, socket for flex-lead (notebook connection)
3.5” hard disk	internal	X41	170h-177h, 1F0h-1F7h, can be disabled IRQ14, IRQ15, edge-triggered 40 pin, 2.54mm male connector (3.5” HD, primary), a maximum of two drives are operable
2.5” hard disks	internal	X4	170h-177h, 1F0h-1F7h, can be disabled IRQ14, IRQ15, edge-triggered 44 pin, 2mm male connector (2.5” HD, primary), a maximum of two drives are operable

CD ROM	internal	X3	170h-177h, 1F0h-1F7h, can be disabled IRQ14, IRQ15, edge-triggered 44 pin, 2mm male connector (CD ROM, secondary slave with connected LS120, otherwise secondary master), a maximum of one drive is operable
LS120	internal	X31	170h-177h, 1F0h-1F7h, can be disabled IRQ14, IRQ15, edge-triggered 1x41 pin (Hirose DF9-41, (LS120, secondary master with connected drive), for use with flex-lead from PG740) a maximum of one drive is operable
RS485 Hybrid *	internal	X503/ X504	Connection for RS485 hybrid (physical interface for MPI/DP port
TTY transmitter*	internal	X17	Connection for TTY transmitter hybrid (physical interface)
TTY receiver *	internal	X18	Connection for TTY receiver hybrid (physical interface)
PS connection for 3.5” hard disk	internal	X25	Power supply for 3.5” hard disk, 4 pin, male connector
PS connection for CPU fan	internal	X28	Power supply for CPU fan, 2 pin, male connector
PS connection for device fan	internal	X29	Power supply for device fan, 2 pin, male connector
Backup battery	internal	X24	Power supply for device fan, 2 pin, male connector

* Not available for the basic variant of the Box PC

Port to the Bus Unit (X1)

The SIMATIC Box PC 620 has a bus unit with a PCI slot and a shared ISA /PCI slot. Expansion cards can be installed to ISA specification (Rev. 3.1) and PCI specification (Rev. 2.0) with a maximum length of 265mm (175 mm for shared ISA/PCI modules). All the PCI slots can be used as masters. Only 5V PCI modules are operable.

The bus unit is executed as a purely passive module, i.e. there are only socket contacts for the expansion cards and any necessary backup capacitors. The power supply to the expansion cards is effected via the connection of the bus unit with the basic board. The -5V voltage is not provided for in the power supply and is produced from the -12V on the bus unit via in–phase voltage control.

The connection to the basic board is effected by a gold-plated two-part connector of the type ‘EISA’. All the necessary bus signals (ISA and PCI) are applied to this connector. The following table shows the connector assignment.

ISA Bus Signals								PCI Bus Signals							
	Signal		Signal		Signal		Signal		Signal		Signal		Signal		Signal
A	name	**B**	name	**C**	name	**D**	name	**E**	name	**F**	name	**G**	name	**H**	name
1	iochk#	1	gnd	1	sbhe#	1	memcs 16#	1	gnd	1	clk (slot3)	1	sdone	1	serr#
2	sd7	2	rstdrv	2	la23	2	iocs16 #	2	gnd	2	gnd	2	sbo#	2	ad15
3	sd6	3	+5V	3	la22	3	irq10	3	inta#	3	intc#	3	c/be1#	3	ad14
4	sd5	4	irq9	4	la21	4	irq11	4	intb#	4	intd#	4	par	4	ad12
5	sd4	5	-5V	5	la20	5	irq12	5	+5V	5	+5V	5	gnd	5	gnd
6	sd3	6	drq2	6	la19	6	irq15								
7	sd2	7	-12V	7	la18	7	irq14	7	+5V	7	+5V	7	gnd	7	gnd
8	sd1	8	0ws#	8	la17	8	dack0#	8	rst#	8	clk (slot 1)	8	ad13	8	ad10
9	sd0	9	+12V	9	memr#	9	drq0	9	gnt# (slot 1)	9	gnd	9	ad11	9	ad8
10	iochrdy	10	gnd	10	memw #	10	dack5#	10	req# (slot1)	10	gnt# (slot 2)	10	ad9	10	ad7
11	aen	11	smem w#	11	sd8	11	drq5	11	gnd	11	gnd	11	c/be0#	11	ad5
12	sa19	12	smemr #	12	sd9	12	dack6#	12	clk (slot 2)	12	req# (slot2)	12	ad6	12	ad3
13	sa18	13	iow#	13	sd10	13	drq6	13	gnd	13	ad31	13	ad4	13	ad1
14	sa17	14	ior#	14	sd11	14	dack7#	14	ad30	14	ad29	14	ad2	14	ad0
15	sa16	15	dack3#	15	sd12	15	drq7	15	Req_N 3	15	GNT_ N3				
16	sa15	16	drq3	16	sd13	16	+5V					16	+5V	16	+5V
17	sa14	17	dack1#	17	sd14	17	ma-ster#	17	+3,3V	17	+3,3V	17	+5V	17	+5V
18	sa13	18	drq1	18	sd15	18	gnd	18	ad28	18	ad27	18	gnd	18	gnd
19	sa12	19	re-fresh#					19	ad26	19	ad25	19	gnd	19	gnd
20	sa11	20	sysclk					20	ad24	20	c/be3#				
21	sa10	21	irq7					21	ad22	21	ad23				
22	sa9	22	irq6					22	ad20	22	ad21				
23	sa8	23	irq5					23	ad18	23	ad19				
24	sa7	24	irq4					24	+3,3V	24	+3,3V				
25	sa6	25	irq3												
26	sa5	26	dack2#					26	+3,3V	26	+3,3V				
27	sa4	27	t/c					27	ad16	27	ad17				
28	sa3	28	bale					28	frame#	28	irdy#				
29	sa2	29	+5V					29	c/be2#	29	dev-sel#				
30	sa1	30	osc					30	trdy#	30	lock#				
31	sa0	31	gnd					31	stop#	31	perr#				

DC Port of the Power Supply Units

The power supply unit has a connector (X2) through which all the signals on the DC side are connected with the motherboard.

Pin No.	Row A	Meaning	Pin No.	Row B	Meaning
1	PwrGood	Power Good Signal	1	PwrGood	Power Good Signal
2	TTY_VCC	Potential–free VCC (15V ± 3V) for TTY port	2	TTY_VCC	Potential–free VCC (15V ± 3V) for TTY port
3	TTY_GND	TTY_GND	3	TTY_GND	TTY_GND
4	NAU_N	Power failure early warning alarm	4	NAU_N	Power failure early warning alarm
5	GND	GND	5	GND	GND
6	P12V	+12V	6	P12V	+12V
7	V_DC	for processor module	7	V_DC	for processor module
8	N12V	-12V	8	N12V	-12V
9	GND	GND	9	GND	GND
10	GND	GND	10	GND	GND
11	P3V3	+3.3V	11	P3V3	+3.3V
12	P3V3	+3.3V	12	P3V3	+3.3V
13	GND	GND	13	GND	GND
14	GND	GND	14	GND	GND
15	GND	GND	15	GND	GND
16	GND	GND	16	GND	GND
17	P5V	+5V	17	P5V	+5V
18	P5V	+5V	18	P5V	+5V
19	P5V	+5V	19	P5V	+5V
20	P5V	+5V	20	P5V	+5V

Port to the Floppy Disk Drive (X5)

This port is intended for the connection of a notebook floppy disk drive. The maximum connection length of the data cable may not exceed 40cm.

Pin no.	Signal Name	Remark
1	P5V	
2	INDEX_N	
3	P5V	
4	DS_N0	
5	P5V	
6	DCHG_N	
7	n.c.	
8	n.c.	
9	HDOUT	
10	MOT_N0	
11	HDIN	
12	DIR_SL_N	
13	n.c.	
14	STEP_N	
15	GND	
16	WR_DAT_N	
17	GND	
18	WR_GAT_N	
19	EDOUT	
20	TRACK_N0	
21	EDIN	
22	WR_PRT_N	
23	GND	
24	RD_DAT_N	
25	GND	
26	SIDE_1_N	

Assignment of the IDE Ports (X3, X4, X41)

The primary IDE port is intended for the alternative installation of 2.5” and 3.5” hard disks. 3.5” drives are connected via a 40 pin 2.54mm latching connector, 2.5” drives via a 44 pin 2mm latching connector. The two connectors are connected in parallel. The secondary IDE port is intended for the optional connection of a CD ROM and / or an LS 120 drive. It is adaptable via a 44 pin 2mm latching connector. The maximum connection length of the data cables may not exceed 40cm.

Pin	X41	Meaning	Pin	X4/X3	Meaning
1	RESET	Reset	1	RESET	Reset
2	GND		2	GND	
3	D7	Data signal D7	3	D7	Data signal D7
4	D8	Data signal D8	4	D8	Data signal D8
5	D6	Data signal D6	5	D6	Data signal D6
6	D9	Data signal D9	6	D9	Data signal D9
7	D5	Data signal D5	7	D5	Data signal D5
8	D10	Data signal D10	8	D10	Data signal D10
9	D4	Data signal D4	9	D4	Data signal D4
10	D11	Data signal D11	10	D11	Data signal D11
11	D3	Data signal D3	11	D3	Data signal D3
12	D12	Data signal D12	12	D12	Data signal D12
13	D2	Data signal D2	13	D2	Data signal D2
14	D13	Data signal D13	14	D13	Data signal D13
15	D1	Data signal D1	15	D1	Data signal D1
16	D14	Data signal D14	16	D14	Data signal D14
17	D0	Data signal D0	17	D0	Data signal D0
18	D15	Data signal D15	18	D15	Data signal D15
19	GND		19	GND	
20	n.c.	Coding	20	n.c.	Coding
21	DREQ	DMA Request	21	DREQ	DMA Request
22	GND		22	GND	
23	IOW_N	IO Write	23	IOW_N	IO Write
24	GND		24	GND	
25	IOR_N	I/O Read	25	IOR_N	I/O Read
26	GND		26	GND	
27	IORDY	I/O Ready	27	IORDY	I/O Ready
28	Reserved		28	CSEL	Master/Slave
29	DACK_N	DMA Acknowledge	29	DACK_N	DMA Acknowledge
30	GND		30	GND	
31	IOCS16	I/O Chip Select 16	31	IOCS16	I/O Chip Select 16
32	n.c.		32	n.c.	
33	AD_1	Address 1	33	AD_1	Address 1
34	Reserved	reserved	34	reserved	reserved
35	AD_0	Address 0	35	AD_0	Address 0
36	AD_2	Address 2	36	AD_2	Address 2
37	CS1_N	Chip Select 1	37	CS1_N	Chip Select 1
38	CS3_N	Chip Select 3	38	CS3_N	Chip Select 3
39	HDACT_N	HD active	39	HDACT_N	HD active
40	GND		40	GND	
			41	P5V	+5V power supply
			42	P5V	+5V power supply
			43	GND	
			44	reserved	reserved

Connection for LS120 Drive (X31)

The optional LS120 drive is connected via this port. This port is connected in parallel with the secondary IDE port. The connected LS120 drive is automatically master (i.e. bootable drive) as the result of a special RC circuit. The maximum connection length of the data cable may not exceed 40cm.

Pin No.	X31	Meaning
1	RESET	Reset
2	GND	
3	D8	Data signal D8
4	D7	Data signal D7
5	D9	Data signal D9
6	D6	Data signal D6
7	D10	Data signal D10
8	D5	Data signal D5
9	D11	Data signal D11
10	D4	Data signal D4
11	D12	Data signal D12
12	D3	Data signal D3
13	D13	Data signal D13
14	D2	Data signal D2
15	D14	Data signal D14
16	D1	Data signal D1
17	D15	Data signal D15
18	D0	Data signal D0
19	GND	
20	DREQ	DMA Request
21	GND	
22	IOW_N	IO Write
23	GND	
24	IOR_N	I/O Read
25	GND	
26	IORDY	I/O Ready
27	Reserved	
28	DACK_N	DMA Acknowledge
29	TBD	
30	GND	
31	Reserved	reserved
32	IOCS16	I/O Chip Select 16
33	AD_2	Address 2
34	AD_1	Address 1
35	CS3_N	Chip Select 3
36	AD_0	Address 0
37	HDACT_N	HD active
38	CS1_N	Chip Select 1
39	TBD	
40	P5V	+5V power supply
41	P5V	+5V power supply

PS Connection for Hard Disk (X25)

The power supply of the 3.5” hard disk is effected via this connection.

Pin no.	Signal Name	Remark
1	P12V	+12 V
2	GND	GND
3	GND	GND
4	P5V	+5 V

Connection for CPU Fan and Device Fan (X28)

The CPU fan and the device fan are connected via these two connections.

Pin no.	Signal Name	Remark
1	12V thermostat-controlled	
2	0 V fan, switched	

Connection for Backup Battery (X42)

The battery for the standby supply to the CMOS RAM is connected to this connection. A 3.6 V lithium battery with a capacity of 750 mAh is used.

Pin no.	Signal Name	Remark
1	+	Positive pole
2	-	Negative pole

8.8 Bus Board

8.8.1 Design and Mode of Operation

The bus board is designed as a passive link between the motherboard and the expansion modules. It is mounted by means of two screws.

The bus board has two ISA slots and two PCI slots, as well as a shared ISA /PCI slot. The expansion modules are powered via the link between the bus board and the motherboard. An external power supply (+5V and +12V) is provided.

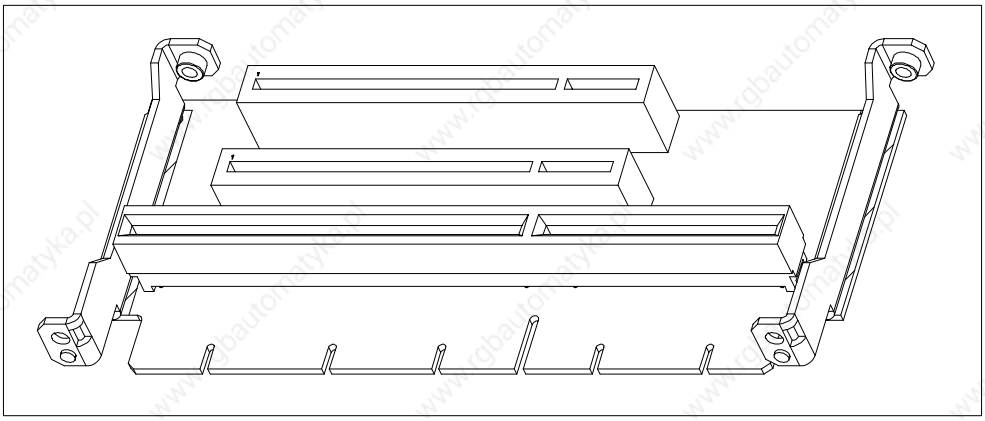

Figure 8-8 Bus Board

8.8.2 Interface to the Motherboard

The connection to the motherboard is established by a gold-colored EISA indirect connector. All the required bus signals (ISA and PCI) are present on this connector. The following table shows the pin assignments.

ISA Bus Signals								PCI Bus Signals							
A	Signal name	**B**	Signal name	**C**	Signal name	**D**	Signal name	**E**	Signal name	**F**	Signal name	**G**	Signal name	**H**	Signal name
1	iochk#	1	gnd	1	sbhe#	1	memcs 16#	1	gnd	1	clk (slot3)	1	sdone	1	serr#
2	sd7	2	rstdrv	2	la23	2	iocs16#	2	gnd	2	gnd	2	sbo#	2	ad15
3	sd6	3	+5V	3	la22	3	irq10	3	inta#	3	intc#	3	c/be1#	3	ad14
4	sd5	4	irq9	4	la21	4	irq11	4	intb#	4	intd#	4	par	4	ad12
5	sd4	5	-5V	5	la20	5	irq12	5	+5V	5	+5V	5	gnd	5	gnd
6	sd3	6	drq2	6	la19	6	irq15								
7	sd2	7	-12V	7	la18	7	irq14	7	+5V	7	+5V	7	gnd	7	gnd
8	sd1	8	0ws#	8	la17	8	dack0#	8	rst#	8	clk (slot 1)	8	ad13	8	ad10
9	sd0	9	+12V	9	memr#	9	drq0	9	gnt# (slot 1)	9	gnd	9	ad11	9	ad8
10	iochrdy	10	gnd	10	memw #	10	dack5#	10	req# (slot1)	10	gnt# (slot 2)	10	ad9	10	ad7
11	aen	11	smemw#	11	sd8	11	drq5	11	gnd	11	gnd	11	c/be0#	11	ad5
12	sa19	12	smemr#	12	sd9	12	dack6#	12	clk (slot 2)	12	req# (slot2)	12	ad6	12	ad3
13	sa18	13	iow#	13	sd10	13	drq6	13	gnd	13	ad31	13	ad4	13	ad1
14	sa17	14	ior#	14	sd11	14	dack7#	14	ad30	14	ad29	14	ad2	14	ad0
15	sa16	15	dack3#	15	sd12	15	drq7	15	Req_N3	15	GNT_N 3				
16	sa15	16	drq3	16	sd13	16	+5V					16	+5V	16	+5V
17	sa14	17	dack1#	17	sd14	17	ma-ster#	17	+3,3V	17	+3,3V	17	+5V	17	+5V
18	sa13	18	drq1	18	sd15	18	gnd	18	ad28	18	ad27	18	gnd	18	gnd
19	sa12	19	refresh#					19	ad26	19	ad25	19	gnd	19	gnd
20	sa11	20	sysclk					20	ad24	20	c/be3#				
21	sa10	21	irq7					21	ad22	21	ad23				
22	sa9	22	irq6					22	ad20	22	ad21				
23	sa8	23	irq5					23	ad18	23	ad19				
24	sa7	24	irq4					24	+3,3V	24	+3,3V				
25	sa6	25	irq3												
26	sa5	26	dack2#					26	+3,3V	26	+3,3V				
27	sa4	27	t/c					27	ad16	27	ad17				
28	sa3	28	bale					28	frame#	28	irdy#				
29	sa2	29	+5V					29	c/be2#	29	devsel#				
30	sa1	30	osc					30	trdy#	30	lock#				
31	sa0	31	gnd					31	stop#	31	perr#				

ISA Slot Pin Assignment

Pin	Signal Name	Type*	Pin	Signal Name	Type
A1	–IOCHCK	I	B1	0 V	GND
A2	SD 07	I/O	B2	RESET DRV	O
A3	SD 06	I/O	B3	+ 5V	V_{CC}
A4	SD 05	I/O	B4	IRQ 9	I
A5	SD 04	I/O	B5	– 5V	V_{CC}
A6	SD 03	I/O	B6	DRQ 2	I
A7	SD 02	I/O	B7	– 12V	V_{CC}
A8	SD 01	I/O	B8	–OWA	I
A9	SD 00	I/O	B9	+ 12V	V_{CC}
A10	–IOCHRDY	I	B10	0 V	GND
A11	AEN	O	B11	–SMEMW	O
A12	SA 19	I/O	B12	–SMEMR	O
A13	SA 18	I/O	B13	–IOW	I/O
A14	SA 17	I/O	B14	–IOR	I/O
A15	SA 16	I/O	B15	–DACK3	O
A16	SA 15	I/O	B16	DRQ 3	I
A17	SA 14	I/O	B17	–DACK1	O
A18	SA 13	I/O	B18	DRQ 1	I
A19	SA 12	I/O	B19	–REFRESH	I/O
A20	SA 11	I/O	B20	CLK	O
A21	SA 10	I/O	B21	IRQ 7	O
A22	SA 09	I/O	B22	IRQ 6	O
A23	SA 08	I/O	B23	IRQ 5	O
A24	SA 07	I/O	B24	IRQ 4	O
A25	SA 06	I/O	B25	IRQ 3	O
A26	SA 05	I/O	B26	–DACK2	O
A27	SA 04	I/O	B27	TC	O
A28	SA 03	I/O	B28	BALE	O
A29	SA 02	I/O	B29	+ 5V	V_{CC}
A30	SA 01	I/O	B30	OSC	O
A31	SA 00	I/O	B31	0 V	GND

*) I/O determines the direction of the signals for the CPU board.

Pin	Signal Name	Type *	Pin	Signal Name	Type
C1	–SBHE	O	D1	–MEMCS16	I
C2	LA 23	I/O	D2	–IOCS16	I
C3	LA 22	I/O	D3	IRQ 10	I
C4	LA 21	I/O	D4	IRQ 11	I
C5	LA 20	I/O	D5	IRQ 12	I
C6	LA 19	I/O	D6	IRQ 13	I
C7	LA 18	I/O	D7	IRQ 14	I
C8	LA 17	I/O	D8	–DACK0	O
C9	–MEMR	I/O	D9	DRQ 0	I
C10	–MEMW	I/O	D10	–DACK5	O
C11	SD 08	I/O	D11	DRQ 5	I
C12	SD 09	I/O	D12	–DACK6	O
C13	SD 10	I/O	D13	DRQ 6	I
C14	SD 11	I/O	D14	–DACK7	O
C15	SD 12	I/O	D15	DRQ 7	I
C16	SD 13	I/O	D16	+ 5V	V_{CC}
C17	SD 14	I/O	D17	–MASTER	I
C18	SD 15	I/O	D18	0 V	GND

Under normal conditions, the signals -SBHE, LA17 - LA23, -MEMR and MEMW are operated as outputs (sending from the CPU). Only CPU boards which are suitable for use as a master CPU for system bus access send and receive these signals. A minus sign “-” in front of the signal name shows that the signal is LOW active.

PCI Slot Pin Assignment

	5V System Environment	
	Side B	**Side A**
1	-12V	TRST#
2	TCK	+12V
3	Ground	TMS
4	TDO	TDI
5	+5V	+5V
6	+5V	INTA#
7	INTB#	INTC#
8	INTD#	+5V
9	PRSNT1#	Reserved
10	Reserved	+5V (I/O)
11	PRSNT2#	Reserved
12	Ground	Ground
13	Ground	Ground
14	Reserved	Reserved
15	Ground	RST#
16	CLK	+5V (I/O)
17	Ground	GNT#
18	REQ#	Ground
19	+5V (I/O)	Reserved
20	AD[31]	AD[30]
21	AD[29]	+3.3V
22	Ground	AD[28]
23	AD[27]	AD[26]
24	AD[25]	Ground
25	+3.3V	AD[24]
26	C/BE[3]#	IDSEL
27	AD[23]	+3.3V
28	Ground	AD[22]
29	AD[21]	AD[20]
30	AD[19]	Ground
31	+3.3V	AD[18]
32	AD[17]	AD[16]
33	C/BE[2]#	+3.3V
34	Ground	FRAME#
35	IRDY#	Ground
36	+3.3V	TRDY#
37	DEVSEL#	Ground
38	Ground	STOP#
39	LOCK#	+3.3V
40	PERR#	SDONE
41	+3.3V	SBO#
42	SERR#	Ground
43	+3.3V	PAR
44	C/BE[1]#	AD[15]
45	AD[14]	+3.3V
46	Ground	AD[13]
47	AD[12]	AD[11]
48	AD[10]	Ground

	5V System Environment	
	Side B	**Side A**
49	Ground	AD[09]
50	CONNECTOR KEY	
51	CONNECTOR KEY	
52	AD[08]	C/BE[0]#
53	AD[07]	+3.3V
54	+3.3V	AD[06]
55	AD[05]	AD[04]
56	AD[03]	Ground
57	Ground	AD[02]
58	AD[01]	AD[00]
59	+5V (I/O)	+5V (I/O)
60	ACK64#	REQ64#
61	+5V	+5V
62	+5V	+5V
	CONNECTOR KEY	
	CONNECTOR KEY	
63	Reserved	Ground
64	Ground	C/BE[7]#
65	C/BE[6]#	C/BE[5]#
66	C/BE[4]#	+5V (I/O)
67	Ground	PAR64
68	AD[63]	AD[62]
69	AD[61]	Ground
70	+5V (I/O)	AD[60]
71	AD[59]	AD[58]
72	AD[57]	Ground
73	Ground	AD[56]
74	AD[55]	AD[54]
75	AD[53]	+5V (I/O)
76	Ground	AD[52]
77	AD[51]	AD[50]
78	AD[49]	Ground
79	+5V (I/O)	AD[48]
80	AD[47]	AD[46]
81	AD[45]	Ground
82	Ground	AD[44]
83	AD[43]	AD[42]
84	AD[41]	+5V (I/O)
85	Ground	AD[40]
86	AD[39]	AD[38]
87	AD[37]	Ground
88	+5V (I/O)	AD[36]
89	AD[35]	AD[34]
90	AD[33]	Ground
91	Ground	AD[32]
92	Reserved	Reserved
93	Reserved	Ground
94	Ground	Reserved

Assignment of the Slot Specific PCI Bus Signals

PCI Socket Pin No.	PCI Slot 1	shared ISA PCI Slot
B16	clk (slot 1)	clk (slot2)
A6	inta#	intb#
A7	intc#	intd#
B7	intb#	intc#
B8	intd#	inta#
B18	req# (slot 1)	req# (slot 2)
A17	gnt# (slot 1)	gnt# (slot 2)
A26	ad29	ad30

8.9 CD-ROM Drive

Depending on the device equipment, a CD-ROM drive is installed in the SIMATIC Box PC 620. The fitting depth of the PC is increased by 20 mm as a result. The CD-ROM drive allows you to read CDs.

Opening the Drawer

By briefly pressing the eject button, the drawer springs out slightly. Now pull the drawer out until it clicks into position.

Inserting / Removing CDs

Now insert the CD in the drawer with the labeling face up, and press it firmly down into the center of the turntable. To remove the CD, hold it by the edges and pull upwards.

Caution

To avoid too much pressure on the open drawer, **always** hold the drawer at the front with one hand when inserting or removing a CD.

Closing the Drawer

Push in the drawer until it closes completely. Do **not** press the eject button.

Note

The EJECT function offered by various applications for opening the CD-ROM drawer does not work with this drive.

After the drawer has been closed, the CD is tested and the access display light on the drive starts to flash:

- If the display flashes continually, the CD is faulty but can still be read,
- If the display flashes several times and then remains lit, the CD you have inserted is defective and cannot be read.
- The access indicator light is normally lit when the CD is being read.

CD-ROM Front

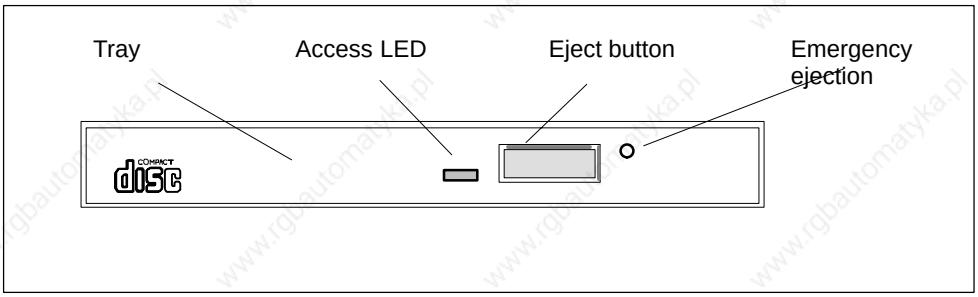

Figure 8-9 CD-ROM Front

Caution

Risk of data loss and damage to the drive!

CD-ROM drives are sensitive to vibrations and shock. Any vibrations occuring during operation can lead to damage to the drive or CD.

Emergency Eject

The procedure described below can used to remove a disc from the CD-ROM drive if the Open/Close button is disabled by software or a power failure occurs. In this case the CD tray cannot be opened automatically.

1. Turn off the power to the drive (switch off your device if necessary).
2. Insert a steel rod or an opened-up paper clip (with a maximum diameter of 1.3 mm and a mimimum of 55mm) into the emergency eject hole at the front of the drive and push lightly. The CD tray is ejected by about 10 mm. Pull it all the way open by hand and carefully lift the CD out.

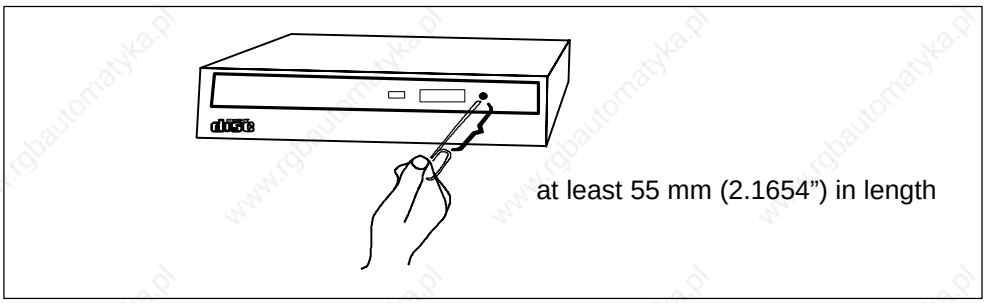

Figure 8-10 Emergency Ejection

8.10 Power Supply (AC)

Technical Specifications

Voltage	Max. Current	Voltage Stability
+ 12 V	1.7 A	± 4 %
– 12 V	0.2 A	± 6 %
+ 5 V	10 A	± 3 %
– 5 V	0.1 A	± 5 %
+ 3.3 V	4.2 A	± 5 %
+ 18 V (potential-free)	0.08 A	± 5 %

Voltage

Input voltage	115/230 V AC, ± 10 %
Line voltage frequency	47 - 63 Hz
Power consumption	≤ 120 Watt
Jumpering on power failure	20 ms
Maximum continual output power	84 W
Degree of protection	IP20 (when fitted)
Protection class	VDE 0106
Certification	EN 60950/IEC 950, UL/cUL1950, UL/cUL508

Power-Good-Signal

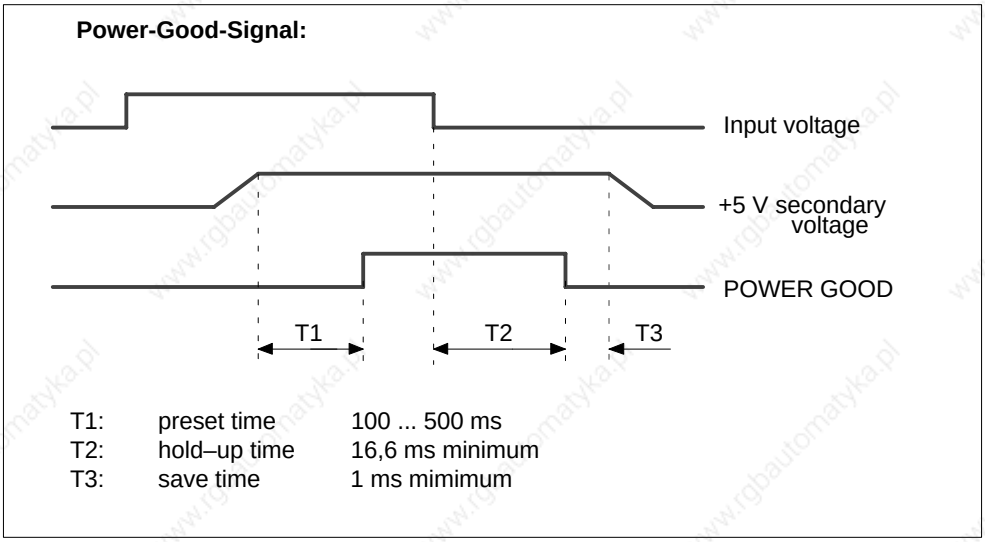

Figure 8-11 Time Characteristics of the Power Good Signal

8.11 Power Supply (DC)

Technical Specifications

Voltage	Max. Current	Voltage Stability
+ 12 V	1.7 A	± 4 %
– 12 V	0.2 A	± 6 %
+ 5 V	10 A	± 3 %
– 5 V	0.1 A	± 5 %
+ 3.3 V	4.2 A	± 5 %
+ 18 V (potential-free)	0.08 A	± 5 %

Voltage

Input voltage	24 V DC
Power consumption	≤ 120 Watt
Jumpering on power failure	20 ms at nominal voltage
Maximum continual power output	84 W
Degree of protection	IP20 (when fitted)
Protection class	VDE 0106
Certification	EN 60950/IEC 950, UL/cUL1950, UL/cUL508

Power-Good-Signal

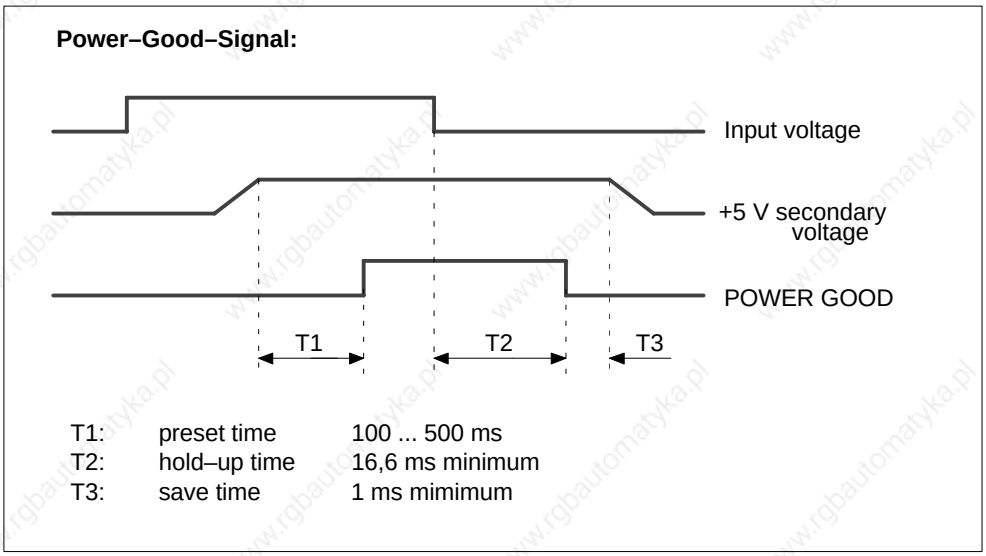

Figure 8-12 Time Characteristics of the Power Good Signal

8.12 Connecting Cables

Overview

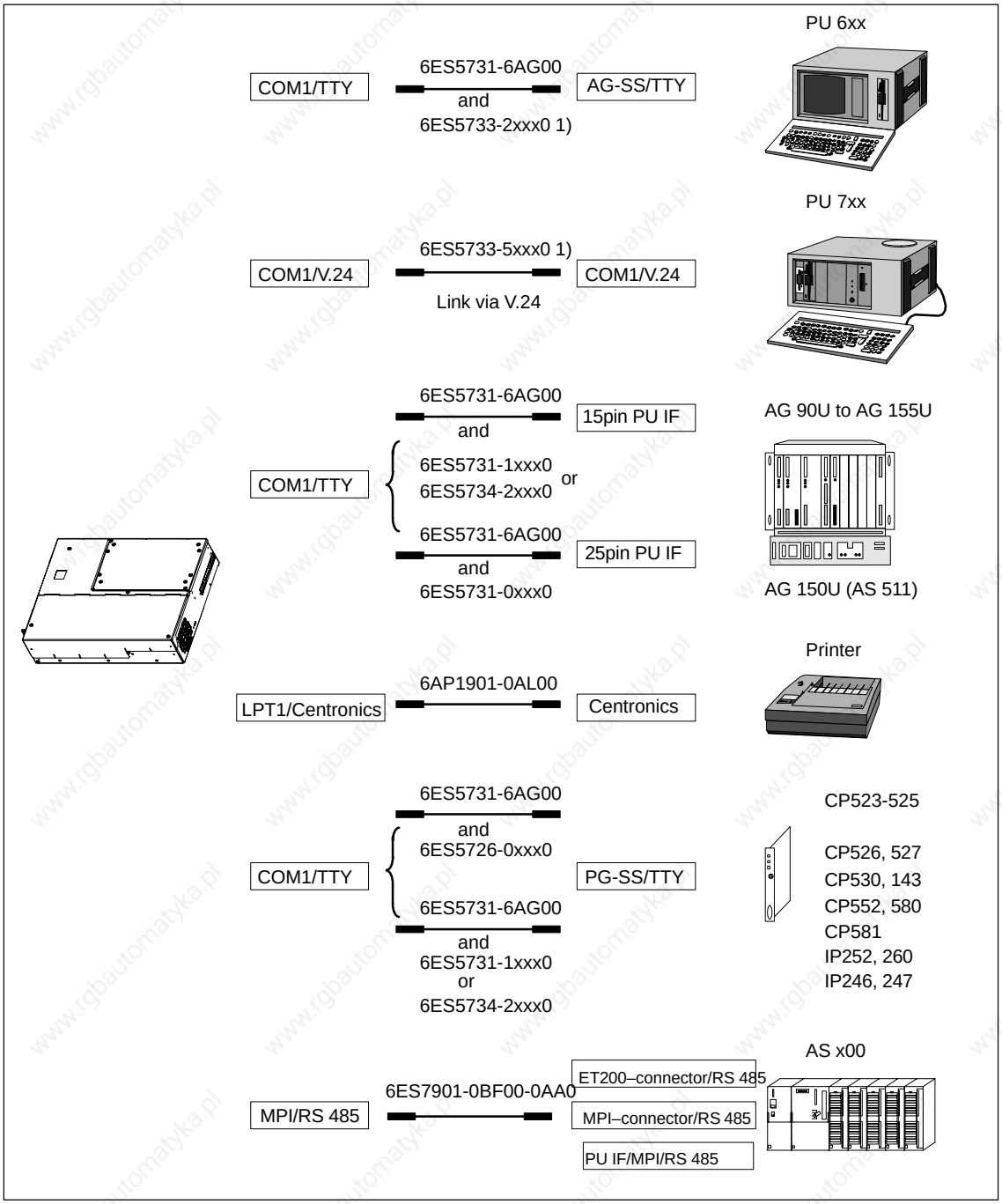

Figure 8-13 Connecting Cables

1) Connecting cables replacement part only

Standard Connecting Cable

You can use the standard connecting cable (supplied along with your SIMATIC Box PC 620) to connect your PC a Siemens programmable controller. Please read the notes in Chapter 3.

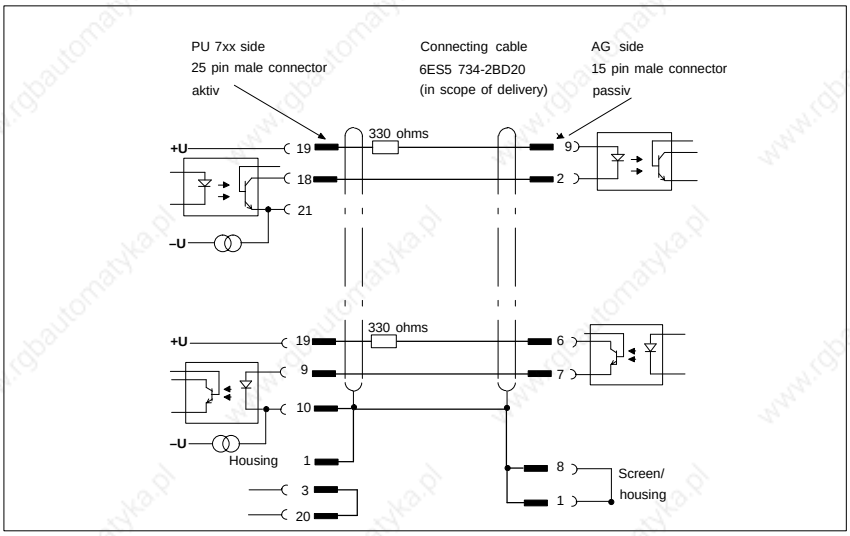

Figure 8-14 Standard Connecting Cable

Adapter for PU 6xx Cable

If you want to connect your PC to a programmable controller with the standard connecting cable, you will need an adapter.

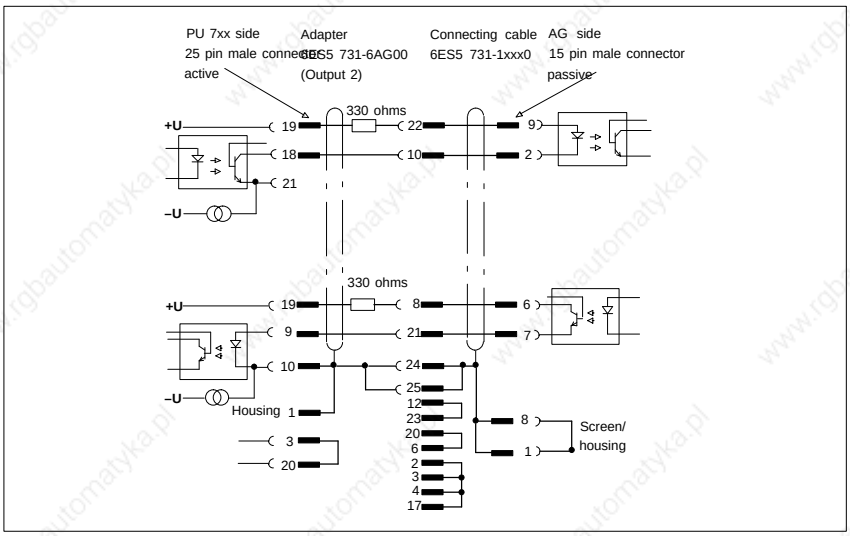

Figure 8-15 Adapter for a PU 6xx Cable

Connecting Cable with 25 Pin Socket Connector

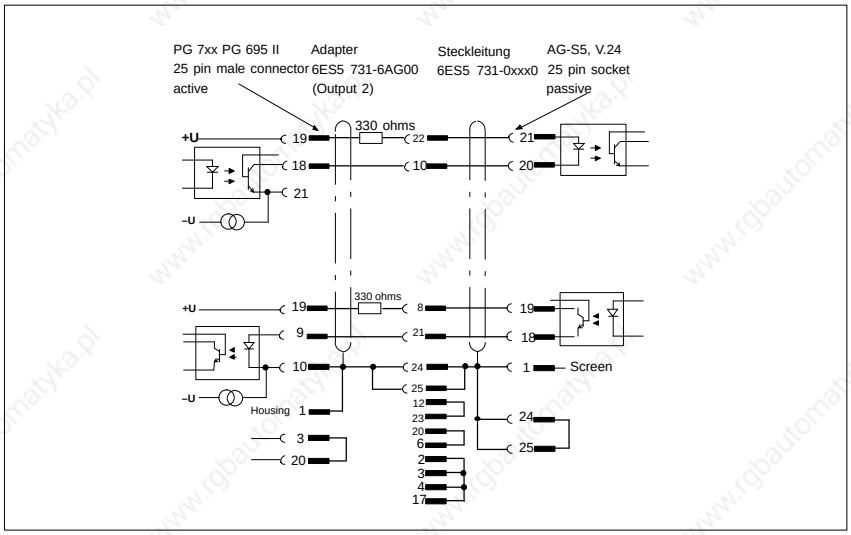

Figure 8-16 Connecting Cable with 25 Pin Socket Connector

Connecting Cables for the Connection of a PC/PU Link-Up

You can connect your PC to other programming devices via the TTY/COM 1 interface with this cable. This cable does not have an order number. Please read the notes in Chapter 4.

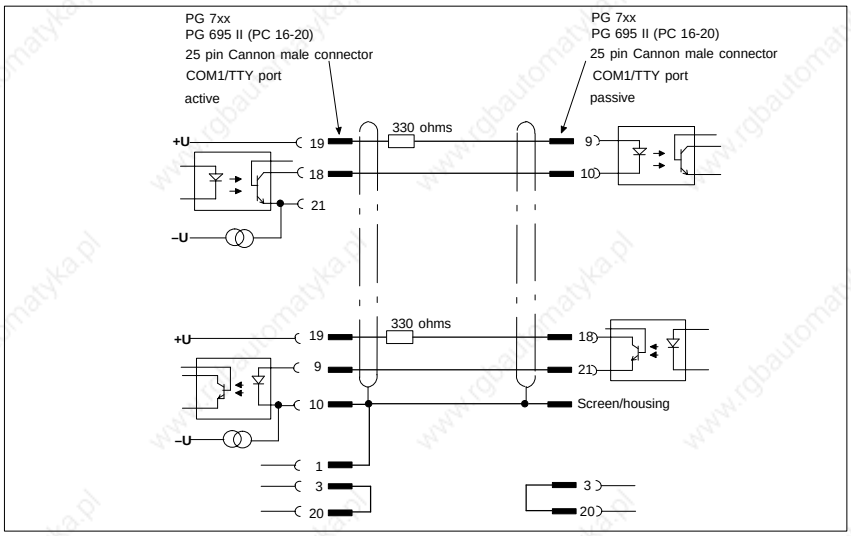

Figure 8-17 Connecting Cables for the Connection of a PC/PU Link-Up

Link-Up to an AG-S5 / V.24 and COM 1 / TTY of a PU 6xx

If you want to connect your PC to the AG-S5 / V.24 of a PG 6xx programming device, you will need an adapter. In this case, the PC must be switched to active. Please read the notes on changing over the TTY/COM 1 port to active in Chapter 5.

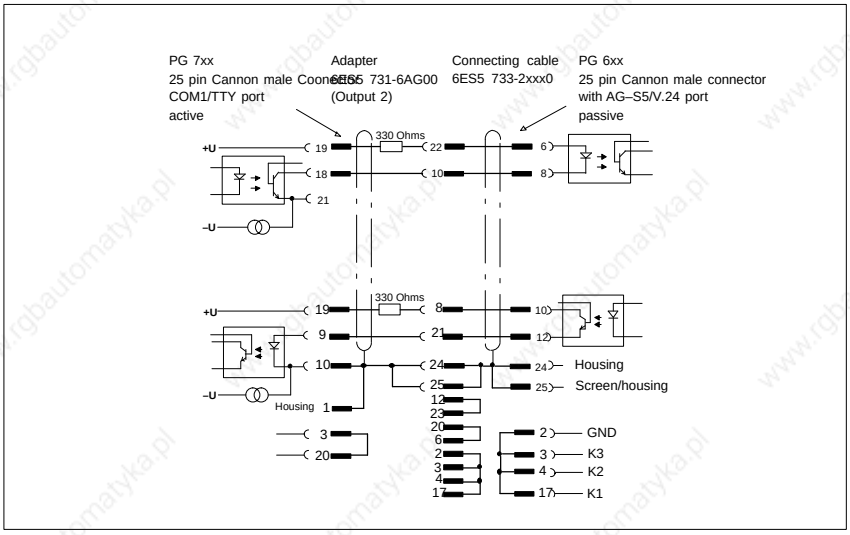

Figure 8-18 Link-Up to an AG-S5 / V.24 and COM 1 / TTY of a PU 6xx

PC- PU 7xx Connection in V.24 Operation

With this connecting cable you can connect to any PG 7XX.

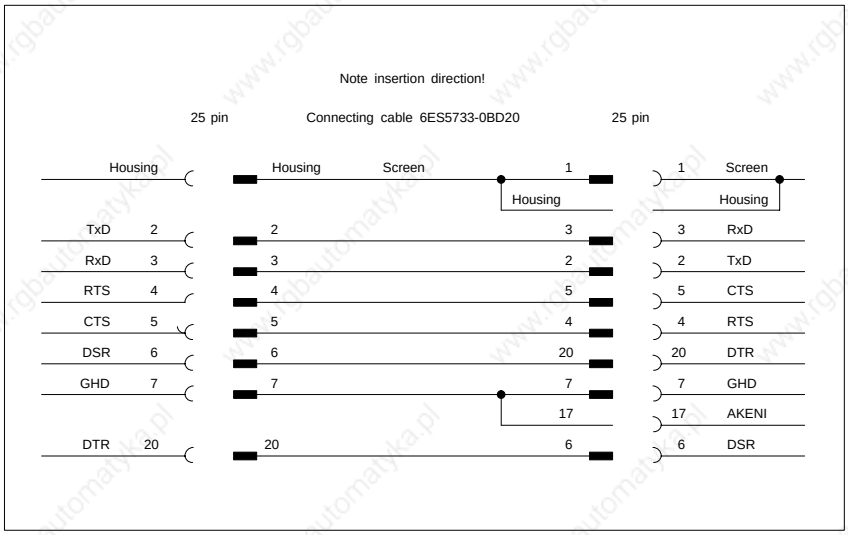

Figure 8-19 PC- PU 7xx Connection in V.24 Operation

Guidelines for handling electrostatic sensitive devices (ESD)

A

Overview of chapter

In chapter	you will find	on page
A.1	What does ESD mean?	A-2
A.2	Electrostatic charging	A-3
A.3	Basic protective measures against discharge of static electricity	A-4

A.1 What does ESD mean?

Definition

All electronic components are equipped with high–integrated modules or components. Conditioned by their technology, these electronic components are extremely sensitive to overvoltages and therefore to discharges of static electricity.

The short term **ESD** has been adopted for these **E**lectrostatic **S**ensitive **D**evices/ assemblies.

Electrostatic sensitive assemblies are identified by the following symbol:

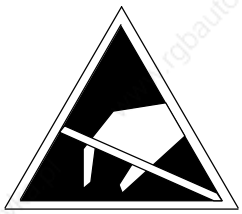

Caution

Electrostatic sensitive devices can be destroyed by voltages which are far below the limit of perception of human beings. These voltages occur when you touch a component or the electrical connections of a assembly without being electrostatically discharged. The damage which arises in a assembly as a result of overvoltage cannot usually be detected immediately, but only becomes apparent after a lengthy operating period.

A.2 Electrostatic charging

Charging

Anyone who is not conductively connected to the electrical potential of their surroundings can be electrostatically charged.

The maximum electrostatic voltage values which an operator can be charged with when contacting the materials stated in the illustration are shown in Fig. A–1. These values correspond to the specifications of IEC 801–2.

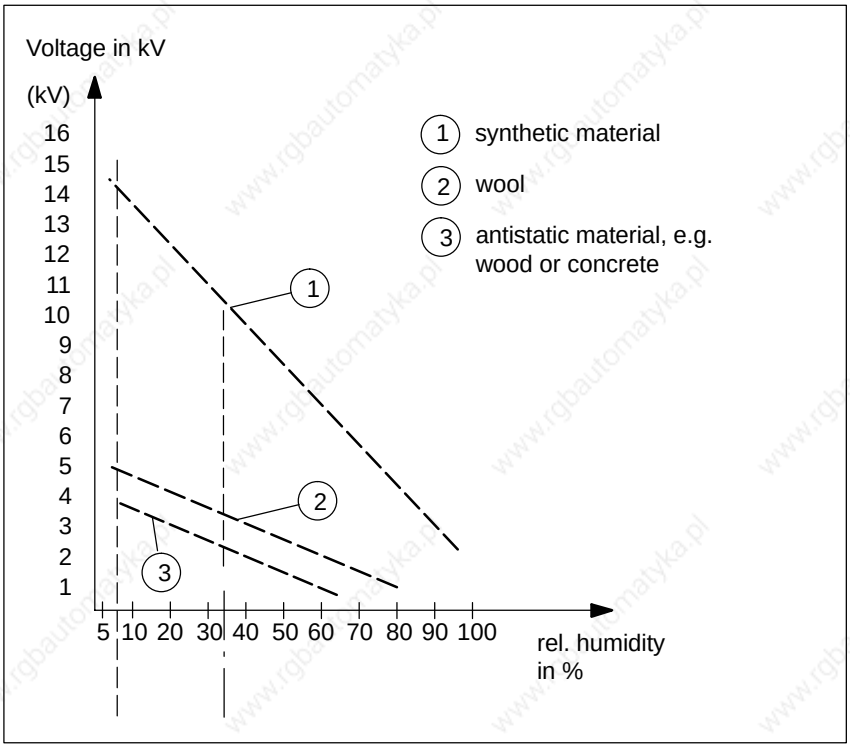

Figure A-1 Electrostatic voltages which an operator can be charged with

A.3 Basic protective measures against discharge of static electricity

Ensuring a good ground connection

When handling electrostatic sensitive devices, ensure that your person, the workplace and packaging are grounded. In this manner you avoid static charge.

Avoid direct contact

As a general principle, only touch electrostatic sensitive devices when this is unavoidable (e.g. during maintenance work). To prevent discharge energy from reaching and damaging sensitive components, hold the components in such a way that you do not touch the pins or the printed conductors.

If you have to perform measurements on an assembly, discharge your body by touching a grounded metallic object before carrying out the work. Use only grounded measuring instruments.

Glossary

What does this Chapter Contain?

This chapter contains a glossary in which you will find a list of the terminology used in conjunction with the Siemens range of PCs and programming devices and a brief explanation of each of the terms.

A

Access Protection

Access to the programs and data of a programming device can be protected by passwords.

Application

An application is a program which builds directly on, for example, the operating system. Applications on your programming device are MS-DOS/Windows, the STEP 5 Standard package, GRAPH 5 etc.

ASCII Editor

With an ASCII editor you can edit text files that are stored in ASCII code (American Standard Code of Information Interchange).

B

Base Memory

The base memory is a part of the main memory. It is 640 Kbytes for all programming devices. The size is entered in the SETUP menu under the entry “Base Memory” and is not changed even if the memory is extended.

Bps

The speed (in bits per second) with which information is transmitted over a data link.

BIOS

BASIC Input Output System

Boot Diskette

A diskette which includes a boot sector, enabling it to load the operating system from the diskette.

Booting

A loading operation which transfers the operating system to the main memory.

C

Cache

Fast intermediate memory between the work memory and the CPU.

CD ROM

(Compact Disc – Read Only Memory) Removable memory for large amounts of data.

Click

Pressing and immediately releasing the left mouse button; this selects objects or trigger commands.

COM1 Port

The COM1 port is a serial V.24/modem interface. This interface is suitable for asynchronous data transmission. It can also be used to connect printers with a serial interface.

COM2 Port

The COM2 port is a serial V.24 interface which can be used to connect a mouse or other external devices (for example, printers).

Configuration Files

These are files which define the configuration after booting. Examples of such files are CONFIG.SYS and AUTOEXEC.BAT and registry files.

Configuration Software

The configuration software brings the device configuration up to date when modules are installed. This is done either by copying the configuration files supplied with the module or by manual configuration.

Cursor

Pointer that shows the position on the screen at which the next entry will appear.

Cursor Control

Keypad on the keyboard for controlling the cursor.

D

Device Configuration

The configuration of a programming device contains information on the hardware and options of the device, such as memory configuration, drive types, monitor, network address etc. The data are stored in a configuration file and enable the operating system to load the correct device drivers and assign the correct device parameters.

If changes are made to the hardware configuration, the user can change entries in the configuration file using the SETUP program.

DIMM

dual **i**nline **m**emory **m**odule. A type of memory board composed of RAM chips mounted on a circuit board, similar to the more commonly used SIMM (Single Inline Memory Module). DIMMs are characterized by a 64–bit data path and pins (connectors) on each side that are on different circuits and that respond to different signals. SIMMs, in contrast, have a 32-bit data path, and their connectors are on the same circuit and respond to the same signal. While SIMMs must be added in pairs, DIMMs can be added to a computer one at a time.

Diskette

The diskette (floppy disk) is an external direct access memory on which all types of files and programs can be stored. The storage medium is a round magnetic disk in a plastic cover to protect it from getting scratched.

Disk Drive

The disk drive (floppy disk drive) is used to store programs and data on diskette (write access) or to load from diskette to the computer (read access).

Display

The monitor of the PG 740 PII.

Double-Click

Pressing and releasing the left mouse button very quickly twice in succession without moving the mouse. This action is normally to open an object or program.

Drives

Drives are used to hold rotating storage media (diskettes, hard disk, CDs).

Drivers

These are programs which are part of the operating system. They adapt the data from user programs to the specific formats required by the I/O devices such as hard disk, printers and monitors.

Drop-Down Menu

In graphics-supported programs, a menu line is positioned on the top edge of the screen. The menu titles contained in this line can be set either as drop-down or pull-down menus. Drop-down menus “roll” down as soon as the mouse pointer passes over a menu title. Pull-down menus only “roll” down when the menu title is clicked on. Different functions can then be called from these menus by moving the mouse and clicking on an item in a menu.

E

EPROM/EEPROM Submodules

These are plug-in submodules with EPROM/EEPROM chips. S5 user programs can be stored on them. These programmed submodules are then plugged in specially designed receptacles in the programmable controller.

Extended Memory

A memory extension can be installed in a programming device to increase the size of the memory.

Ethernet

Local network (bus structure) for text and data communication with a data transmission rate of 10 Mbps.

F

File

A file is a collection of data under one name.

Formatting

Formatting divides the memory area on a magnetic data medium into tracks and sectors. Formatting deletes all the data on a data medium. Every data medium must be formatted before it is used for the first time.

Function Keys

Function keys can be divided into two different types; the normal function keys which are assigned a particular function of the computer (for example, delete key), and programmable function keys (softkeys).

G

Gender Changer

Using the gender changer (25 pin / 25 pin), the COM1/V24/AG SIMATIC PC family port can be converted to the usual 25-pin male connector.

H

Hard Copy

The output of the complete contents of the screen on a printer is called a hard copy.

Hard Disk Drive

Hard disk drives (Winchester drives) are a form of magnetic disk memory where the magnetic disks are permanently built into the drive.

HMI

Human **M**achine **I**nterface

I

Interface

- An interface is the connection between individual hardware elements such as PLCs, programming devices, printers or monitors via physical connections (cables).
- An interface is also the connection between different programs, to enable them to work together.

Interface Module

Module used to connect the hardware I/O.

Interrupt

The interruption of program processing in the processor of a programmable controller by an interrupt event.

IRQ

Interrupt Request

ISA

Industrial Standard Architecture (bus for expansion module)

J

JEIDA

(Japanese Electronics Industry Development Association) Association of Japanese electronics manufacturers whose aim is to set up standards worldwide for the miniaturization and flexible application of PC expansion cards. Cooperates with PCMCIA.

K

Keyboard

The keyboard is the collection of keys which are used to input data, text, characters, letters, numbers, special characters and control commands in a computer. The keyboard forms the input interface between the user and the computer.

L

LCD

Liquid **C**rystal **D**isplay

LED

Light-emitting diode (for display and indicating purposes).

LPT1 Port

The LPT1 port (Centronics port) is a parallel interface that can be used to connect a printer.

LS 120 drive

The LS 120 drive is compatible with previous 3.5”-disk drives. With the LS 120 drive, normal floppy disks (1.44Mbyte) as well as Superdisks with up to 120 Mbyte capacity can be used.

M

Main Memory

The main memory is the complete RAM memory of a programming device.

Memory Card

Memory cards are memory for user programs and parameters in credit-card format, for example, for programmable modules and CPs.

Modem

Communications device that enables a computer to send and receive data over a telephone line. **Mo**dulator and **dem**odulator of a signal transmission facility. It converts the digital pulses from a computer into analog signals (and vice versa).

Module

Modules are boards (printed-circuit boards) which can be plugged into a programmable controller or programming device. They are available, for instance, as central controller modules, interface modules, or as mass memory modules.

Monitor

The monitor or screen is a visual display unit via which the programming device communicates with the user.

Motherboard

The motherboard is the core of the programming device. From here data are processed and stored, interfaces and device I/Os are controlled and managed.

Mouse

The mouse is an input device, with which the user inputs coordinates (x,y). By moving the mouse, the mouse pointer can be moved at will around the screen. By pressing the left mouse button, the position is marked. The other mouse keys may have different assignments according to the application. With the mouse, objects can be selected, menus processed and functions started.

Mouse Pointer

The mouse pointer is moved across the worktop (screen) by means of the mouse. The mouse pointer selects, for example, objects which are to be processed.

MPI/DP

The multipoint interface (MPI) is the programming device interface of SIMATIC S7. It enables access to programmable modules, text displays, and operator panels from a central point. The stations on the MPI can communicate with each other.

MS-DOS

(Microsoft Disk Operating System) is one of the standard operating systems for personal computers. It is a single-user system.

Multipoint Interface

The multipoint interface (MPI) is the programming device interface of SIMATIC S7/M7. It enables access to programmable modules, text displays, and operator panels from a central point. The stations on the MPI can communicate with each other.

N

Network

Link between programming devices and programmable controllers by means of interface modules, physical cables, and the corresponding software to allow data exchange between the devices.

O

OP

Operator **P**anels serve as a quick way to control machines. Expected values can be set, machine data called up, or plants created.

Operating System

Collective term for all programs which, in conjunction with the hardware, control and monitor execution of the user programs, the distribution of resources among the individual user programs, and the maintenance of the operating mode (for example, Windows 98).

P

Parallel Interface

Information is transmitted a byte at a time via a parallel interface (port). This means that the transmission rate is very fast. The programming devices have a parallel interface (LPT) to connect a printer.

Password

See Access Protection

PC

Personal computer

PC Card

A PC Card is a removable device, approximately the same size as a credit card, that is designed to plug into a PCMCIA slot. Release 1 of the PCMCIA specification specified a Type I card that is 3.3 millimeters thick and is intended to be used primarily as a memory-related peripheral. Release 2 of the PCMCIA specification specifies both a 5-millimeter-thick Type II card and a 10.5-millimeter-thick Type III card. Type II cards accommodate devices such as modem, fax, and network cards. Type III cards accommodate devices that require more space, such as wireless communications devices and rotating storage media (such as hard disks).

PCI

Peripheral Component Interconnect (fast expansion bus).

PCMCIA

(Personal Computer Memory Card International Association). Association of about 450 computer companies with the aim of setting worldwide standards for miniaturizing PC expansion cards and making their use more flexible, offering the market a basis for development. Cooperates with JEIDA.

PG

Programming device

PG Interface

The PG (programming device) interface is a serial port; it is located on a CPU, a CP/IP, or a coordinator module (PG-MUX) and is used to connect a programming device. Some CPUs may have two PG interfaces as an option.

PIC

SIMATIC programmable controller

Plug and play

Generally, a reference to the ability of a computer system to automatically configure a device added to it. When capitalized and, especially, when abbreviated PnP, a set of specifications developed by Intel and Microsoft that allows a PC to configure itself automatically to work with peripherals such as monitors, modems, and printers. A user can plug in a peripheral and ”play” it without manually configuring the system. A Plug and Play PC requires both a BIOS that supports Plug and Play and a Plug and Play expansion card.

Programmable Controller

The programmable logical controllers (PLC) of the SIMATIC systems (S5 or S7) consist of a central controller, one or more CPUs, and various I/O modules.

Pull-Down Menu

See Drop-Down Menu

R

RAM

RAM (**R**andom **A**ccess **M**emory) is a read/write memory in which every memory location can be addressed individually and its contents changed. RAM is used to store data and programs.

ROM

ROM (**R**ead **O**nly **M**emory) is a memory in which every memory location can be addressed individually. The stored programs and data are permanently programmed at the factory before delivery and are not lost in the event of a power failure.

RTC

Real-time clock

S

SCSI Interface

Small Computer System Interface. Interface for connecting SCSI devices (hard disk drives, CD-ROM drives).

Serial Interface

Data are transmitted one bit at a time via a serial interface (port); they are used where large distances have to be covered using the minimum amount of cabling.

SETUP (BIOS Setup)

A program in which information about the device configuration (that is, the configuration of the programming device's hardware) is defined. The device configuration of the programming device is preset with defaults. Changes must therefore be entered in the SETUP if a memory extension, new modules, or a new drive are added to the hardware configuration.

SIMATIC S5 Memory Submodule

Memory submodules for SIMATIC S5 that can be written with the programmer and inserted in an S5 programmable controller.

SIMATIC Memory Cards

Memory submodules in credit-card format for SIMATIC S5 and SIMATIC S7 which are programmed with the PG 740 PII and can be plugged in an S5 or S7 programmable controller.

SINEC L2 (PROFIBUS)

Bus system on the basis of the PROFIBUS standard. Components of the SIMATIC S5 and S7 series (for example, programming device, programmable controller, remote I/O) can be networked directly using SINEC L2.

SINEC H1(ETHERNET)

Bus system on the basis of the ETHERNET standard. Components of the SIMATIC S5 and S7 series (for example, programming device, programmable controller, remote I/O) can be networked directly using SINEC H1 interface modules.

Software

The collective term for all programs which are used on a computer. The operating system and the user programs are part of the concept “software”.

SOM

Safecard **O**n **M**otherboard consists of monitoring blocks on the motherboard, a driver and the SOM program. This allows the monitoring functions of different temperatures and the way programs run (Watchdog).

STEP 5 Basic Package

This is a software package which represents the basis for all other STEP 5 software packages. With the programmer (PG), this package is used to program PLCs in the SIMATIC S5 family. The language used is known as STEP 5.

STEP 7

Programming software for the creation of user programs for SIMATIC S7 control.

T

Text Cursor

The cursor shows where text may be entered, for example, in text editors and in dialog windows. In many applications the position of the cursor can be changed by moving and clicking the mouse pointer.

TFT Display

Thin-film-transistor color display

Trackball

The trackball is used as an input device for programs serviced by a mouse. On the PG 740 PIII, the trackball is integrated in the keyboard.

U

USB

Universal **S**erial **B**us. A serial bus with a data transfer rate of 12 megabits per second (Mbps) for connecting peripherals to a microcomputer. USB can connect up to 127 peripherals, such as external CD-ROM drives, printers, modems, mice, and keyboards, to the system through a single, general-purpose port. This is accomplished by daisy chaining peripherals together. USB is designed to support the ability to automatically add and configure new devices and the ability to add such devices without having to shut down and restart the system (hot plugging).

User Interface

The software-controlled menus and screens on the monitor through which the user communicates with the program.

User Program

A collection of all the instructions, declarations, and data for signal processing, by which a system (or process) is controlled or influenced. It is linked to a programmable module (for example, CPU, FM) and can be structured in smaller units (blocks).

V

V.24 Interface

The V.24 interface is a standardized interface for data transmission. Printers, modems, and other hardware modules can be connected to a V.24 interface.

VGA

(Video Graphics Array)
Color graphics control mode

W

Warm Restart

A warm restart is a restart after a program has been aborted. The operating system is reloaded and restarted. A warm restart is performed with the key combination CTRL+ALT+DEL.

Work Memory

The work memory is a RAM memory in the CPU which the processor accesses during user program processing.

Write Protection

Write protection for files or diskettes

- Write protection for files; this type of write protection is stored in the computer and is allocated by the system manager.
- Diskette write protection; for 5 1/4 in. diskettes by blanking out the hole on the right-hand edge with an adhesive label, for 3 1/2 in. diskettes or EOD disks by opening the write protection hole.

Index

A

Address areas, 8-4
Assignment, Internal Ports, 8-30
AT Cards, 5-13

B

Backup Battery, 3-14, 5-11
Battery, Safety notes, 3-14
BIOS, 6-2
    date, 6-6
    time, 6-6
Bus board, 8-38
    removal and installation, 5-24

C

Card, note, 5-13
Cardbus, 4-10
CD ROM Drive, 3-11, 8-44
CD-ROM drive, removal and installation, 5-20
Clock, 3-14, 5-11
COM 1, 8-15
COM 2, 8-17
Components, Current Requirement, 8-2
Connecting, 4-13
    a Mouse, 4-7
    a PS/2 Keyboard, 4-8
    the Monitor, 4-6
    the PC, 2-10
    the Printer, 4-5, 4-6
    USB Periphery, 4-9
Connecting Cables, 8-48
Connection
    under Windows, 4-21
    via MPI/DP Interface, 4-18
    via PROFIBUS, 4-20
Current Requirement, components, 8-2

D

Default Setup Settings, 6-30
Device Configuration, 6-1, 6-2
Device for holding down the modules, removal and installation, 5-15
Diagnosing, Errors, 7-2
Diskettes, 3-9
Display Port, 8-27
Display Select Inputs, 8-28
DMA Assignments, 8-7
Drive LS 120, Glossary-8
Drives, 3-9

E

Error Diagnosis, 7-1
ESD guidelines, 5-2
Ethernet RJ45 Connection, 8-23
Expansion card, removal and installation, 5-17
Expansion Cards, maximum dimensions, 5-13
Expansions, 5-1
external keyboard, 8-20

F

Fan, removal and installation, 5-26
Floppy disk drive, removal and installation, 5-21
Floppy Disk Drive Type, setting, 6-6
Front Ports, 3-5
Function, Safecard, 8-11
Functions, 1-2

G

Gender Changer, 8-16

H

Hard Disk Drive, 3-11
Hard disk drive, removal and installation, 5-18
Hard Disk Drive Type, setting, 6-6
Hardware Information, 8-1

I

I/O address area, 8-4
Inbetriebnehmen, Warnung, 2-3
Industrial Ethernet, 4-21
Installing, 2-3
Interface, USB, Glossary-13
Interrupt Assignments, 8-8
Interrupt Controller, 8-9

J

Jumper settings, 4-17

L

Lithium battery, 3-14, 5-11
LPT 1, 8-18
LS 120 Drive, 3-10, Glossary-8
LS 120 drive, removal and installation, 5-22

M

Memory address area, 8-4
Memory Addresses, 8-5
Memory submodules, 5-9
Monitoring functions, 8-11
Monitors, 4-6
Motherboard, 5-7
  removal and installation, 5-25
MPI/DP Socket Connector, 8-22
MPI/PROFIBUS Network, 4-19

N

Note
  card, 5-13
  PCI Cards, long, 5-14

O

Opening the PC, 5-4

P

Parallel Port, 8-18
PC Card, 6-33
PC Card Port, 3-7, 4-10
PCI Cards, long, 5-14
  note, 5-14
PCI cards, short , 5-14
Peripheral units, shielding, approval for operation, 3-2
Permissible fitting postions, 2-8
Point to point connection, 4-13
Ports, 1-3, 3-2, 3-3, 3-5, 8-14
POST Codes, 7-4
Power connection, Safety notes, 4-3
Power On Self Test, 7-3
Power supply, 4-2
Power Supply (AC), technical data, 8-46
Power Supply (DC), technical data, 8-47
Power supply unit, 2-9
  removal and installation, 5-23
Power systems, 4-2
Processor Upgrade, 5-27
Product overview, 1-1
PROFIBUS, 4-20
PS/2 Mouse Port, 8-19

R

Range of Application, 1-2
Removal and installation
  bus board, 5-24
  CD-ROM drive, 5-20
  Device for holding down the modules, 5-15
  Expansion card, 5-17
  fan, 5-26
  floppy disk drive, 5-21
  LS 120 drive, 5-22
  motherboard, 5-25
  power supply unit, 5-23
Reset Button, 5-29

S

Safety notes
  Battery, 3-14
  Power connection, 4-3
Serial Port, 8-15, 8-17
Setting, Hard Disk Drive Type, 6-6
Setting up, 4-1
Setup, 6-2
  Floppy Disk Drive Type, 6-6
  Memory Cache, 6-9
SETUP Menus, 6-2
Standard Connecting Cable, 8-49
Starting SETUP, 6-2
Switching off the PC, 2-10

Switching on the PC, 2-10
Switching to Active/Passive, 4-17

T

Transport, 2-11
TTY Port, 4-14
TTY Jumper, 5-28

U

Unpacking, 2-2
USB interface, Glossary-13
USB port, 3-6

V

VGA Port, 3-5
VGA Socket Connector, 8-24
Video Modes, 8-10

W

Warnung, Inbetriebnehmen, 2-3
Watchdog
    Function, 8-13
    monitoring times, 8-13
    reactions, 8-13

X

XT Cards, 5-13