SIEMENS

SINAMICS

SINAMICS S120

AC Drive

Manual

Edition 04/2014

Answers for industry.

SIEMENS

SINAMICS

S120
AC Drive

Manual

Foreword

Fundamental safety instructions 1

System overview 2

Mains connection and line-side power components 3

Power Modules 4

DC link components 5

Motor-side power components 6

Control Units, Control Unit Adapters and operating components 7

Supplementary system components and encoder system integration 8

Accessories 9

Cabinet design and EMC for components, Blocksize format 10

Service and maintenance 11

Appendix A

(GH6), 04/2014

6SL3097-4AL00-0BP4

Legal information

Warning notice system

This manual contains notices you have to observe in order to ensure your personal safety, as well as to prevent damage to property. The notices referring to your personal safety are highlighted in the manual by a safety alert symbol, notices referring only to property damage have no safety alert symbol. These notices shown below are graded according to the degree of danger.

⚠DANGER
indicates that death or severe personal injury **will** result if proper precautions are not taken.

⚠WARNING
indicates that death or severe personal injury **may** result if proper precautions are not taken.

⚠CAUTION
indicates that minor personal injury can result if proper precautions are not taken.

NOTICE
indicates that property damage can result if proper precautions are not taken.

If more than one degree of danger is present, the warning notice representing the highest degree of danger will be used. A notice warning of injury to persons with a safety alert symbol may also include a warning relating to property damage.

Qualified Personnel

The product/system described in this documentation may be operated only by **personnel qualified** for the specific task in accordance with the relevant documentation, in particular its warning notices and safety instructions. Qualified personnel are those who, based on their training and experience, are capable of identifying risks and avoiding potential hazards when working with these products/systems.

Proper use of Siemens products

Note the following:

⚠WARNING
Siemens products may only be used for the applications described in the catalog and in the relevant technical documentation. If products and components from other manufacturers are used, these must be recommended or approved by Siemens. Proper transport, storage, installation, assembly, commissioning, operation and maintenance are required to ensure that the products operate safely and without any problems. The permissible ambient conditions must be complied with. The information in the relevant documentation must be observed.

Trademarks

All names identified by ® are registered trademarks of Siemens AG. The remaining trademarks in this publication may be trademarks whose use by third parties for their own purposes could violate the rights of the owner.

Disclaimer of Liability

We have reviewed the contents of this publication to ensure consistency with the hardware and software described. Since variance cannot be precluded entirely, we cannot guarantee full consistency. However, the information in this publication is reviewed regularly and any necessary corrections are included in subsequent editions.

Siemens AG
Industry Sector
Postfach 48 48
90026 NÜRNBERG
GERMANY

Order number: 6SL3097-4AL00-0BP4
Ⓟ 04/2014 Subject to change

Copyright © Siemens AG 2006 - 2014.
All rights reserved

Foreword

SINAMICS documentation

The SINAMICS documentation is organized in the following categories:

- General documentation/catalogs
- User documentation
- Manufacturer/service documentation

More information

Using the following link, you can find information on the topics:

- Ordering documentation/overview of documentation
- Additional links to download documents
- Using documentation online (find and search in manuals/information)

http://www.siemens.com/motioncontrol/docu

Please send any questions about the technical documentation (e.g. suggestions for improvement, corrections) to the following e-mail address:
docu.motioncontrol@siemens.com

My Documentation Manager

Using the following link, you can find information on how to create your own individual documentation based on Siemens content, and adapt it for your own machine documentation:
http://www.siemens.com/mdm

Training

At the following link, you will find information on SITRAIN - training from Siemens for products, systems, and drive and automation engineering solutions:
http://www.siemens.com/sitrain

FAQs

You can find Frequently Asked Questions in the Service&Support pages under **Product Support**:
http://support.automation.siemens.com

SINAMICS

You can find information on SINAMICS under:
http://www.siemens.com/sinamics

Usage phases and the available tools/documents

Table 1 Usage phases and the available documents/tools

Usage phase	Document/tool
Orientation	SINAMICS S sales documentation
Planning/engineering	• SIZER configuration tool • Configuration manuals, motors
Decision making/ordering	SINAMICS S120 catalogs • SIMOTION, SINAMICS S120 and Motors for Production Machines (Catalog PM 21) • SINAMICS and motors for single-axis drives (catalog D 31) • SINUMERIK & SINAMICS Equipment for Machine Tools (Catalog NC 61) • SINUMERIK 840D sl Type 1B Equipment for Machine Tools (Catalog NC 62)
Configuring/installation	• SINAMICS S120 Equipment Manual for Control Units and Additional System Components • SINAMICS S120 Equipment Manual for Booksize Power Units • SINAMICS S120 Equipment Manual for Chassis Power Units • SINAMICS S120 Equipment Manual for AC Drives • SINAMICS S120M Equipment Manual Distributed Drive Technology • SINAMICS HLA System Manual Hydraulic Drive
Commissioning	• STARTER commissioning tool • SINAMICS S120 Getting Started • SINAMICS S120 Commissioning Manual • SINAMICS S120 CANopen Commissioning Manual • SINAMICS S120 Function Manual • SINAMICS S120 Safety Integrated Function Manual • SINAMICS S120/S150 List Manual • SINAMICS HLA System Manual Hydraulic Drive
Using/operating	• SINAMICS S120 Commissioning Manual • SINAMICS S120/S150 List Manual • SINAMICS HLA System Manual Hydraulic Drive

Usage phase	Document/tool
Maintenance/Service	• SINAMICS S120 Commissioning Manual • SINAMICS S120/S150 List Manual
List of references	• SINAMICS S120/S150 List Manual

Target group

This documentation is intended for machine manufacturers, commissioning engineers, and service personnel who use the SINAMICS drive system.

Benefits

This Manual provides all the information, procedures and operational instructions required for commissioning and servicing SINAMICS S120.

Standard scope

The scope of the functionality described in this document can differ from the scope of the functionality of the drive system that is actually supplied.

- Other functions that are not explained in this documentation may be able to be executed in the drive system. However, no claim can be made regarding the availability of these functions when the equipment is first supplied or in the event of servicing.
- The documentation can also contain descriptions of functions that are not available in a particular product version of the drive system. The functionalities of the supplied drive system should only be taken from the ordering documentation.
- Extensions or changes made by the machine manufacturer must be documented by the machine manufacturer.

For reasons of clarity, this documentation does not contain all of the detailed information on all of the product types. and cannot take into consideration every conceivable type of installation, operation and service/maintenance.

Technical Support

Country-specific telephone numbers for technical support are provided in the Internet under **Contact**:

http://www.siemens.com/automation/service&support

EC Declarations of Conformity

The EC Declaration of Conformity for the EMC Directive can be found on the Internet at:

http://support.automation.siemens.com/WW/view/de/21901735/134200

The EC Declaration of Conformity for the Low Voltage Directive can be found on the Internet at:

http://support.automation.siemens.com

There – as a search term – enter the number 22383669 .

Note

When operated in dry areas, SINAMICS S units conform to the Low-Voltage Directive 2006/95/EC.

Note

SINAMICS S units comply with the EMC Directive 2004/108/EC in the configuration specified in the associated EC Declaration of Conformity for EMC and when the EMC installation guideline provided in the Configuration Manual with Order No. 6FC5297-0AD30-0xPx is implemented.

Note

The Equipment Manual describes a desired state which, if maintained, ensures the required level of operational reliability and compliance with EMC limit values.

Should there be any deviation from the requirements in the manual, appropriate actions (e.g. measurements) must be taken to check/prove that the required level of operational reliability and compliance with EMC limit values are ensured.

EMC limit values in South Korea

이 기기는 업무용(A급) 전자파적합기기로서 판매자 또는 사용자는 이 점을 주의하시기 바라며, 가정외의 지역에서 사용하는 것을 목적으로 합니다.

For sellers or other users, please bear in mind that this device is an A-grade electromagnetic wave device. This device is intended to be used in areas other than at home.

The EMC limit values to be complied with for South Korea correspond to the limit values of the EMC product standard for variable-speed electric drives EN 61800-3, Category C2 or limit value class A, Group 1 according to EN55011. By applying suitable supplementary measures, the limit values according to Category C2 or according to limit value class A, Group 1 are maintained. Further, additional measures may be required, for instance, using an additional radio interference suppression filter (EMC filter). The measures for EMC-compliant design of the system are described in detail in this manual and in the Configuration Manual "EMC installation guideline."
The measures for EMC-compliant design of the system are described in detail in this manual respectively in the Installation Guideline EMC.
Please note that the final statement on compliance with the standard is always provided on the label attached to each unit.

Spare parts

Spare parts are available on the Internet at:
http://support.automation.siemens.com/WW/view/de/16612315

Explanation of symbols

Table 2 Symbols

Symbol	Meaning
	Protective earth (PE)
	Ground (e.g. M 24 V)
	Functional ground Equipotential bonding

Table of contents

Foreword 5

1 Fundamental safety instructions 21

1.1 General safety instructions 21

1.2 Safety instructions for electromagnetic fields (EMF) 24

1.3 Handling electrostatic sensitive devices (ESD) 25

1.4 Industrial security 25

1.5 Residual risks of power drive systems 26

2 System overview 29

2.1 Field of application 29

2.2 Platform Concept and Totally Integrated Automation 31

2.3 Overview, SINAMICS S120 AC Drive 32

2.4 SINAMICS S120 components 33

2.5 System data 35

2.6 Derating as a function of the ambient temperature, pulse frequency, and installation altitude 37

3 Mains connection and line-side power components 39

3.1 Introduction 39

3.2 Information on the disconnector unit 40

3.3 Overcurrent protection by means of line fuses and circuit breakers 41

3.4 Using residual-current devices 41

3.5 Overvoltage protection 42

3.6 Line contactors 43

3.7 Line filter 44
3.7.1 Description 44
3.7.2 Classification of EMC behavior 44
3.7.3 Electromagnetic compatibility (EMC) of the system 45
3.7.4 Safety instructions for line filters 47
3.7.5 Dimension drawings 48
3.7.6 Mounting 53
3.7.7 Technical data 54
3.7.7.1 Technical data, Blocksize line filter 54
3.7.7.2 Technical data, Chassis line filter 55

3.8 Line reactors 56
3.8.1 Description 56
3.8.2 Safety instructions for line reactors 56

3.8.3 Dimension drawings ... 58
3.8.4 Mounting ... 64
3.8.5 Electrical Connection ... 71
3.8.6 Technical data ... 72
3.8.6.1 Blocksize line reactors ... 72
3.8.6.2 Chassis line reactors ... 75

3.9 Line connection variants ... 76
3.9.1 Operation on different line system configurations ... 76
3.9.2 Methods of line connection ... 79
3.9.3 Operation of the line connection components on the supply line ... 81
3.9.4 Operation of the line connection components via an autotransformer ... 82
3.9.5 Operation of the line connection components via an isolating transformer ... 83

4 Power Modules ... 85

4.1 Safety instructions for Power Modules ... 85

4.2 Blocksize Power Modules (PM240-2) ... 88
4.2.1 Description ... 88
4.2.2 Safety information for 240-2 Power Modules ... 90
4.2.3 Interface description ... 91
4.2.3.1 Overview ... 91
4.2.3.2 Connection example ... 93
4.2.3.3 Line supply connection ... 94
4.2.3.4 Braking resistor and DC link connection ... 94
4.2.3.5 Motor connection ... 94
4.2.3.6 Safe brake relay connection ... 95
4.2.4 Dimension drawings ... 95
4.2.5 Mounting ... 103
4.2.5.1 Mounting dimensions and tightening torques ... 104
4.2.5.2 Mounting the shielding plate ... 105
4.2.6 Technical data ... 106
4.2.6.1 200 V Power Modules ... 106
4.2.6.2 400 V Power Modules ... 111
4.2.6.3 Characteristics ... 117

4.3 Power Modules Blocksize (PM340) ... 121
4.3.1 Description ... 121
4.3.2 Safety instructions for Power Modules blocksize format ... 123
4.3.3 Interface description ... 124
4.3.3.1 Overview ... 124
4.3.3.2 Connection example ... 130
4.3.3.3 Line supply connection ... 132
4.3.3.4 Braking resistor and DC link connection ... 132
4.3.3.5 Motor connection ... 133
4.3.3.6 Safe brake relay connection ... 133
4.3.4 Dimension drawings ... 134
4.3.5 Mounting ... 142
4.3.5.1 Mounting dimensions and tightening torques ... 142
4.3.5.2 Access to the power supply terminals and motor terminals ... 144
4.3.6 Technical data ... 145
4.3.6.1 Power Modules Blocksize, 1-ph. AC ... 145
4.3.6.2 Power Modules Blocksize, 3-ph. AC ... 147
4.3.6.3 Characteristics ... 154

4.4 Power Modules Chassis 159
4.4.1 Description 159
4.4.2 Safety instructions for Power Modules chassis format 159
4.4.3 Interface description 160
4.4.3.1 Overview 160
4.4.3.2 Connection example 162
4.4.3.3 Terminal Block X9 163
4.4.3.4 DCPS, DCNS connection for a dv/dt filter 163
4.4.3.5 X41 EP terminal / temperature sensor connection 164
4.4.3.6 X42 terminal strip 165
4.4.3.7 X46 Brake control and monitoring 166
4.4.3.8 DRIVE-CLiQ interface X400-X402 166
4.4.3.9 Meaning of the LEDs on the Power Module 167
4.4.4 Dimension drawings 168
4.4.5 Electrical connection 170
4.4.6 Technical data 172
4.4.6.1 Characteristics 174

5 DC link components 179

5.1 Blocksize 179
5.1.1 Braking resistors 179
5.1.1.1 Description 179
5.1.1.2 Safety instructions for blocksize braking resistors 179
5.1.1.3 Connection examples 181
5.1.1.4 Dimension drawings 182
5.1.1.5 Installation 186
5.1.1.6 Technical data 187

5.2 Chassis 192
5.2.1 Braking Modules 192
5.2.1.1 Description 192
5.2.1.2 Safety instructions for Braking Modules chassis format 193
5.2.1.3 Braking Module for frame size FX 194
5.2.1.4 Braking Module for frame size GX 195
5.2.1.5 Connection example 196
5.2.1.6 Braking resistor connection X1 197
5.2.1.7 X21 digital inputs/outputs 197
5.2.1.8 S1 Threshold switch 198
5.2.1.9 Installing a Braking Module in a Power Module, frame size FX 199
5.2.1.10 Installing a Braking Module in a Power Module, frame size GX 201
5.2.1.11 Technical data 203
5.2.2 Braking resistors 204
5.2.2.1 Description 204
5.2.2.2 Safety instructions for braking resistors chassis format 204
5.2.2.3 Dimension drawing 207
5.2.2.4 Electrical connection 208
5.2.2.5 Technical data 208

6 Motor-side power components 211

6.1 Blocksize 211
6.1.1 Motor reactors 211
6.1.1.1 Description 211
6.1.1.2 Safety instructions for motor reactors 211

6.1.1.3 Dimension drawings ... 213
6.1.1.4 Mounting ... 221
6.1.1.5 Electrical connection ... 227
6.1.1.6 Technical data ... 228

6.2 Chassis ... 231
6.2.1 Motor reactors ... 231
6.2.1.1 Description ... 231
6.2.1.2 Safety instructions for motor reactors ... 231
6.2.1.3 Dimension drawing ... 233
6.2.1.4 Technical data ... 234
6.2.2 Sinusoidal filter ... 235
6.2.2.1 Description ... 235
6.2.2.2 Safety instructions for sine-wave filter chassis format ... 235
6.2.2.3 Dimension drawing ... 237
6.2.2.4 Technical data ... 238
6.2.3 dv/dt filter plus Voltage Peak Limiter ... 239
6.2.3.1 Description ... 239
6.2.3.2 Safety instructions for du/dt filter plus Voltage Peak Limiter ... 239
6.2.3.3 Interface description ... 242
6.2.3.4 Connecting the dv/dt filter plus Voltage Peak Limiter ... 243
6.2.3.5 Dimension drawing, dv/dt reactor ... 244
6.2.3.6 Dimension drawing of the voltage peak limiter ... 245
6.2.3.7 Technical data ... 246
6.2.4 dv/dt filter compact plus Voltage Peak Limiter ... 247
6.2.4.1 Description ... 247
6.2.4.2 Safety instructions for du/dt filter compact plus Voltage Peak Limiter ... 247
6.2.4.3 Interface description ... 251
6.2.4.4 Connecting the dv/dt filter compact plus Voltage Peak Limiter ... 252
6.2.4.5 Dimension drawing of dv/dt filter compact plus Voltage Peak Limiter ... 253
6.2.4.6 Technical data ... 255

7 Control Units, Control Unit Adapters and operating components ... 257

7.1 Introduction ... 257
7.1.1 Control Units ... 257
7.1.2 Control Unit Adapter ... 259

7.2 Safety instructions for Control Units and Control Unit Adapters ... 260

7.3 Control Unit CU310-2 PN (PROFINET) ... 262
7.3.1 Description ... 262
7.3.2 Interface description ... 263
7.3.2.1 Overview ... 263
7.3.2.2 X22 serial interface (RS232) ... 264
7.3.2.3 X23 HTL/TTL/SSI encoder interface ... 265
7.3.2.4 X100 DRIVE-CLiQ interface ... 268
7.3.2.5 X120 digital inputs (fail-safe)/EP terminal/temperature sensor ... 269
7.3.2.6 X121 digital inputs/outputs ... 271
7.3.2.7 X124 Electronics power supply ... 273
7.3.2.8 X127 LAN (Ethernet) ... 274
7.3.2.9 X130 digital input (fail safe) digital output ... 275
7.3.2.10 X131 digital inputs/outputs and analog input ... 276
7.3.2.11 X150 P1/P2 PROFINET ... 278
7.3.2.12 Measuring sockets ... 279

7.3.2.13 S5 DIP switch 279
7.3.2.14 DIAG button 279
7.3.2.15 RESET button 279
7.3.2.16 Memory card 280
7.3.3 Connection examples 281
7.3.4 Meaning of the LEDs 283
7.3.4.1 Function of the LEDs 283
7.3.4.2 Behavior of the LEDs during booting 284
7.3.4.3 Behavior of the LEDs in the operating state 285
7.3.5 Dimension drawing 286
7.3.6 Technical data 287

7.4 Control Unit CU310-2 DP (PROFIBUS) 288
7.4.1 Description 288
7.4.2 Interface description 289
7.4.2.1 Overview 289
7.4.2.2 X21 PROFIBUS 290
7.4.2.3 PROFIBUS address switch 291
7.4.2.4 X22 serial interface (RS232) 292
7.4.2.5 X23 HTL/TTL/SSI encoder interface 293
7.4.2.6 X100 DRIVE-CLiQ interface 296
7.4.2.7 X120 digital inputs (fail-safe)/EP terminal/temperature sensor 297
7.4.2.8 X121 digital inputs/outputs 299
7.4.2.9 X124 Electronics power supply 301
7.4.2.10 X127 LAN (Ethernet) 302
7.4.2.11 X130 digital input (fail safe) digital output 303
7.4.2.12 X131 digital inputs/outputs and analog input 304
7.4.2.13 Measuring sockets 306
7.4.2.14 S5 DIP switch 306
7.4.2.15 DIAG button 306
7.4.2.16 RESET button 306
7.4.2.17 Memory card 307
7.4.3 Connection examples 308
7.4.4 Meaning of the LEDs 310
7.4.4.1 Function of the LEDs 310
7.4.4.2 Behavior of the LEDs during booting 311
7.4.4.3 Behavior of the LEDs in the operating state 312
7.4.5 Dimension drawing 314
7.4.6 Technical data 315

7.5 Control Unit Adapter CUA31 316
7.5.1 Description 316
7.5.2 Interface description 317
7.5.2.1 Overview 317
7.5.2.2 X200-X202 DRIVE-CLiQ interfaces 318
7.5.2.3 X210 EP terminal / temperature sensor 319
7.5.2.4 X224 electronics power supply 320
7.5.3 Connection example 320
7.5.4 Meaning of the LEDs 321
7.5.5 Dimension drawing 321
7.5.6 Technical data 322

7.6 Control Unit Adapter CUA32 323
7.6.1 Description 323

7.6.2 Interface description ... 324
7.6.2.1 Overview ... 324
7.6.2.2 X200-X202 DRIVE-CLiQ interfaces ... 325
7.6.2.3 X210 EP terminal / temperature sensor ... 326
7.6.2.4 X220 HTL/TTL/SSI encoder interface ... 327
7.6.2.5 X224 electronics power supply ... 329
7.6.3 Connection example ... 329
7.6.4 Meaning of the LEDs ... 330
7.6.5 Dimension drawing ... 331
7.6.6 Technical data ... 331

7.7 Mounting Control Units and Control Unit Adapters ... 332

7.8 Basic Operator Panel BOP20 ... 334
7.8.1 Description ... 334
7.8.2 Interface description ... 334
7.8.3 Mounting ... 337

8 Supplementary system components and encoder system integration ... 341

8.1 Sensor Modules ... 341
8.1.1 Safety instructions for Sensor Modules Cabinet-Mounted ... 341
8.1.2 Sensor Module Cabinet-Mounted SMC10 ... 343
8.1.2.1 Description ... 343
8.1.2.2 Interface description ... 343
8.1.2.3 Meaning of the LEDs ... 347
8.1.2.4 Dimension drawing ... 348
8.1.2.5 Mounting ... 349
8.1.2.6 Technical data ... 350
8.1.3 Sensor Module Cabinet-Mounted SMC20 ... 352
8.1.3.1 Description ... 352
8.1.3.2 Interface description ... 352
8.1.3.3 Meaning of the LEDs ... 356
8.1.3.4 Dimension drawing ... 357
8.1.3.5 Mounting ... 358
8.1.3.6 Technical data ... 359
8.1.4 Sensor Module Cabinet-Mounted SMC30 ... 360
8.1.4.1 Description ... 360
8.1.4.2 Interface description ... 360
8.1.4.3 Connection examples ... 367
8.1.4.4 Meaning of the LEDs ... 369
8.1.4.5 Dimension drawing ... 370
8.1.4.6 Mounting ... 371
8.1.4.7 Protective conductor connection and shield support ... 372
8.1.4.8 Technical data ... 373

8.2 Option module Safe Brake Relay ... 378
8.2.1 Introduction ... 378
8.2.2 Safety instructions for Safe Brake Relays ... 378
8.2.3 Interface description ... 379
8.2.3.1 Overview ... 379
8.2.3.2 X524 electronics power supply ... 379
8.2.3.3 Brake connection ... 380
8.2.4 Connection example ... 380
8.2.5 Dimension drawing ... 381

8.2.6 Mounting 382
8.2.7 Technical data 383

8.3 Safe Brake Adapter optional module 384
8.3.1 Description 384
8.3.2 Safety instructions for Safe Brake Adapters 385
8.3.3 Interface description 386
8.3.3.1 Overview 386
8.3.3.2 X11 interface to the Control Interface Module 387
8.3.3.3 X12 230 V AC power supply 387
8.3.3.4 X14 load connection 388
8.3.3.5 X15 fast de-energization 388
8.3.4 Connection example 389
8.3.5 Dimension drawing 389
8.3.6 Mounting 390
8.3.7 Technical data 390

9 Accessories 391

9.1 DRIVE-CLiQ cabinet bushing 391
9.1.1 Description 391
9.1.2 Interface description 392
9.1.2.1 Overview 392
9.1.3 Dimension drawings 393
9.1.4 Installation 394
9.1.4.1 DRIVE-CLiQ cabinet bushing for cables with DRIVE-CLiQ connectors 394
9.1.4.2 DRIVE-CLiQ cabinet bushing for cables with M12 plug/socket 396
9.1.5 Technical data 397

9.2 DRIVE-CLiQ coupling 398
9.2.1 Description 398
9.2.2 Interface description 398
9.2.2.1 Overview 398
9.2.3 Dimension drawing 399
9.2.4 Mounting 399
9.2.5 Technical data 400

9.3 Mounting frame 401
9.3.1 Description 401
9.3.2 Dimension drawings 402
9.3.3 Mounting 403

9.4 Shield connection kit 404
9.4.1 Description 404
9.4.2 Dimension drawings 405
9.4.2.1 Shield connection kits 405
9.4.2.2 Blocksize Power Modules with shield connection kit 407
9.4.3 Mounting 412
9.4.3.1 PM340 Blocksize Power Modules 412
9.4.3.2 Power cable connection 415

10 Cabinet design and EMC for components, Blocksize format 417

10.1 General information 417

10.2 Safety instructions for control panel manufacturing 418

10.3 Notes on electromagnetic compatibility (EMC) ... 419

10.4 Cable shielding and routing ... 420

10.5 24 V DC Supply Voltage ... 422
10.5.1 General ... 422
10.5.2 Overcurrent protection ... 423
10.5.3 Overvoltage protection ... 424
10.5.4 Typical 24 V current consumption of the components ... 425
10.5.5 Selecting power supply units ... 426

10.6 Connection Methods ... 427
10.6.1 DRIVE-CLiQ signal cables ... 427
10.6.1.1 Overview ... 427
10.6.1.2 DRIVE-CLiQ signal cables without 24 V DC cores ... 428
10.6.1.3 DRIVE-CLiQ signal cables MOTION-CONNECT with DRIVE-CLiQ connectors ... 429
10.6.1.4 MOTION-CONNECT DRIVE-CLiQ signal cables with DRIVE-CLiQ connector and M12 socket ... 429
10.6.1.5 Comparison of DRIVE-CLiQ signal cables ... 431
10.6.1.6 Combined use of MOTION-CONNECT 500 and MOTION-CONNECT 800PLUS ... 432
10.6.2 Power cables for motors ... 433
10.6.2.1 Configuring the cable length ... 433
10.6.2.2 Comparison of MOTION-CONNECT power cables ... 434
10.6.3 Current-carrying capacity and derating factors for power cables and signal cables ... 435
10.6.4 Spring-loaded terminals ... 437
10.6.5 Screw terminals ... 437

10.7 Protective connection and equipotential bonding ... 438

10.8 Arrangement of components and equipment ... 440
10.8.1 General ... 440
10.8.2 Mounting ... 441

10.9 Information on control cabinet cooling ... 443
10.9.1 General ... 443
10.9.2 Ventilation ... 445
10.9.3 Power loss of components in rated operation ... 447
10.9.3.1 General ... 447
10.9.3.2 Power loss of Control Units, Control Unit Adapters and Sensor Modules ... 447
10.9.3.3 Power loss for line reactors and line filters ... 448
10.9.3.4 Power loss for Power Modules ... 450

11 Service and maintenance ... 453

11.1 Safety instructions for service and maintenance ... 453

11.2 Service and maintenance for components, Blocksize format ... 454
11.2.1 Replacing hardware components ... 454
11.2.2 Replacing the fan CU310-2 DP and CU310-2 PN ... 454
11.2.3 Replacing the fan on the PM240-2 ... 456
11.2.4 Replacing the fan on the PM340 ... 457

11.3 Service and maintenance for Chassis format components ... 463
11.3.1 Maintenance ... 463
11.3.2 Installation equipment ... 465
11.3.3 Replacing components ... 466
11.3.3.1 Replacing the Powerblock, Power Module, frame size FX ... 466

11.3.3.2 Replacing the Powerblock, Power Module, frame size GX 469
11.3.3.3 Replacing the Control Interface Module, Power Module, frame size FX 472
11.3.3.4 Replacing the Control Interface Module, Power Module, frame size GX 474
11.3.3.5 Replacing the fan, Power Module, frame size FX 476
11.3.3.6 Replacing the fan, Power Module, frame size GX 478

11.4 Forming the DC link capacitors 480

11.5 Spare parts 484

11.6 Recycling and disposal 484

A Appendix 485

A.1 List of abbreviations 485

A.2 Documentation overview 494

Index 495

Fundamental safety instructions 1

1.1 General safety instructions

⚠ DANGER

Danger to life due to live parts and other energy sources

Death or serious injury can result when live parts are touched.

- Only work on electrical devices when you are qualified for this job.
- Always observe the country-specific safety rules.

Generally, six steps apply when establishing safety:

1. Prepare for shutdown and notify all those who will be affected by the procedure.
2. Disconnect the machine from the supply.
   - Switch off the machine.
   - Wait until the discharge time specified on the warning labels has elapsed.
   - Check that it really is in a no-voltage condition, from phase conductor to phase conductor and phase conductor to protective conductor.
   - Check whether the existing auxiliary supply circuits are de-energized.
   - Ensure that the motors cannot move.
3. Identify all other dangerous energy sources, e.g. compressed air, hydraulic systems, or water.
4. Isolate or neutralize all hazardous energy sources by closing switches, grounding or short-circuiting or closing valves, for example.
5. Secure the energy sources against switching on again.
6. Ensure that the correct machine is completely interlocked.

After you have completed the work, restore the operational readiness in the inverse sequence.

⚠ WARNING

Danger to life through a hazardous voltage when connecting an unsuitable power supply

Touching live components can result in death or severe injury.

- Only use power supplies that provide SELV (Safety Extra Low Voltage) or PELV-(Protective Extra Low Voltage) output voltages for all connections and terminals of the electronics modules.

⚠ WARNING

Danger to life when live parts are touched on damaged devices

Improper handling of devices can cause damage.

For damaged devices, hazardous voltages can be present at the enclosure or at exposed components; if touched, this can result in death or severe injury.

- Ensure compliance with the limit values specified in the technical data during transport, storage and operation.
- Do not use any damaged devices.

⚠ WARNING

Danger to life through electric shock due to unconnected cable shields

Hazardous touch voltages can occur through capacitive cross-coupling due to unconnected cable shields.

- As a minimum, connect cable shields and the conductors of power cables that are not used (e.g. brake cores) at one end at the grounded housing potential.

⚠ WARNING

Danger to life due to electric shock when not grounded

For missing or incorrectly implemented protective conductor connection for devices with protection class I, high voltages can be present at open, exposed parts, which when touched, can result in death or severe injury.

- Ground the device in compliance with the applicable regulations.

⚠ WARNING

Danger to life due to electric shock when opening plug connections in operation

When opening plug connections in operation, arcs can result in severe injury or death.

- Only open plug connections when the equipment is in a no-voltage state, unless it has been explicitly stated that they can be opened in operation.

⚠ WARNING

Danger to life due to fire spreading if housing is inadequate

Fire and smoke development can cause severe personal injury or material damage.

- Install devices without a protective housing in a metal control cabinet (or protect the device by another equivalent measure) in such a way that contact with fire is prevented.
- Ensure that smoke can only escape via controlled and monitored paths.

⚠ WARNING

Danger to life through unexpected movement of machines when using mobile wireless devices or mobile phones

Using mobile wireless devices or mobile phones with a transmit power > 1 W closer than approx. 2 m to the components may cause the devices to malfunction, influence the functional safety of machines therefore putting people at risk or causing material damage.

- Switch the wireless devices or mobile phones off in the immediate vicinity of the components.

⚠ WARNING

Danger to life due to the motor catching fire in the event of insulation overload

There is higher stress on the motor insulation through a ground fault in an IT system. If the insulation fails, it is possible that death or severe injury can occur as a result of smoke and fire.

- Use a monitoring device that signals an insulation fault.
- Correct the fault as quickly as possible so the motor insulation is not overloaded.

⚠ WARNING

Danger to life due to fire if overheating occurs because of insufficient ventilation clearances

Inadequate ventilation clearances can cause overheating of components with subsequent fire and smoke. This can cause severe injury or even death. This can also result in increased downtime and reduced service lives for devices/systems.

- Ensure compliance with the specified minimum clearance as ventilation clearance for the respective component.

⚠ WARNING

Danger of an accident occurring due to missing or illegible warning labels

Missing or illegible warning labels can result in accidents involving death or serious injury.

- Check that the warning labels are complete based on the documentation.
- Attach any missing warning labels to the components, in the national language if necessary.
- Replace illegible warning labels.

NOTICE

Device damage caused by incorrect voltage/insulation tests

Incorrect voltage/insulation tests can damage the device.

- Before carrying out a voltage/insulation check of the system/machine, disconnect the devices as all converters and motors have been subject to a high voltage test by the manufacturer, and therefore it is not necessary to perform an additional test within the system/machine.

⚠ WARNING

Danger to life when safety functions are inactive

Safety functions that are inactive or that have not been adjusted accordingly can cause operational faults on machines that could lead to serious injury or death.

- Observe the information in the appropriate product documentation before commissioning.
- Carry out a safety inspection for functions relevant to safety on the entire system, including all safety-related components.
- Ensure that the safety functions used in your drives and automation tasks are adjusted and activated through appropriate parameterizing.
- Perform a function test.
- Only put your plant into live operation once you have guaranteed that the functions relevant to safety are running correctly.

Note

Important safety notices for safety functions

If you want to use safety functions, you must observe the safety notices in the safety manuals.

1.2 Safety instructions for electromagnetic fields (EMF)

⚠ WARNING

Danger to life from electromagnetic fields

Electromagnetic fields (EMF) are generated by the operation of electrical power equipment such as transformers, converters or motors.

People with pacemakers or implants are at a special risk in the immediate vicinity of these devices/systems.

- Ensure that the persons involved are the necessary distance away (minimum 2 m).

1.3 Handling electrostatic sensitive devices (ESD)

Electrostatic sensitive devices (ESD) are individual components, integrated circuits, modules or devices that may be damaged by either electric fields or electrostatic discharge.

NOTICE

Damage through electric fields or electrostatic discharge

Electric fields or electrostatic discharge can cause malfunctions through damaged individual components, integrated circuits, modules or devices.

- Only pack, store, transport and send electronic components, modules or devices in their original packaging or in other suitable materials, e.g conductive foam rubber of aluminum foil.
- Only touch components, modules and devices when you are grounded by one of the following methods:
  - Wearing an ESD wrist strap
  - Wearing ESD shoes or ESD grounding straps in ESD areas with conductive flooring
- Only place electronic components, modules or devices on conductive surfaces (table with ESD surface, conductive ESD foam, ESD packaging, ESD transport container).

1.4 Industrial security

Note

Industrial security

Siemens provides automation and drive products with industrial security functions that support the secure operation of plants or machines. They are an important component in a holistic industrial security concept. With this in mind, our products undergo continuous development. We therefore recommend that you keep yourself informed with the latest information and updates of our product.

Information and newsletters can be found at:

http://support.automation.siemens.com

To ensure the secure operation of a plant or machine, it is also necessary to take suitable preventive action (e.g. cell protection concept) and to integrate the automation and drive components into a state-of-the-art holistic industrial security concept for the entire plant or machine. Any third-party products used must also be taken into account.

For more detailed information, go to:

http://www.siemens.com/industrialsecurity

⚠ WARNING

Danger as a result of unsafe operating states resulting from software manipulation

Software manipulation (e.g. by viruses, Trojan horses, malware, worms) can cause unsafe operating states to develop in your installation which can lead to death, severe injuries and/or material damage.

- Keep the software up to date.

  Information and newsletters can be found at:

  http://support.automation.siemens.com
- Incorporate the automation and drive components into a state-of-the-art, integrated industrial security concept for the installation or machine.

  For more detailed information, go to:

  http://www.siemens.com/industrialsecurity
- Make sure that you include all installed products into the integrated industrial security concept.

1.5 Residual risks of power drive systems

The control and drive components of a drive system are approved for industrial and commercial use in industrial line supplies. Their use in public line supplies requires a different configuration and/or additional measures.

These components may only be operated in closed housings or in higher-level control cabinets with protective covers that are closed, and when all of the protective devices are used.

These components may only be handled by qualified and trained technical personnel who are knowledgeable and observe all of the safety instructions on the components and in the associated technical user documentation.

When assessing the machine's risk in accordance with the respective local regulations (e.g., EC Machinery Directive), the machine manufacturer must take into account the following residual risks emanating from the control and drive components of a drive system:

1. Unintentional movements of driven machine components during commissioning, operation, maintenance, and repairs caused by, for example:
   - Hardware defects and/or software errors in the sensors, controllers, actuators, and connection technology
   - Response times of the controller and drive
   - Operating and/or ambient conditions outside of the specification
   - Condensation / conductive contamination
   - Parameterization, programming, cabling, and installation errors
   - Use of radio devices / cellular phones in the immediate vicinity of the controller
   - External influences / damage

2. In the event of a fault, exceptionally high temperatures, including an open fire, as well as emissions of light, noise, particles, gases, etc. can occur inside and outside the inverter, e.g.:
   - Component malfunctions
   - Software errors
   - Operating and/or ambient conditions outside of the specification
   - External influences / damage

   Inverters of the Open Type / IP20 degree of protection must be installed in a metal control cabinet (or protected by another equivalent measure) such that the contact with fire inside and outside the inverter is not possible.
3. Hazardous shock voltages caused by, for example:
   - Component malfunctions
   - Influence of electrostatic charging
   - Induction of voltages in moving motors
   - Operating and/or ambient conditions outside of the specification
   - Condensation / conductive contamination
   - External influences / damage
4. Electrical, magnetic and electromagnetic fields generated in operation that can pose a risk to people with a pacemaker, implants or metal replacement joints, etc. if they are too close.
5. Release of environmental pollutants or emissions as a result of improper operation of the system and/or failure to dispose of components safely and correctly.

Note

The components must be protected against conductive contamination (e.g. by installing them in a control cabinet with degree of protection IP54 according to IEC 60529 or NEMA 12).

Assuming that conductive contamination at the installation site can definitely be excluded, a lower degree of cabinet protection may be permitted.

For more information about residual risks of the components in a drive system, see the relevant sections in the technical user documentation.

System overview

2

2.1 Field of application

SINAMICS is the family of drives from Siemens designed for machine and plant engineering applications. SINAMICS offers solutions for all drive tasks:

- Simple pump and fan applications in the process industry.
- Complex single drives in centrifuges, presses, extruders, elevators, as well as conveyor and transport systems
- Drive line-ups in textile, plastic film, and paper machines as well as in rolling mill plants.
- High precision servo drives in the manufacture of wind turbines
- Highly dynamic servo drives for machine tools, as well as packaging and printing machines

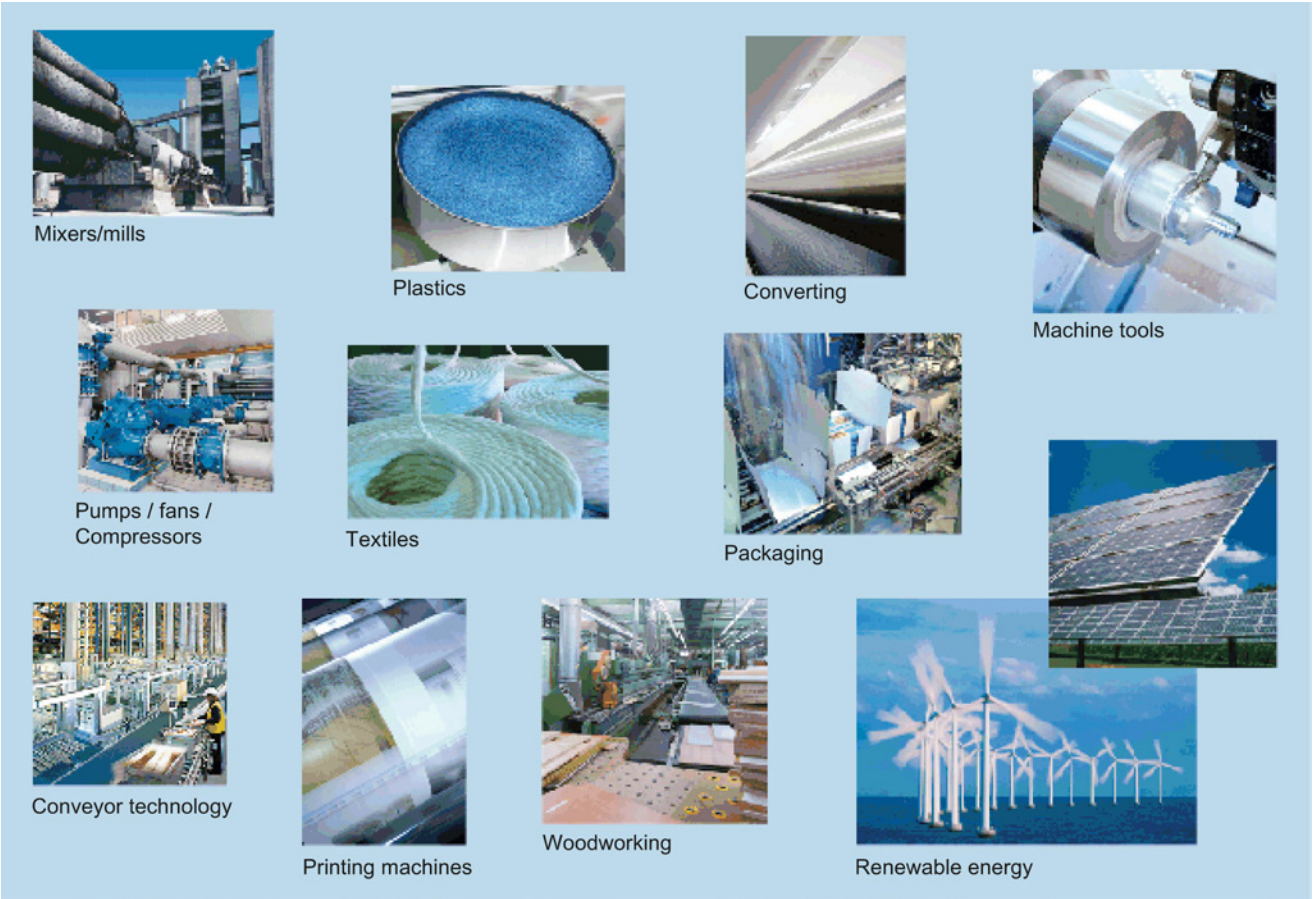

Figure 2-1 SINAMICS applications

Depending on the application, the SINAMICS range offers the ideal version for any drive task.

- SINAMICS G is designed for standard applications with induction motors. These applications have less stringent requirements regarding the dynamic performance of the motor speed.
- SINAMICS S handles complex drive tasks with synchronous/induction motors and fulfills stringent requirements regarding
  - Dynamics and accuracy
  - The integration of extensive technical functions in the drive control system
- SINAMICS DC MASTER is the DC drive belonging to the SINAMICS family. As a result of its standard expandability, it addresses both basic as well as demanding drive applications and in complementary markets.

2.2 Platform Concept and Totally Integrated Automation

All SINAMICS versions are based on a platform concept. Joint hardware and software components, as well as standardized tools for design, configuration, and commissioning tasks ensure high-level integration across all components. SINAMICS handles a wide variety of drive tasks with no system gaps. The different SINAMICS versions can be easily combined with each other.

Totally Integrated Automation (TIA) with SINAMICS S120

SINAMICS is one of the core components of TIA alongside SIMATIC, SIMOTION and SINUMERIK. The STARTER commissioning tool is an integral element of the TIA platform. It is thus possible to parameterize, program and commission all components in the automation system using a standardized engineering platform and without any gaps. The system-wide data management functions ensure consistent data and simplify archiving of the entire plant project.

PROFIBUS DP, the standard field bus of the TIA system, is supported by all SINAMICS S120 variants. It provides a high-performance, system-wide communication network which links all automation components: HMI, controls, drives and I/O devices.

SINAMICS S120 is also available with a PROFINET interface. This Ethernet-based bus allows the rapid exchange of control data via PROFINET IO.

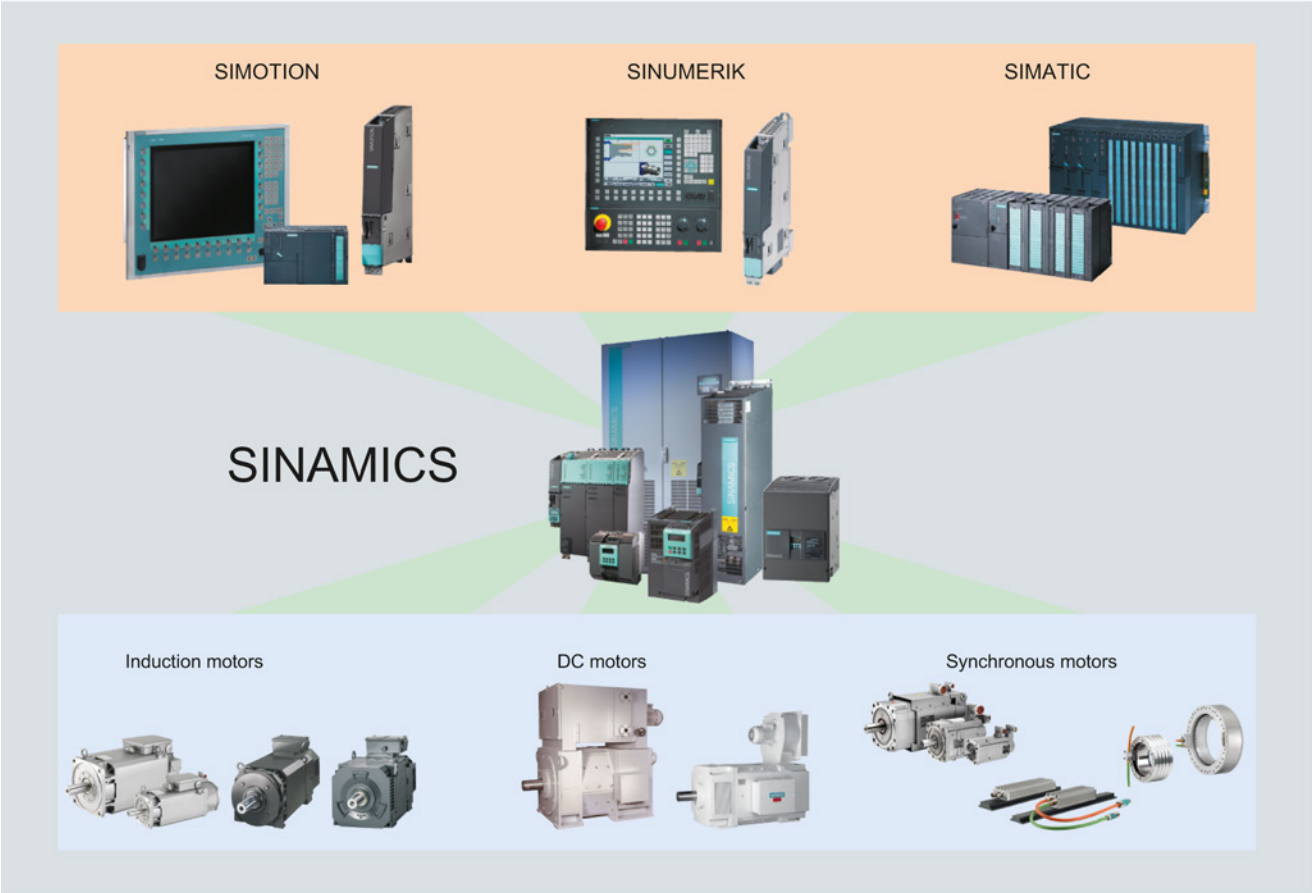

Figure 2-2 SINAMICS as part of the Siemens modular automation system

2.3 Overview, SINAMICS S120 AC Drive

SINAMICS S120 AC Drive is a modular drive system for individual axes and addresses sophisticated drive tasks for an extremely wide range of industrial applications.

Applications include:

- Machine concepts with a central drive (e.g. presses, printing, packaging)
- Modular machine concepts where the machine modules were broken down into single axes
- Single-motor drives that when compared to standard drives have a high accuracy, stability and smooth running requirements in machinery and industrial plant construction
- Single-motor drives for transport applications (conveying, raising, lowering)
- Drives without regenerative feedback into the line supply (wire-drawing, extruding)
- Drive groups with high requirements placed on the availability (when the infeed fails, this may not cause all of the axes to fail)

The combination of a power unit (Power Module) and a Control Unit (CU) or a Control Unit Adapter form a single-motor drive in a compact design for machinery and plant construction.

SIZER, a high-performance engineering tool, makes it easier to choose and determine the optimum drive configuration. The drive can be simply commissioned a user-friendly fashion using the STARTER commissioning tool.

SINAMICS S120 AC Drive is supplemented by a wide range of motors. Whether synchronous or induction, whether rotary or linear motors, all motor types are supported by SINAMICS S120 AC Drive.

2.4 SINAMICS S120 components

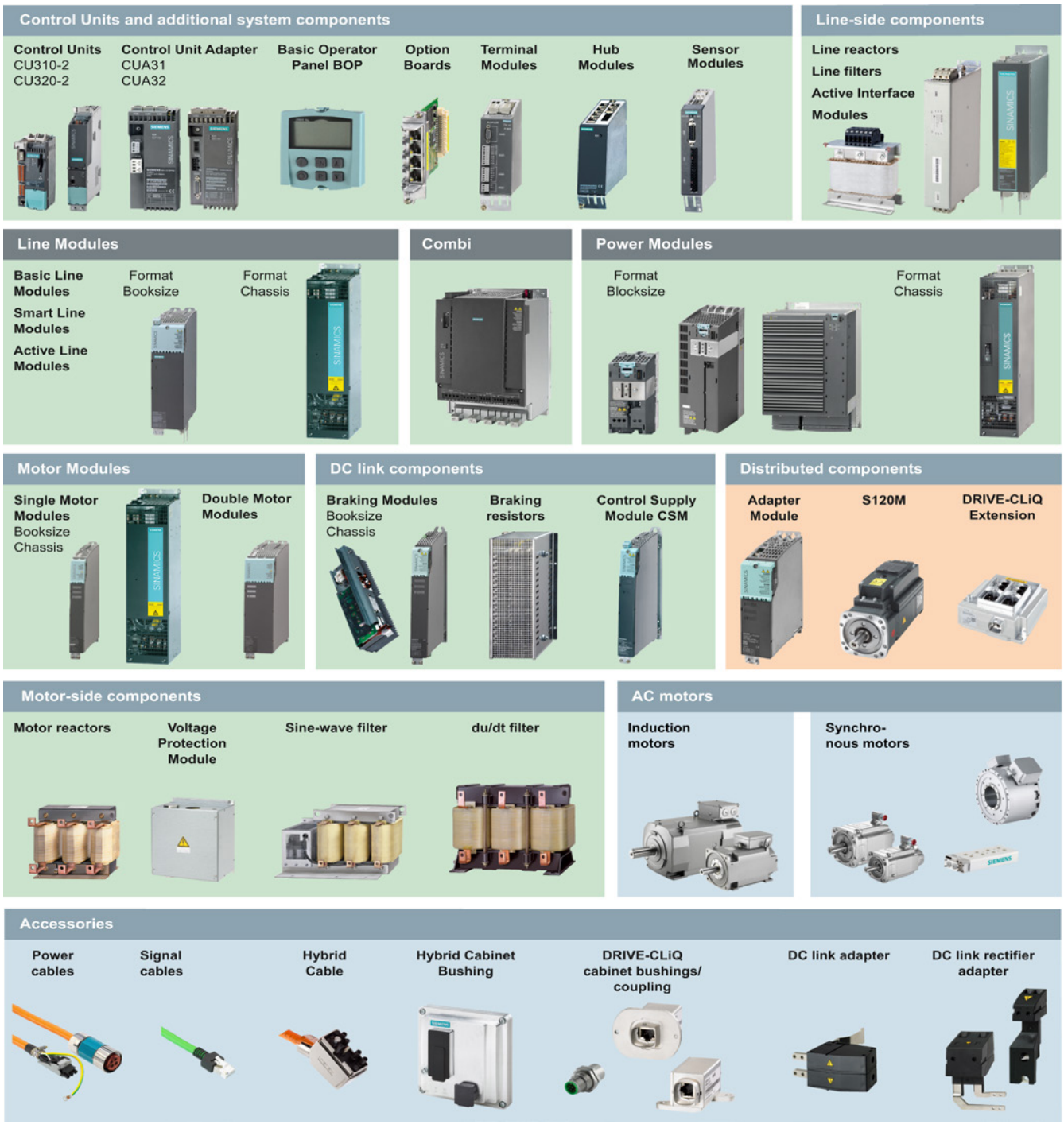

Figure 2-3 SINAMICS S120 component overview

The following system components are available for SINAMICS S120 AC Drive:

- Line-side power components, such as fuses, contactors, reactors and line filters for switching the power supply and complying with EMC regulations.
- Power Modules (either with or without integrated line filter) and an integrated braking chopper to provide power to the connected motor

To address the required functions, SINAMICS S120 AC Drive is equipped with:

- Control Units that provide the drive and technological functions
- Additional system components to expand the functionality and to handle various interfaces for encoders and process signals.

The SINAMICS S120 AC Drive components were developed for installation in cabinets.

They have the following features and characteristics:

- Easy to handle, simple installation and wiring
- Practical connection system, cable routing in accordance with EMC requirements
- Uniform design

2.5 System data

Table 2- 1 Electrical data

Line connection voltage	
Blocksize format units	1-phase 200 … 240 VAC ±10% 3-phase 200 … 240 VAC ±10% 3-phase 380 … 480 VAC ±10%
Chassis format units	3-phase 380 … 480 VAC ±10%
Rated pulse frequency	
Blocksize format units	4 kHz At higher pulse frequencies, the corresponding characteristic for current derating must be taken into consideration.
Chassis format units	2 kHz At higher pulse frequencies, the corresponding characteristic for current derating must be taken into consideration.
Line frequency	47 … 63 Hz
Output voltage	
Blocksize format units	0 V to 0.74 line supply voltage for devices with 1-phase 200 … 240 VAC 0 V to 0.95 line supply voltage for devices with 3-phase 200 … 240 VAC 0 V to 0.95 line supply voltage for devices with 3-phase 380 … 480 VAC
Chassis format units	0 V to line supply voltage for 3-phase 380 VAC to 480 VAC units
Electronics power supply	24 VDC -15/+20% [1], Safety extra-low voltage PELV or SELV (see Chapter 24 V DC Supply Voltage (Page 422))
Short-circuit current rating SCCR according to UL508C (up to 600 V)	• 1.1 … 447 kW: 65 kA • 448 … 671 kW: 84 kA • 672 … 1193 kW: 170 kA • ≥ 1194 kW: 200 kA For Blocksize and Chassis components, UL certification applies only in conjunction with the fuses prescribed by Siemens and not with other types or just with circuit-breakers.
Electromagnetic compatibility according to EN 61800-3	Category C3 (option) Category C2 (option) Category C1 (option) for systems implemented in conformance with the documentation
Overvoltage category	III
Degree of pollution	2

[1] If a motor holding brake is used, restricted voltage tolerances (24 V ±10%) may have to be taken into account.

Table 2- 2 Environmental conditions

Degree of protection	IPXXB according to EN 60529, open type according to UL 508
Protection class, line supply circuits **Electronic circuits**	I (with protective conductor connection) safety extra-low voltage PELV / SELV
Type of cooling	Internal air cooling, power units with forced air cooling using an integrated fan
Permissible cooling medium temperature (air) and installation altitude in operation	0° C to +40° C and an installation altitude of up to 1000 m without derating, >40° C to +55° C, see derating characteristics Installation altitude >1000 m to 4000 m refer to the characteristic for current derating or reduction of the ambient temperature by 3.5 K per 500 m.
Chemically active substances	
Long-term storage in the transport packaging	Class 1C2 according to EN 60721-3-1
Transport in the transport packaging	Class 2C2 according to EN 60721-3-2
Operation	Class 3C2 according to EN 60721-3-3
Biological environmental conditions:	
Storage in the transport packaging	Class 1B1 according to EN 60721-3-1
Transport in the transport packaging	Class 2B1 according to EN 60721-3-2
Operation	Class 3B1 according to EN 60721-3-3
Vibratory load	
Long-term storage in the transport packaging	Class 1M2 according to EN 60721-3-1
Transport in the transport packaging	Class 2M3 according to EN 60721-3-2
Shock load	
Long-term storage in the transport packaging	Class 1M2 according to EN 60721-3-1
Transport in the transport packaging	Class 2M3 according to EN 60721-3-2
Operation	Class 2M2 according to EN 60721-3-2
Blocksize format FSA to FSB	Test values: 147 m/s^2 (15g)/11 ms
Blocksize format FSC to FSF	Test values: 49 m/s^2 (5g)/30 ms
Chassis format	Test values: 98 m/s^2 (10g)/20 ms
Climatic ambient conditions	
Long-term storage in the transport packaging	Class 1K4 according to EN 60721-3-1 Temperature: -25° C to +55° C
Transport in the transport packaging	Class 2K4 according to EN 60721-3-2 Temperature: -40° C to +70° C
Operation	Class 3K3 according to EN 60721-3-3 Temperature +0° C to +40° C Relative humidity: 5% to 90% Oil mist, salt mist, ice formation, condensation, dripping water, spray, splash water, water jets are not permitted

Table 2- 3 Certificates

Declarations of Conformity	CE (Low-Voltage and EMC Directive)
Approvals	cULus cURus

2.6 Derating as a function of the ambient temperature, pulse frequency, and installation altitude

Preliminary remark

The air pressure and therefore the air density drop at altitudes above sea level. At these altitudes, the same quantity of air does not have the same cooling effect and the air gap between two electrical conductors can only insulate a lower voltage. Typical values for air pressure are summarized in the table below:

Table 2- 4 Air pressure for various installation altitudes

Installation altitude above sea level in [m]	0	1000	2000	3000	4000
Air pressure in mbar [kPa]	100	90	80	70	62

Derating

The Power Modules are designed for operation under the following conditions:

- Ambient temperature 0° C up to 40° C
- The pulse frequency specified for each Power Module
- Installation altitude of up to 1000 m above MSL for Blocksize Power Modules.
- Up to 2000 m above MSL for Chassis Power Modules.

If you operate the Power Modules at higher ambient temperatures, pulse frequencies, or installation altitudes, you must reduce the output current.

You will find the reduction factors for the individual units in the technical data of the relevant Power Modules.

The maximum permissible ambient temperature for all Power Modules is 55° C.

A TN or TT system with grounded neutral point is required (no grounded phase conductor) for installation altitudes above 2000 m. If the neutral point is not grounded, an isolating transformer must be connected upstream for which the secondary windings are grounded at the neutral point.

A reduction of the line supply voltage phase-phase is not necessary.

Mains connection and line-side power components 3

3.1 Introduction

The following line-side components should be used to connect a SINAMICS drive line-up to the supply network:

- Line disconnector
- Overcurrent protection device (line fuses or circuit-breaker)
- Line contactor (this is required for electrical isolation)
- Line filter (optional)
- Line reactor (optional)

The possible supply voltages for the drive line-up are:

- 1-phase 200 VAC to 240 VAC ± 10%
- 3-phase 200 VAC to 240 VAC ± 10%
- 3-phase 380 VAC to 480 VAC ± 10%

The following line reactor variants are available:

- 4 versions for PM240-2 Blocksize format Power Modules, frame sizes FSA to FSC (stand-alone)
- 3 versions for PM340 Blocksize format Power Modules, frame sizes FSA to FSC (base)
- 5 versions for PM340 Blocksize format Power Modules, frame sizes FSD to FSF (3 base and 2 standalone)
- 4 versions for chassis format

The following line filter variants are available:

- Integrated
- External
  - Base
  - Stand-alone

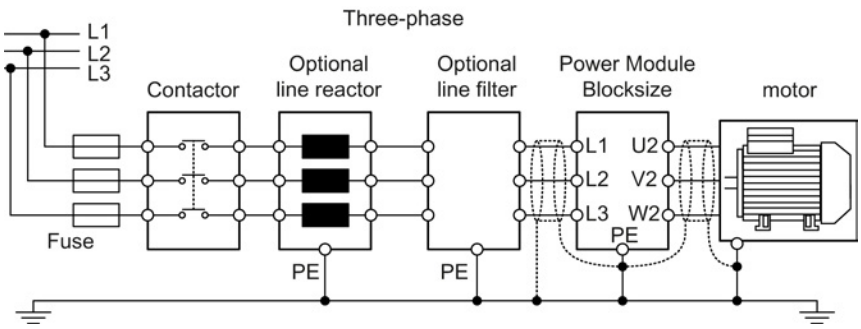

Figure 3-1 Example of a Blocksize line connection

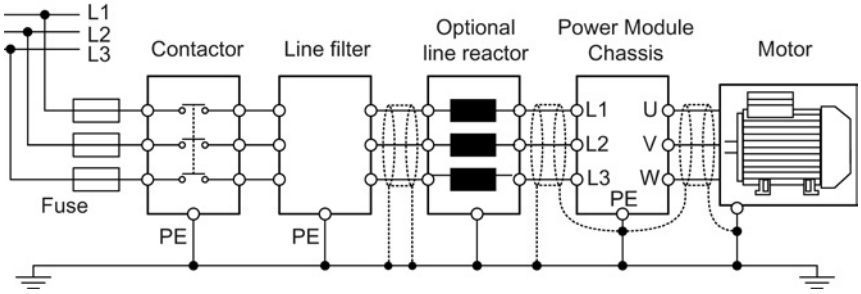

Figure 3-2 Example of a chassis line connection

3.2 Information on the disconnector unit

A disconnector unit is required for disconnecting the drive line-up from the supply system correctly. The disconnector unit of the machine's electrical equipment can be used for this purpose. The disconnector unit must be selected in compliance with the requirements of the internationally binding standard relating to the electrical equipment of machines IEC 60204-1, Section 5.3. The relevant technical data and any other loads connected to the electrical equipment must be taken into account when making your selection.

The accessories required for the line disconnector must be selected from the manufacturer catalogs. Refer also to catalogs PM21 and NC61.

NOTICE
Damage to the drive electronics when switching the line disconnection equipment under load When switching the line disconnection equipment (type according to the recommended selection) under load, then the contacts will be subject to premature wear. This can cause the line disconnection equipment to malfunction, with subsequent damage to the drive electronics. • Use a leading auxiliary break contactor and/or use a Voltage Sensing Module (VSM10). • If this is not possible, then avoid switching the line disconnection equipment under load.

3.3 Overcurrent protection by means of line fuses and circuit breakers

Line fuses or circuit-breakers must be used for cable protection/overcurrent protection. NH, D, and DO type fuses with a gL characteristic or suitable circuit-breakers according to IEC 60947 can be used for this purpose.

The appropriate fuses and circuit-breakers are listed in the technical data of the associated Power Module.

⚠ WARNING

Danger to life due to electric shock and fire hazard caused by overcurrent protective equipment tripping too late

Overcurrent protective equipment that trips too late or not all can cause electric shock or fire.

- To protect personnel and for fire protection purposes, at the infeed point, the short-circuit rating and loop impedance must match the specifications in the documentation for the installed overcurrent protection devices to trip within the specified time.
- In TT systems, besides suitable overcurrent protection equipment, also use residual current devices (RCD) and, as of an infeed power of 55 kW or in extensive installations, also use residual current monitors (RCM).

For further information: See catalog PM 21.

3.4 Using residual-current devices

Selectively tripping, AC/DC-sensitive residual current devices (type B) can be used in addition to the overcurrent protection devices.

Residual current devices have to be installed if the power supply conditions in terms of short-circuit power and loop impedance at the infeed point are not such that the installed overcurrent protection devices will trip within the prescribed period if a fault occurs.

Residual current operated circuit-breakers (RCD)

Residual current operated circuit-breakers (RCD) can be used in addition to the overcurrent protection devices provided. They prevent excessively high touch currents being maintained. They are the preferred solution for TT systems.

Note the following conditions when using residual current operated circuit-breakers:

- Only use type B delayed tripping, selective AC/DC residual current operated circuit-breakers.
- Ensure that the loop impedance is maintained corresponding to local installation regulations.
- It is absolutely imperative that you connect parts of the drive system and the machine that can be touched with the protective conductor of the plant or system.

- The shielded motor cable must not be longer than 50 m.
- Use a separate residual current operated circuit-breaker for each Power Module.
- Ensure that the switching elements (disconnector unit, contactors) for connecting and disconnecting the drive line-up have max. 35 ms delay time time between the closing/opening of the individual main contacts.

If no residual current device is used, touch protection can be ensured by means of double insulation or by isolating the Power Module from the supply system through a transformer.

Residual current monitors (RCM)

Used in conjunction with appropriate circuit-breakers, residual current monitors (RCMs) provide fire and system protection even at high levels of grounding resistance (in TT systems, for example). When operating on TT systems for infeed powers exceeding 55 kW, and with systems that extend across a large area, residual current monitors must be installed in addition to the appropriate circuit-breakers.

⚠ WARNING
Fire hazard and danger of a plant standstill when residual currents occur Residual currents in the power supply that are not detected can cause fires and failures in the entire system. • Always install residual current monitors in conjunction with suitable circuit-breakers.

Note the points below when using residual current monitors:

- Use only AC/DC-sensitive RCM type B devices with delayed tripping that guarantee reliable tripping even for smoothed DC residual currents.
- Connect parts of the power drive system and the machine that can be touched to the system's protective conductor.
- Do not route the protective conductor through the measuring current transformer because this would cancel its protection function.

3.5 Overvoltage protection

To protect the units against line-side surge voltages, you are advised to install an overvoltage protection device directly at the infeed point (upstream of the main switch). To comply with the requirements of CSA C22.2 No. 14-05, a type VZCA or VZCA2 surge arrester is absolutely mandatory. The Raycap company has suitable surge arresters.

3.6 Line contactors

A line contactor is required if the drive line-up needs to be electrically isolated from the power supply.

When selecting a line contactor, the characteristic values in the technical data apply. The cable routing, the bundling factor, and the factor for the ambient temperature according to EN 60204-1 must be taken into account when dimensioning the various cables.

NOTICE

Damage to the drive electronics when switching the line contactor under load

If you switch the line contactor (recommended type) under load, the contacts will wear out prematurely. This may lead to faulty functioning of the contactor with subsequent damage to the drive electronics.

- Use a leading auxiliary break contactor and/or use a Voltage Sensing Module (VSM10).
- If this is not possible, avoid switching the line contactor under load.

Note

To limit the switching overvoltage, the contactor coil must be connected to a surge suppression device (e.g. freewheeling diode or varistor).

When a digital output is used to control the line contactor, its switching capacity must be taken into account.

3.7 Line filter

3.7.1 Description

In conjunction with a suitably EMC-compliant system configuration, line filters limit the conducted interference emitted by the Power Modules to limit values according to EN 61800-3.

A line filter according to the catalog must be used for the SINAMICS S120 drive line-up.

3.7.2 Classification of EMC behavior

The EMC environments and the EMC categories are defined in the EMC product standard EN 61800-3 as follows:

Environments

First environment (public systems)

An environment that includes domestic premises and establishments that are connected directly to a public low-voltage line supply without the use of an intermediate transformer.

Examples: Houses, apartments, commercial premises, or offices in residential buildings.

Second environment (industrial systems)

An environment that includes all other establishments that are not connected directly to a public low-voltage line supply.

Examples: Industrial areas and technical areas of buildings that are supplied by an assigned transformer.

Categories

Category C1

Drive systems with a rated voltage < 1000 V, which are intended for use in the first environment.

Drive systems which correspond to category C1 can be installed in the first environment without restrictions.

Category C2

Drive systems with a rated voltage < 1000 V, which are neither plug-in devices nor moveable devices and which, when used in the first environment, are intended only to be installed and commissioned by an expert.

Drive systems which correspond to category C2 may only be used in the first environment if they are installed by an expert, with limit values for electromagnetic compatibility observed.

Category C3

Drive systems with a rated voltage < 1000 V, which are intended for use in the second environment and not for use in the first environment.

Drive systems which correspond to category C3 may only be installed in the second environment.

Category C4

Drive systems with a rated voltage ≥ 1000 V with an output current ≥ 400 A or for use in complex systems in the second environment

Drive systems which correspond to category C4 may only be installed in the second environment.

Note

Expert

An expert is a person or organization with the necessary experience for installing and/or commissioning drive systems (Power Drive Systems - PDS), including the associated EMC aspects.

3.7.3 Electromagnetic compatibility (EMC) of the system

Category C4

Unfiltered Power Modules meet Category C4 and can only be used in the second environment.

Category C3

Power Modules with an integrated or similar external line filter meet the limit values for Category C3.

Many of the Blocksize Power Modules are also available as variants with integrated line filters. One exception is the PM340 Power Module frame size FSA for line voltage 3-phase 380 VAC to 480 VAC. An external line filter must be used for this Power Module.

External line filters are available for Chassis Power Modules.

The Power Modules of Category C3 and can only be used in the second environment.

Category C2

To ensure that the Power Modules with the appropriate line filter meet the limit values of Category C2, the following conditions must be met:

- A shielded motor cable with low capacitance is used.
- The motor cable is

  - shorter than 50 m for PM240-2 Power Modules.
  - shorter than 25 m for PM340 Power Modules.
  - shorter than 100 m for Chassis Power Modules.
- The pulse frequency is
  - ≤ 4 kHz for Blocksize Power Modules.
  - ≤ 2 kHz for Chassis Power Modules.
- The current ≤ rated input current in the technical data.

For Chassis Power Modules, an additional line reactor is required to achieve Category C2.

The Power Modules of Category C2 are suitable for the second environment. With an additional line reactor with a line impedance U_k ≥ 4% or a low harmonic filter (LHF), the PM240-2 Power Modules will meet the requirements for the first environment.

Category C1

If the requirements of Category C2 are met, the PM240-2 Power Modules will meet with the limit values of Category C1 with external line filters. The Power Modules are intended for use in the first environment.

Note

Intended use of external line filters

If external line filters are used, the limit values of Category C3 and/or C2 will be met with Blocksize and Chassis PM340 Power Modules.

Whereas the use of external line filters with PM240-2 Blocksize Power Modules that already comply with EMC Category C2 will result in compliance with the limit values of EMC Category C1.

3.7.4 Safety instructions for line filters

⚠ WARNING

Danger to life if the fundamental safety instructions and residual risks are not observed

The non-observance of the fundamental safety instructions and residual risks stated in Chapter 1 can result in accidents with severe injuries or death.

- Observe the fundamental safety instructions.
- Consider the residual risks for the risk evaluation.

⚠ DANGER

Danger to life due to electric shock in the event of missing touch protection

Death or serious injury can result when live parts are touched.

- For the line filter, use touch protection according to IPXXA or corresponding to the local installation regulations.

⚠ WARNING

Danger of fire through overheating for insufficient ventilation clearances

Insufficient ventilation clearances result in overheating with danger to persons as a result of smoke and fire. Further, the line filter can be thermally damaged.

- Maintain 100 mm ventilation clearances above and below the line filter.

NOTICE

Damage due to multiple loads being connected to the same line infeed point

Damage may occur if multiple loads are connected to the same line infeed point.

- Suppress interference on the additional loads using appropriate line filters.

NOTICE

Line filter damage due to interchanged connections

Interchanging the input and output connections will damage the line filters.

- Connect the incoming line supply cable to LINE L1, L2, L3.
- Connect the outgoing cable to the Power Module at LOAD/LAST L1´, L2´, L3´ (U, V, W).

NOTICE

Damage of further loads due to incorrect line filters

Unsuitable line filters can cause line harmonics, which damage or destroy loads connected to the same line supply.

- Only use line filters released by SIEMENS for SINAMICS.

3.7.5 Dimension drawings

Blocksize line filter

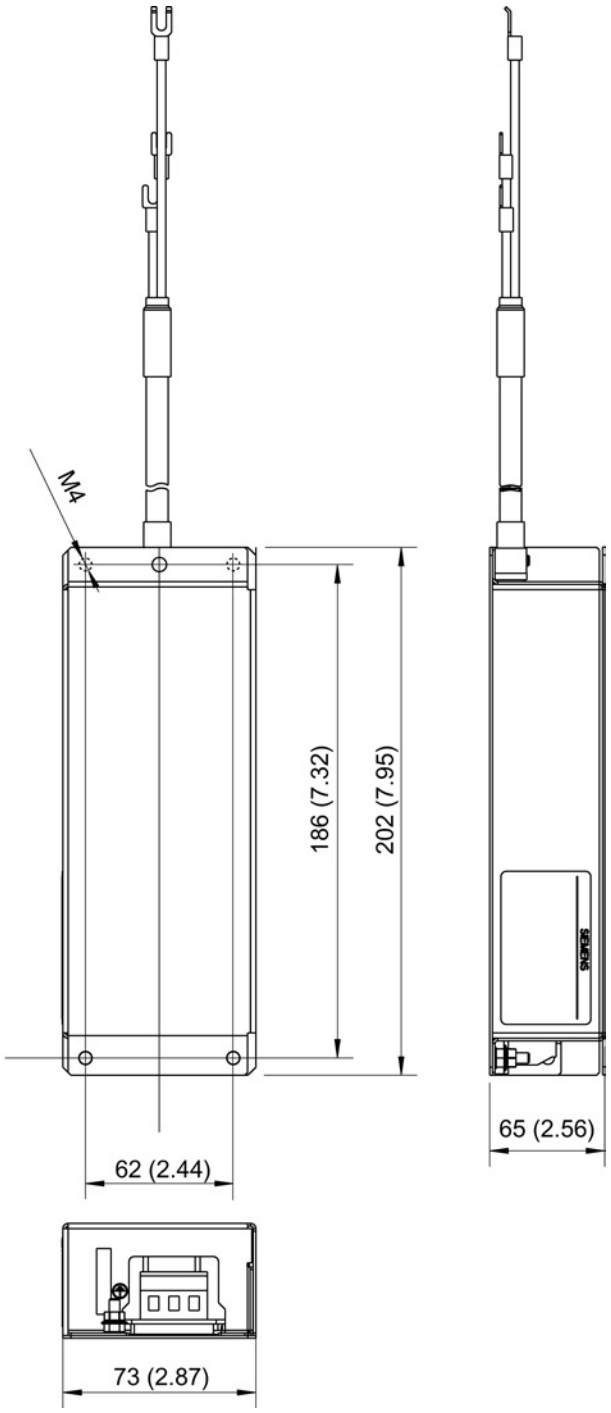

Figure 3-3 Dimension drawing of the line filter, Power Module PM240-2 frame size FSA, all data in mm (inches)

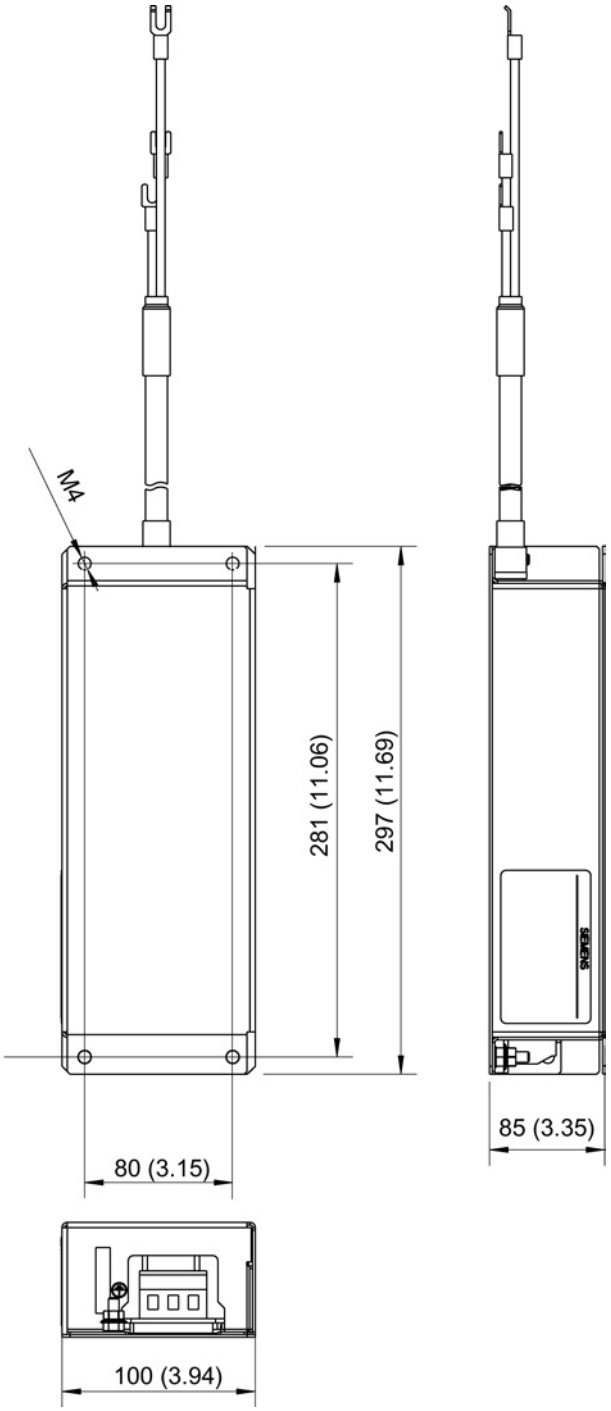

Figure 3-4 Dimension drawing of the line filter, Power Module PM240-2 frame size FSB, all data in mm (inches)

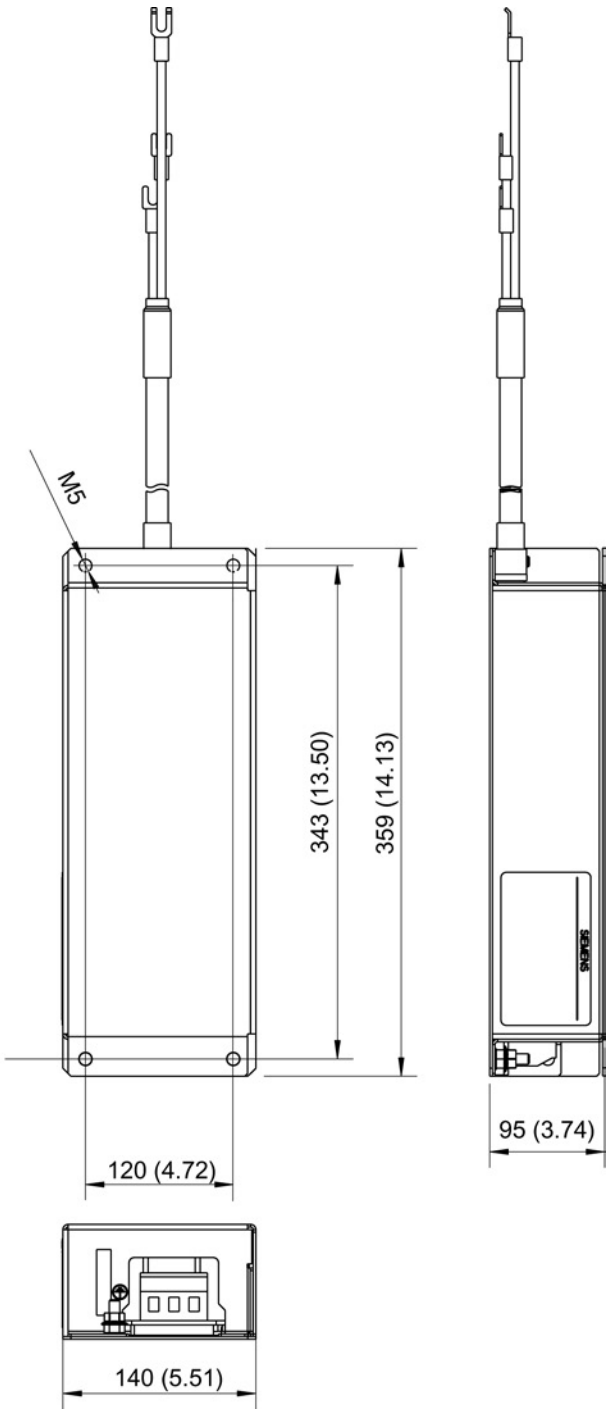

Figure 3-5 Dimension drawing of the line filter, Power Module PM240-2 frame size FSC, all data in mm (inches)

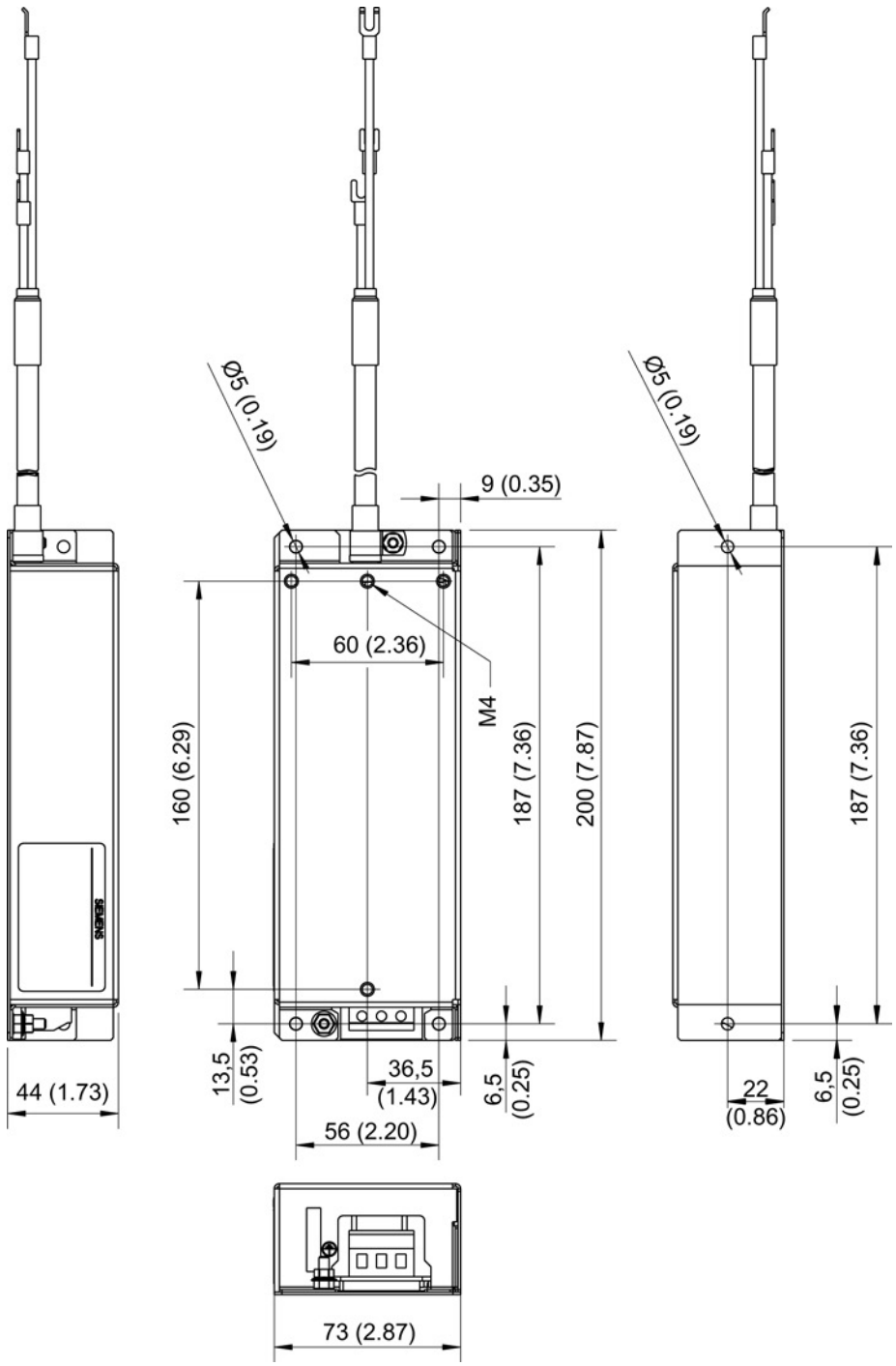

Figure 3-6 Dimension drawing of the line filter, PM340 Power Module frame size FSA, all data in mm (inches)

Chassis line filter

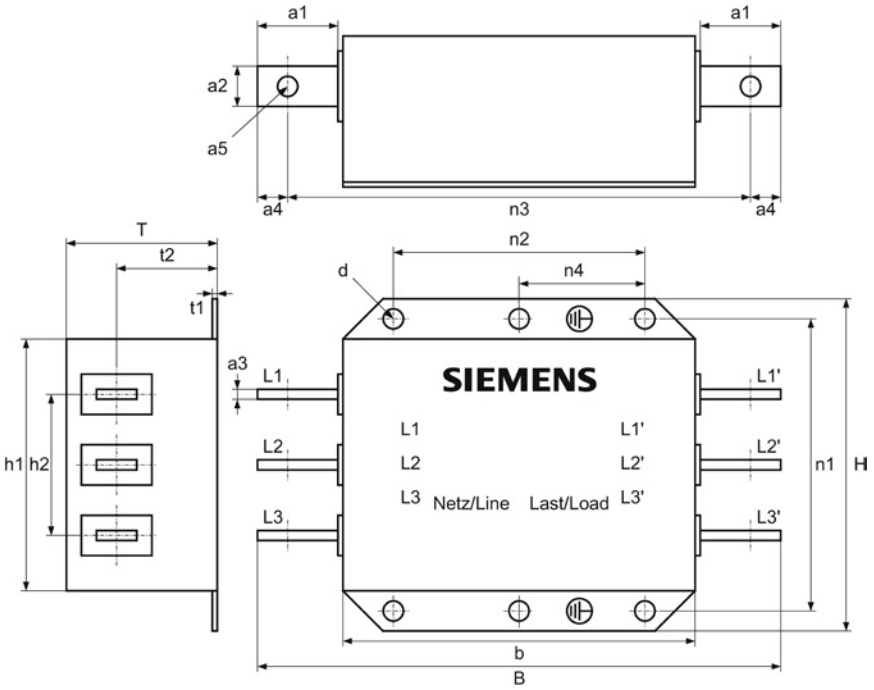

Figure 3-7 Dimension drawing, line filter

Table 3- 1 Dimensions of the line filter, all data in mm and (inches)

6SL3000-	0BE32-5AA0	0BE34-4AA0	0BE36-0AA0
B	360 (14.17)	360 (14.17)	400 (15.74)
H	240 (9.44)	240 (9.44)	265 (10.43)
D	116 (4.56)	116 (4.56)	140 (5.51)
a1	40 (1.57)	40 (1.57)	40 (1.57)
a2	25 (0.98)	25 (0.98)	25 (0.98)
a3	5 (0.19)	5 (0.19)	8 (0.31)
a4	15 (0.59)	15 (0.59)	15 (0.59)
a5	11 (0.43)	11 (0.43)	11 (0.43)
b	270 (10.62)	270 (10.62)	310 (12.20)
h1	200 (7.87)	200 (7.87)	215 (8.46)
h2	100 (3.93)	100 (3.93)	120 (4.72)
t1	2 (0.07)	2 (0.07)	3 (1.18)
t2	78,2 (3.07)	78,2 (3.07)	90 (3.54)
n1[1)]	220 (8.66)	220 (8.66)	240 (9.44)
n2[1)]	210 (8.26)	210 (8.26)	250 (9.84)
n3	330 (12.99)	330 (12.99)	370 (14.56)
n4	-	-	125 (4.92)
d	9 (0.35)	9 (0.35)	12 (0.47)

1) Lengths n1 and n2 correspond to the distance between holes

3.7.6 Mounting

The line filters are designed as base components. The line filter is retained on the mounting surface and the Power Module is mounted on the line filter in a space-saving fashion. The cables to the Power Modules are already connected at the line filter. The line filter is connected to the line supply through terminals.

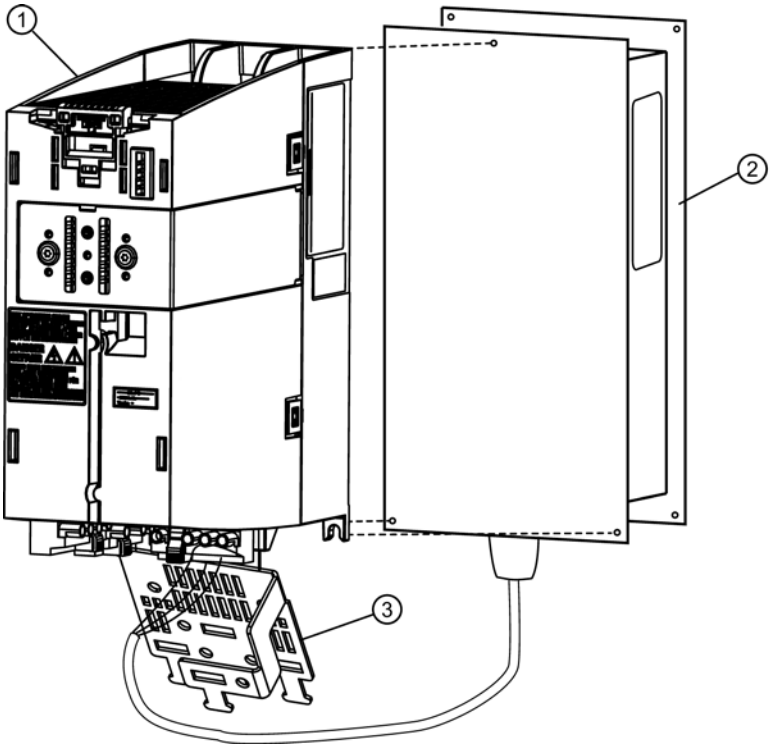

① PM240-2 Power Module, frame size FSA
② Line filter
③ Shield connection

Figure 3-8 Installation example: Power Module PM240-2 (frame size FSA) with screening kit and line filter

Table 3- 2 Connecting the line filter for the PM240-2 on the mounting surface

Frame size	Fastening	Tightening torque
FSA	4 x M4 bolts	2.5 Nm
FSB		
FSC	4 x M5 bolts	3 Nm

Table 3- 3 Connecting Power Module PM240-2 to the line filter

Frame size	Fastening	Tightening torque
FSA	3 x M4 bolts	2.5 Nm
FSB	4 x M4 bolts	2.5 Nm
FSC	4 x M5 bolts	3 Nm

3.7.7 Technical data

3.7.7.1 Technical data, Blocksize line filter

Table 3- 4 Technical data of line filter Blocksize PM240-2

Line voltage 3-phase 380 ... 480 VAC				
Line filter 6SL3203-		0BE17-7BA0	0BE21-8BA0	0BE23-8BA0
Frame size		FSA	FSB	FSC
Suitable for Power Module		Line voltage 3-phase 380 VAC - 10% to 480 VAC + 10%:		
		6SL3210-1PE11-8UL1 6SL3210-1PE12-3UL1 6SL3210-1PE13-2UL1 6SL3210-1PE14-3UL1 6SL3210-1PE16-1UL1 6SL3210-1PE18-0UL1 6SL3211-1PE18-0UL1	6SL3210-1PE21-1UL0 6SL3210-1PE21-4UL0 6SL3210-1PE21-8UL0 6SL3211-1PE21-8UL0	6SL3210-1PE22-7UL0 6SL3210-1PE23-3UL0 6SL3211-1PE23-3UL0
Unit rating of the Power Module	kW	4	7,5	18,5
Rated current	A	11,4	23,5	49,4
Power loss	W	13	22	39
Line supply connection L1, L2, L3		Max. connectable cross-section: 2.5 mm^2 Tightening torque: 0.6 … 0.8 Nm	Max. connectable cross-section: 6 mm^2 Tightening torque: 1.5 … 1.8 Nm	Max. connectable cross-section: 16 mm^2 Tightening torque: 2.0 … 2.3 Nm
Line supply connection L1', L2' L3', PE'		Cable (including PE') on the line filter		
PE connection ⏚		Max. connectable cross-section: 2.5 mm^2 Tightening torque: 2 ±0.1 Nm	Max. connectable cross-section: 6 mm^2 Tightening torque: 2 ±0.1 Nm	Max. connectable cross-section: 16 mm^2 Tightening torque: 3 ±0.5 Nm
Degree of protection		IP20	IP20	IP20
Weight	kg	1,75	4,0	7,3

Table 3- 5 Technical data, Blocksize line filter PM340

Line voltage 3-phase 380 ... 480 VAC		
Line filter 6SE6400-		2FA00-6AD0 FSA
Suitable for Power Module		6SL3210-1SE11-3UA0, 6SL3210-1SE11-7UA0 6SL3210-1SE12-2UA0, 6SL3210-1SE13-1UA0 6SL3210-1SE14-1UA0
Rated current	A	6
Power loss	W	< 5
Line supply connection L1, L2, L3		2.5 mm screw terminals[2]
Load connection U, V, W		Shielded cable 4 x 1.5 mm^2 (including PE) 0.24 m
PE connection		At the housing with M4 stud
Degree of protection		IP20 or IPXXB
Weight, approx.	kg	0,5

3.7.7.2 Technical data, Chassis line filter

Table 3- 6 Technical data, Chassis line filter

Order number	6SL3000-	0BE32-5AA0	0BE34-4AA0	0BE34-4AA0	0BE34-4AA0	0BE36-0AA0
Suitable for Power Module	6SL3310-	1TE32-1AAx	1TE32-6AAx	1TE33-1AAx	1TE33-8AAx	1TE35-0AAx
Unit rating of the Power Module	kW	110	132	160	200	250
Rated voltage	V	380 V 3 AC -10 % … 480 V 3 AC +10 % (-15 % < 1 min), 47 … 63 Hz				
Rated current	A	250	440	440	440	600
Power loss	kW	0,015	0,047	0,047	0,047	0,053
Line supply/load connection L1, L2, L3 / L1’, L2’, L3’		M10	M10	M10	M10	M10
PE connection		M8	M8	M8	M8	M10
Degree of protection		IP00	IP00	IP00	IP00	IP00
Dimensions Width Height Depth	 mm mm mm	 360 240 116	 360 240 116	 360 240 116	 360 240 116	 400 265 140
Weight	kg	12,3	12,3	12,3	12,3	19,0

3.8 Line reactors

3.8.1 Description

The line reactors limit low-frequency line harmonics and reduce the load on the rectifiers in the Power Modules. They are used to smooth voltage spikes (line supply faults) or to bridge voltage dips/interruptions when commutating. This why we recommend line reactors be used in conjunction with PM240-2, PM340, and Chassis Power Modules.

The line reactors for the PM340 in frame sizes FSA to FSE are designed as sub-chassis components.

3.8.2 Safety instructions for line reactors

⚠ WARNING

Danger to life if the fundamental safety instructions and residual risks are not observed

The non-observance of the fundamental safety instructions and residual risks stated in Chapter 1 can result in accidents with severe injuries or death.

- Observe the fundamental safety instructions.
- Consider the residual risks for the risk evaluation.

⚠ DANGER

Danger to life due to electric shock in the event of missing touch protection

Death or serious injury can result when live parts are touched.

- For the line reactors, use touch protection according to IPXXA or corresponding to the local installation regulations.

⚠ WARNING

Danger of fire through overheating for insufficient ventilation clearances

Insufficient ventilation clearances can result in overheating with danger to persons as a result of smoke and fire. Further, increased failures can occur and the service life of components shortened.

- Maintain 100 mm ventilation clearances above and below the component.

⚠ CAUTION

Risk of burns resulting from high surface temperatures of the line reactors

The surface temperature of the line reactors may exceed 80° C. Contact with the surface will cause you to suffer severe burn injuries.

- Mount the line reactor so that it cannot be touched. If this is not possible, at the dangerous locations, attach an appropriate warning note that is clearly visible and easy to understand.

NOTICE

Damage to the system due to impermissible line reactors

An impermissible line reactor may cause damage to the system and any further loads operated on the same power network.

- Only use line reactors that SIEMENS has released for SINAMICS.

NOTICE

Line reactor damage due to interchanged connections

Interchanging the input and output connections will damage the line reactor.

- Connect the incoming line cable at 1L1, 1L2, 1L3 or 1U1, 1V1, 1W1.
- Connect the outgoing cable to the load at 2L1, 2L2, 2L3 or 1U2, 1V2, 1W2.

Note

Malfunctions through magnetic fields

Reactors produce magnetic fields that can disturb or damage components and cables.

- Arrange the components and cables at a suitable distance (at least 200 mm) or shield the magnetic fields appropriately.

Note

Connection cables

Keep the connecting cables to the Power Module short (max. 5 m.)

Use shielded connection cables.

3.8.3 Dimension drawings

Blocksize line reactors for PM240-2

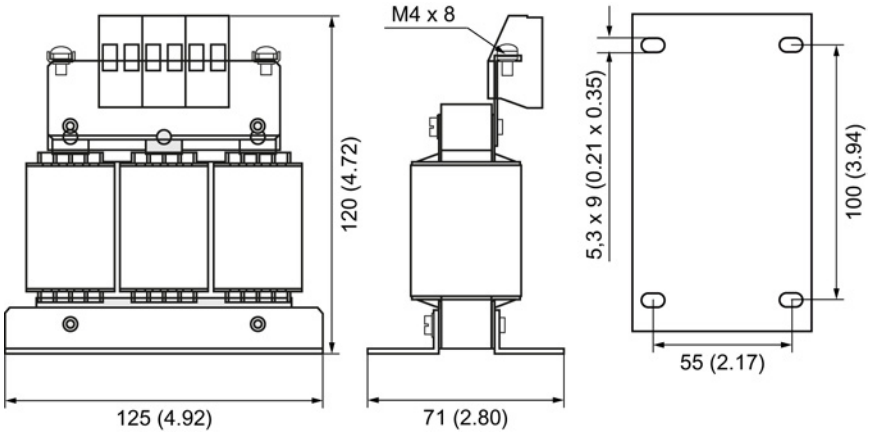

Figure 3-9 Dimensional drawing of line reactors, PM240-2 frame size FSA, 0.55 … 1.1 kW, all dimensions in mm and (inch)

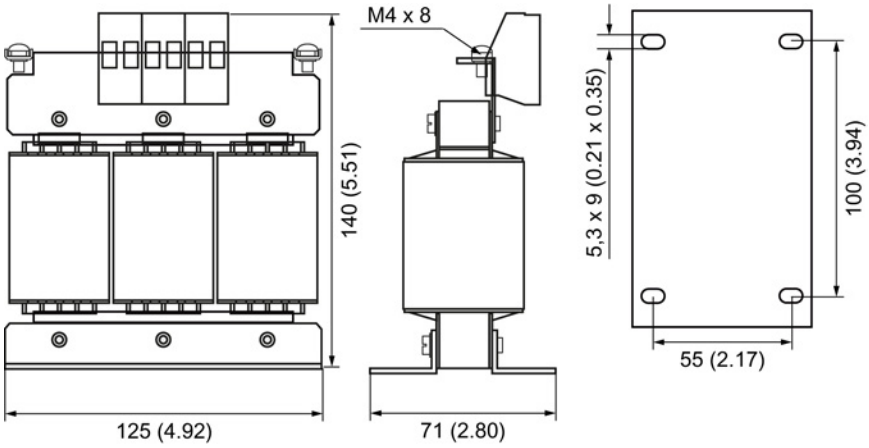

Figure 3-10 Dimensional drawing of line reactors, PM240-2 frame size FSA, 1.5 … 4.0 kW, all dimensions in mm and (inch)

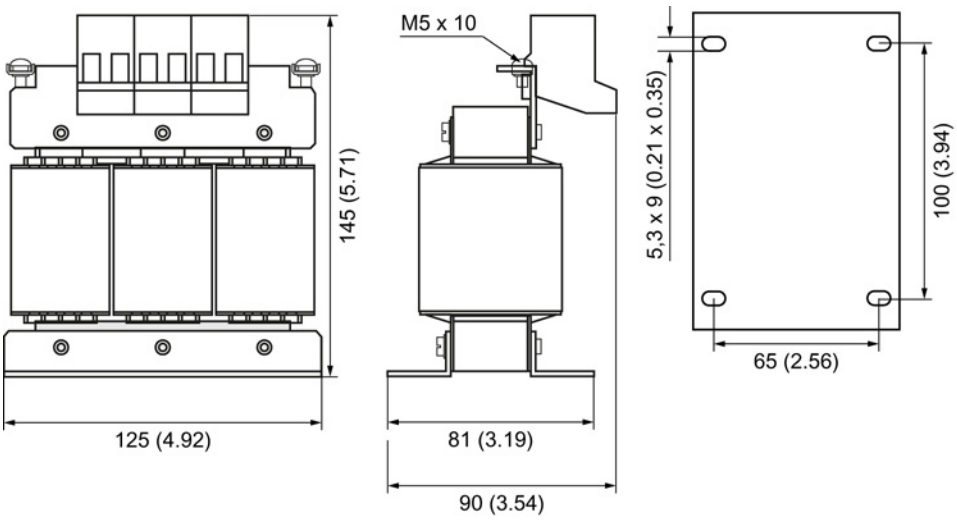

Figure 3-11 Dimensional drawing of line reactors, PM240-2, frame size FSB, 4.0 … 7.5 kW, all dimensions in mm and (inch)

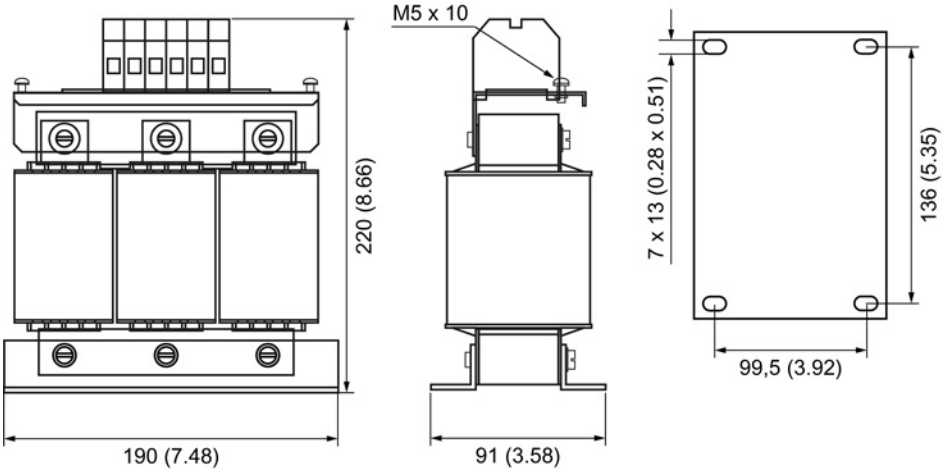

Figure 3-12 Dimensional drawing of line reactors, PM240-2, frame size FSC, 11 … 15 kW, all dimensions in mm and (inch)

Blocksize line reactors for PM340

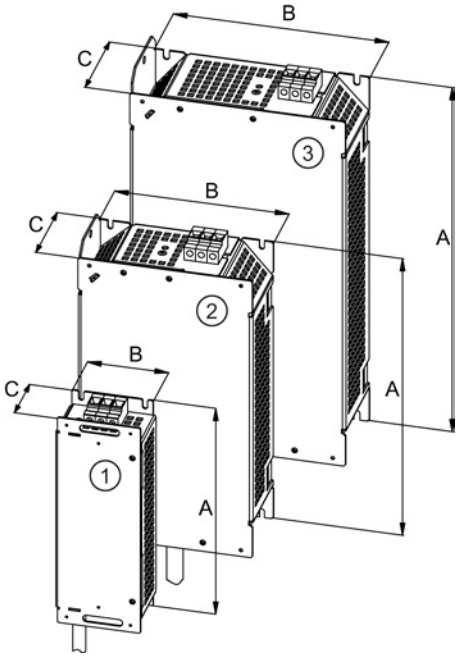

① Frame size FSA
② Frame size FSB
③ Frame size FSC

Figure 3-13 Dimension drawing of line reactors, PM340 frame sizes FSA, FSB, FSC

Table 3- 7 Dimensions of line reactors, PM340 frame size FSA, all data in mm (inches)

Line reactor 6SE6400-	3CC00-4AB3	3CC01-0AB3	3CC00-2AD3	3CC00-4AD3	3CC00-6AD3
Frame size	FSA				
A	200 (7.87)				
B	75 (2.95)				
C	50 (1.96)				

Table 3- 8 Dimensions of line reactors, PM 340 frame sizes FSB and FSC, all data in mm (inches)

Line reactor 6SL3203-	0CD21-0AA0	0CD21-4AA0	0CD22-2AA0	0CD23-5AA0
Frame size	FSB		FSC	
A	270 (10.62)		336 (13.22)	336 (13.22)
B	153 (6.02)		189 (7.44)	189 (7.44)
C	70 (2.75)		50 (1.96)	80 (3.14)

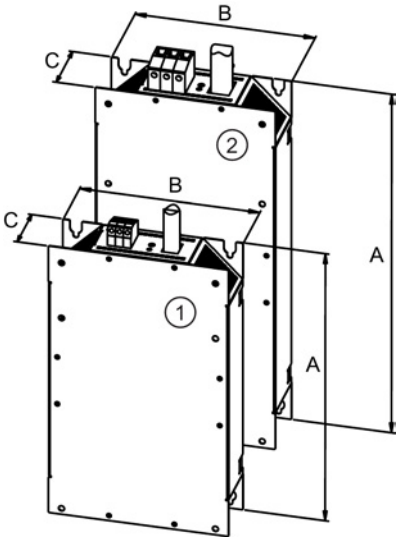

① Frame size FSD
② Frame size FSE

Figure 3-14 Dimension drawing of line reactors, PM340 frame sizes FSD, FSE

Table 3- 9 Dimensions of line reactors, PM340 frame sizes FSD and FSE, all data in mm (inches)

Line reactor 6SL3203-	0CJ24-5AA0	0CD25-3AA0	0CJ28-6AA0
Frame size	FSD		FSE
A	455 (17.91)		577 (22.71)
B	275 (10.82)		275 (10.82)
C	83,5 (3.28)		93,5 (3.68)

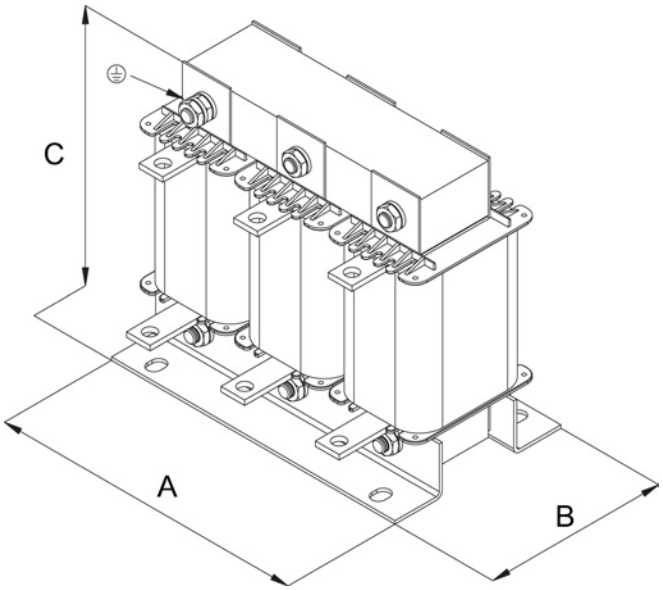

Figure 3-15 Dimension drawing of line reactors, PM340 frame size FSF

Table 3- 10 Dimensions of line reactors, PM340 frame size FSF, all data in mm (inches)

Line reactor 6SE6400-	3CC11-2FD0	3CC11-7FD0
Frame size	FSF	
A	240 (9.44)	
B	141 (5.55)	
C	228 (8.97)	

Chassis line reactors

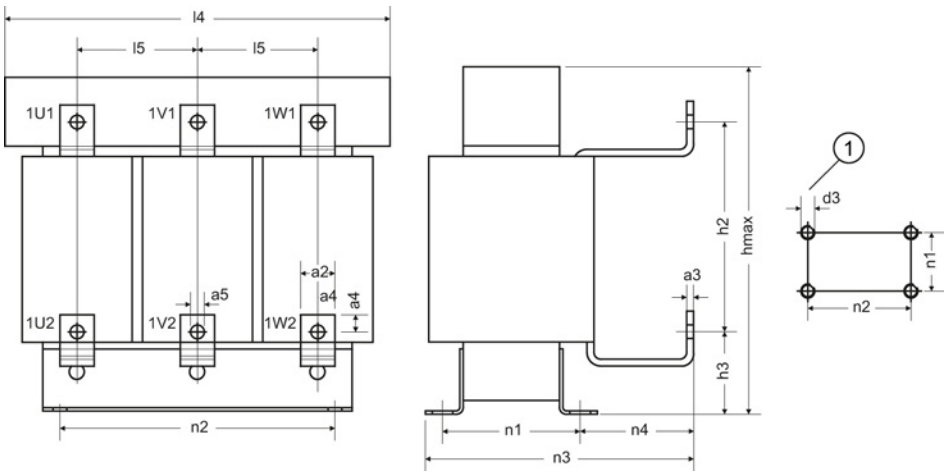

① Mounting hole

Figure 3-16 Dimension drawing, line reactors

Table 3- 11 Dimensions of the line reactors, all data in mm (inches)

6SL3000-	0CE32-3AA0	0CE32-8AA0	0CE33-3AA0	0CE35-1AA0
a2	25 (0.98)	25 (0.98)	25 (0.98)	30 (1.18)
a3	5 (0.19)	5 (0.19)	5 (0.19)	6 (0.23)
a4	12,5 (0.49)	12,5 (0.49)	12,5 (0.49)	15 (0.59)
a5	11 (0.43)	11 (0.43)	11 (0.43)	14 (0.55)
l4	270 (10.62)	270 (10.62)	270 (10.62)	300 (11.81)
l5	88 (3.46)	88 (3.46)	88 (3.46)	100 (3.93)
hmax	248 (9.76)	248 (9.76)	248 (9.76)	269 (10.59)
h2	150 (5.90)	150 (5.90)	150 (5.90)	180 (7.08)
h3	60 (2.36)	60 (2.36)	60 (2.36)	60 (2.36)
n1 [1)]	101 (3.97)	101 (3.97)	101 (3.97)	118 (4.64)
n2[1)]	200 (7.87)	200 (7.87)	200 (7.87)	224 (8.81)
n3	200 (7.87)	200 (7.87)	200 (7.87)	212,5 (8.36)
n3	84,5 (3.32)	84,5 (3.32)	84,5 (3.32)	81 (3.19)
d3	M8	M8	M8	M8

[1)] Lengths n1 and n2 correspond to the distance between holes.

3.8.4 Mounting

Blocksize line reactors for PM240-2

The line reactors for Power Modules PM240-2 of frame sizes FSA to FSC are designed for installation in a cabinet. The line reactor is installed on the mounting surface next to the Power Module. The line reactor is connected to the line supply through terminals.

Table 3- 12 Connecting the line reactor for the PM240-2 on the mounting surface

Frame size	Fastening	Tightening torque
FSA	4 x M5 screws 4 x M5 nuts 4 x M5 washers	6 Nm
FSB		
FSC	4 x M6 screws 4 x M6 nuts 4 x M6 washers	10 Nm

Blocksize line reactors for PM340

The line reactors for PM340 Power Modules in frame sizes FSA to FSE are designed as base components. The line reactor is fastened to the mounting surface and the Power Module is mounted on the line reactor in a space-saving fashion. The cables to the Power Modules are already connected at the line reactor. The line reactor is connected to the line supply through terminals.

When mounted, the power supply terminals are at the top on frame sizes FSA to FSC, and at the bottom on frame sizes FSD and FSE.

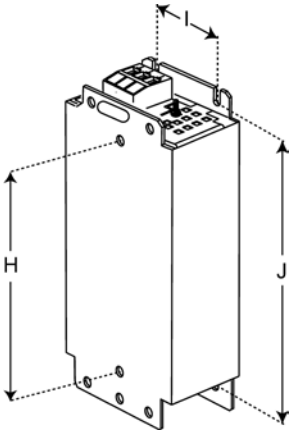

Figure 3-17 Mounting dimensions of line reactor PM340, frame size FSA

Table 3- 13 Mounting dimensions of line reactor PM340, frame size FSA, all data in mm and (inches)

Line reactor 6SE6400-	3CC00-4AB3	3CC01-0AB3	3CC00-2AD3	3CC00-4AD3	3CC00-6AD3
Frame size	FSA				
H	160 (6.29)				
I	56 (2.20)				
J	187 (7.36)				
Fixing screws	M4/1.1 Nm				

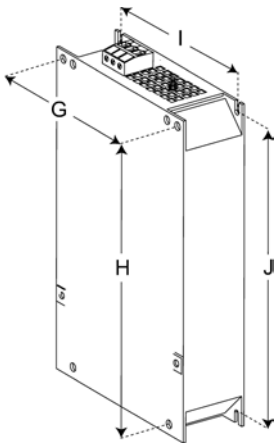

Figure 3-18 Mounting dimensions of line reactor PM340, frame sizes FSB and FSC

Table 3- 14 Mounting dimensions for line reactors PM340, frame sizes FSB and FSC, all data in mm and (inches)

Line reactor 6SL3203-	0CD21-0AA0	0CD21-4AA0	0CD22-2AA0	0CD22-2AA0	0CD23-5AA0
Frame size	FSB			FSC	
G	133 (5.24)			174 (6.85)	
H	258 (10.16)			204 (8.03)	
I	133 (5.24)			156 (6.14)	
J	258 (10.16)			232 (9.13)	
Fixing screws	M4/1.5 Nm			M5/2.25 Nm	

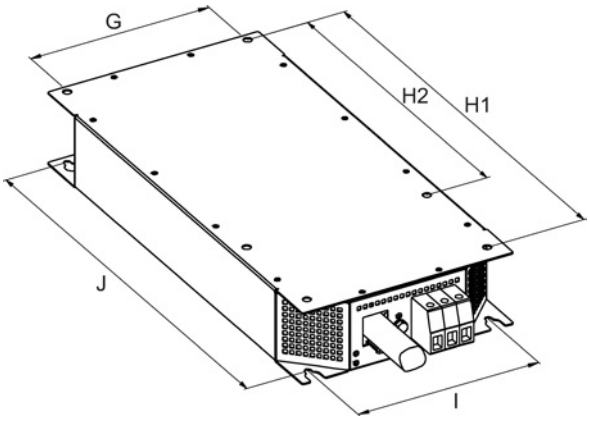

Figure 3-19 Mounting dimensions of line reactor PM340, frame sizes FSD and FSE

Table 3- 15 Mounting dimensions for line reactors PM340, frame sizes FSD and FSE, all data in mm and (inches)

Line reactor 6SL3203-	0CD25-3AA0	0CJ24-5AA0	0CJ28-6AA0
Frame size	FSD		FSE
G	235 (9.25)	235 (9.25)	235 (9.25)
H1	325 (12.79)	325 (12.79)	405 (15.95)
H2	419 (16.50)	419 (16.50)	541 (21.30)
I	235 (9.25)	235 (9.25)	235 (9.25)
J	421 (16.57)	421 (16.57)	544 (21.42)
Fixing screws	4 x M8/13 Nm		4 x M8/13 Nm

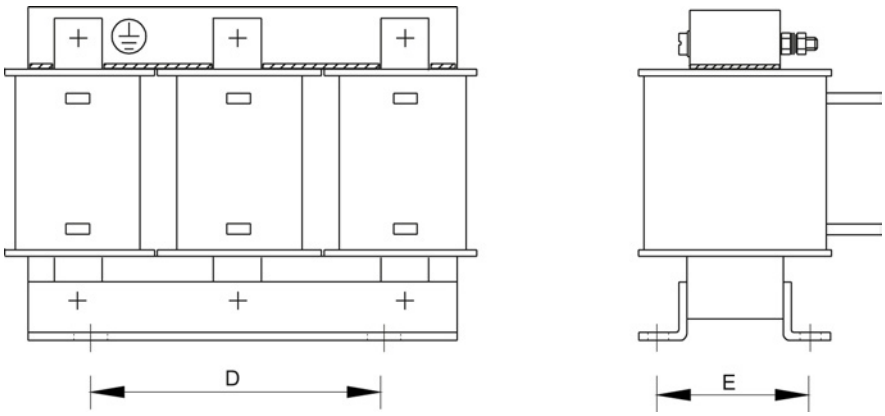

Figure 3-20 Mounting dimensions of line reactor PM340, frame size FSF

Table 3- 16 Mounting dimensions of line reactor PM340, frame size FSF, all data in mm and (inches)

Line reactor 6SE6400-	3CC11-2FD0	3CC11-7FD0
Frame size	FSF	
D	185 (7.28)	
E	95 (3.74)	
Fixing screws	4 x M8/13 Nm	

Mounting examples

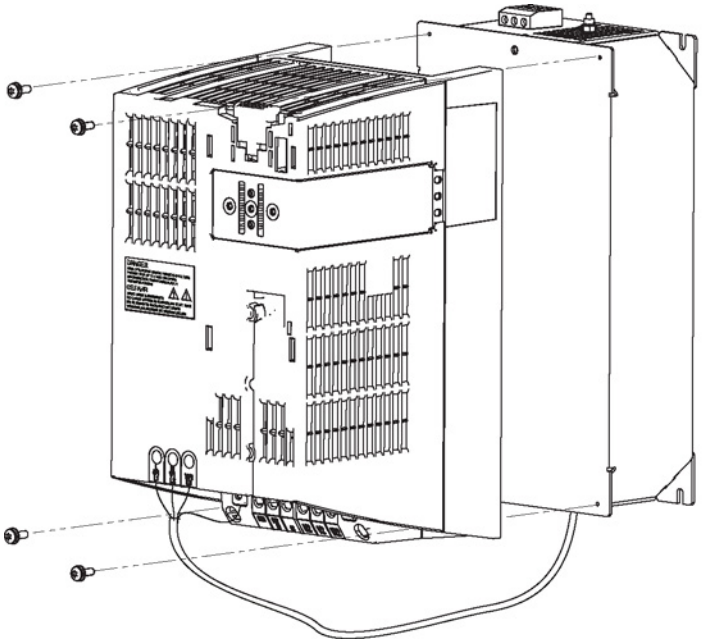

Figure 3-21 Mounting the PM340 with a line reactor, using frame size FSB as an example

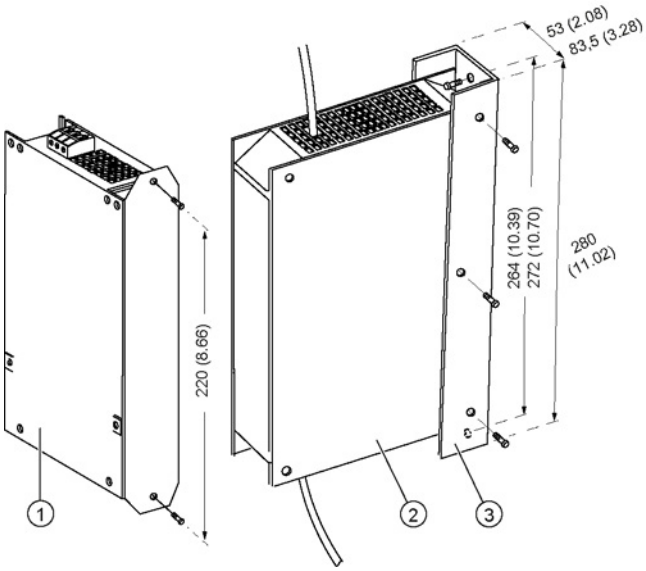

① Frame size FSB
② Frame size FSC
③ Lateral mounting bracket

Figure 3-22 Lateral mounting of line reactors for frame sizes FSB and FSC

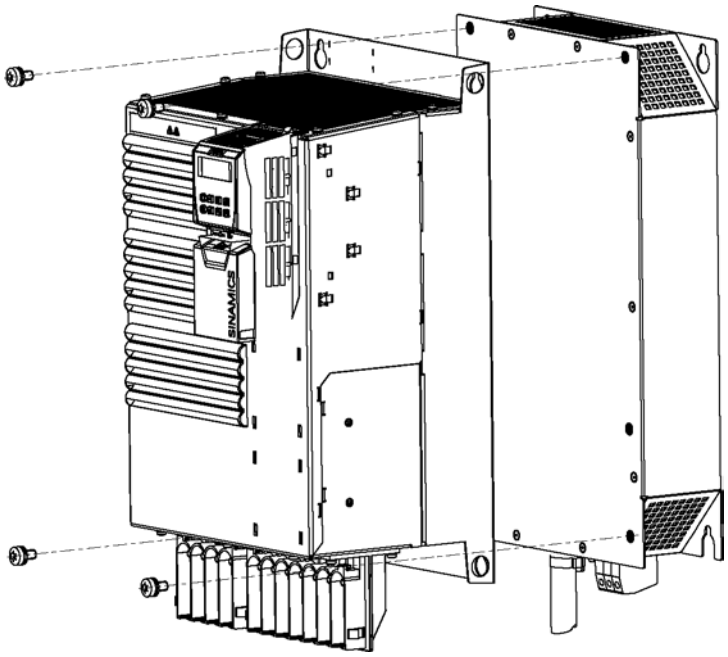

Figure 3-23 Mounting the PM340 with a line reactor, using frame size FSD as an example

Chassis line reactors

The line reactors for Power Modules, frame sizes FSF, FX, and GX are, as a result of their weight and their size, mounted separately.

3.8.5 Electrical Connection

Line/load connection

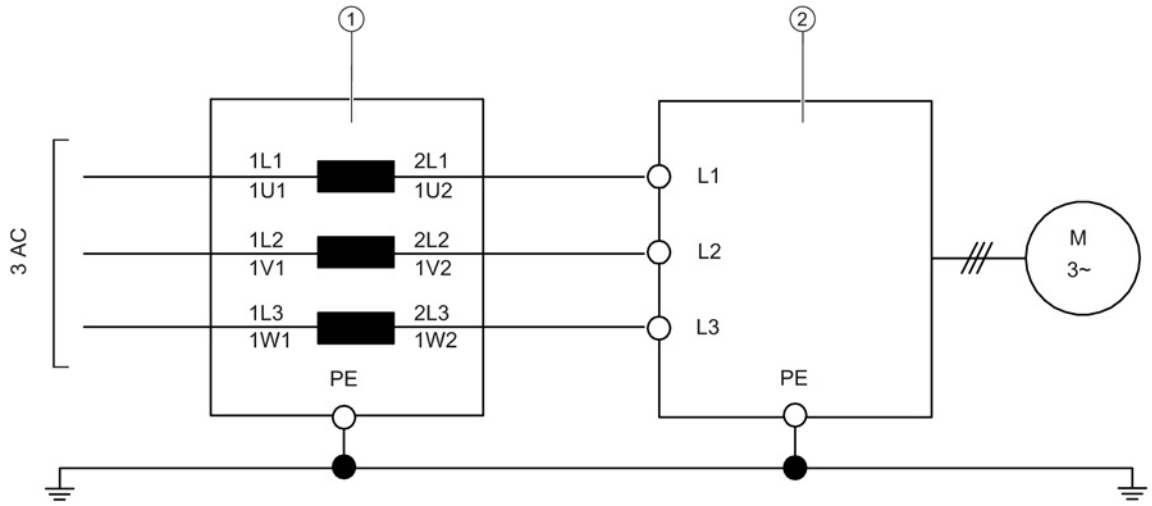

① Line reactor
② Power Module

Figure 3-24 Power Module with line filter

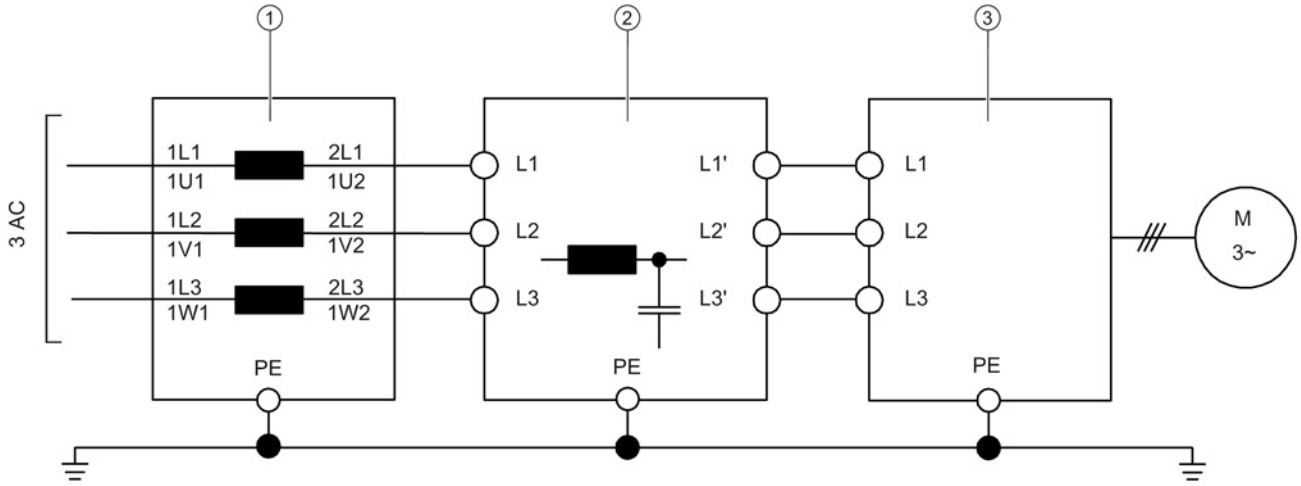

① Line reactor
② Line filter
③ Power Module

Figure 3-25 Power Module with line reactor and line filter

3.8.6 Technical data

3.8.6.1 Blocksize line reactors

Table 3- 17 Technical data of Blocksize line reactors PM240-2

Order No. 6SL3203-		0CE13-2AA0	0CE21-0AA0	0CE21-8AA0	0CE23-8AA0
Frame size		FSA	FSA	FSB	FSC
Matching Power Modules[1]		Line voltage 1-phase 200 VAC -10% to 240 VAC +10%:			
		6SL3210- 1PB13-0xL0 1PB13-8xL0	6SL3210- 1PB15-5xL0 1PB17-4xL0 1PB21-0xL0 6SL3211- 1PB21-0xL0	6SL3210- 1PB21-4xL0 1PB21-8xL0 6SL3211- 1PB21-8xL0	6SL3210- 1PC22-2xL0 1PC22-8xL0 6SL3211- 1PC22-2xL0
		Line voltage 3-phase 380 VAC -10% to 480 VAC +10%:			
		6SL3210- 1PE11-8xL1 1PE12-3xL1 1PE13-2xL1	6SL3210- 1PE14-3xL1 1PE16-1xL1 1PE18-0xL1 6SL3211- 1PE18-0xL1	6SL3210- 1PE21-1xL0 1PE21-4xL0 1PE21-8xL0 6SL3211- 1PE21-8xL0	6SL3210- 1PE22-7xL0 1PE23-3xL0 6SL3211- 1PE23-3xL0
Inductance	mH	2,5	1,0	0,5	0,3
Unit rating of the Power Module	kW	0,55 … 1,1	1,5 … 4,0	4,0 … 7,5	11 … 15
Rated current	A	4,0	11,3	22,3	47,0
Power loss 50/60 Hz	W	23 / 25,3	36 / 39,6	53 / 58,3	88 / 96,8
Line/load connection 1L1, 1L2,1L3 2L1, 2L2, 2L3		Max. connectable cross-section: 2.5 mm^2 Tightening torque: 0.6 … 0.8 Nm	Max. connectable cross-section: 2.5 mm^2 Tightening torque: 0.6 … 0.8 Nm	Max. connectable cross-section: 6 mm^2 Tightening torque: 1.5 … 1.8 Nm	Max. connectable cross-section: 16 mm^2 Tightening torque: 2.0 … 4.0 Nm
PE connection		Type: M4 bolts Tightening torque: 3 Nm	Type: M4 bolts Tightening torque: 3 Nm	Type: M5 bolts Tightening torque: 5 Nm	Type: M5 bolts Tightening torque: 5 Nm
Degree of protection		IP20	IP20	IP20	IP20
Weight	kg	1,1	2,1	2,95	2,95

[1] x = A: Power Module with integrated line filter, x = U: Power Module without integrated line filter

Table 3- 18 Technical data, Blocksize line reactors PM340, frame size FSA

Line voltage 1-phase 200 VAC -10% to 240 VAC +10%			
Order No. 6SE6400-		**3CC00-4AB3**	**3CC01-0AB3**
Suitable for Power Module 6SL3210-		1SB11-0xxx 1SB12-3xxx	1SB14-0xxx
Rated current	A	3,4	8,1
Power loss 50/60 Hz	W	12,5 / 15	11,5 / 14,5
Line supply connection L1, N		6 mm screw terminals[2]	6 mm screw terminals[2]
Load connection L1, N		Cable 3 x 1.5 mm^2 (including PE) length approx. 0.38 m	Cable 3 x 1.5 mm^2 (including PE) length approx. 0.38 m
PE connection		M5 stud	M5 stud
Degree of protection		IP20 or IPXXB	IP20 or IPXXB
Weight	kg	1,3	1,3

Table 3- 19 Technical data, Blocksize line reactors PM340, frame size FSA

Line voltage 3-phase 380 VAC -10% to 480 VAC +10%				
Order No. 6SE6400-		**3CC00-2AD3**	**3CC00-4AD3**	**3CC00-6AD3**
Suitable for Power Module 6SL3210-		1SE11-3UA0 1SE11-7UA0	1SE12-2UA0 1SE13-1UA0	1SE14-1UA0
Rated current	A	1,9	3,5	4,8
Power loss 50/60 Hz	W	6 / 7	12,5 / 15	7,5 / 9
Line supply connection U1, V1, W1		Screw-type terminal 6 mm^2	Screw-type terminal 6 mm^2	Screw-type terminal 6 mm^2
Load connection 1U2, 1V2, 1W2		Cable 4 x 1.5 mm^2 Length approx. 0.38 m	Cable 4 x 1.5 mm^2 Length approx. 0.38 m	Cable 4 x 1.5 mm^2 Length approx. 0.38 m
PE connection		At the housing with M5 stud	At the housing with M5 stud	At the housing with M5 stud
Degree of protection		IP20 or IPXXB	IP20 or IPXXB	IP20 or IPXXB
Weight	kg	1,2	1,3	1,3

Table 3- 20 Technical data, Blocksize line reactors PM340, frame sizes FSB and FSC

Line voltage 3-phase 380 VAC -10% to 480 VAC +10%					
Frame size		**FSB**		**FSC**	
Order No. 6SL3203-		**0CD21-0AA0**	**0CD21-4AA0**	**0CD22-2AA0**	**0CD23-5AA0**
Suitable for Power Module 6SL3210-		1SE16-0xxx 1SE17-7xxx	1SE21-0xxx	1SE21-8xxx 1SE22-5xxx	1SE23-2xxx
Rated current	A	9	11,6	25	31,3
Power loss 50/60 Hz	W	9 / 11	27 / 32	98 / 118	37 / 44
Line supply connection U1, V1, W1		Screw-type terminal 6 mm^2	Screw-type terminal 6 mm^2	Screw-type terminal 6 mm^2	Screw-type terminal 6 mm^2
Load connection 1U2, 1V2, 1W2		Cable 4 x 1.5 mm^2 Length approx. 0.46 m	Cable 4 x 1.5 mm^2 Length approx. 0.46 m	Cable 4 x 2.5 mm^2 Length approx. 0.49 m	Cable 4 x 2.5 mm^2 Length approx. 0.49 m
PE connection		At the housing with M5 stud	At the housing with M5 stud	At the housing with M5 stud	At the housing with M5 stud
Degree of protection		IP20 or IPXXB	IP20 or IPXXB	IP20 or IPXXB	IP20 or IPXXB
Weight	kg	3,4	3,4	6,3	6,4

Table 3- 21 Technical data, Blocksize line reactors PM340, frame sizes FSD, FSE, and FSF

Line voltage 3-phase 380 VAC -10% to 480 VAC +10%						
Frame size		FSD		FSE	FSF	
Order number		6SL3203- 0CJ24-5AA0	6SL3203- 0CD25-3AA0	6SL3203- 0CJ28-6AA0	6SE6400- 3CC11-2FD0	6SE6400- 3CC11-7FD0
Suitable for Power Module 6SL3210- 6SL3215-		 1SE23-8xxx 1SE24-5xxx 1SE23-8UAx	 1SE26-0xxx 1SE26-0UAx	 1SE27-5xxx 1SE31-0xxx 1SE27-5UAx 1SE31-0UAx	 1SE31-1xxx 1SE31-5xxx 1SE31-1UAx	 1SE31-8xxx 1SE31-8UAx
Rated current	A	54	71	105	178	225
Power loss 50/60 Hz	W	90 / 115	90 / 115	170 / 215	280 / 360	280 / 360
Line supply connection U1, V1, W1		Screw-type terminal 16 mm²	Screw-type terminal 16 mm²	Screw-type terminal 50 mm²	Flat connector for M10 cable lug	Flat connector for M10 cable lug
Load connection 1U2, 1V2, 1W2		Cable 4 x 16 mm² Length approx. 0.70 m	Cable 4 x 16 mm² Length approx. 0.70 m	Cable 4 x 35 mm² Length approx. 0.70 m	Flat connector for M10 cable lug	Flat connector for M10 cable lug
PE connection		At the housing with M8 screw	At the housing with M8 screw	At the housing with M8 screw	At the housing with M8 bolt	At the housing with M8 bolt
Degree of protection		IP20 or IPXXB	IP20 or IPXXB	IP20 or IPXXB	IP00	IP00
Weight	kg	13	13	19	25	25

3.8.6.2 Chassis line reactors

Table 3- 22 Technical data, Chassis line reactors

Order number	6SL3000-	0CE32-3AA0	0CE32-8AA0	0CE33-3AA0	0CE35-1AA0	0CE35-1AA0
Suitable for Power Module	6SL3310-	1TE32-1AAx	1TE32-6AAx	1TE33-1AAx	1TE33-8AAx	1TE35-0AAx
Rated current of the Power Module	A	210	260	310	380	490
Rated voltage	V	380 V 3 AC - 10 % … 480 V 3 AC + 10 % (-15 % < 1 min), 47 … 63 Hz				
I_{thmax}	A	224	278	331	508	508
Power loss	kW	0,274	0,247	0,267	0,365	0,365
Line/load connection 1U1, 1V1, 1W1, 1U2, 1V2, 1W2		M10 connecting lugs	M10 connecting lugs	M10 connecting lugs	M12 connecting lugs	M12 connecting lugs
PE connection		M6 screw	M6 screw	M6 screw	M6 screw	M6 screw
Degree of protection		IP00	IP00	IP00	IP00	IP00
Weight	kg	24,5	26	27,8	38	38

3.9 Line connection variants

3.9.1 Operation on different line system configurations

The Power Modules are designed for the following power distribution systems according to IEC 60364-1.

Note

Above an installation altitude of 2000 m, you must observe the notes in Section Derating as a function of the ambient temperature, pulse frequency, and installation altitude (Page 37).

TN line system

In a TN system, a point of the generator or the transformer is grounded, normally the neutral point. The housing of the consumer is also connected with the ground using this cable.

Neutral and protective conductors can be fed separately (N / PE) or together (PEN).

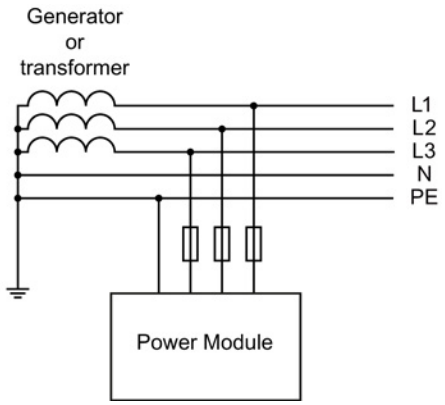

Figure 3-26 TN line system

- Power Modules without line filter can be operated on all TN line systems.
- Power Modules with integrated or external line filter can be operated only on TN line systems with grounded neutral point.

TT system

In a TT system, a point of the generator or the transformer is grounded, normally the neutral point. The housing of the consumer is connected with the ground using a separate cable.

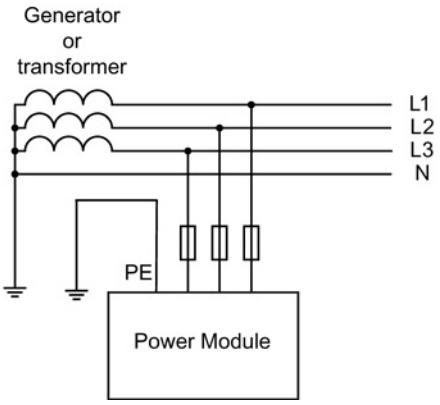

Figure 3-27 TT system

- Power Modules without line filter can be operated on all TT line systems.
- Power Modules with integrated or external line filter can be operated only on TT line systems with grounded neutral point.

IT system

In an IT system, the voltage network is either not connected with ground or connected only using a high-resistance impedance. The housing of the consumer is connected with the ground using a separate cable.

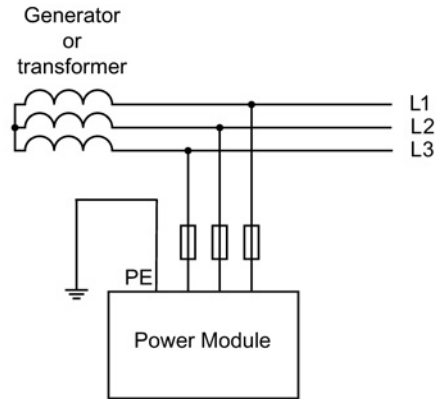

Figure 3-28 IT system

- Power Modules without line filter can be operated on all IT line systems.
- Power Modules with integrated or external line filter can be operated only on IT line systems.

NOTICE
Damage of the drive line-up when operating on an IT line system without motor reactor If the drive unit is operated without motor reactor on an IT line system, a ground fault on the motor side of the Power Modules can cause damage to the drive line-up or trigger the overcurrent protective equipment. • Always operate the Power Modules on IT line system with motor reactors.

3.9.2 Methods of line connection

A distinction is made between the following line connection types:

- Line connection components to be directly connected to the line supply
- Operation of the line connection components via an autotransformer
- Operation of the line connection components via an isolating transformer

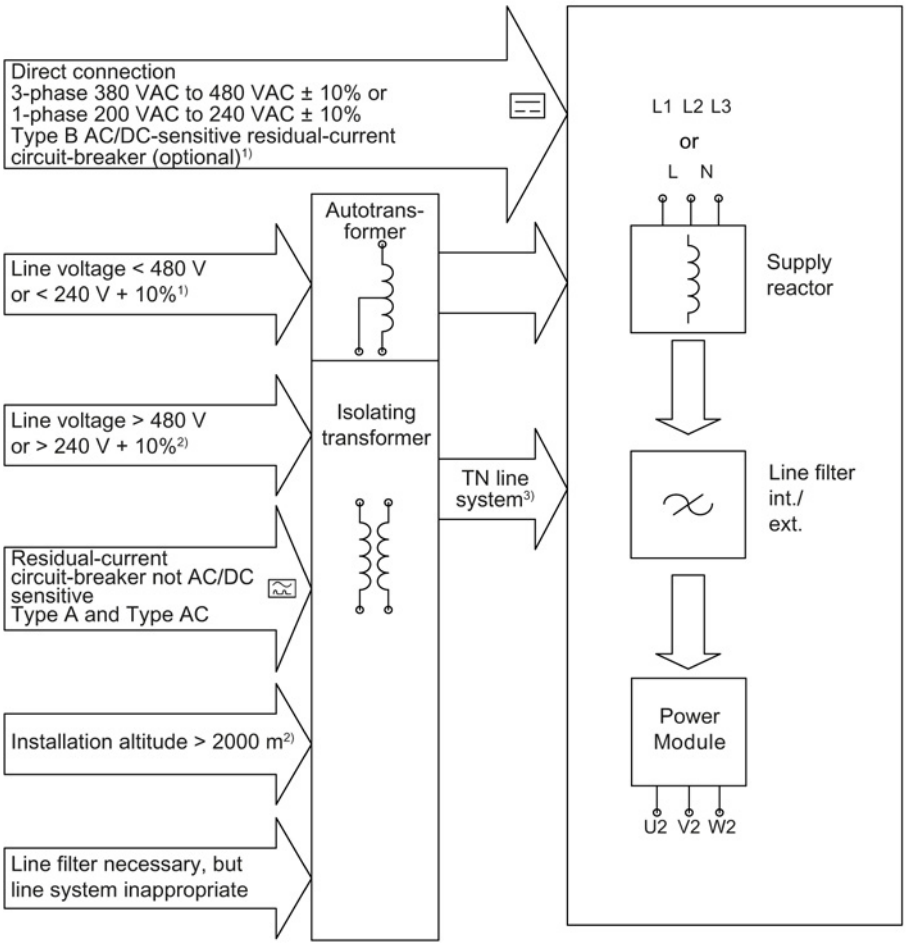

1) TN or TT systems with grounded star point or IT systems with monitoring
2) Any line supply system
3) With grounded neutral point

Figure 3-29 Overview of line connection variants

⚠ DANGER

Danger to life due to electric shock if isolating transformer is omitted

To implement safe electrical separation, an isolating transformer must be used with high voltages.

- Install an isolating transformer for voltages of > 3-phase 480 VAC +10% or 240 VAC +10%.

Note

Line connection of motors

In combination with the drive system, the motors are generally approved for operation on TN and TT systems with grounded neutral point and on IT systems.

In use on IT systems, the occurrence of a first fault between a live part and ground must be signaled by a monitoring device. The first fault must be removed as quickly as possible to minimize temporary overload of the motor insulation.

In all other systems, except TN and TT systems with grounded neutral point and IT systems, such as systems with a grounded line conductor, an isolating transformer with grounded neutral point (secondary side) must be connected between the supply and the drive system in order to protect the motor insulation from continuous excessive stress.

3.9.3 Operation of the line connection components on the supply line

The SINAMICS S drive system is designed to be directly connected to TN and TT systems with a grounded neutral point as well as to IT systems without line filter with rated voltages from 3-phase 380 VAC to 480 VAC and 1-phase 200 VAC to 240 VAC.

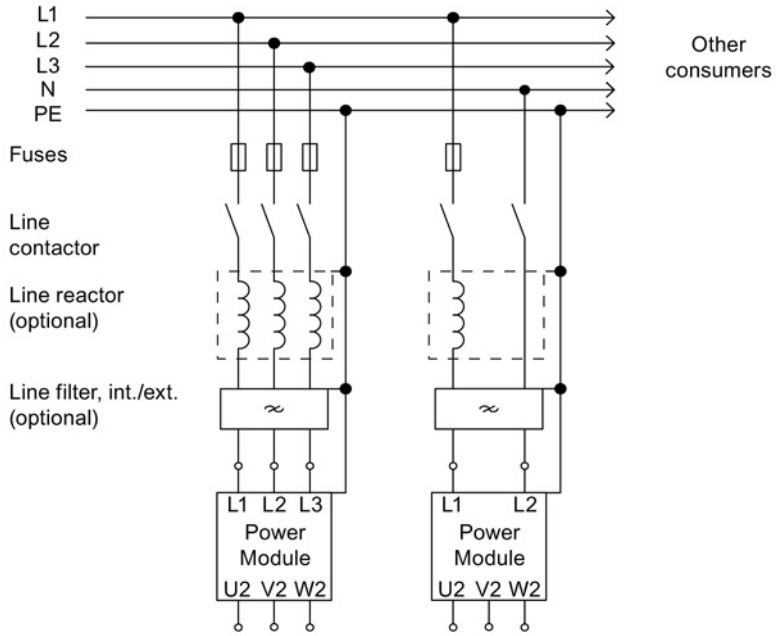

Figure 3-30 Direct operation on the line supply

Operation of single-phase units on the Single Phase Grounded Midpoint line system configuration

The line connection depicted below applies to the operation of single-phase units (1-ph. 230 VAC) on the Single Phase Grounded Midpoint line system configuration commonly used in the USA:

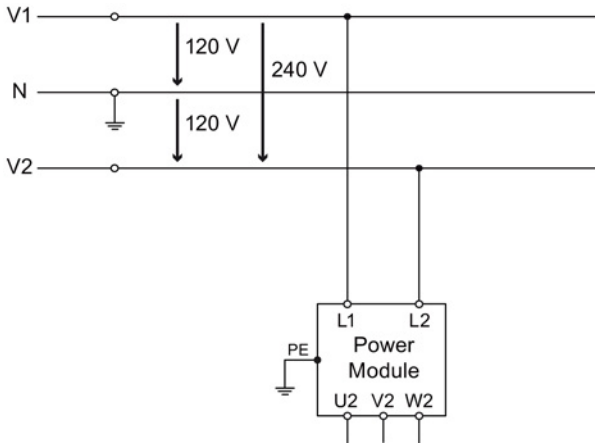

Figure 3-31 Direct operation on single phase grounded midpoint line system configurations

3.9.4 Operation of the line connection components via an autotransformer

An autotransformer can be used to adapt the voltage in the range up to 3-phase 480 VAC +10% or 240 VAC +10%.

Application example:

- The motor insulation must be protected from excessive voltages.

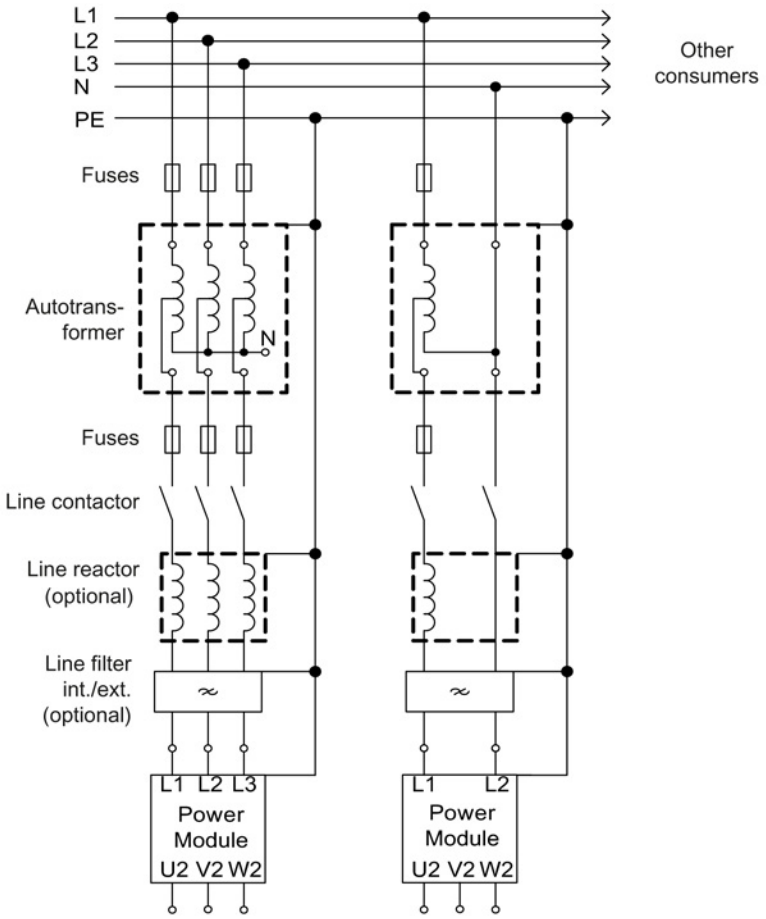

Figure 3-32 Auto-transformers

3.9.5 Operation of the line connection components via an isolating transformer

The isolating transformer converts the type of system grounding of the installation (e.g. IT system) to a TN system with grounded neutral point. Additional voltage adaptation to the permissible voltage tolerance range is possible.

An isolating transformer must be used in the following cases:

- The insulation of the Power Module and/or the motor is not adequate for the voltages that occur.
- There is no compatibility to an existing residual current device.
- The installation altitude is greater than 2000 m above sea level.
- A line filter should always be used for all systems that are not TN or TT systems with grounded neutral point.

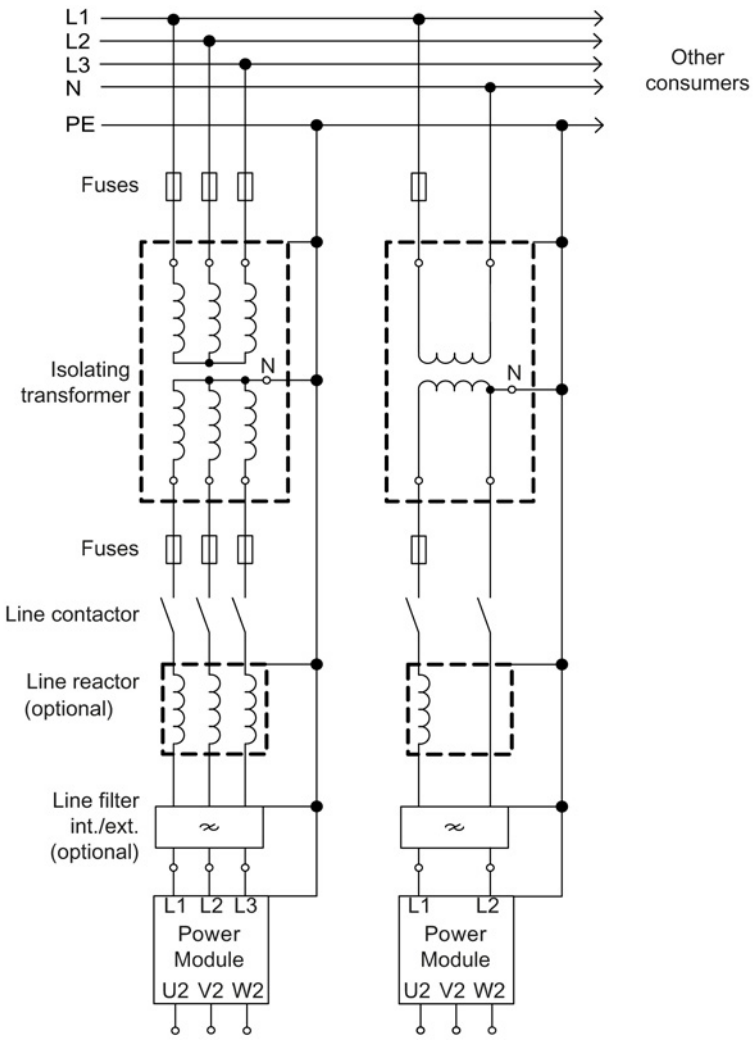

Figure 3-33 Isolating transformer

Power Modules

4

4.1 Safety instructions for Power Modules

⚠ WARNING

Danger to life if the fundamental safety instructions and residual risks are not observed

The non-observance of the fundamental safety instructions and residual risks stated in Chapter 1 can result in accidents with severe injuries or death.

- Observe the fundamental safety instructions.
- Consider the residual risks for the risk evaluation.

⚠ DANGER

Danger to life due to electric shock caused by residual charge of the DC-link capacitors

Due to the DC-link capacitors, a hazardous voltage is present in the DC link for up to five minutes after the power supply has been switched off.

Touching live components results in death or severe injury.

- Only carry out work on these components after this time has elapsed.
- Measure the voltage before starting work on the DCP and DCN DC-link terminals.

⚠ WARNING

Danger to life through a hazardous voltage when connecting an unsuitable power supply

Death or serious injury can result when live parts are touched in the event of a fault.

- Only use the intended supply voltage to operate the Power Modules.

⚠ WARNING

Danger to life due to electric shock caused by not covered terminals (for frame sizes FSD to FSF)

Contact with live terminals can cause death or severe injury.

- Before starting the connection work, ensure that the Power Module is de-energized.
- After connecting the supply and motor cables to the appropriate terminals, reattach the front covers in the closed position and latch them in.
- Only connect the Power Module to the supply voltage after these checks have been made.

⚠ WARNING

Danger to life caused by high discharge currents when the external protective conductor is interrupted

Drive components conduct high discharge currents via the protective conductor. When the protective conductor is interrupted, touching live components can result in electric shock, which can lead to death or serious injuries.

- Ensure that the external protective conductor complies with at least one of the following conditions:
  - It is laid protected against mechanical damage.[1)]
  - For an individual core, it has a cross-section of at least 10 mm² Cu.
  - As core of a multi-core cable, it has a cross-section of at least 2.5 mm² Cu.
  - It has a parallel, second protective conductor with the same cross-section.
  - It corresponds to the local regulations for equipment with increased leakage current.

  [1)] Cables routed in control cabinets or enclosed machine enclosures are considered to be adequately protected against mechanical damage.

NOTICE

Material damage caused by loose power connections

Insufficient tightening torques or vibration can result in faulty electrical connections. This can cause fire damage or functional faults.

- Tighten all power connections with the specified tightening torques, e.g. line supply connection, motor connection, DC-link connections.
- Check the tightening torques of all power connections at regular intervals and tighten them when required. This applies in particular after transport.

Note

Malfunctions on non-Siemens equipment caused by high-frequency faults in residential environments

In the 1st environment Category C2 according to EMC product standard IEC 61800-3 (residential, commercial and industrial sector), the device may cause high-frequency disturbance, which can result in malfunctions in other equipment.

- Have the installation and commissioning with appropriate radio interference suppression measures preformed by qualified personnel.

Note

Connection authorization

Power Modules have been designed for use in the industrial environment and generate current harmonics on the line side as a result of the rectifier circuit.

When connecting a machine with integrated Power Modules to the public low-voltage line supply, authorization is required in advance from the local power supply company (utility company) if

- the rated input current of the motor ≤ 16 A per conductor, and
- the rated input current of the motor does not comply with the requirements specified in EN 61000-3-2 regarding current harmonics.

Note

For a UL-approved system use UL-approved cables only.

4.2 Blocksize Power Modules (PM240-2)

4.2.1 Description

The Power Modules in Blocksize format are designed as follows:

- Line-side diode rectifier
- DC-link electrolytic capacitors with pre-charging circuit
- Output inverter
- Braking chopper for (external) braking resistor
- 24 VDC / 1 A power supply
- Gating unit, actual value acquisition
- Fan to cool the power semiconductors

The Power Modules cover the power range from 0.55 kW to 15 kW and are available in versions with and without a line filter.

The PM240-2 Power Modules are designed for installation in the cabinet and in the following cooling variants:

- Built-in unit with internal air cooling
- Push-through unit with external air cooling

Table 4- 1 Overview of PM240-2 Power Modules (selection)

Power Module frame size FSA, with and without an integrated line filter	Push Through Power Module frame size FSA, with and without an integrated line filter

Power Module frame size FSB, with and without integrated line filter	Push Through Power Module frame size FSB, with and without an integrated line filter
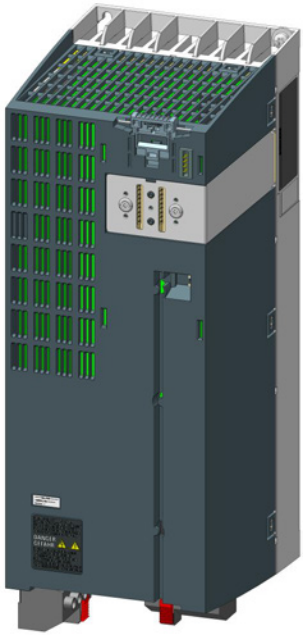	
Power Module frame size FSC, with and without integrated line filter	Push Through Power Module frame size FSC, with and without an integrated line filter

4.2.2 Safety information for 240-2 Power Modules

⚠ WARNING

Danger to life if the fundamental safety instructions and residual risks are not observed

The non-observance of the fundamental safety instructions and residual risks stated in Chapter 1 can result in accidents with severe injuries or death.

- Observe the fundamental safety instructions.
- Consider the residual risks for the risk evaluation.

⚠ WARNING

Danger of fire through overheating caused by insufficient ventilation and installation clearances

Insufficient ventilation and installation clearances result in overheating with danger to persons as a result of smoke and fire. Further, increased failures can occur and the service life of units/systems shortened.

- Always install the Power Modules vertical with the line and motor connections at the bottom.
- Ensure a 1 mm clearance between mounted components.
- Maintain the following ventilation clearances above and below the component:
  - Above: 80 mm (3.15 inches)
  - Below: 100 mm (3.93 inches)
- Do not install devices in this area that could obstruct the cooling airflow.
- Ensure that the cooling air flow of the Power Modules can flow unrestricted.

4.2.3 Interface description

4.2.3.1 Overview

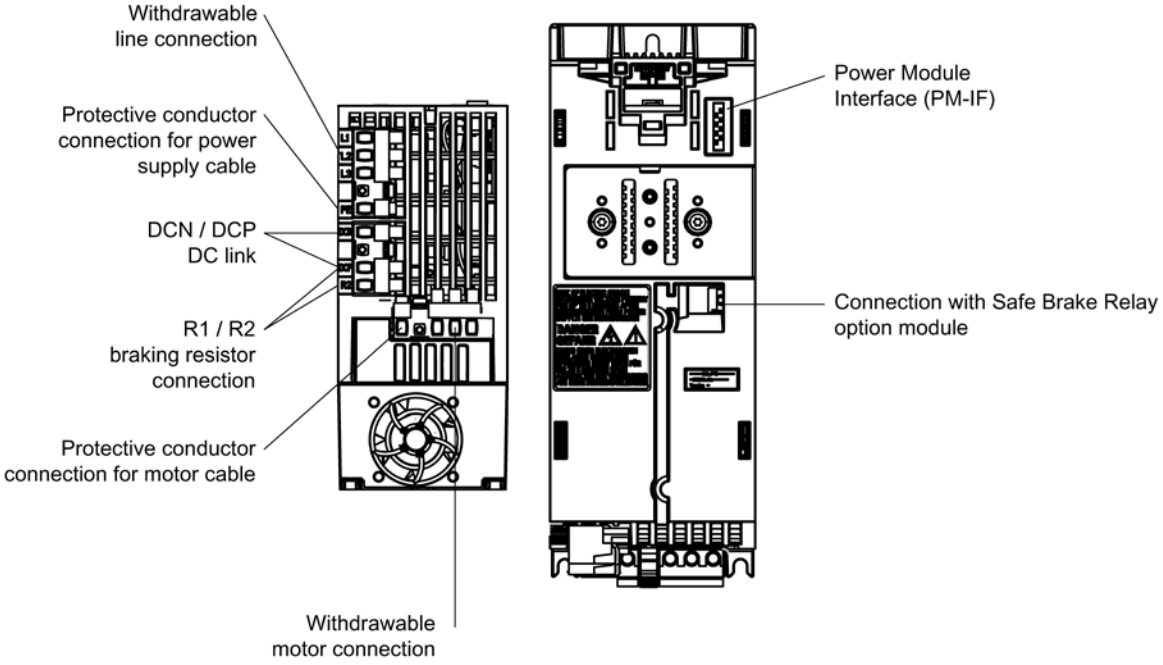

Figure 4-1 PM240-2, frame size FSA (view from below and front)

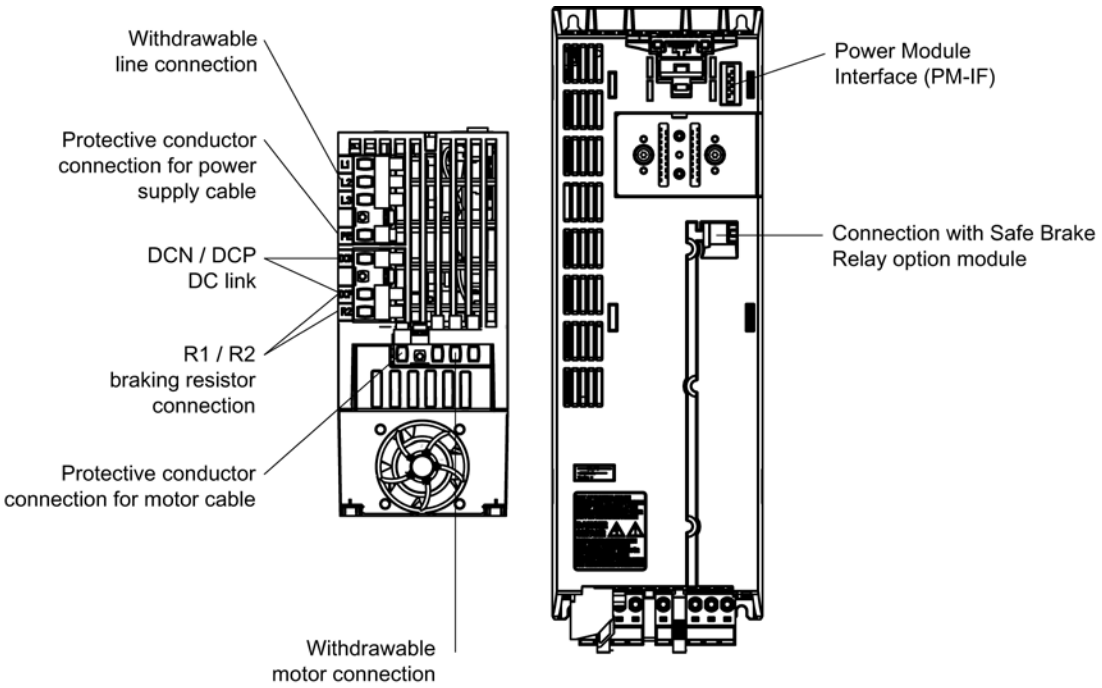

Figure 4-2 PM240-2, frame size FSB (view from below and front)

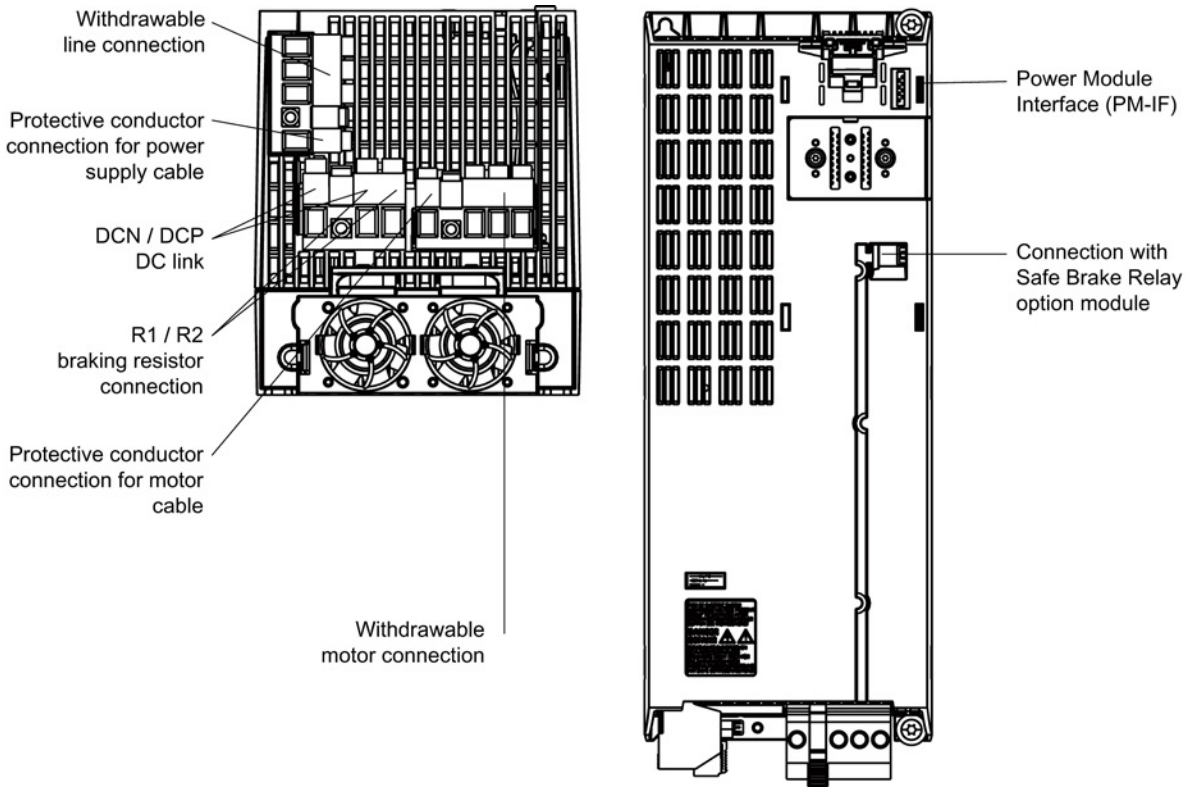

Figure 4-3 PM240-2, frame size FSB (view from below and front)

4.2.3.2 Connection example

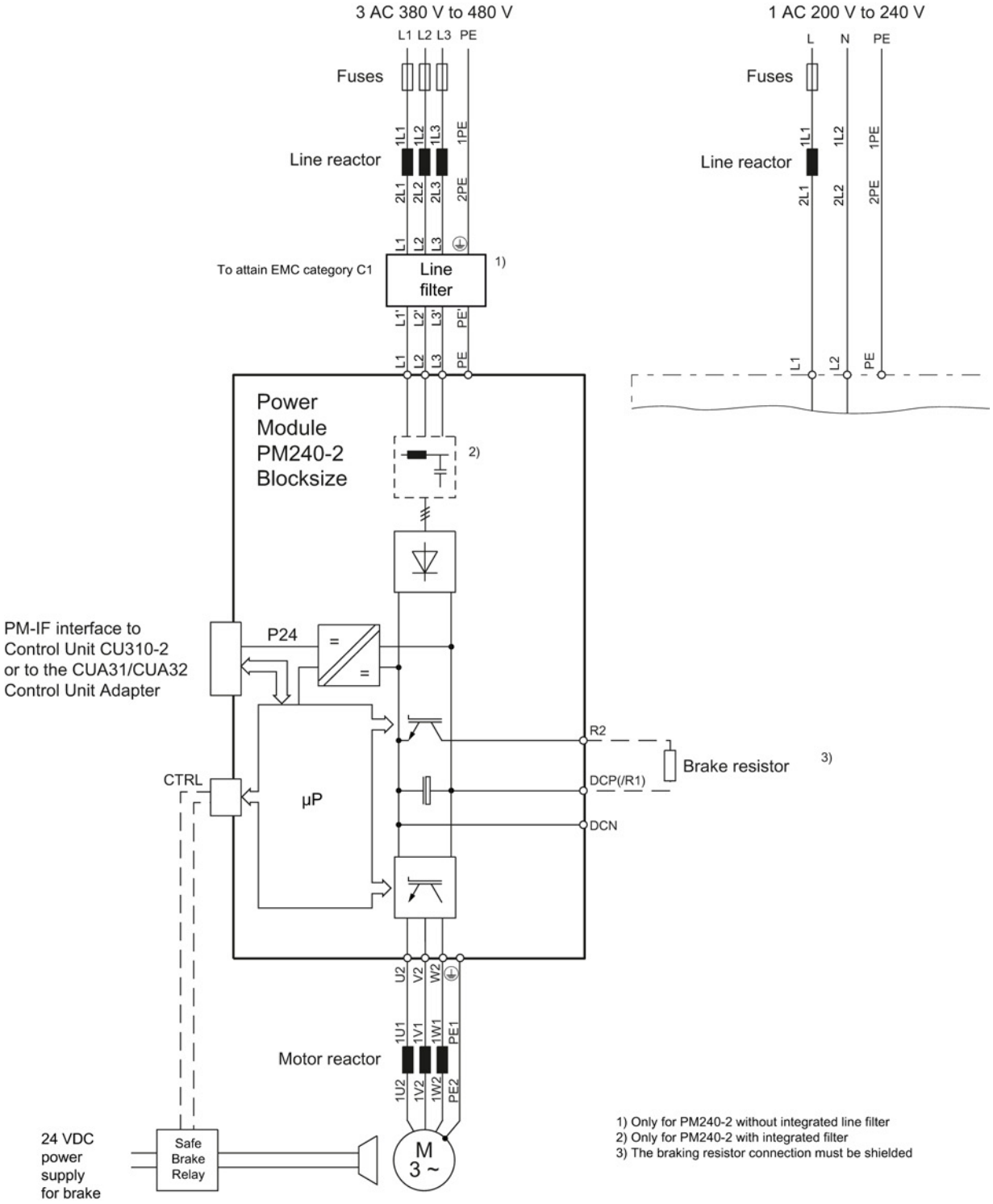

Figure 4-4 PM240-2 connection example

4.2.3.3 Line supply connection

Table 4- 2 Removable line connector

	Terminal	Signal name	Technical data
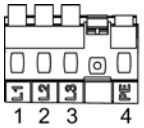	1	L1	Line conductor L1
	2	L2	Line conductor L2
	3	L3	Line conductor L3
	4	PE	PE connection

4.2.3.4 Braking resistor and DC link connection

Table 4- 3 Removable braking resistor and DC link connector

	Terminal	Signal name	Technical data
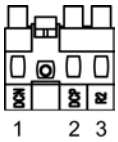	1	DCN	DC link negative
	2	DCP/R1	DC link positive and positive connection for braking resistor
	3	R2	Negative connection for the braking resistor

4.2.3.5 Motor connection

Table 4- 4 Removable motor connector

	Terminal	Signal name	Technical data
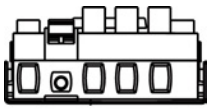	1	⏚	PE connection
	2	U2	Motor phase U
	3	V2	Motor phase V
	4	W2	Motor phase W

4.2.3.6 Safe brake relay connection

Table 4- 5 Connector

	Terminal	Designation	Technical data
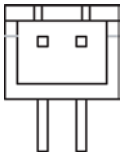	1	Low	Low signal safe brake relay to PM240-2
	2	High	High signal safe brake relay to PM240-2

Note

For further information, see Section Option module Safe Brake Relay (Page 378).

4.2.4 Dimension drawings

Power Modules frame size FSA / FSB / FSC

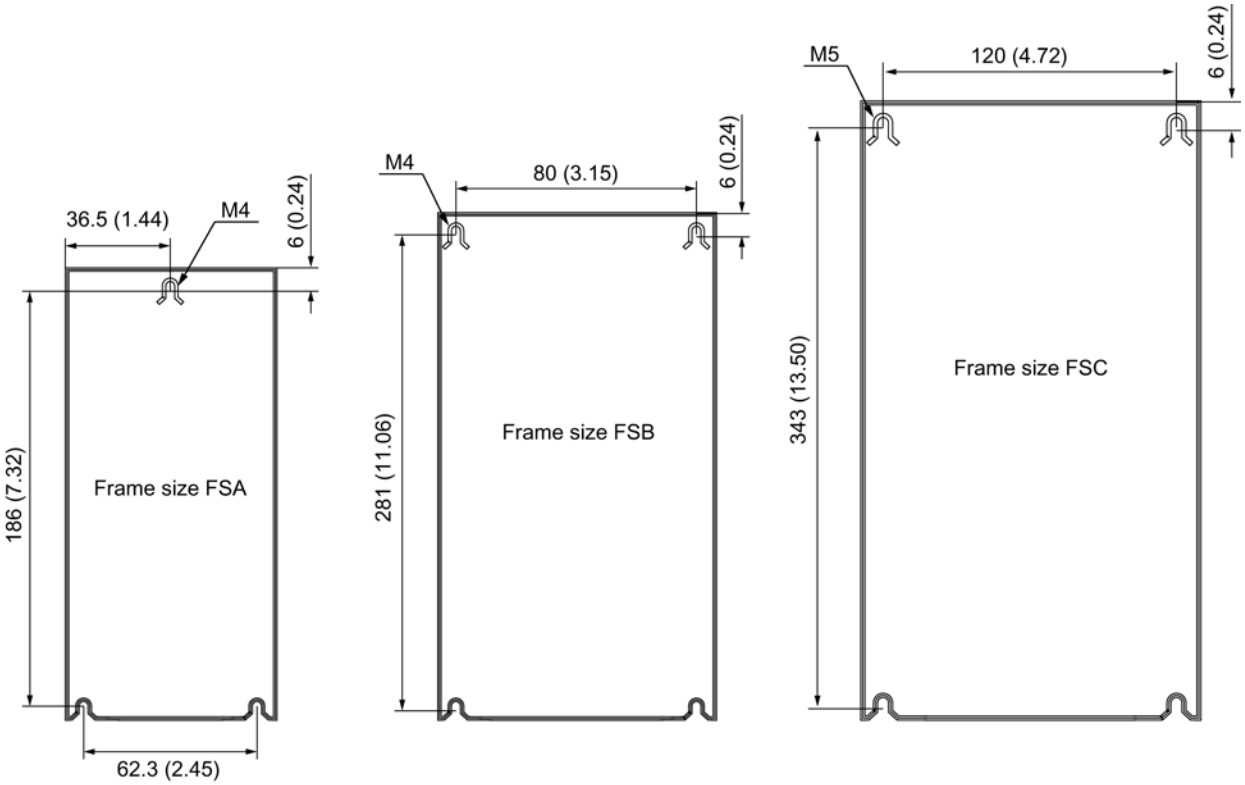

Figure 4-5 Drilling pattern of PM240-2 Power Modules, frame sizes FSA, FSB, FSC; all data in mm and (inches)

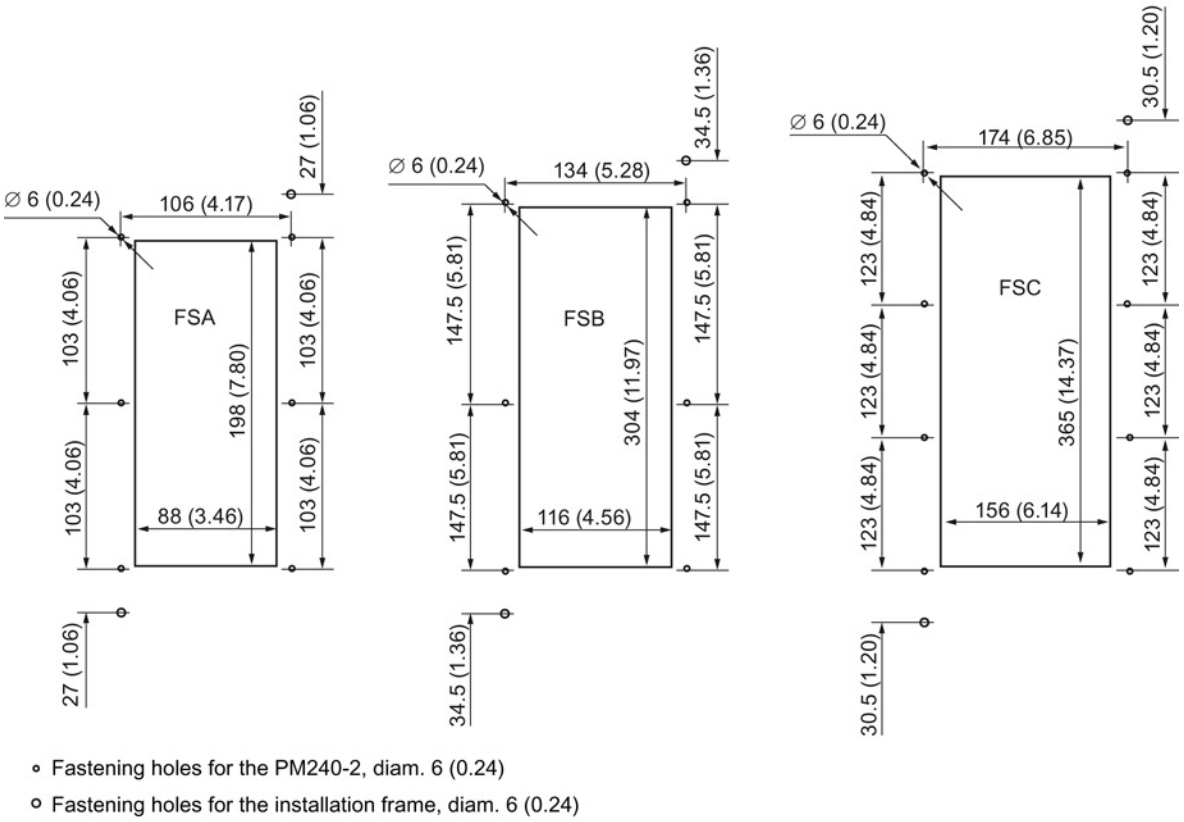

Figure 4-6 Drilling pattern of PM240-2 Push Through Power Modules, frame sizes FSA, FSB, FSC; all data in mm and (inches)

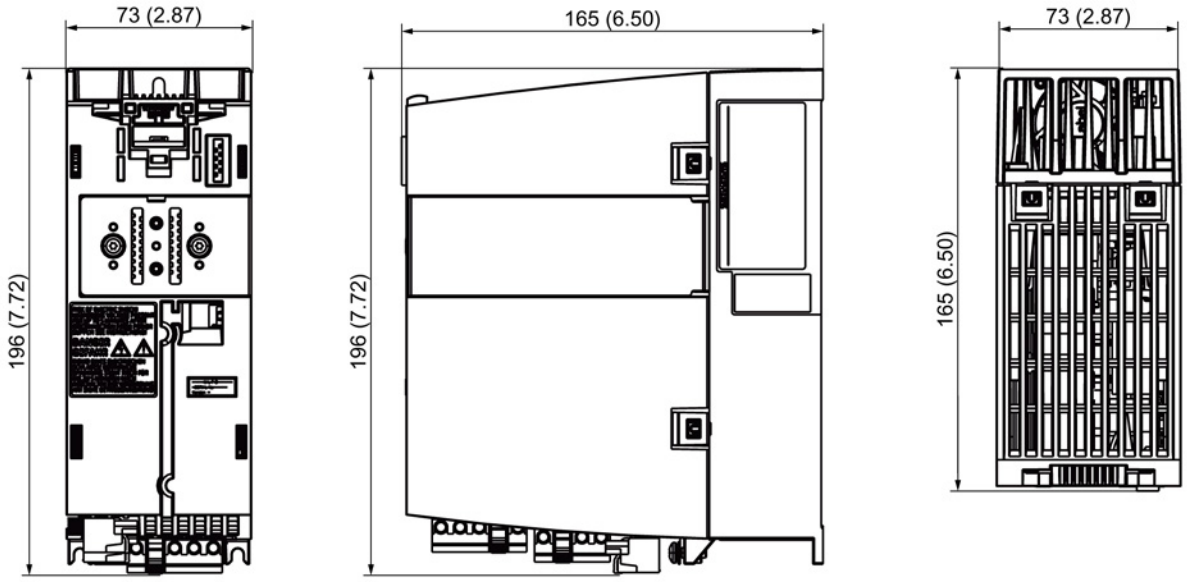

Figure 4-7 Dimension drawing of PM240-2 Power Modules, frame size FSA, all data in mm (inches)

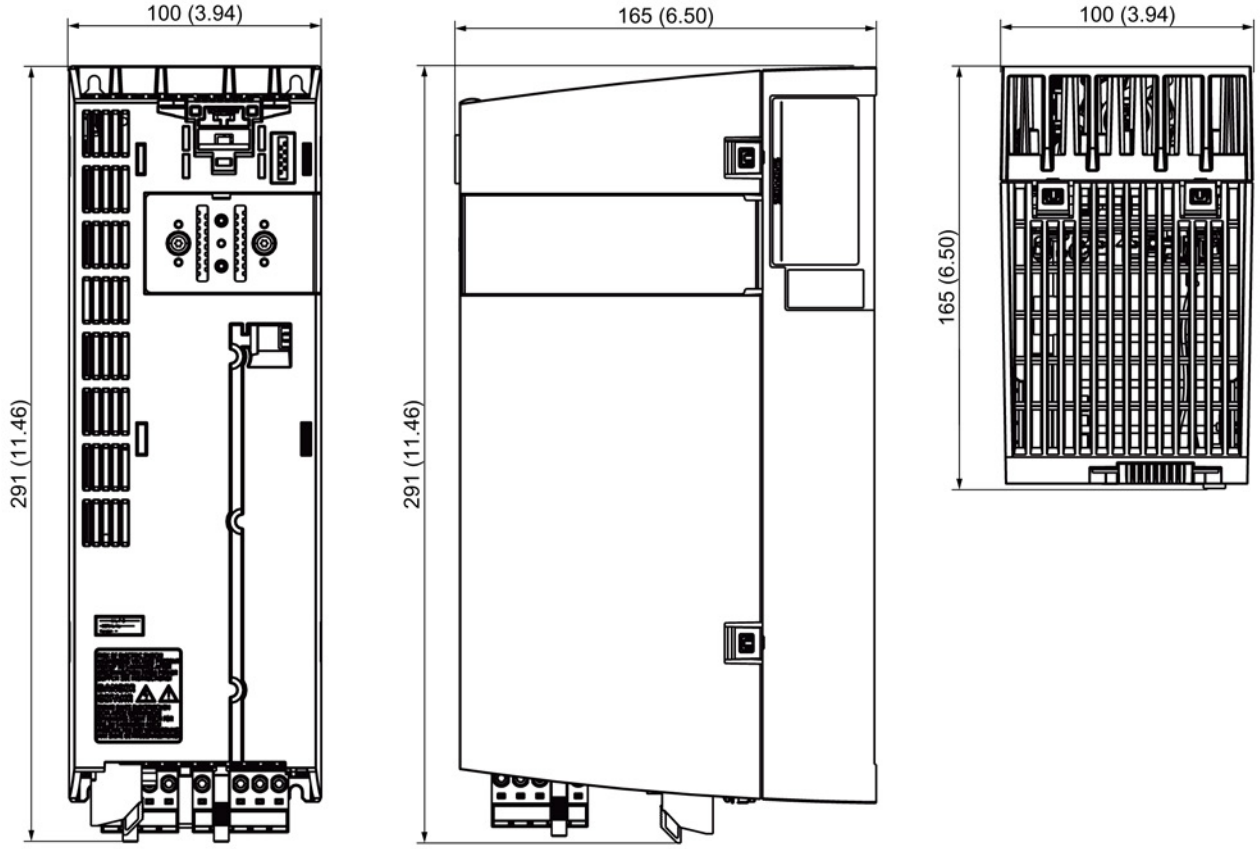

Figure 4-8 Dimension drawing of PM240-2 Power Modules, frame size FSB, all data in mm (inches)

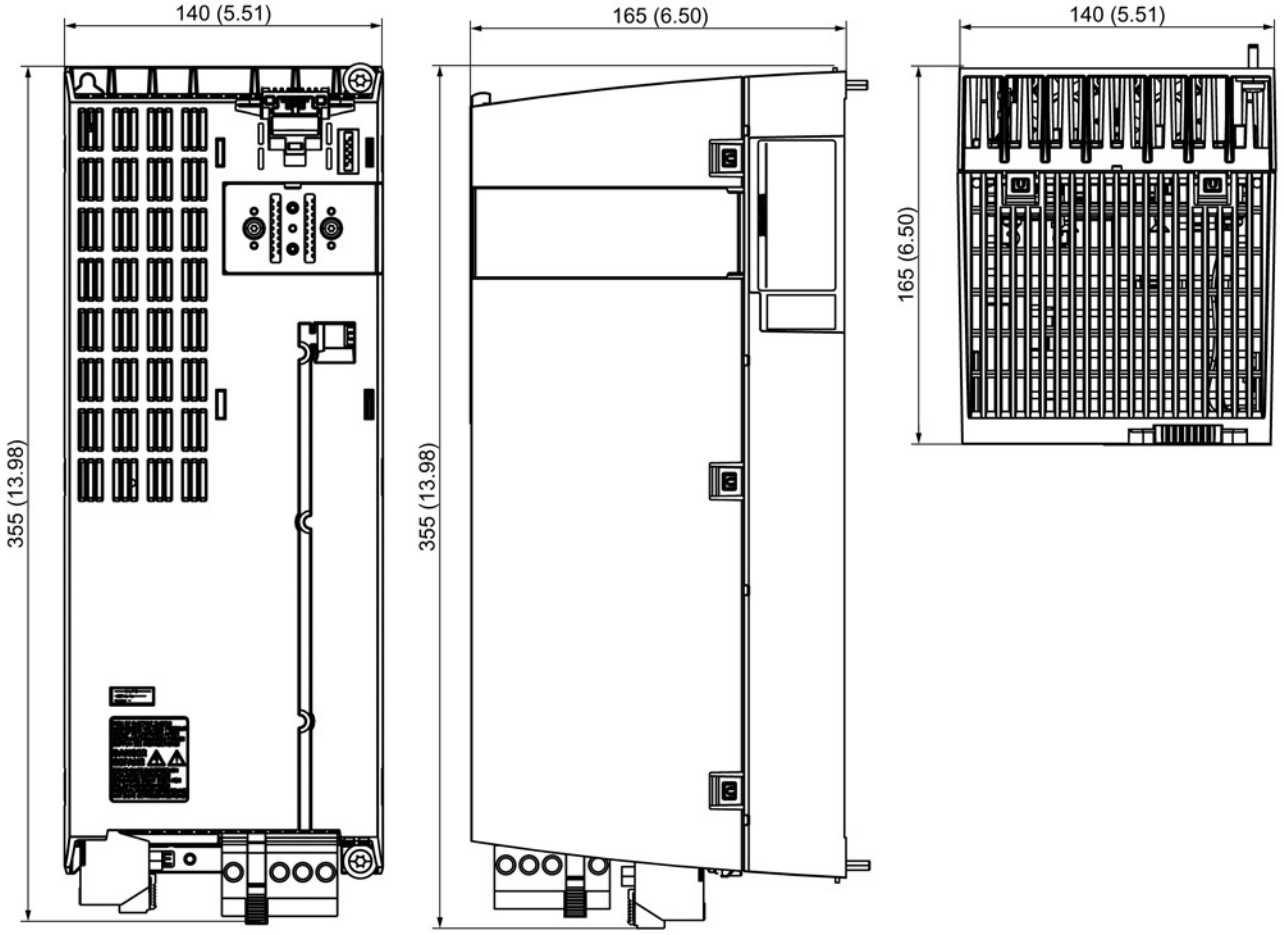

Figure 4-9 Dimension drawing of PM240-2 Power Modules, frame size FSC, all data in mm (inches)

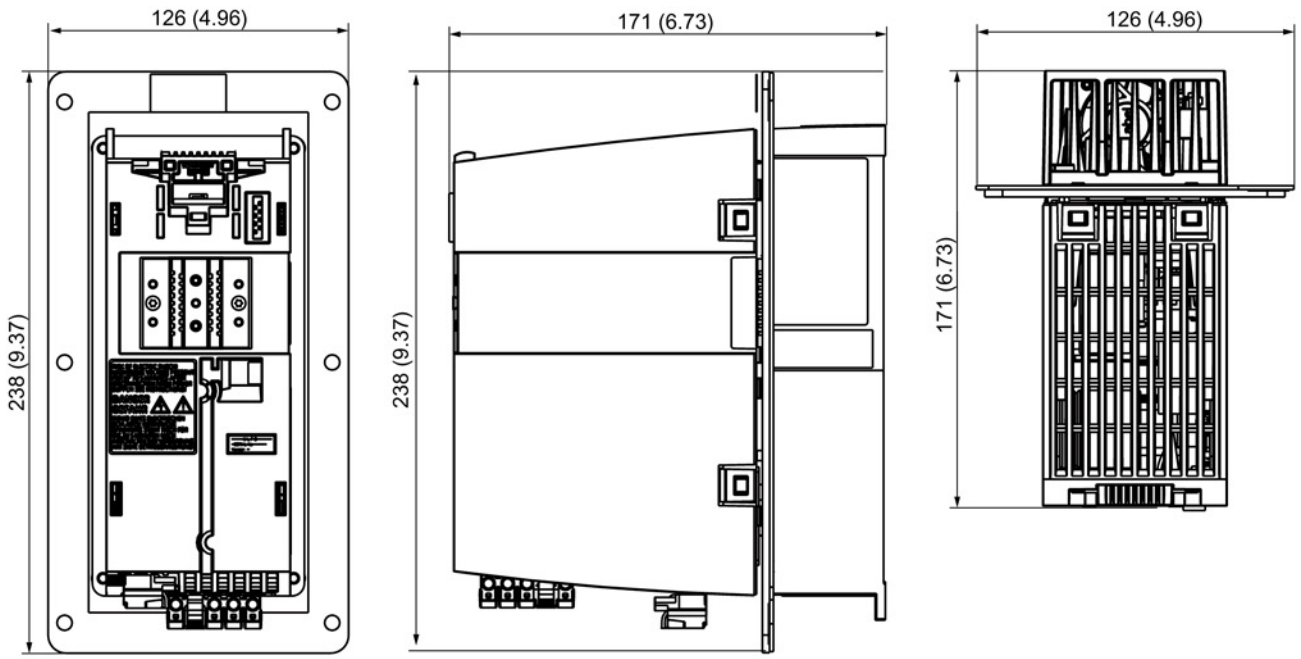

Figure 4-10 Dimension drawing of PM240-2 Push Through Power Modules, frame size FSA, all data in mm (inches)

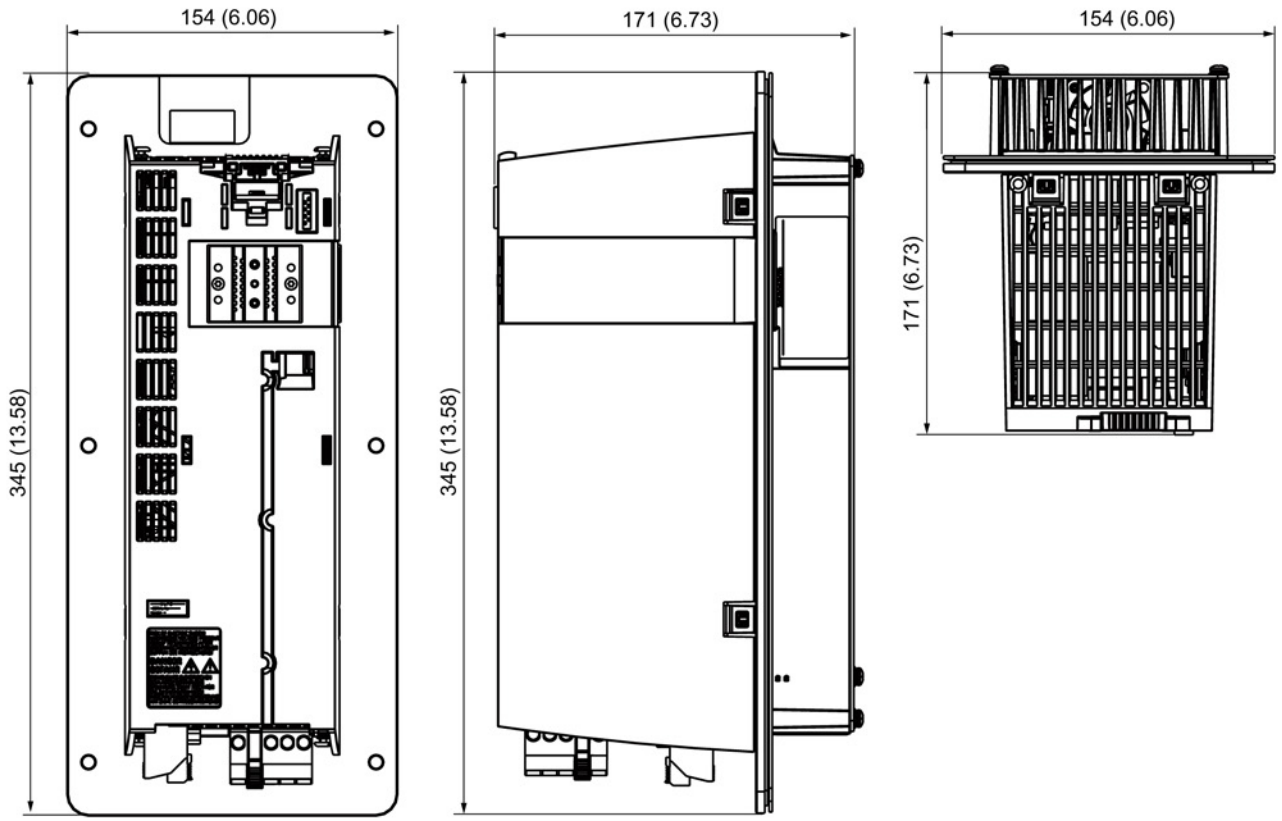

Figure 4-11 Dimension drawing of PM240-2 Push Through Power Modules, frame size FSB, all data in mm (inches)

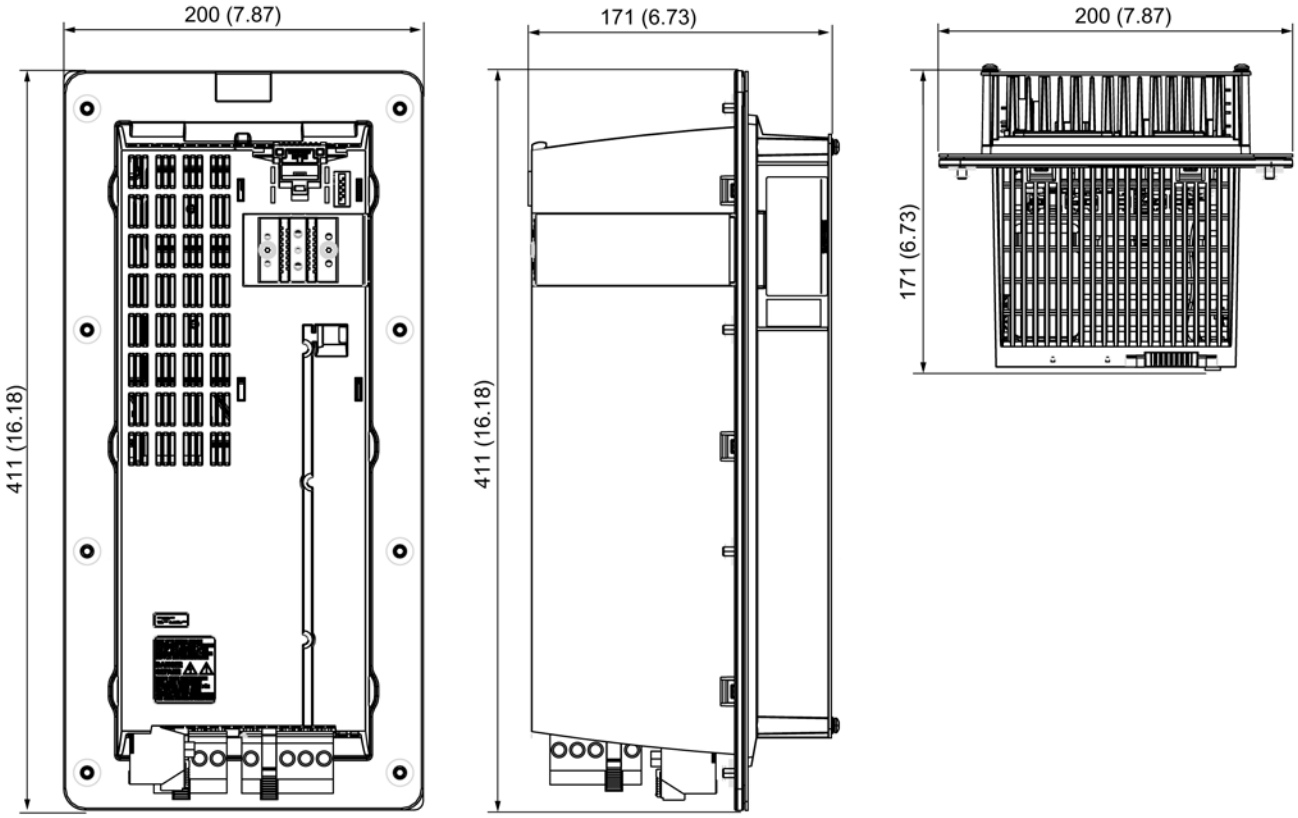

Figure 4-12 Dimension drawing of PM240-2 Push Through Power Modules, frame size FSC, all data in mm (inches)

Shield connection plates frame sizes FSA/FSB/FSC

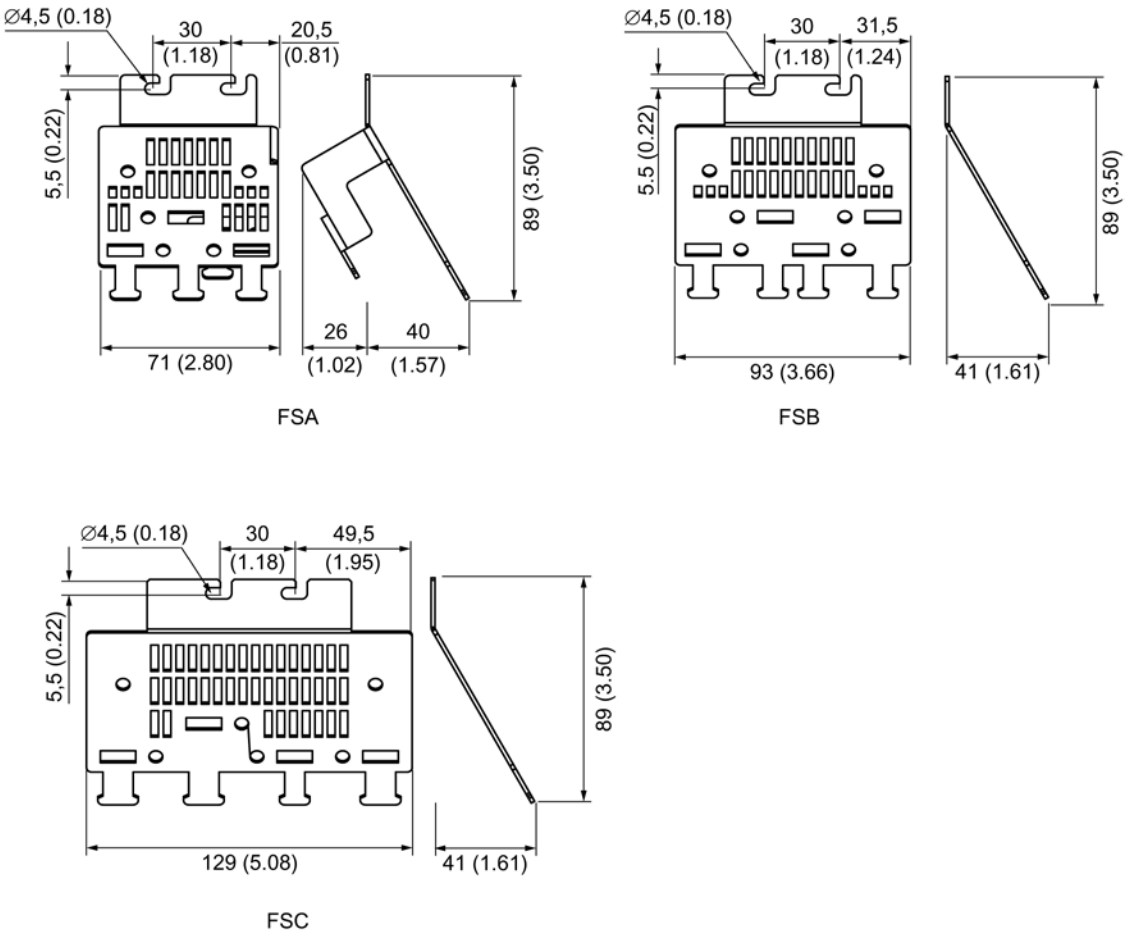

Figure 4-13 Dimension drawing of shield connection plates for PM240-2 Power Modules, frame size FSA to FSC, all data in mm (inches)

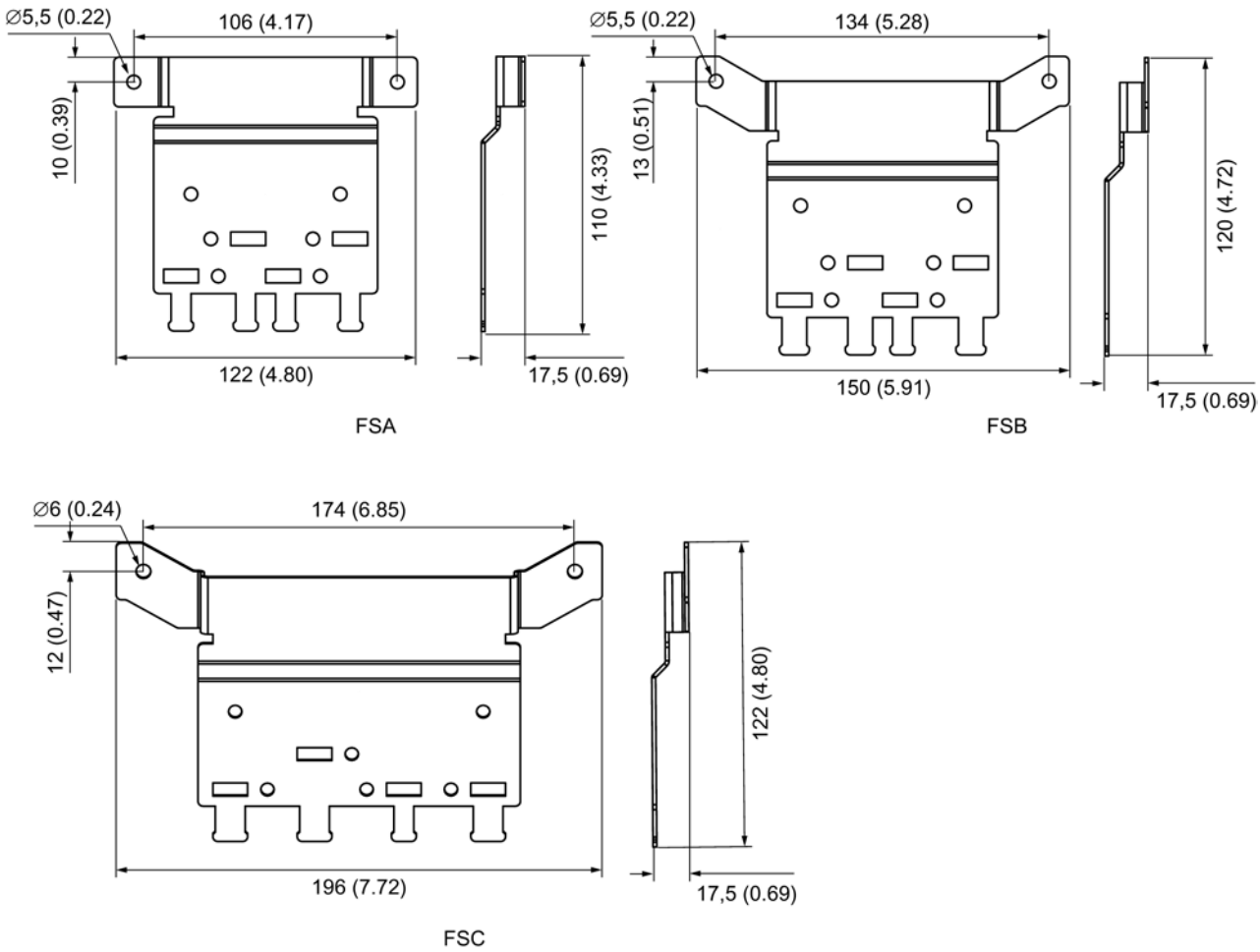

Figure 4-14 Dimension drawing of shield connection plates for PM240-2 Push Through Power Modules, frame size FSA to FSC, all data in mm (inches)

4.2.5 Mounting

Note

Mounting instructions

- Please refer to the notes for installing Power Modules in Section Safety information for 240-2 Power Modules (Page 90).
- You must mount the PM240-2 Push Through Power Modules on an unpainted metal surface in order to comply with EMC requirements.
- To be able to mount PM240-2 Push Through Power Modules, the wall thickness of the cabinet must be ≤ 3.5 mm.

Note

Installation frame for push through units

An installation frame should be used when push through units are installed in the cabinet. You can find more information about the installation frame in Section Mounting frame (Page 401).

This mounting frame includes the necessary seals and frame to ensure compliance with degree of protection IP54.

If you do not use the mounting frames, you must ensure that the required degree of protection is complied with using other appropriate measures.

4.2.5.1 Mounting dimensions and tightening torques

The mounting dimensions and the tightening torques for fixing the Power Modules are specified in the following table.

Table 4- 6 PM240-2, dimensions and tightening torques for mounting

Frame size		Height, width, depth (without Control Unit)		Fastening	Tightening torque
		Without shield connection plate	With shield connection plate		
FSA	mm	196 x 73 x 165	276 x 73 x 165	3 x M4 studs, 3 x M4 nuts, 3 x M4 washers	2.5 Nm with washers inserted
	Inch	7.72 x 2.87 x 6.50	10.87 x 2.87 x 6.50		
FSB	mm	291 x 100 x 165	370 x 100 x 165	4 x M4 studs, 4 x M4 nuts, 4 x M4 washers	2.5 Nm with washers inserted
	Inch	11.46 x 3.94 x 6.50	14.57 x 9.94 x 6.50		
FSC	mm	355 x 140 x 165	409 x 140 x 165	4 x M5 studs, 4 x M5 nuts, 4 x M5 washers	3.0 Nm with washers inserted
	Inch	13.98 x 5.51 x 6.50	16.10 x 5.51 x 6.50		

Table 4- 7 PM240-2 Push Through, dimensions and tightening torques for mounting

Frame size		Height, width, depth (without Control Unit)		Fastening	Tightening torque
		Without shield connection plate	With shield connection plate		
FSA	mm	238 x 126 x 171	322 x 126 x 171	6 x M5 studs, 6 x M5 nuts, 6 x M5 washers	3.5 Nm with washers inserted
	Inch	9.37 x 4.96 x 6.73	12.68 x 4.96 x 6.73		
FSB	mm	345 x 154 x 171	430 x 154 x 171	8 x M5 studs, 8 x M5 nuts, 8 x M5 washers	3.5 Nm with washers inserted
	Inch	13.58 x 6.06 x 6.73	16.93 x 6.06 x 6.73		
FSC	mm	411 x 200 x 171	500 x 200 x 171	8 x M5 studs, 8 x M5 nuts, 8 x M5 washers	3.5 Nm with washers inserted
	Inch	16.18 x 7.87 x 6.73	19.69 x 7.87 x 6.73		

4.2.5.2 Mounting the shielding plate

The shield connection plate is used to connect the shields of the 2 power cables.

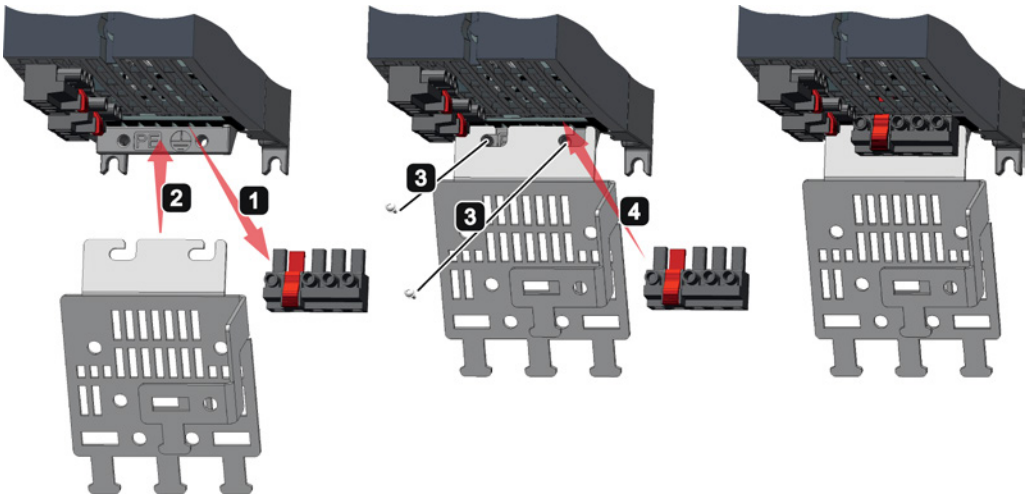

Figure 4-15 Mounting the shield connection plate on the PM240-2

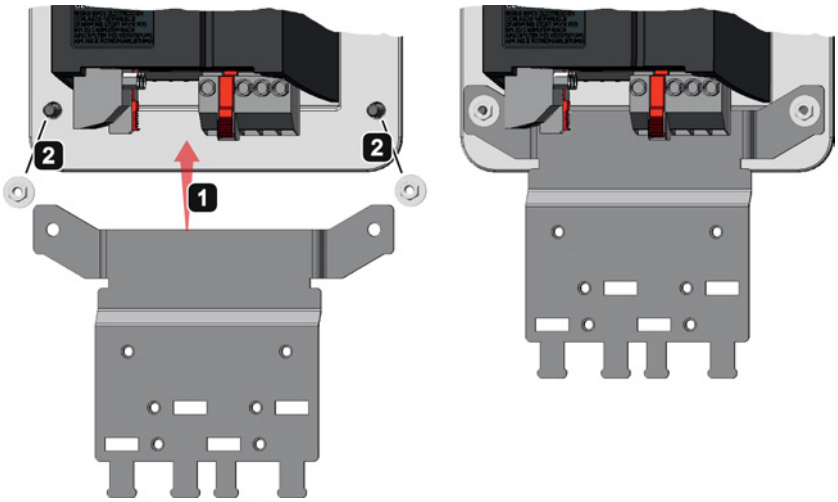

Figure 4-16 Mounting the shield connection plate on the PM240-2 Push Through

4.2.6 Technical data

Note

Degree of protection of PM240-2 Power Modules

The degree of protection of the PM240-2 Power Modules is IP20.

When Push Through Power Modules are installed in a cabinet with degree of protection IP54 using a suitable mounting frame and seals, the Power Modules also comply with this degree of protection.

According to UL the Push Through units only fulfill the requirements of an open type component.

4.2.6.1 200 V Power Modules

Table 4- 8 Technical data of the PM240-2, FSA (200 V)

Line voltage 1-phase/3-phase 200 … 240 VAC ± 10%				
		Internal		Push-through
Order number **without integrated line filter** **with integrated line filter**		6SL3210– 1PB13-0UL0 1PB13-0AL0	6SL3210– 1PB13-8UL0 1PB13-8AL0	6SL3211– 1PB13-8UL0 1PB13-8AL0
Output current Rated current I_n Base-load current I_H for S6 operation (40%) I_{s6} Peak current I_{max}	 A A A A	 3,0 2,3 3,3 4,6	 3,9 3,0 4,3 6,0	 3,9 3,0 4,3 6,0
Type rating [1] based on I_n based on I_H	 kW kW	 0,55 0,37	 0,75 0,55	 0,75 0,55
Rated pulse frequency	kHz	4	4	4
Power loss	kW	0,04	0,04	0,04[4]
Cooling air requirement	m^3/s	0,005	0,005	0,005
24 VDC supply for the Control Unit	 A	 1,0	 1,0	 1,0
Rated input current [2] with/without integrated line reactor	A	7,5	9,6	9,6
Class J UL fuses Rated current Short-circuit current rating SCCR	 A kA	 10 65	 15 65	 15 65
NH fuses **IEC 60947** Rated current	 A	3NA3 803 10	3NA3 805 16	3NA3 805 16
Resistance value of the external braking resistor	Ω	≥ 200	≥ 200	≥ 200

Line voltage 1-phase/3-phase 200 … 240 VAC ± 10%				
		Internal		Push-through
Order number **without integrated line filter** **with integrated line filter**		**6SL3210–** **1PB13-0UL0** **1PB13-0AL0**	**6SL3210–** **1PB13-8UL0** **1PB13-8AL0**	**6SL3211–** **1PB13-8UL0** **1PB13-8AL0**
Max. cable length to braking resistor	m	15	15	15
Line supply connection L1, L2, PE		Screw-type terminals cable cross-section: 1.5 … 2.5 mm² Tightening torque: 0.5 Nm		
Motor connection U2, V2, W2 ⏚				
DC-link connection, connection for braking resistor DCP/R1, DCN, R2				
PE connection		On line connector		
Max. motor cable length[3] shielded/unshielded	m	50 / 100		
Degree of protection		IP20		IP54
Weight Without line filter With line filter	 kg kg	 1,4 1,6	 1,4 1,6	 1,8 2,0

1) Rated output of a typical standard induction motor at 230 V.

2) The input current depends on the motor load and line impedance. The input currents apply for a load with the type rating (based on I_{rated}) for a line impedance corresponding to u_k = 1%.

3) Max. motor cable length 50 m (shielded) for PM240-2 Power Modules with integrated line filter to maintain the limit values of EN 61800-3 Category C2.

4) Power loss in the cabinet: 0.02 kW. The remaining power loss is dissipated via the heat sink.

Table 4- 9 Technical data of the PM240-2, FSB (200 V)

Line voltage 1-phase/3-phase 200 … 240 VAC ± 10%					
		Internal			Push-through
Order number **without integrated line filter** **with integrated line filter**		**6SL3210–** **1PB15-5UL0** **1PB15-5AL0**	**6SL3210–** **1PB17-4UL0** **1PB17-4AL0**	**6SL3210–** **1PB21-0UL0** **1PB21-0AL0**	**6SL3211–** **1PB21-0UL0** **1PB21-0AL0**
Output current Rated current I_n Base-load current I_H for S6 operation (40%) I_{s6} Peak current I_{max}	 A A A A	 5,5 3,9 6,1 8,3	 7,4 5,5 8,2 11,1	 10,4 7,4 11,5 15,6	 10,4 7,4 11,5 15,6
Type rating [1] based on I_n based on I_H	 kW kW	 1,1 0,75	 1,5 1,1	 2,2 1,5	 2,2 1,5
Rated pulse frequency	kHz	4	4	4	4
Power loss	kW	0,05	0,07	0,12	0,12[4]
Cooling air requirement	m³/s	0,0092	0,0092	0,0092	0,0092
24 VDC supply for the Control Unit	A	1,0	1,0	1,0	1,0

Line voltage 1-phase/3-phase 200 … 240 VAC ± 10%					
		Internal			Push-through
Order number **without integrated line filter** **with integrated line filter**		6SL3210– 1PB15-5UL0 1PB15-5AL0	6SL3210– 1PB17-4UL0 1PB17-4AL0	6SL3210– 1PB21-0UL0 1PB21-0AL0	6SL3211– 1PB21-0UL0 1PB21-0AL0
Rated input current [2] with/without integrated line reactor	A	13,5	18,1	24,0	24,0
Class J UL fuses Rated current Short-circuit current rating SCCR	 A kA	 20 65	 25 65	 35 65	 35 65
NH fuses **IEC 60947** Rated current	 A	3NE 1814-0 20	3NE 1815-0 25	3NE1803-0 35	3NE 1803-0 35
Resistance value of the external braking resistor	Ω	≥ 68	≥ 68	≥ 68	≥ 68
Max. cable length to braking resistor	 m	 15	 15	 15	 15
Line supply connection L1, L2, PE		Screw-type terminals cable cross-section: 1.5 … 6 mm² Tightening torque: 0.6 Nm			
Motor connection U2, V2, W2 ⏚					
DC-link connection, connection for braking resistor DCP/R1, DCN, R2					
PE connection		On line connector			
Max. motor cable length[3] shielded/unshielded	 m	 50 / 100			
Degree of protection		IP20			IP54
Weight Without line filter With line filter	 kg kg	 2,9 3,1	 2,9 3,1	 2,9 3,1	 3,4 3,7

1) Rated output of a typical standard induction motor at 230 V.

2) The input current depends on the motor load and line impedance. The input currents apply for a load with the type rating (based on I_{rated}) for a line impedance corresponding to u_k = 1%.

3) Max. motor cable length 50 m (shielded) for PM240-2 Power Modules with integrated line filter to maintain the limit values of EN 61800-3 Category C2.

4) Power loss in the cabinet: 0,045 kW. The remaining power loss is dissipated via the heat sink.

Table 4- 10 Technical data of the PM240-2, FSC (200 V)

Line voltage 1-phase/3-phase 200 … 240 VAC ± 10%					3-phase 200 … 240 VAC ±10%	
		Internal		Push-through	Internal	
Order number **without integrated line filter** **with integrated line filter**		6SL3210– 1PB21-4UL0 1PB21-4AL0	6SL3210– 1PB21-8UL0 1PB21-8AL0	6SL3211– 1PB21-8UL0 1PB21-8AL0	6SL3210– 1PC22-2UL0 1PC22-2AL0	6SL3210– 1PC22-8UL0 1PC22-8AL0
Output current Rated current I_n Base-load current I_H for S6 operation (40%) I_{s6} Peak current I_{max}	 A A A A	 13,6 10,4 15,0 20,8	 17,5 13,6 19,3 27,2	 17,5 13,6 19,3 27,2	 22,0 17,5 24,2 35,0	 28,0 22,0 30,8 44,0
Type rating [1] based on I_n based on I_H	 kW kW	 3,0 2,2	 4,0 3,0	 4,0 3,0	 5,5 4,0	 7,5 5,5
Rated pulse frequency	kHz	4	4	4	4	4
Power loss	kW	0,14	0,18	0,18[4]	0,2	0,26
Cooling air requirement	m^3/s	0,0185	0,0185	0,0185	0,0185	0,0185
24 VDC supply for the Control Unit	 A	 1,0	 1,0	 1,0	 1,0	 1,0
Rated input current [2] with/without integrated line reactor	A	35,9	43,0	43,0	29,0	37,0
Class J UL fuses Rated current Short-circuit current rating SCCR	 A kA	 50 65	 60 65	 60 65	 40 65	 50 65
NH fuses **IEC 60947** Rated current	 A	3NE 1817-0 50	3NE 1818-0 63	3NE 1818-0 63	3NE 1802-0 40	3NE 1817-0 50
Resistance value of the external braking resistor	Ω	≥ 75	≥ 75	≥ 37	≥ 20	≥ 20
Max. cable length to braking resistor	 m	 15	 15	 15	 15	 15
Line supply connection L1, L2, PE		Screw-type terminals cable cross-section: 6 … 16 mm^2 Tightening torque: 1.3 Nm				
Motor connection U2, V2, W2 ⏚						
DC-link connection, connection for braking resistor DCP/R1, DCN, R2						

Line voltage 1-phase/3-phase 200 … 240 VAC ± 10%					3-phase 200 … 240 VAC ±10%	
		Internal		Push-through	Internal	
Order number without integrated line filter with integrated line filter		6SL3210– 1PB21-4UL0 1PB21-4AL0	6SL3210– 1PB21-8UL0 1PB21-8AL0	6SL3211– 1PB21-8UL0 1PB21-8AL0	6SL3210– 1PC22-2UL0 1PC22-2AL0	6SL3210– 1PC22-8UL0 1PC22-8AL0
PE connection		On line connector				
Max. motor cable length[3] shielded/unshielded	m	50 / 100				
Degree of protection		IP20		IP54	IP20	
Weight Without line filter With line filter	 kg kg	 5,0 5,2	 5,0 5,2	 5,8 6,3	 5,0 5,2	 5,0 5,2

1) Rated output of a typical standard induction motor at 230 V.

2) The input current depends on the motor load and line impedance. The input currents apply for a load with the type rating (based on I_{rated}) for a line impedance corresponding to u_k = 1%.

3) Max. motor cable length 50 m (shielded) for PM240-2 Power Modules with integrated line filter to maintain the limit values of EN 61800-3 Category C2.

4) Power loss in the cabinet: 0,075 kW. The remaining power loss is dissipated via the heat sink.

4.2.6.2 400 V Power Modules

Table 4- 11 Technical data of the PM240-2, FSA (400 V) (1/2)

Line voltage 3-phase 380 … 480 VAC ± 10%					
		Internal			
Order number **without integrated line filter** **with integrated line filter**		**6SL3210–** **1PE11-8UL1** **1PE11-8AL1**	**6SL3210–** **1PE12-3UL1** **1PE12-3AL1**	**6SL3210–** **1PE13-2UL1** **1PE13-2AL1**	**6SL3210–** **1PE14-3UL1** **1PE14-3AL1**
Output current Rated current I_n Base-load current I_H for S6 operation (40%) I_{s6} Peak current I_{max}	 A A A A	 1,7 1,3 2,0 2,6	 2,2 1,7 2,5 3,4	 3,1 2,2 3,5 4,7	 4,1 3,1 4,5 6,2
Type rating [1] based on I_n based on I_H	 kW kW	 0,55 0,37	 0,75 0,55	 1,1 0,75	 1,5 1,1
Rated pulse frequency	kHz	4	4	4	4
Power loss	kW	0,04	0,04	0,04	0,07
Cooling air requirement	m^3/s	0,005	0,005	0,005	0,005
24 VDC supply for the Control Unit	 A	 1,0	 1,0	 1,0	 1,0
Rated input current [2] with/without integrated line reactor	A	2,3	2,9	4,1	5,5
Class J UL fuses Rated current Short-circuit current rating SCCR	 A kA	 4 65	 4 65	 6 65	 10 65
NH fuses **IEC 60947** Rated current	 A	3NA3 804 4	3NA3 804 4	3NA3 801 6	3NA3 803 10
Resistance value of the external braking resistor	Ω	≥ 370	≥ 370	≥ 370	≥ 370
Max. cable length to braking resistor	 m	 15	 15	 15	 15
Line supply connection L1, L2, L3, PE		Screw-type terminals cable cross-section: 1.5 … 2.5 mm^2 Tightening torque: 0.5 Nm			
Motor connection U2, V2, W2 ⏚					
DC-link connection, connection for braking resistor DCP/R1, DCN, R2					

Line voltage 3-phase 380 … 480 VAC ± 10%					
		Internal			
Order number without integrated line filter with integrated line filter		6SL3210– 1PE11-8UL1 1PE11-8AL1	6SL3210– 1PE12-3UL1 1PE12-3AL1	6SL3210– 1PE13-2UL1 1PE13-2AL1	6SL3210– 1PE14-3UL1 1PE14-3AL1
PE connection		On line connector			
Max. motor cable length[3] shielded/unshielded	m	50 / 100			
Degree of protection		IP20			
Weight Without line filter With line filter	 kg kg	 1,4 1,5	 1,4 1,5	 1,4 1,5	 1,4 1,5

1) Rated output of a typical standard induction motor at 400 V.

2) The input current depends on the motor load and line impedance. The input currents apply for a load with the type rating (based on I_{rated}) for a line impedance corresponding to u_k = 1%.

3) Max. motor cable length 50 m (shielded) for PM240-2 Power Modules with integrated line filter to maintain the limit values of EN 61800-3 Category C2.

Table 4- 12 Technical data of the PM240-2, FSA (400 V) (2/2)

Line voltage 3-phase 380 … 480 VAC ± 10%				
		Internal		Push-through
Order number without integrated line filter with integrated line filter		6SL3210– 1PE16-1UL1 1PE16-1AL1	6SL3210– 1PE18-0UL1 1PE18-0AL1	6SL3211– 1PE18-0UL1 1PE18-0UL1
Output current Rated current I_n Base-load current I_H for S6 operation (40%) I_{s6} Peak current I_{max}	 A A A A	 5,9 4,1 6,5 8,9	 7,7 5,9 8,5 11,8	 7,7 5,9 8,5 11,8
Type rating [1] based on I_n based on I_H	 kW kW	 2,2 1,5	 3,0 2,2	 3,0 2,2
Rated pulse frequency	kHz	4	4	4
Power loss	kW	0,1	0,12	0,12[4]
Cooling air requirement	m^3/s	0,005	0,005	0,007
24 VDC supply for the Control Unit	 A	 1,0	 1,0	 1,0
Rated input current [2] with/without integrated line reactor	A	7,7	10,1	10,1
Class J UL fuses Rated current Short-circuit current rating SCCR	 A kA	 10 65	 15 65	 10 65
NH fuses **IEC 60947** Rated current	 A	3NA3 803 10	3NA3 805 16	3NA3 805 15

Line voltage 3-phase 380 … 480 VAC ± 10%				
		Internal		Push-through
Order number **without integrated line filter** **with integrated line filter**		**6SL3210–** **1PE16-1UL1** **1PE16-1AL1**	**6SL3210–** **1PE18-0UL1** **1PE18-0AL1**	**6SL3211–** **1PE18-0UL1** **1PE18-0UL1**
Resistance value of the external braking resistor	Ω	≥ 140	≥ 140	≥ 140
Max. cable length to braking resistor	m	15	15	15
Line supply connection L1, L2, L3, PE		Screw-type terminals cable cross-section: 1.5 … 2.5 mm² Tightening torque: 0,5 Nm		
Motor connection U2, V2, W2 ⏚				
DC-link connection, connection for braking resistor DCP/R1, DCN, R2				
PE connection		On line connector		
Max. motor cable length[3] (without external options)	m	50 / 100		
Degree of protection		IP20		IP54
Weight Without line filter With line filter	 kg kg	 1,4 1,5	 1,4 1,5	 1,7 1,8

1) Rated output of a typical standard induction motor at 400 V.

2) The input current depends on the motor load and line impedance. The input currents apply for a load with the type rating (based on I_{rated}) for a line impedance corresponding to u_k = 1%.

3) Max. motor cable length 50 m (shielded) for PM240-2 Power Modules with integrated line filter to maintain the limit values of EN 61800-3 Category C2.

4) Power loss in the cabinet: 0.02 kW. The remaining power loss is dissipated via the heat sink.

Table 4- 13 Technical data of the PM240-2, FSB (400 V)

Line voltage 3-phase 380 … 480 VAC ± 10%					
		Internal			Push-through
Order number **without integrated line filter** **with integrated line filter**		**6SL3210–** **1PE21-1UL0** **1PE21-1AL0**	**6SL3210–** **1PE21-4UL0** **1PE21-4AL0**	**6SL3210–** **1PE21-8UL0** **1PE21-8AL0**	**6SL3211–** **1PE21-8UL0** **1PE21-8AL0**
Output current Rated current I_n Base-load current I_H for S6 operation (40%) I_{s6} Peak current I_{max}	 A A A A	 10,2 7,7 11,2 15,4	 13,2 10,2 14,5 20,4	 18,0 13,2 19,8 27,0	 18,0 13,2 19,8 27,0
Type rating [1] based on I_n based on I_H	 kW kW	 4,0 3,0	 5,5 4,0	 7,5 5,5	 7,5 5,5
Rated pulse frequency	kHz	4	4	4	4
Power loss	kW	0,11	0,15	0,2	0,2[4]

Line voltage 3-phase 380 … 480 VAC ± 10%					
		Internal			Push-through
Order number **without integrated line filter** **with integrated line filter**		**6SL3210–** **1PE21-1UL0** **1PE21-1AL0**	**6SL3210–** **1PE21-4UL0** **1PE21-4AL0**	**6SL3210–** **1PE21-8UL0** **1PE21-8AL0**	**6SL3211–** **1PE21-8UL0** **1PE21-8AL0**
Cooling air requirement	m^3/s	0,0092	0,0092	0,0092	0,0092
24 VDC supply for the Control Unit	A	1,0	1,0	1,0	1,0
Rated input current [2] with/without integrated line reactor	A	13,3	17,2	22,2	22,2
Class J UL fuses Rated current Short-circuit current rating SCCR	 A kA	 20 65	 25 65	 35 65	 35 65
NH fuses **IEC 60947** Rated current	 A	3NE 1814-0 20	3NE 1815-0 25	3NE 1803-0 35	3NE 1803-0 35
Resistance value of the external braking resistor	Ω	≥ 75	≥ 75	≥ 75	≥ 75
Max. cable length to braking resistor	m	15	15	15	15
Line supply connection L1, L2, L3, PE		Screw-type terminals cable cross-section: 1.5 … 6 mm^2 Tightening torque: 0.6 Nm			
Motor connection U2, V2, W2 ⏚					
DC-link connection, connection for braking resistor DCP/R1, DCN, R2					
PE connection		On line connector			
Max. motor cable length[3] shielded/unshielded	m	50 / 100			
Degree of protection		IP20			IP54
Weight Without line filter With line filter	 kg kg	 2,9 3,1	 2,9 3,1	 3,0 3,2	 3,6 3,9

1) Rated output of a typical standard induction motor at 400 V.

2) The input current depends on the motor load and line impedance. The input currents apply for a load with the type rating (based on I_{rated}) for a line impedance corresponding to u_k = 1%.

3) Max. motor cable length 50 m (shielded) for PM240-2 Power Modules with integrated line filter to maintain the limit values of EN 61800-3 Category C2.

4) Power loss in the cabinet: 0,045 kW. The remaining power loss is dissipated via the heat sink.

Table 4- 14 Technical data of the PM240-2, FSC (400 V)

Line voltage 3-phase 380 … 480 VAC ± 10%				
		Internal		Push-through
Order number **without integrated line filter** **with internal line filter**		**6SL3210–** **1PE22-7UL0** **1PE22-7AL0**	**6SL3210–** **1PE23-3UL0** **1PE23-3AL0**	**6SL3211–** **1PE23-3UL0** **1PE23-3AL0**
Output current Rated current I_n Base-load current I_H for S6 operation (40%) I_{s6} Peak current I_{max}	 A A A A	 26,0 18,0 28,6 39,0	 32,0 26,0 37,1 52,0	 32,0 26,0 37,1 52,0
Type rating [1] based on I_n based on I_H	 kW kW	 11,0 7,5	 15,0 11,0	 15,0 11,0
Rated pulse frequency	kHz	4	4	4
Power loss	kW	0,3	0,37	0,37[4]
Cooling air requirement	m^3/s	0,0185	0,0185	0,0185
24 VDC supply for the Control Unit	 A	 1,0	 1,0	 1,0
Rated input current [2] with/without integrated line reactor	A	32,6	39,9	39,9
Class J UL fuses Rated current Short-circuit current rating SCCR	 A kA	 50 65	 50 65	 50 65
NH fuses **IEC 60947** Rated current	 A	3NE 1817-0 50	3NE 1817-0 50	3NE 1817-0 50
Resistance value of the external braking resistor	Ω	≥ 30	≥ 30	≥ 30
Max. cable length to braking resistor	 m	 15	 15	 15
Line supply connection L1, L2, L3, PE		Screw-type terminals cable cross-section: 6 … 16 mm^2 Tightening torque: 1.3 Nm		
Motor connection U2, V2, W2 ⏚				
DC-link connection, connection for braking resistor DCP/R1, DCN, R2				

Line voltage 3-phase 380 … 480 VAC ± 10%				
		Internal		Push-through
Order number without integrated line filter with internal line filter		6SL3210– 1PE22-7UL0 1PE22-7AL0	6SL3210– 1PE23-3UL0 1PE23-3AL0	6SL3211– 1PE23-3UL0 1PE23-3AL0
PE connection		On line connector		
Max. motor cable length[3] shielded/unshielded	m	50 / 100		
Degree of protection		IP20		IP54
Weight Without line filter With line filter	 kg kg	 4,7 5,3	 4,8 5,4	 5,8 6,3

1) Rated output of a typical standard induction motor at 400 V.

2) The input current depends on the motor load and line impedance. The input currents apply for a load with the type rating (based on I_{rated}) for a line impedance corresponding to u_k = 1%.

3) Max. motor cable length 50 m (shielded) for PM240-2 Power Modules with integrated line filter to maintain the limit values of EN 61800-3 Category C2.

4) Power loss in the cabinet: 0,075 kW. The remaining power loss is dissipated via the heat sink.

4.2.6.3 Characteristics

Overload capability

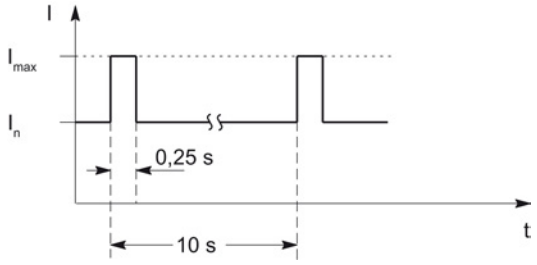

Figure 4-17 Duty cycle with initial load (for servo drives)

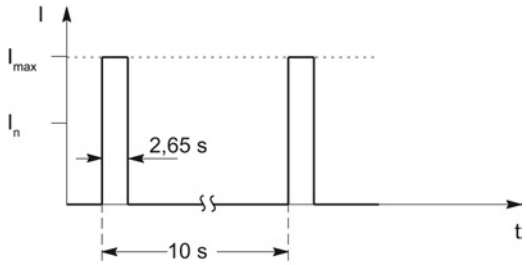

Figure 4-18 Duty cycle without initial load (for servo drives)

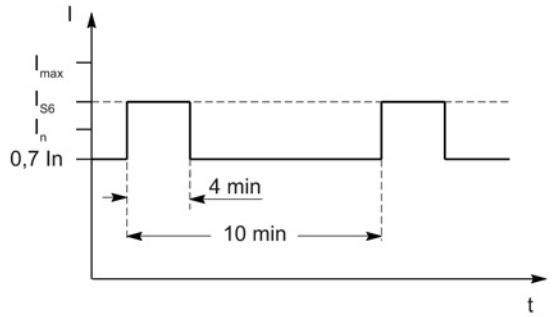

Figure 4-19 S6 duty cycle with initial load (for servo drives)

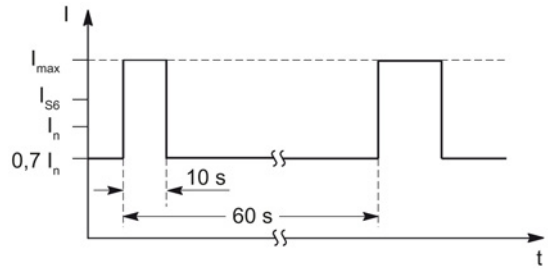

Figure 4-20 Duty cycle with initial load (for servo drives)

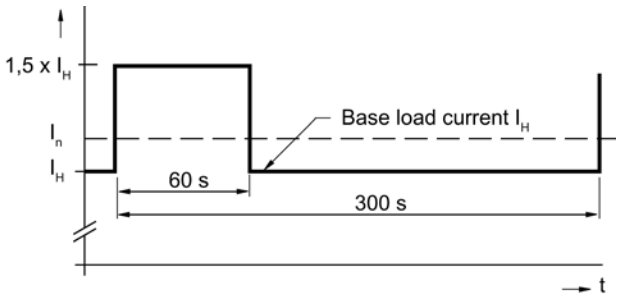

Figure 4-21 Duty cycle with 60 s overload with a duty cycle duration of 300 s

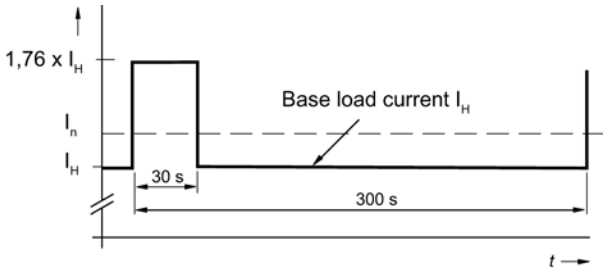

Figure 4-22 Duty cycle with 30 s overload with a duty cycle duration of 300 s

Note

The short leading edges of the duty cycles shown can only be achieved using speed or torque control.

Derating characteristics for PM240-2 Power Modules in Blocksize format

For further information, see Section Derating as a function of the ambient temperature, pulse frequency, and installation altitude (Page 37).

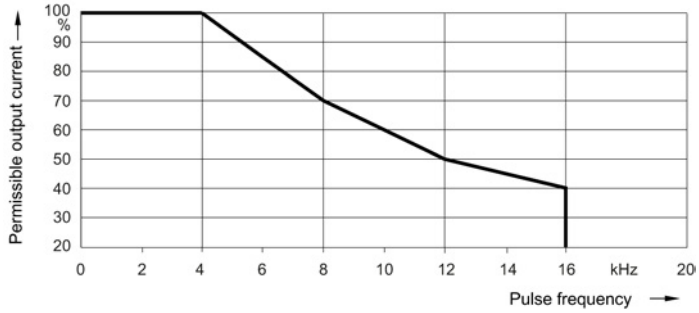

Figure 4-23 Output current as a function of the pulse frequency

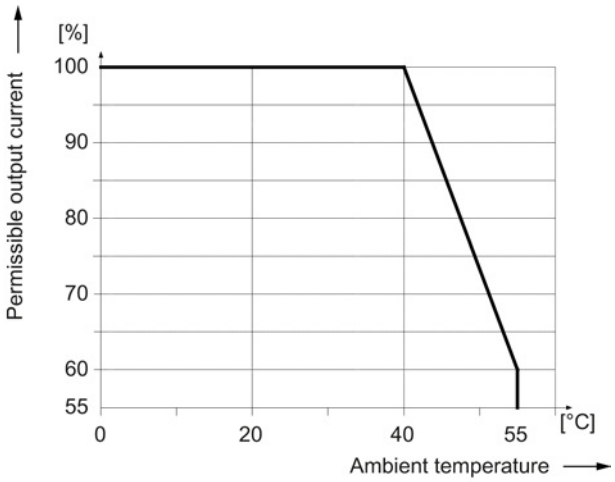

Figure 4-24 Output current as a function of the ambient temperature

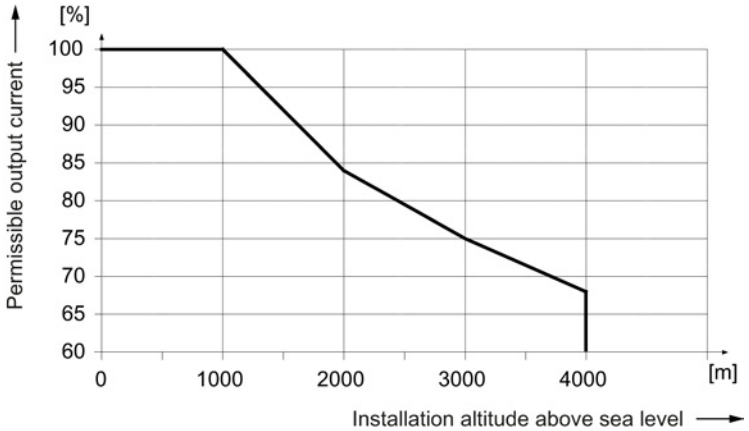

Figure 4-25 Output current as a function of the installation altitude

It is not permissible that the Power Module is operated with its maximum rated current at output frequencies below 10 Hz. Otherwise, its service life could be reduced.

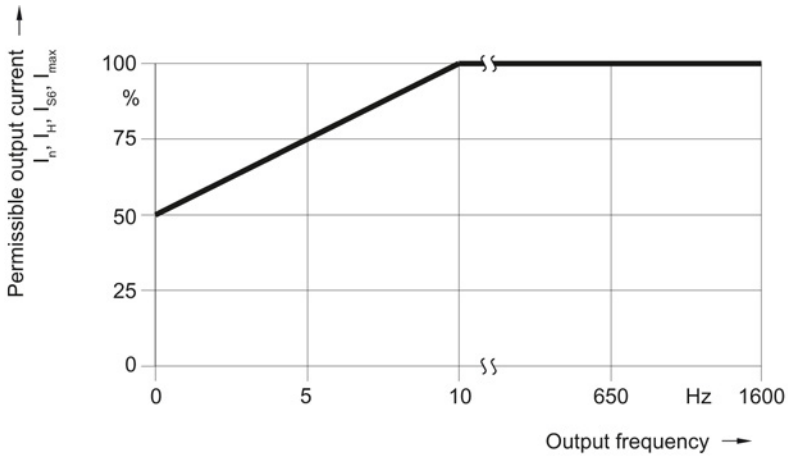

Figure 4-26 Output current as a function of the output frequency

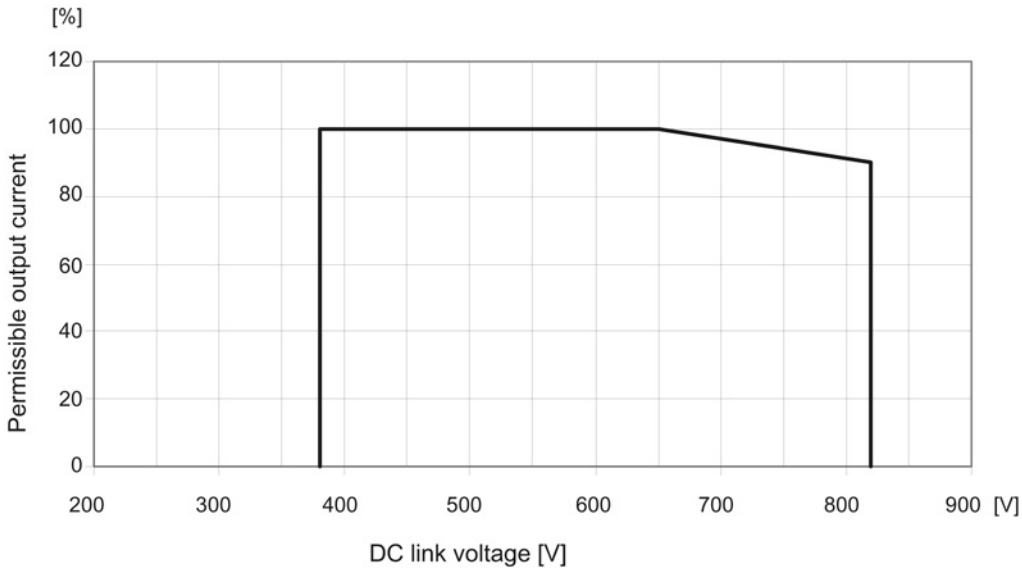

Figure 4-27 Current derating as a function of the DC-link voltage

4.3 Power Modules Blocksize (PM340)

4.3.1 Description

The Power Modules in blocksize format are designed as follows:

- Line-side diode rectifier
- DC link electrolytic capacitors with pre-charging circuit
- Output inverter
- Braking chopper for (external) braking resistor
- 24 V DC / 1 A power supply
- Gating unit, actual value acquisition
- Fan to cool the power semiconductors

The Power Modules cover the power range from 0.12 kW to 90.0 kW and are available in versions with and without line filter.

Table 4- 15 Overview, Power Modules PM340 (selection)

Power Module (230 V) frame size FSA, with and without integrated line filter Power Module (400 V) frame size FSA, without integrated line filter	Power Module frame size FSB, with and without integrated line filter

Power Module frame size FSC, with and without integrated line filter	Power Module frame size FSD, with and without integrated line filter
Power Module frame size FSE, with and without integrated line filter	Power Module frame size FSF, with and without integrated line filter

4.3.2 Safety instructions for Power Modules blocksize format

⚠ WARNING

Danger to life if the fundamental safety instructions and residual risks are not observed

The non-observance of the fundamental safety instructions and residual risks stated in Chapter 1 can result in accidents with severe injuries or death.

- Observe the fundamental safety instructions.
- Consider the residual risks for the risk evaluation.

⚠ WARNING

Danger of fire through overheating caused by insufficient ventilation and installation clearances

Insufficient ventilation and installation clearances result in overheating with danger to persons as a result of smoke and fire. Further, increased failures can occur and the service life of units/systems shortened.

- Always mount Power Modules in a vertical position.
- Maintain the following clearances between the components when mounting [1]:
  - Frame size FSA: 30 mm (1.18 inches)
  - Frame size FSB: 40 mm (1.57 inches)
  - Frame size FSC: 50 mm (1.96 inches)
- Maintain the following ventilation clearances above and below the component:
  - Frame sizes FSA and FSB: 100 mm (3.93 inches)
  - Frame size FSC: 125 mm (4.92 inches)
  - Frame sizes FSD and FSE: 300 mm (11.81 inches)
  - Frame size FSF: 350 mm (13.77 inches).
- Maintain the following ventilation clearances in front of the component:
  - Frame sizes FSB to FSF: 30 mm (1.18 inches)
- Do not install devices in this area that could obstruct the cooling airflow.
- Ensure that the cooling air flow of the Power Modules can flow unrestricted.

[1] The Power Modules can be mounted side by side without base components up to an ambient temperature of 40° C.
In combination with base components and at ambient temperatures of 40° C to 55° C, the specified lateral minimum clearances must be observed. Where combinations of different frame sizes are concerned, the longer of the two clearances shall apply.

4.3.3 Interface description

4.3.3.1 Overview

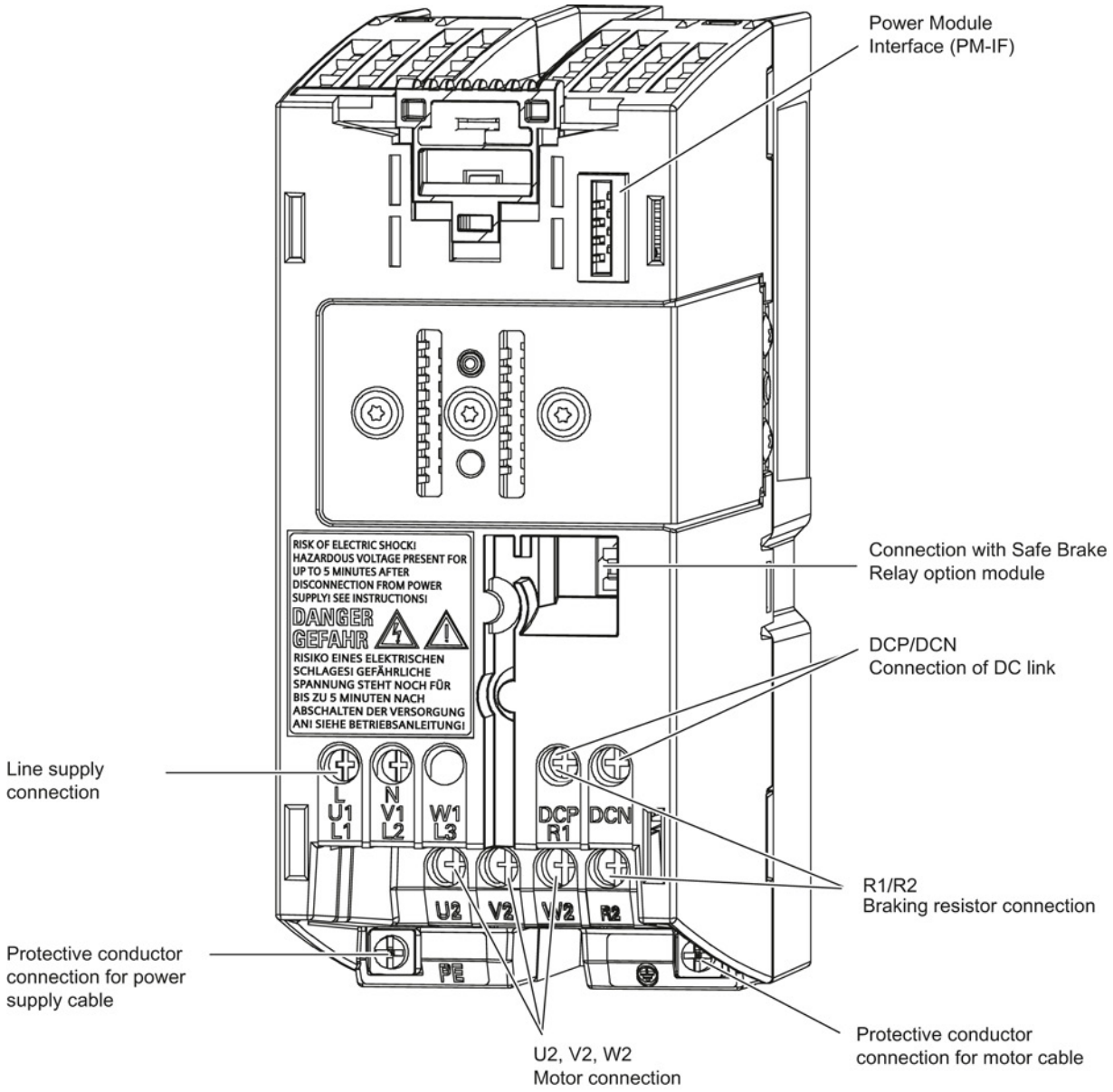

Figure 4-28 PM340, frame size FSA

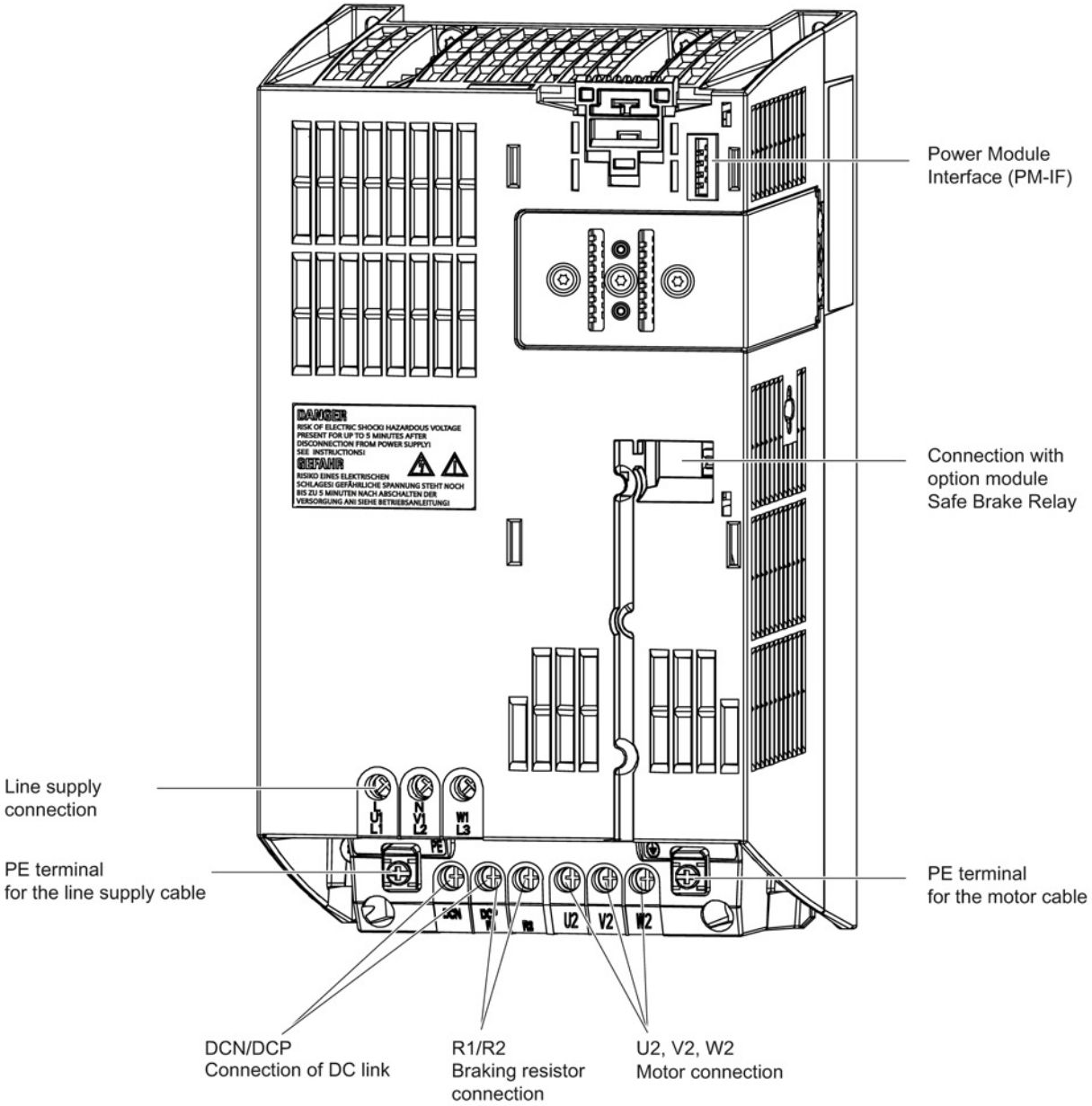

Figure 4-29 PM340, frame size FSB

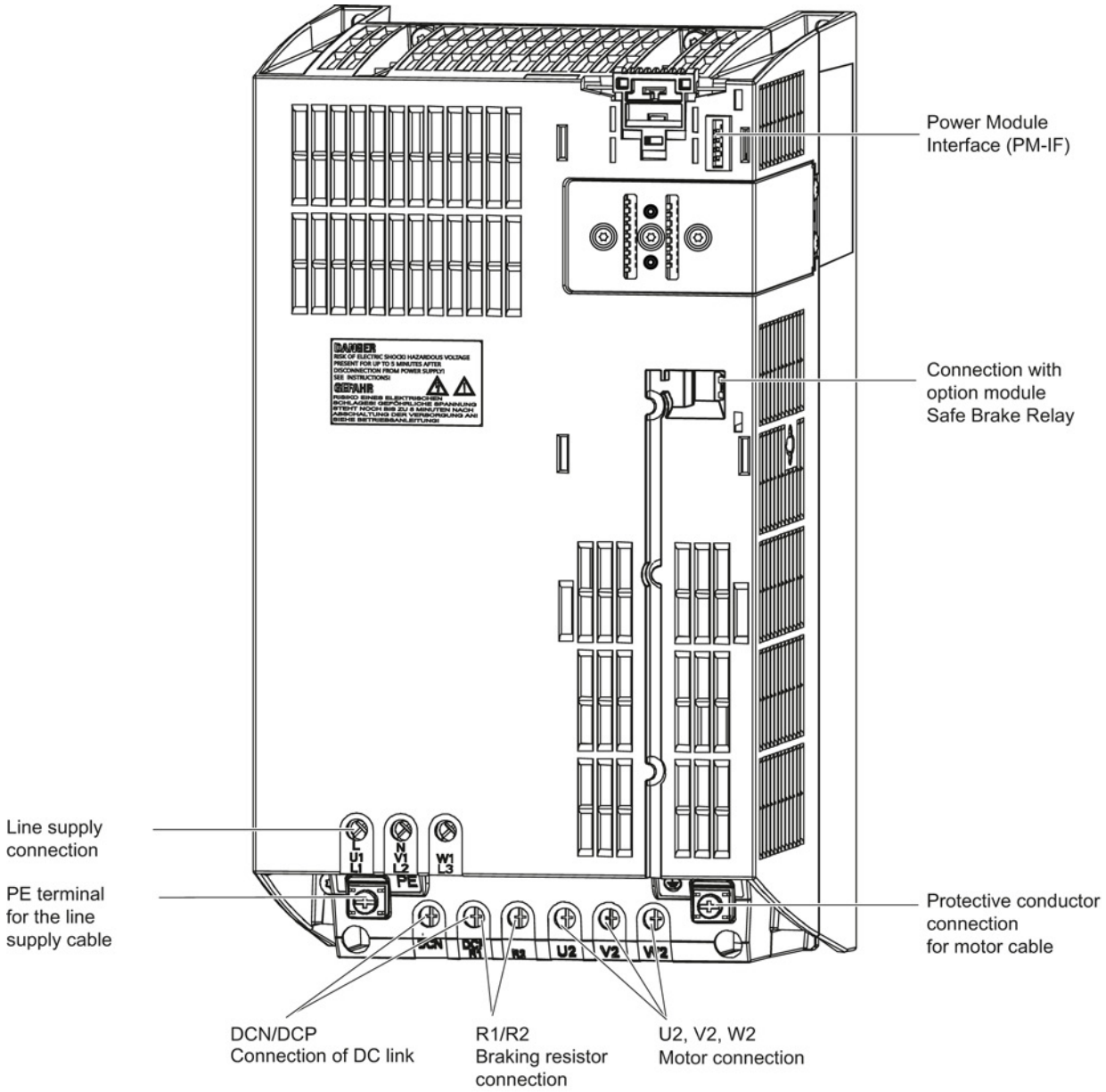

Figure 4-30 PM340, frame size FSC

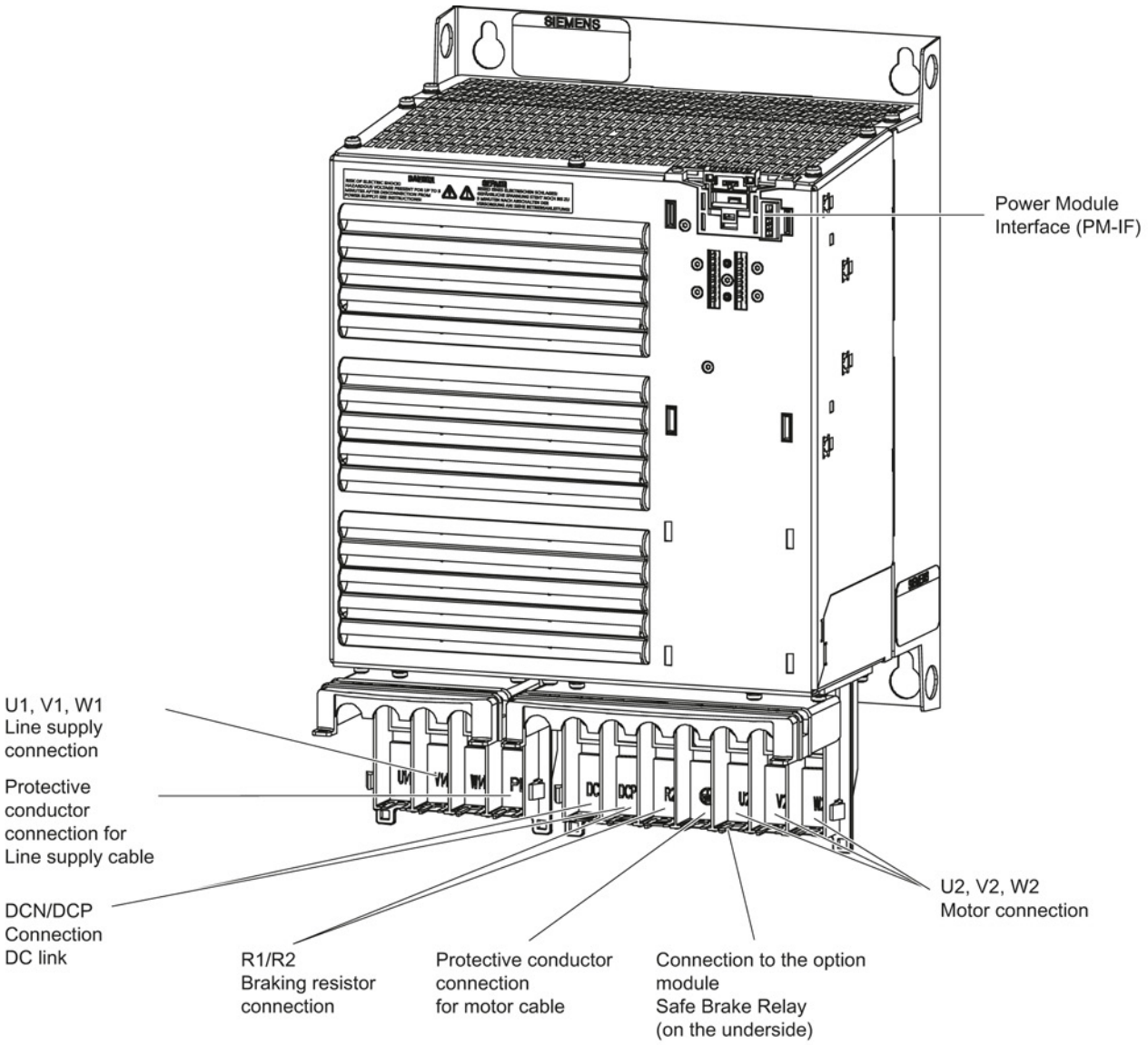

Figure 4-31 PM340, frame size FSD

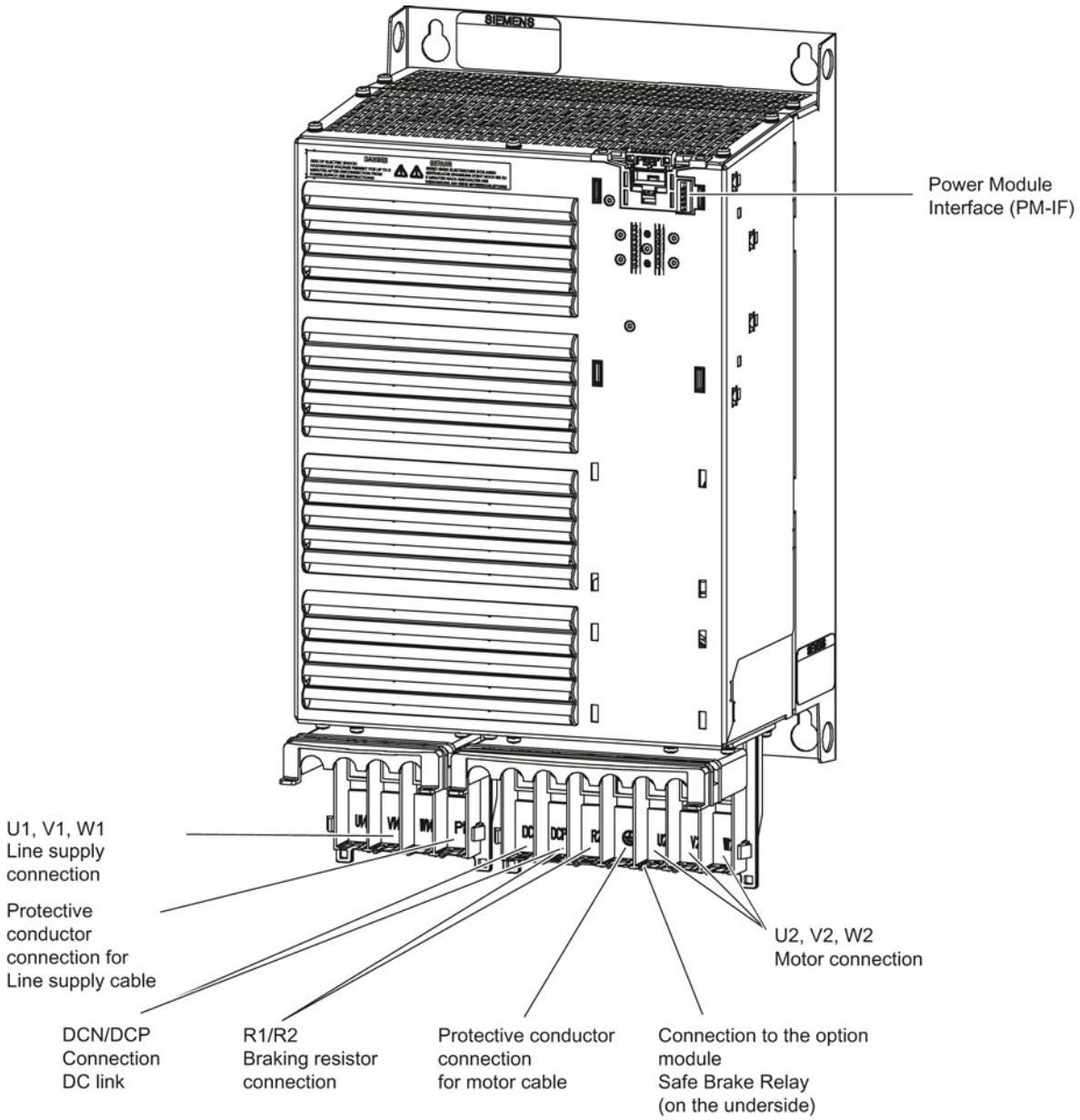

Figure 4-32 PM340, frame size FSE

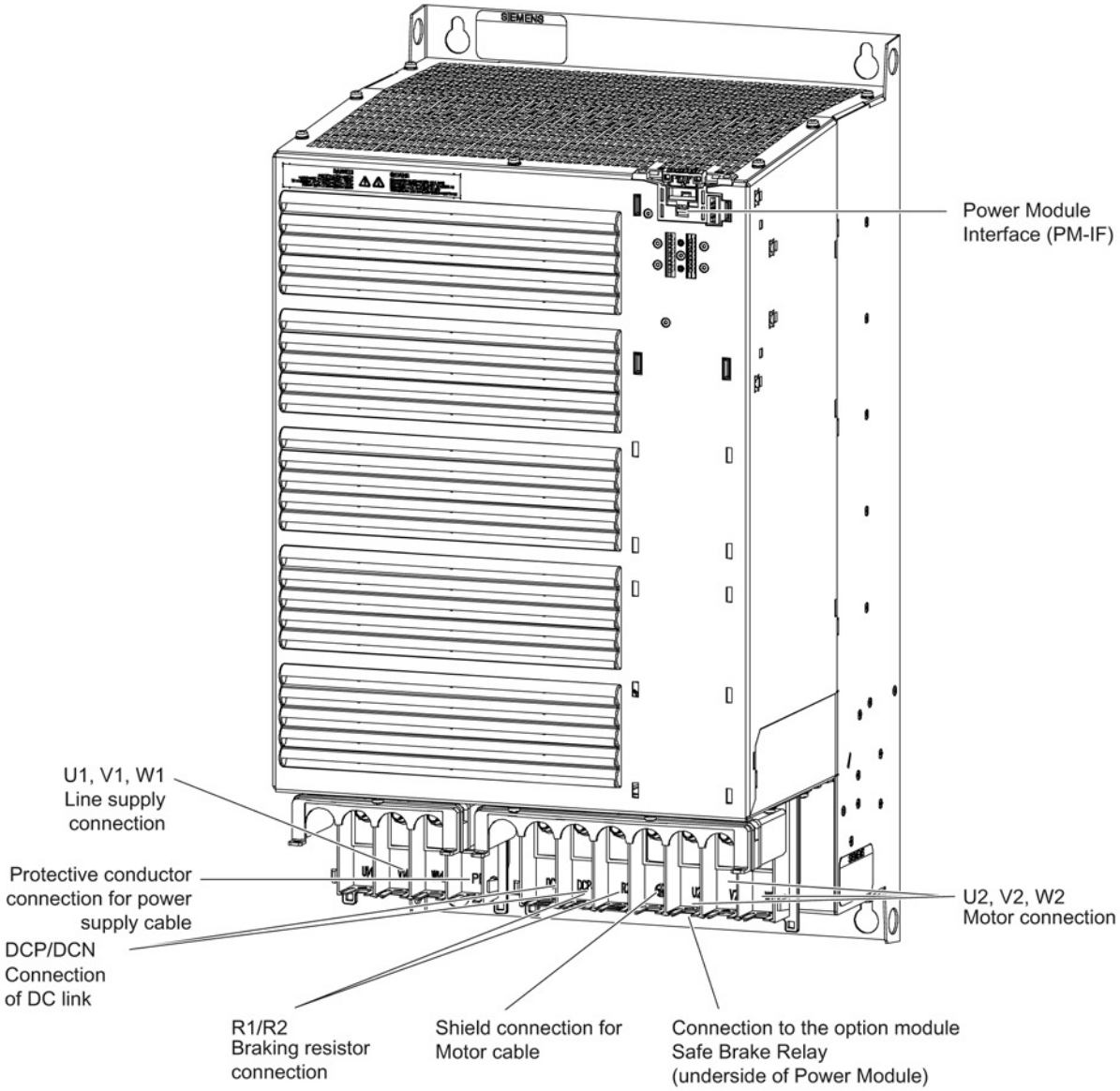

Figure 4-33 PM340, frame size FSF

4.3.3.2 Connection example

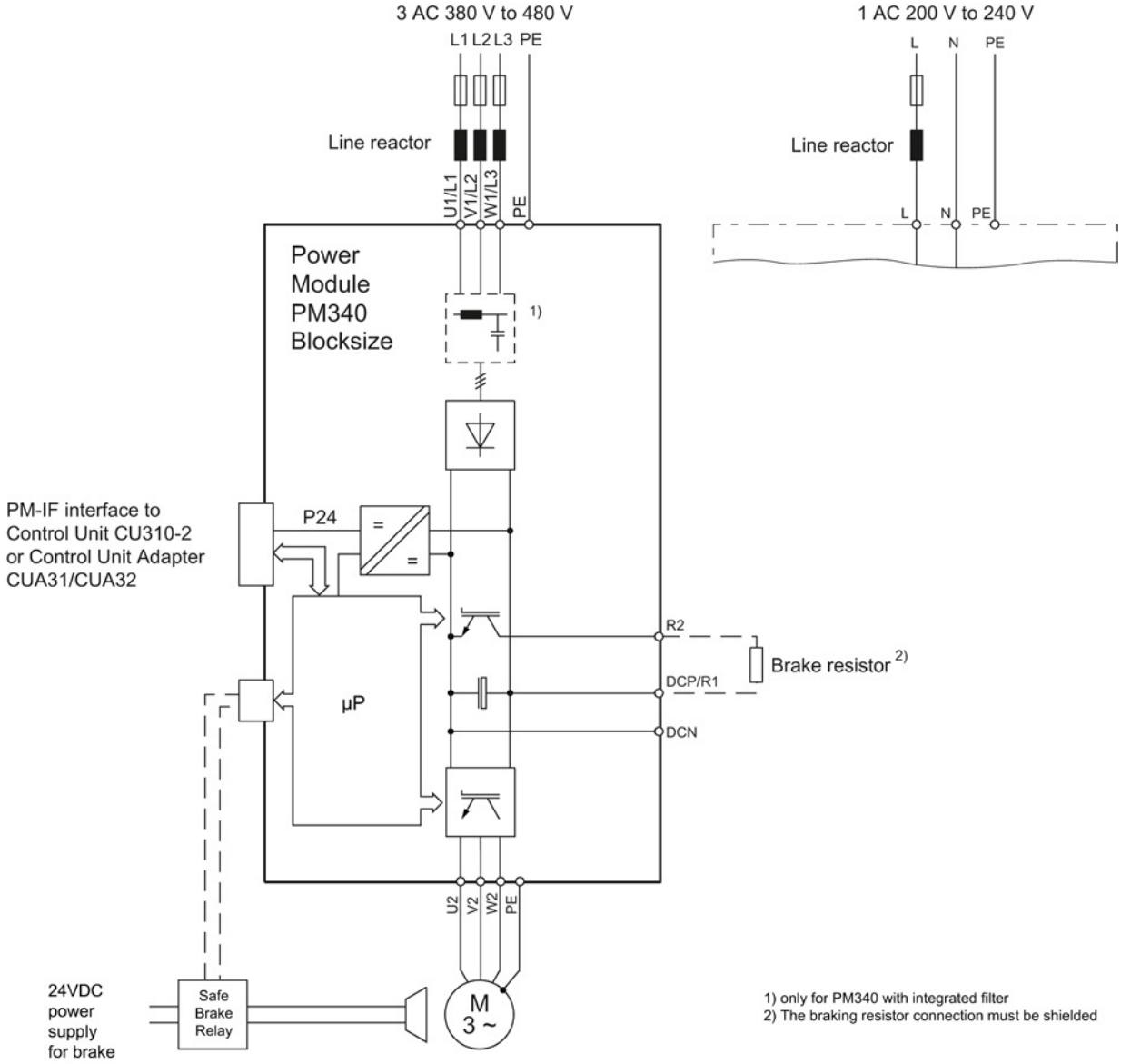

Figure 4-34 PM340 connection example

Arrangement of the line and motor terminals

The following diagram shows the arrangement of the line and motor terminals for frame sizes FSA to FSF of the PM340 Power Module.

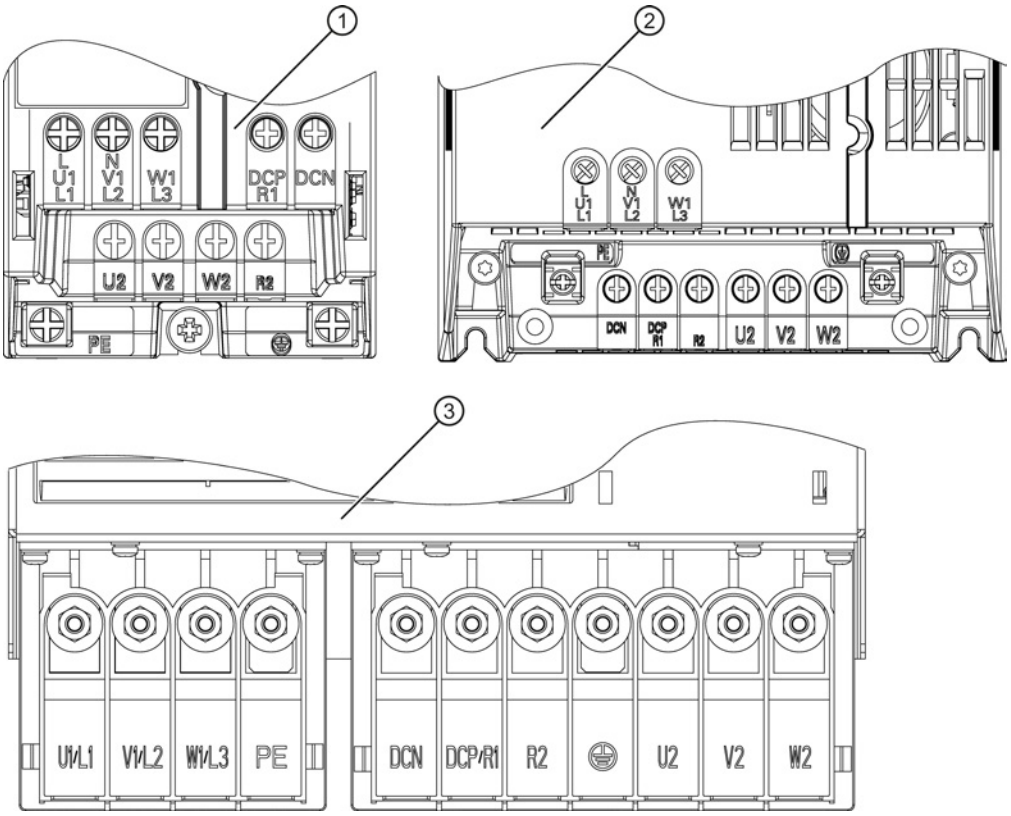

① Frame size FSA
② Frame sizes FSB/FSC
③ Frame sizes FSD/FSE/FSF

Figure 4-35 PM340: Arrangement of the line and motor terminals

4.3.3.3 Line supply connection

Table 4- 16 Terminal block, line supply connection 200 V to 240 V 1 AC

	Terminal	Signal name	Technical data
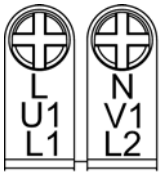	1	L	Line phase L
	2	N	Line phase N
Max. conductor cross-section: 2.5 mm²			

Table 4- 17 Terminal block, line supply connection 380 V to 480 V 3 AC

	Terminal	Signal name	Technical data
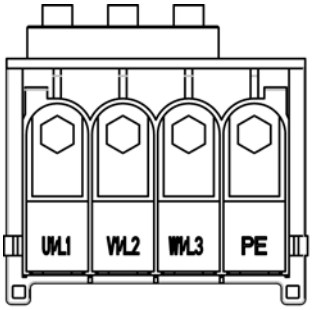	1	U1/L1	Line conductor L1
	2	V1/L2	Line conductor L2
	3	W1/L3	Line conductor L3
	4	PE	PE connection

4.3.3.4 Braking resistor and DC link connection

Table 4- 18 Terminal block, braking resistor, and DC link connection

	Terminal	Technical specifications
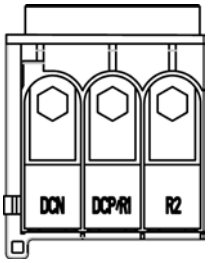	DCN	DC link negative
	DCP/R1	DC link positive and positive connection for braking resistor
	R2	Negative connection for the braking resistor

Note

To connect the cable lugs of the brake resistor cable to a PM340 Power Module frame size FSA it is necessary to nip the lug on connection R2 off using a diagonal cutter tool. Take great care to ensure that no pieces of plastic fall into the housing.

4.3.3.5 Motor connection

Table 4- 19 Terminal block, motor connection

	Terminal	Technical data
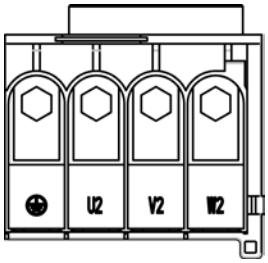	⏚	PE connection
	U2	Motor phase U
	V2	Motor phase V
	W2	Motor phase W

4.3.3.6 Safe brake relay connection

Table 4- 20 Plugs

	Terminal	Designation	Technical data
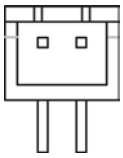	1	Low	Low-signal safe brake relay to PM340
	2	High	High-signal safe brake relay to PM340

Note

For further information, see Section Option module Safe Brake Relay (Page 378).

4.3.4 Dimension drawings

Frame sizes FSA/FSB/FSC

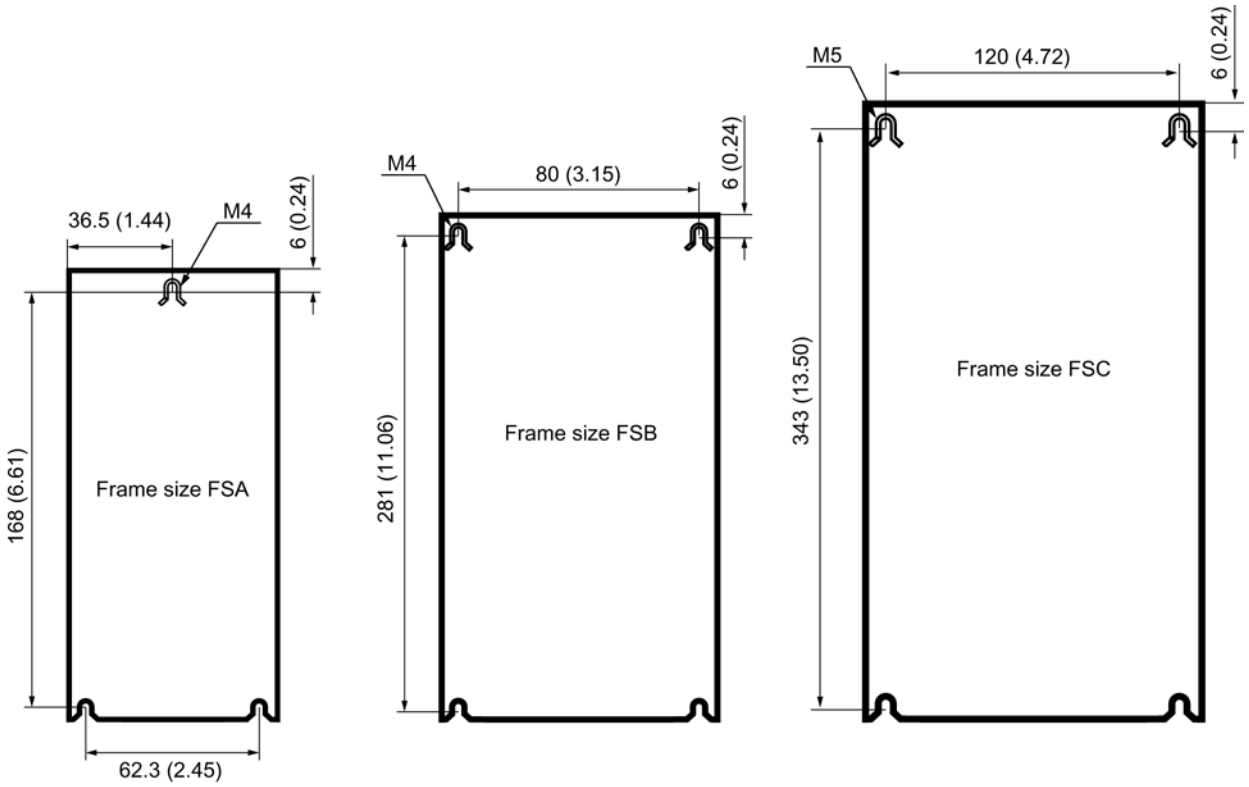

Figure 4-36 Drilling pattern, PM340 Power Modules, frame sizes FSA, FSB, FSC; all data in mm and (inches)

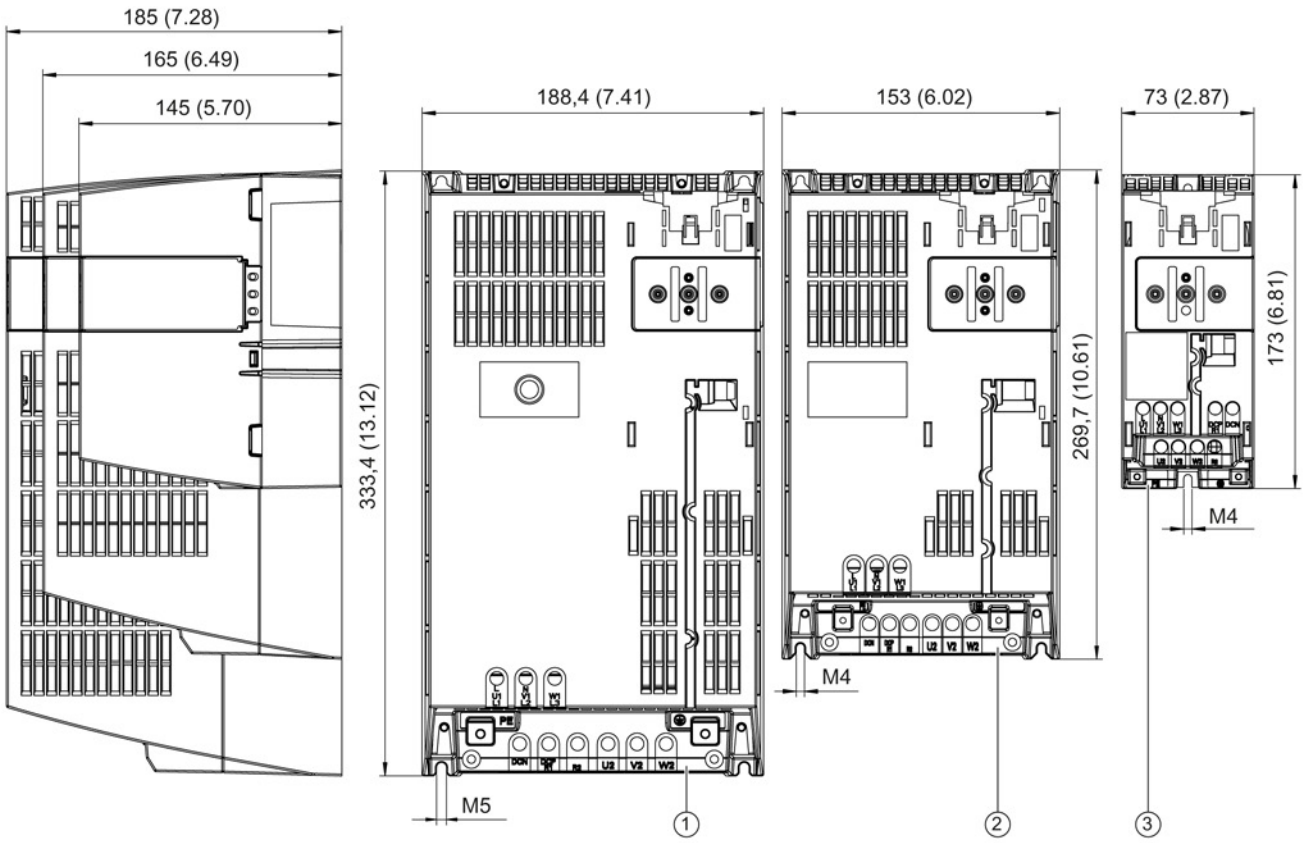

① Frame size FSC
② Frame size FSB
③ Frame size FSA

Figure 4-37 Dimension drawing, PM340 Power Modules, frame sizes FSA, FSB, FSC; all data in mm and (inches)

Frame size FSD

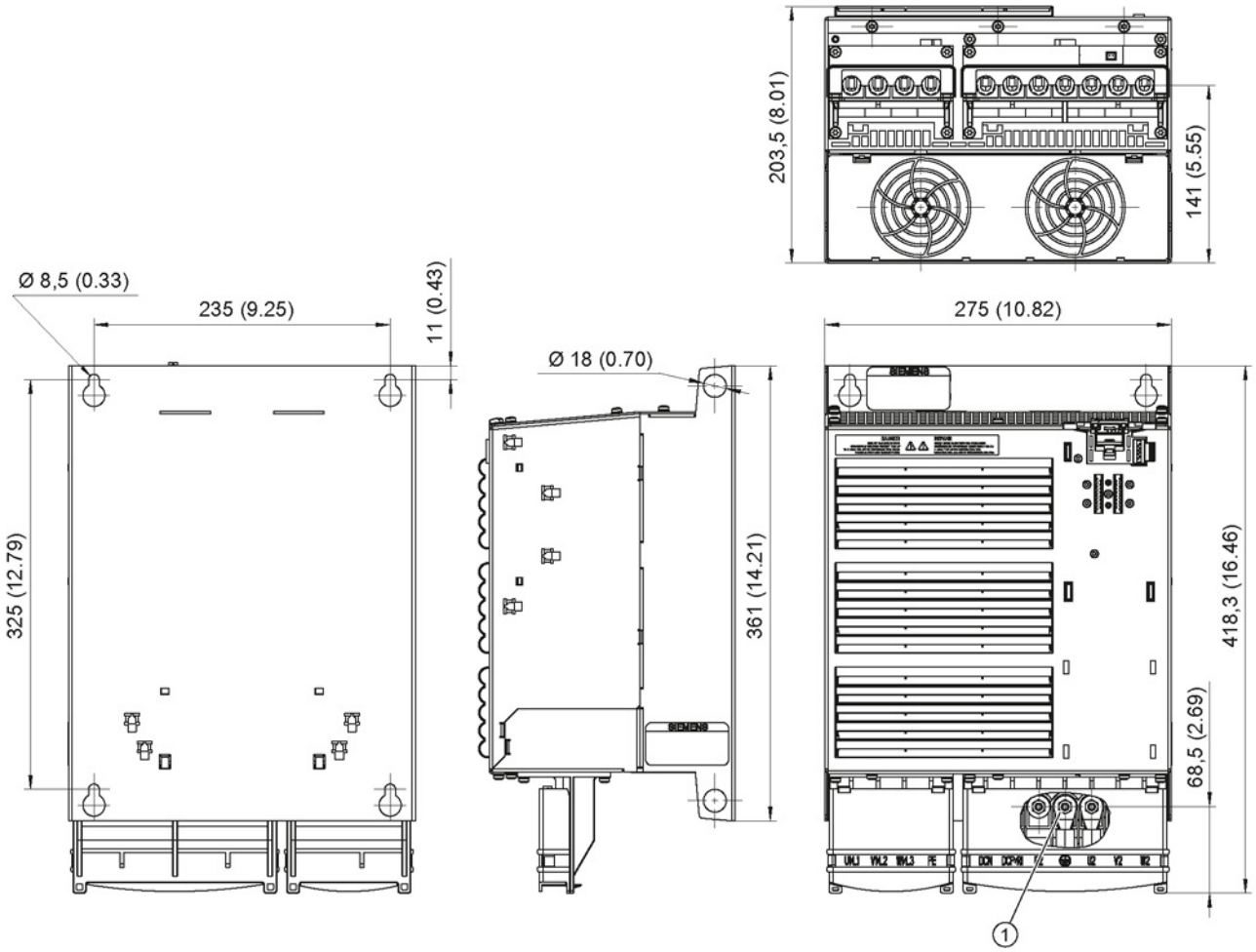

① Connections M6

Figure 4-38 Dimension drawing, PM340 Power Module, frame size FSD (without integrated line filter); all dimensions in mm and (inches)

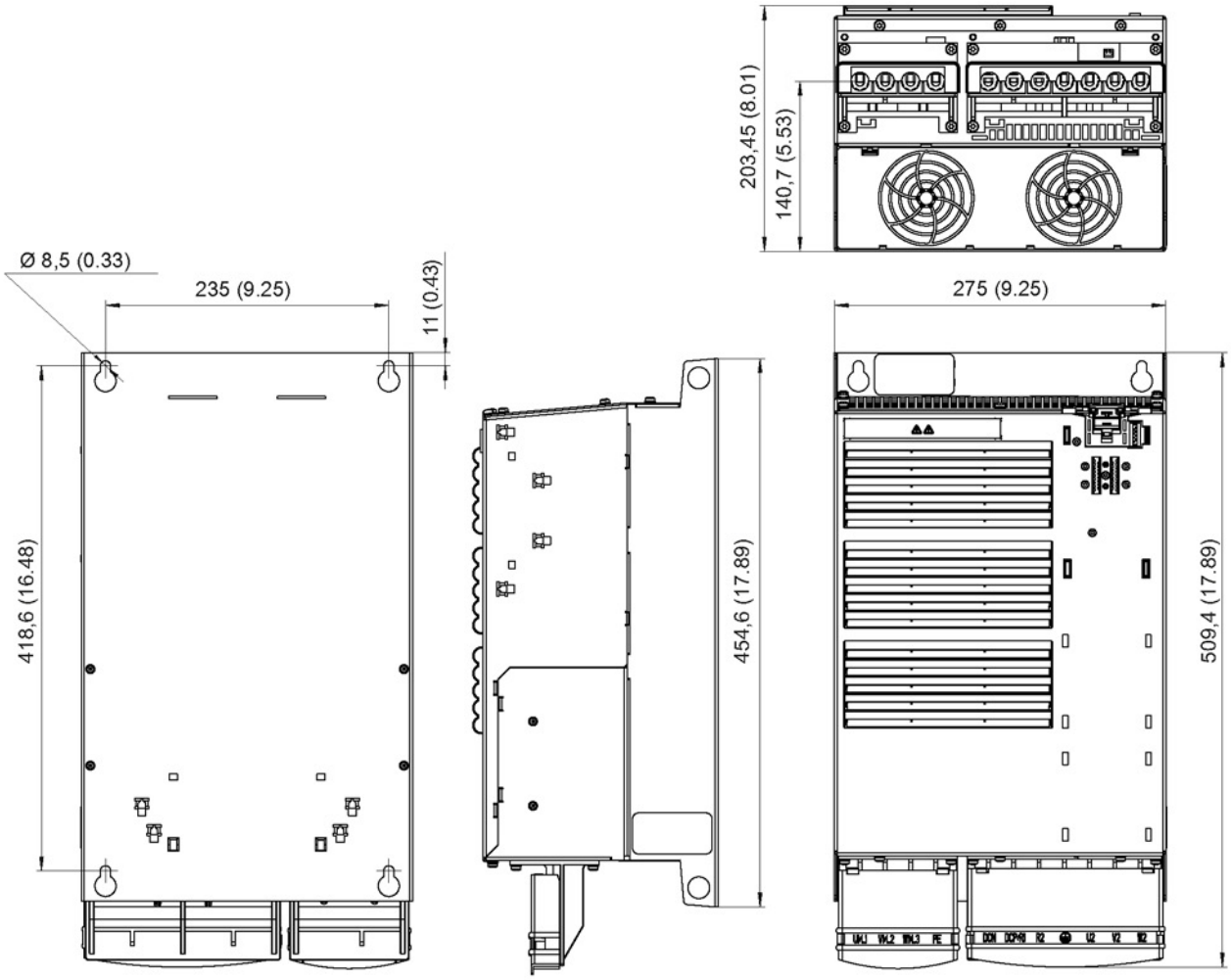

Figure 4-39 Dimension drawing, PM340 Power Module, frame size FSD (with integrated line filter); all dimensions in mm and (inches)

Frame size FSE (without/with integrated line filter)

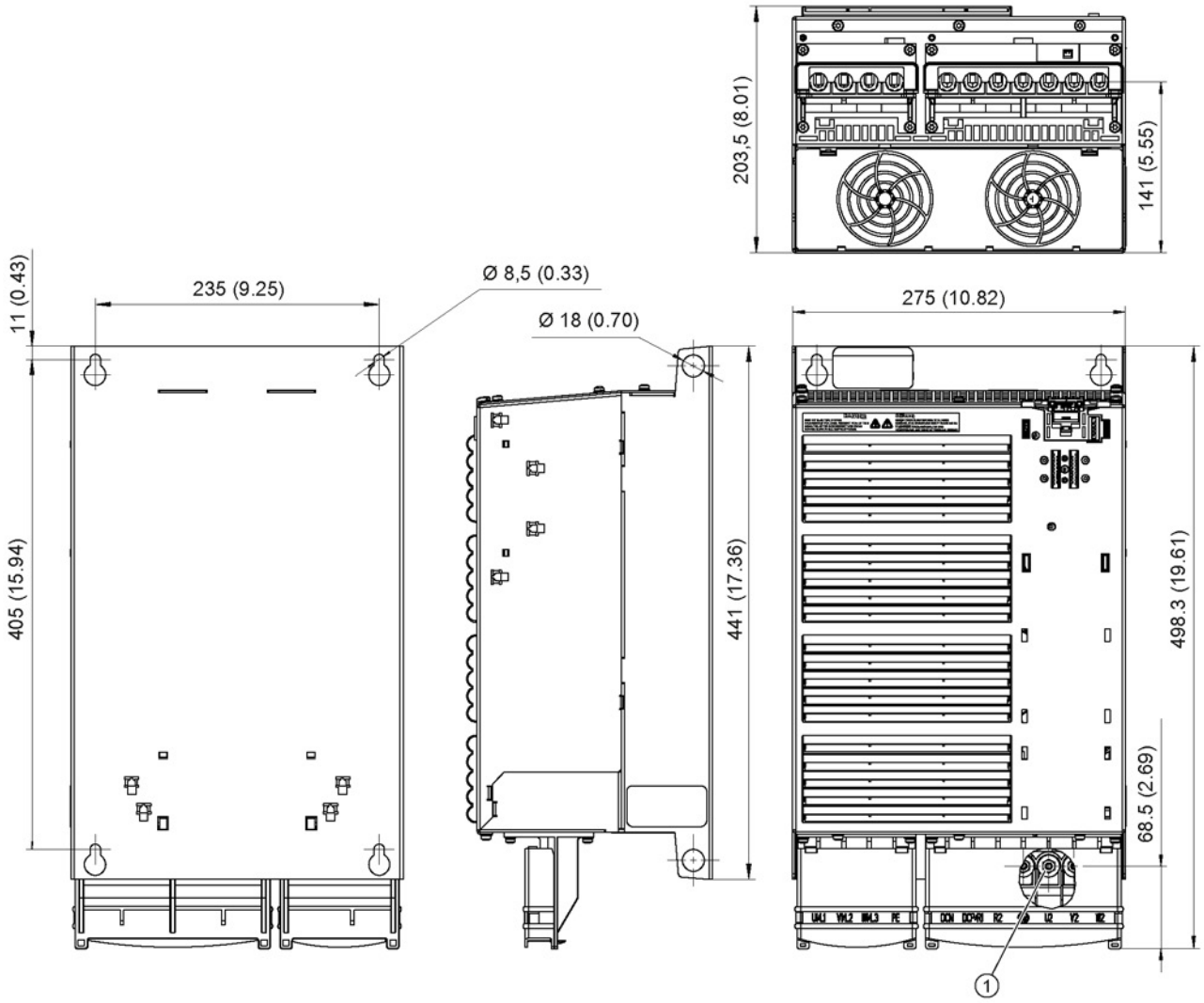

① Connections M6

Figure 4-40 Dimension drawing, PM340 Power Module, frame size FSE (without integrated line filter); all dimensions in mm and (inches)

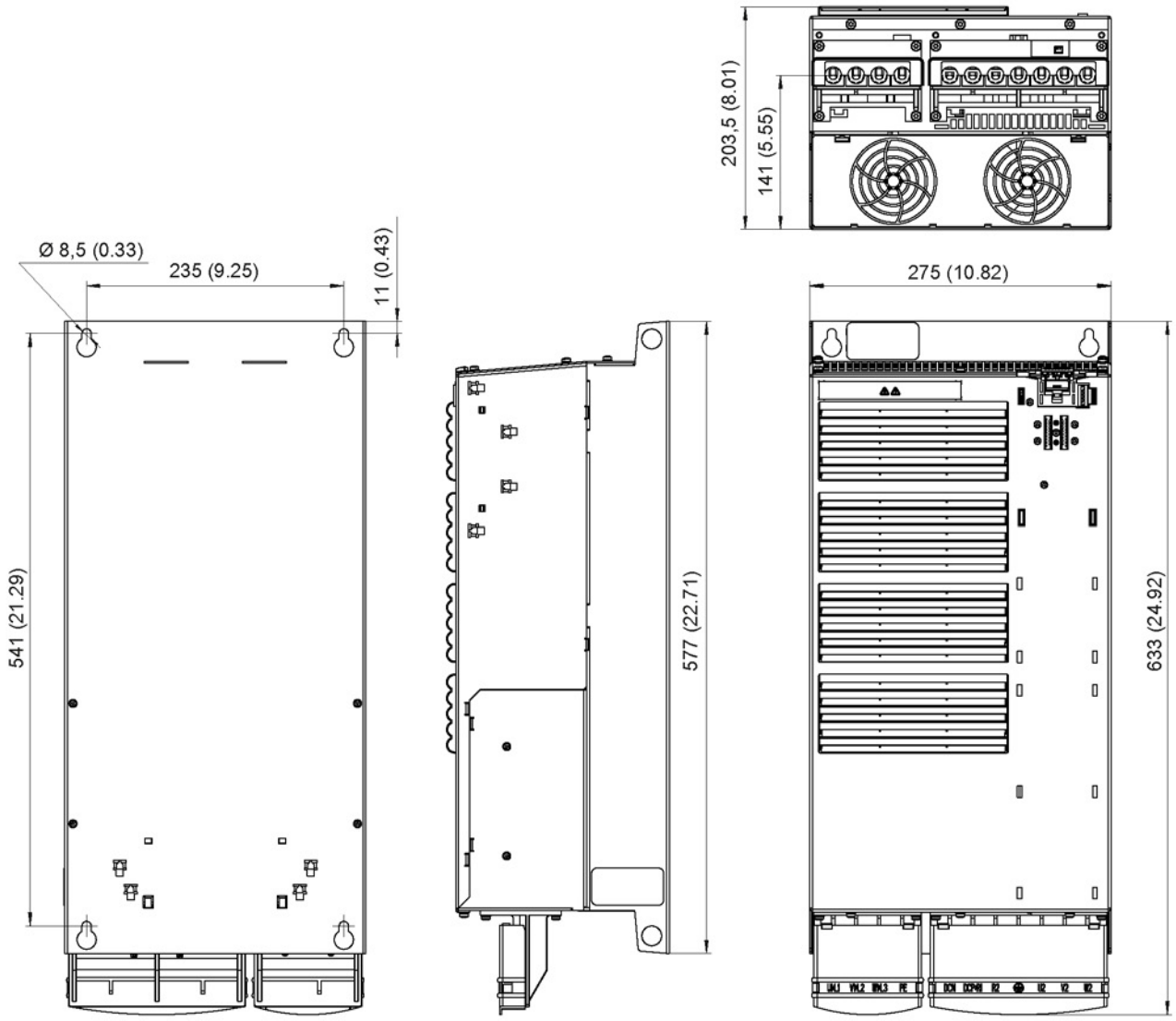

Figure 4-41 Dimension drawing, PM340 Power Module, frame size FSE (with integrated line filter); all dimensions in mm and (inches)

Frame size FSF (without/with integrated line filter)

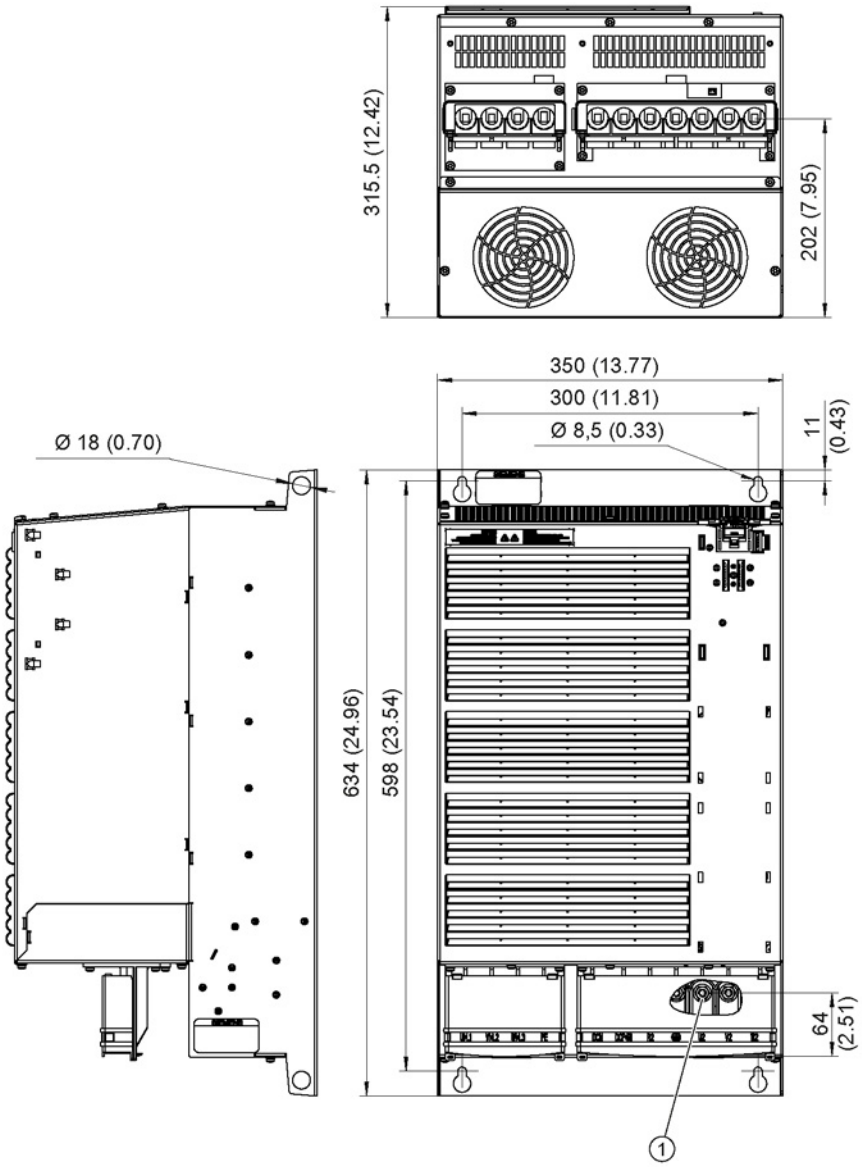

① Connections M6

Figure 4-42 Dimension drawing, PM340 Power Module, frame size FSF (without integrated line filter); all dimensions in mm and (inches)

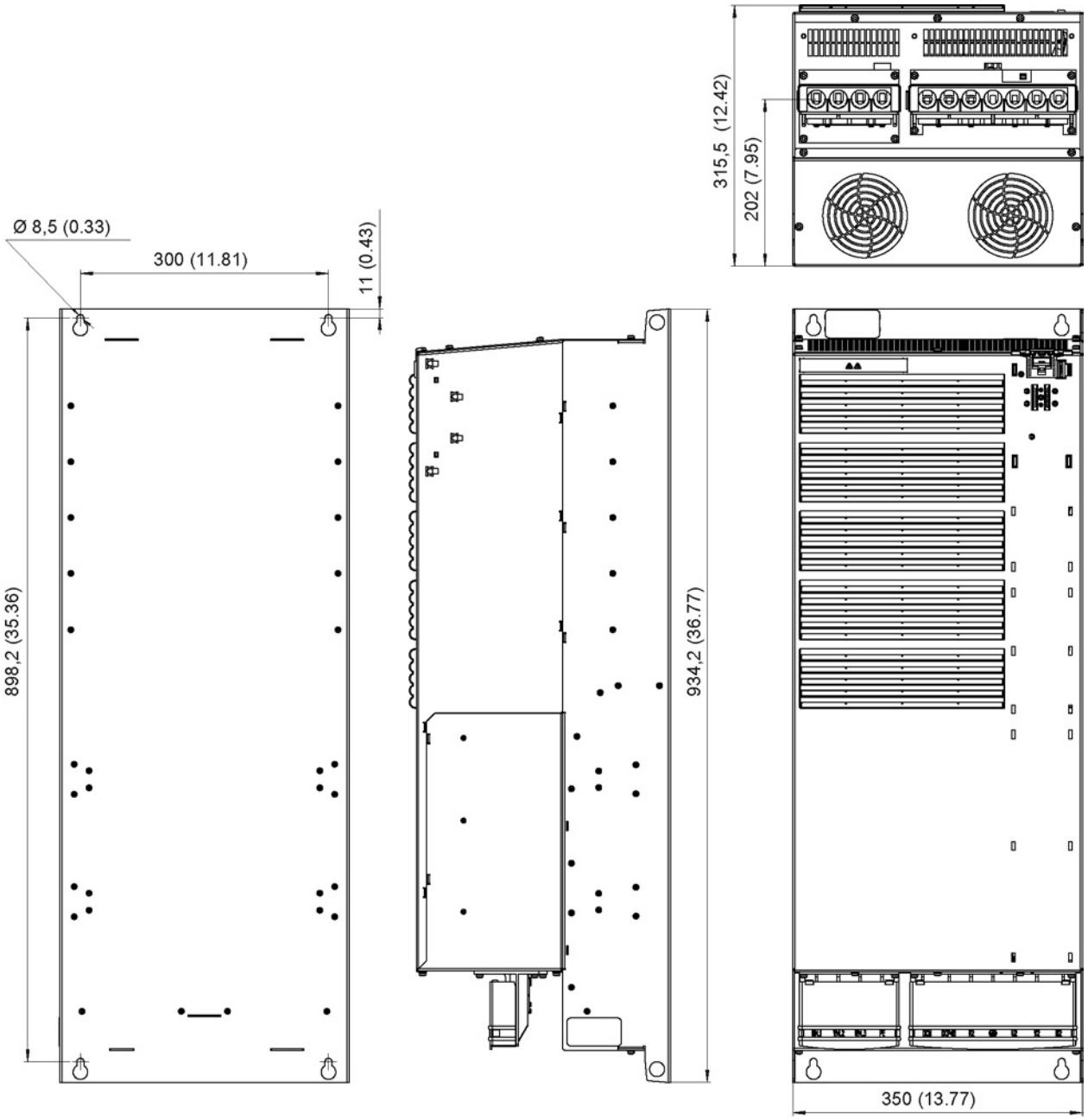

Figure 4-43 Dimension drawing, PM340 Power Module, frame size FSF (with integrated line filter); all dimensions in mm and (inches)

4.3.5 Mounting

4.3.5.1 Mounting dimensions and tightening torques

The mounting dimensions and the tightening torques for fixing the Power Modules are specified in the following table.

Table 4- 21 PM340, dimensions and tightening torques for mounting

Frame size	Height, width, depth		Dimensions (with Control Unit)	Retaining type	Tightening torques
FSA	HxWxD	mm	173 x 73 x 145	2 x M4 studs, 2 x M4 nuts, 2 x M4 washers	2.5 Nm with washers
		Inch	6.81 x 2.87 x 5.71		
FSB	HxWxD	mm	270 x 153 x 165	4 x M4 studs, 4 x M4 nuts, 4 x M4 washers	
		Inch	10.63 x 6.02 x 6.50		
FSC	HxWxD	mm	334 x 189 x 185	4 x M5 studs, 4 x M5 nuts, 4 x M5 washers	
		Inch	13.1 x 7.41 x 7.28		
FSD without line filter	HxWxD	mm	419 x 275 x 204	4 x M6 studs, 4 x M6 nuts, 4 x M6 washers	6 Nm with washers
		Inch	16.3 x 10.8 x 8.0		
FSD with integrated line filter	HxWxD	mm	512 x 275 x 204		
		Inch	20.1 x 10.8 x 8.0		
FSE without line filter	HxWxD	mm	499 x 275 x 204		
		Inch	19.6 x 10.8 x 8.0		
FSE with integrated line filter	HxWxD	mm	635 x 275 x 204		
		Inch	25 x 10.8 x 8.0		
FSF without line filter	HxWxD	mm	635 x 350 x 316	4 x M8 studs, 4 x M8 nuts, 4 x M8 washers	13 Nm with washers
		Inch	25.0 x 13.8 x 12.4		
FSF with integrated line filter	HxWxD	mm	934 x 350 x 316		
		Inch	36.8 x 13.8 x 12.4		

Table 4- 22 PM340, load terminals - Tightening torques

Frame size	Tightening torques (Nm)
FSA	1.1
FSB	1.5
FSC	2.25
FSD	6
FSE	6
FSF	13

4.3.5.2 Access to the power supply terminals and motor terminals

Access to the power supply terminals and motor terminals

The line and motor terminals are accessed by releasing the tab on the side of the terminal covers using a suitable screwdriver. The cover can then be pushed upwards and snapped into this position as shown in the following diagram.

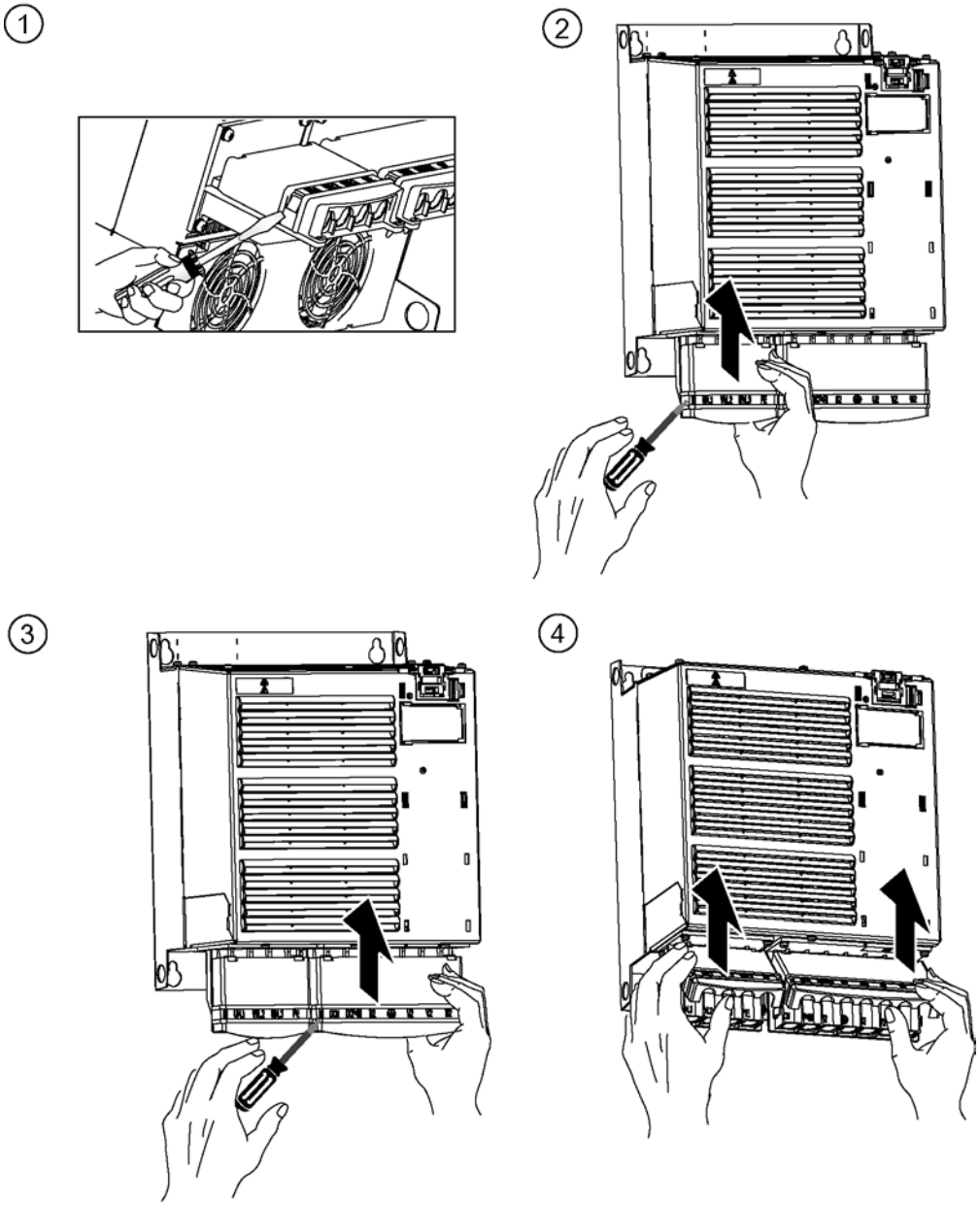

Figure 4-44 Access to the line and motor terminals for PM340 Power Modules

DANGER

Danger to life due to electric shock due to exposed terminals

Touching live components results in death or severe injury.

- Only operate the Power Module with the terminal cover closed

4.3.6 Technical data

4.3.6.1 Power Modules Blocksize, 1-ph. AC

Table 4- 23 Technical data PM340, FSA (1-phase AC)

Line voltage 1-phase 200 … 240 VAC ± 10%				
PM340	**6SL3210–**	**1SB11-0UA0**	**1SB12-3UA0**	**1SB14-0UA0**
PM340 with integrated line filter	**6SL3210–**	**1SB11-0AA0**	**1SB12-3AA0**	**1SB14-0AA0**
Output current Rated current I_n Base-load current I_H for S6 operation (40%) I_{s6} Peak current I_{max}	 A A A A	 0,9 0,8 1,4 2,0	 2,3 2,0 3,3 4,6	 3,9 3,4 5,5 7,8
Unit rating based on I_n [1)]	kW	0,12	0,37	0,75
Rated pulse frequency	kHz	4	4	4
Power loss	kW	0,06	0,075	0,11
Cooling air requirement	m^3/s	0,005	0,005	0,005
Sound pressure level LpA (1 m)	dB	< 45	< 45	< 45
24 VDC supply for the Control Unit	 A	 1,0	 1,0	 1,0
Rated input current [2)] with/without integrated line reactor	 A	 1,4 / 2,2	 4 / 6	 6,5 / 10
Class J UL fuses Rated current Short-circuit current rating SCCR	 A kA	 6 65	 10 65	 15 65
Circuit-breaker type designation EN 60947 Rated current	 A	5SJ4206-7HG41 6	5SJ4210-7HG41 10	5SJ4216-7HG41 16
Circuit-breaker type designation UL489 / CSA C22.2 No. 5-02 Rated current Rated short-circuit current SCCR	 A kA	5SJ4206-7HG41 6 14	5SJ4210-7HG41 10 14	5SJ4216-7HG41 16 14
Resistance value of the external braking resistor	Ω	> 180	> 180	> 180

Line voltage 1-phase 200 … 240 VAC ± 10%				
PM340	6SL3210–	1SB11-0UA0	1SB12-3UA0	1SB14-0UA0
PM340 with integrated line filter	6SL3210–	1SB11-0AA0	1SB12-3AA0	1SB14-0AA0
Max. cable length to braking resistor	m	15	15	15
Line supply connectionL, N		Screw terminals for cable cross-sections 1.0 to 2.5 mm^2		
Motor connection U2, V2, W2				
DC-link connection, connection for braking resistorDCP/R1, DCN, R2				
PE connection		At the housing with M4 screw		
Max. motor cable length [3] (without external options)	m	50 (shielded) 75 (unshielded)		
Degree of protection		IP20 or IPXXB		
Weight	kg	1,2	1,3	1,3

[1] Rated output of a typical standard induction motor at 230 V.

[2] The input current depends on the motor load and line impedance. The input currents apply for a load with the type rating (based on I_{rated}) for a line impedance corresponding to u_k = 1%.

[3] Max. motor cable length 15 m (shielded) for PM340 Power Modules with integrated line filter to maintain the limit values of EN 61800-3 Category C2.

4.3.6.2 Power Modules Blocksize, 3-ph. AC

Table 4- 24 Technical data of the PM340, FSA (380 V … 480 V 3 AC ±10 %)

PM340 (without integrated line filter)	6SL3210-	1SE11-3UA0	1SE11-7UA0	1SE12-2UA0	1SE13-1UA0	1SE14-1UA0
Output current Rated current I_n Base-load current I_H for S6 operation (40 %) I_{s6} Peak current I_{max}	 A A A A	 1,3 1,1 1,3 2,6	 1,7 1,5 2,0 3,4	 2,2 1,9 2,5 4,4	 3,1 2,7 3,5 6,2	 4,1 3,6 4,5 8,2
Type rating [1)] on basis of I_n on basis of I_H	 kW kW	 0,37 0,37	 0,55 0,55	 0,75 0,75	 1,1 1,1	 1,5 1,5
Rated pulse frequency	kHz	4	4	4	4	4
Power loss	kW	0,10	0,10	0,10	0,11	0,11
Cooling air requirement	m^3/s	0,005	0,005	0,005	0,005	0,005
Sound pressure level L_{pA} (1 m)	dB(A)	< 45	< 45	< 45	< 45	< 45
24 V DC supply for the Control Unit	 A	 1,0	 1,0	 1,0	 1,0	 1,0
Rated input current [2)] with/without integrated line reactor	 A	 1,3 / 1,7	 1,7 / 2,2	 2,2 / 2,6	 3,1 / 3,9	 4,1 / 4,8
UL fuses **Class J** Rated current Short-circuit current rating SCCR	 A kA	 4 65	 4 65	 6 65	 8 65	 10 65
NH fuses **IEC 60947** Rated current	 A	3NA3804 4	3NA3804 4	3NA3801 6	3NA3803 10	3NA3803 10
Circuit-breaker type designation IEC 60947 rated current	 A	3RV2011-1DA10 2.2 … 3.2	3RV2011-1DA10 2.2 … 3.2	3RV2011-1FA10 3.5 … 5	3RV2011-1GA10 4.5 … 6.3	3RV2011-1HA10 5.5 … 8
Resistance value ext. braking resistor	Ω	> 390	> 390	> 390	> 390	> 390
Max. cable length to braking resistor	m	15	15	15	15	15
Line supply connection L1, L2, L3		Screw terminals for cable cross-sections 1.0 … 2.5 mm^2				
Motor connection U2, V2, W2						
DC link connection, connection for braking resistor DCP/R1, DCN, R2						

PM340 (without integrated line filter)	6SL3210-	1SE11-3UA0	1SE11-7UA0	1SE12-2UA0	1SE13-1UA0	1SE14-1UA0
PE connection		At the housing with M4 screw				
Max. motor cable length[3] shielded/unshielded	m	50 / 75				
Degree of protection		IP20 or IPXXB				
Weight	kg	1,2	1,2	1,2	1,2	1,2

1) Rated power of a typical standard induction motor at 400 V 3 AC

2) The input current depends on the motor load and line impedance. The input currents apply for a load with the type rating (based on I_{rated}) for a line impedance corresponding to u_k = 1%.

3) Max. motor cable length 25 m (shielded) for PM340 Power Modules with integrated line filter to maintain the limit values of EN 61800-3 Category C2.

Table 4- 25 Technical data of the PM340, FSB (380 V ... 480 V 3 AC ±10 %)

PM340	6SL3210-	1SE16-0UA0	1SE17-7UA0	1SE21-0UA0
PM340 with integrated line filter	6SL3210-	1SE16-0AA0	1SE17-7AA0	1SE21-0AA0
Output current Rated current I_n Base-load current I_H for S6 operation (40 %) I_{S6} Peak current I_{max}	 A A A A	 5,9 5,2 6,4 11,8	 7,7 6,8 8,3 15,4	 10,2 9,1 10,8 20,4
Type rating [1] on basis of I_n on basis of I_H	 kW kW	 2,2 2,2	 3 3	 4 4
Rated pulse frequency	kHz	4	4	4
Power loss	kW	0,14	0,16	0,18
Cooling air requirement	m^3/s	0,009	0,009	0,009
Sound pressure level L_{pA} (1 m)	dB	< 50	< 50	< 50
24 V DC supply for the Control Unit	 A	 1,0	 1,0	 1,0
Rated input current [2] with/without integrated line reactor	 A	 5,6 / 6,7	 7,5 / 8,9	 9,8 / 12,4
Class J UL fuses Rated current Short-circuit current rating SCCR	 A kA	 10 65	 12 65	 15 65
NH fuses IEC 60947 Rated current	 A	3NA3803 10	3NA3805 16	3NA3805 16
Circuit breaker type designation IEC 60947 rated current	 A	3RV2011-1KA10 9 … 12.5	3RV2011-4AA10 11 … 16	3RV2021-4BA10 14 … 20
Resistance value ext. braking resistor	Ω	> 160	> 160	> 160

PM340	6SL3210-	1SE16-0UA0	1SE17-7UA0	1SE21-0UA0
PM340 with integrated line filter	6SL3210-	1SE16-0AA0	1SE17-7AA0	1SE21-0AA0
Max. cable length to braking resistor	m	15	15	15
Line supply connection L1, L2, L3		Screw terminals for cable cross-sections 1.0 … 6 mm²		
Motor connection U2, V2, W2				
DC link connection, connection for braking resistor DCP/R1, DCN, R2				
PE connection		On housing with M5 screw		
Max. motor cable length[3)] shielded/unshielded	m	50 / 75		
Degree of protection		IP20 or IPXXB		
Weight	kg	4,0	4,0	4,0

1) Rated power of a typical standard induction motor at 400 V 3 AC

2) The input current depends on the motor load and line impedance. The input currents apply for a load with the type rating (based on I_{rated}) for a line impedance corresponding to u_k = 1%.

3) Max. motor cable length 25 m (shielded) for PM340 Power Modules with integrated line filter to maintain the limit values of EN 61800-3 Category C2.

Table 4- 26 Technical data of the PM340, FSC (380 V ... 480 V 3 AC ±10 %)

PM340	6SL3210-	1SE21-8UA0	1SE22-5UA0	1SE23-2UA0
PM340 with integrated line filter	6SL3210-	1SE21-8AA0	1SE22-5AA0	1SE23-2AA0
Output current Rated current I_n Base-load current I_H for S6 operation (40 %) I_{s6} Peak current I_{max}	 A A A A	 18 14 19,6 26,4	 25 21 27,8 38	 32 27 37,1 52
Type rating [1)] on basis of I_n on basis of I_H	 kW kW	 7,5 5,5	 11 7,5	 15 11
Rated pulse frequency	kHz	4	4	4
Power loss	kW	0,24	0,30	0,40
Cooling air requirement	m³/s	0,038	0,038	0,038
Sound pressure level L_{pA} (1 m)	dB	< 60	< 60	< 60
24 V DC supply for the Control Unit	A	1,0	1,0	1,0
Rated input current [2)] with/without integrated line reactor	A	17,1 / 23,1	24,6 / 32,6	33 / 39
Class J UL fuses Rated current Short-circuit current rating SCCR	 A kA	 25 65	 35 65	 45 65

PM340	6SL3210-	1SE21-8UA0	1SE22-5UA0	1SE23-2UA0
PM340 with integrated line filter	6SL3210-	1SE21-8AA0	1SE22-5AA0	1SE23-2AA0
NH fuses IEC 60947 Rated current	 A	3NA3810 25	3NA3814 35	3NA3817 40
Circuit breaker type designation IEC 60947 Rated current	 A	3RV1031-4EA10 22 … 32	3RV1031-4FA10 28 … 40	3RV1031-4HA10 40 … 50
Resistance value ext. braking resistor	Ω	> 56	> 56	> 56
Max. cable length to braking resistor	m	15	15	15
Line supply connection L1, L2, L3		Screw terminals for cable cross-section 2.5 … 10 mm²		
Motor connection U2, V2, W2				
DC link connection, connection for braking resistor DCP/R1, DCN, R2				
PE connection		On housing with M5 screw		
Max. motor cable length[3)] shielded/unshielded	m	50 / 75		
Degree of protection		IP20 or IPXXB		
Weight	kg	6,5	6,5	6,5

1) Rated power of a typical standard induction motor at 400 V 3 AC

2) The input current depends on the motor load and line impedance. The input currents apply for a load with the type rating (based on I_{rated}) for a line impedance corresponding to u_k = 1%.

3) Max. motor cable length 25 m (shielded) for PM340 Power Modules with integrated line filter to maintain the limit values of EN 61800-3 Category C2.

Table 4- 27 Technical data PM340, FSD (3 AC 380 V to 480 V ±10 %)

PM340	6SL3210-	1SE23-8UA0	1SE24-5UA0	1SE26-0UA0
PM340 with integrated line filter	6SL3210-	1SE23-8AA0	1SE24-5AA0	1SE26-0AA0
Output current Rated current I_n Base-load current I_H for S6 operation (40 %) I_{s6} Peak current I_{max}	 A A A A	 38 33 49 64	 45 40 58 76	 60 48 78 90
Type rating [1)] on basis of I_n on basis of I_H	 kW kW	 18,5 15	 22 18,5	 30 22
Rated pulse frequency	kHz	4	4	4
Power loss	kW	0,38	0,51	0,69
Cooling air requirement	m³/s	0,022	0,022	0,039
Sound pressure level L_{pA} (1 m)	dB(A)	< 60	< 60	< 60

PM340	6SL3210-	1SE23-8UA0	1SE24-5UA0	1SE26-0UA0
PM340 with integrated line filter	6SL3210-	1SE23-8AA0	1SE24-5AA0	1SE26-0AA0
24 V DC supply for the Control Unit	A	1,0	1,0	1,0
Rated input current [2] with/without integrated line reactor	A	40 / 46	47 / 53	63 / 72
Class J UL fuses Rated current Short-circuit current rating SCCR	 A kA	3NE1817-0 50 65	3NE1818-0 60 65	3NE1820-0 90 65
NH fuses **IEC 60947** Rated current	A	3NA3820 50	3NA3822 63	3NA3824 80
Circuit-breaker type designation IEC 60947 rated current	A	3RV1042-4JA10 45 … 63	3RV1042-4KA10 57 … 75	3RV1042-4MA10 80 … 100
Resistance value of the external braking resistor	Ω	> 27	> 27	> 27
Max. cable length to braking resistor	m	15	15	15
Line supply connection L1, L2, L3		Stud M6, connectable cable cross-sections 10 ... 50 mm²		
Motor connection U2, V2, W2				
DC link connection, connection for braking resistor DCP/R1, DCN, R2				
PE connection		At the housing with M6 screw		
Max. motor cable length[3] shielded/unshielded	m	70 / 100		
Degree of protection		IP20 or IPXXB		
Height PM340 with/without integrated line filter	mm (inch)	418,3 (16.47) / 511 (20.11)	418,3 (16.47) / 511 (20.11)	418,3 (16.47) / 511 (20.11)
Weight with/without integrated line filter	kg	15,9 / 19,3	15,9 / 19,3	15,9 / 19,3

1) Rated power of a typical standard induction motor at 400 V 3 AC

2) The input current depends on the motor load and line impedance. The input currents apply for a load with the type rating (based on I_{rated}) for a line impedance corresponding to u_k = 1%.

3) Max. motor cable length 25 m (shielded) for PM340 Power Modules with integrated line filter to maintain the limit values of EN 61800-3 Category C2.

Table 4- 28 Technical data PM340, FSE and FSF (3 AC 380 V to 480 V ±10 %)

PM340	6SL3210-	1SE27-5UA0	1SE31-0UA0	1SE31-1UA0	1SE31-5UA0	1SE31-8UA0
PM340 with integrated line filter	6SL3210-	1SE27-5AA0	1SE31-0AA0	1SE31-1AA0	1SE31-5AA0	1SE31-8AA0
Frame size		FSE	FSE	FSF	FSF	FSF
Output current Rated current I_n Base-load current I_H for S6 operation (40 %) I_{s6} Peak current I_{max}	 A A A A	 75 65 98 124	 90 80 117 150	 110 95 143 180	 145 115 188 220	 178 155 231 290
Type rating [1)] on basis of I_n on basis of I_H	 kW kW	 37 30	 45 37	 55 45	 75 55	 90 75
Rated pulse frequency	kHz	4	4	4	4	4
Power loss	kW	0,99	1,21	1,42	1,93	2,31
Cooling air requirement	m^3/s	0,022	0,039	0,094	0,094	0,117
Sound pressure level L_{pA} (1 m)	dB	< 60	62	< 60	< 60	65
24 V DC supply for the Control Unit	 A	 1,0	 1,0	 1,0	 1,0	 1,0
Rated input current [2)] with/without integrated line reactor	 A	 78 / 88	 94 / 105	 115 / 129	 151 / 168	 186 / 204
UL fuses Class J Rated current Short-circuit current rating SCCR	 A kA	3NE1021-0 100 65	3NE1022-0 125 65	3NE1224-0 150 65	3NE1225-0 200 65	3NE1227-0 250 65
NH fuses IEC 60947 Rated current	 A	3NA3830 100	3NA3832 125	3NA3836 160	3NA3140 200	3NA3144 250
Circuit breaker type designation IEC 60947 Rated current	 A	3VL1712-1DD33-0AA0 100 … 125	3VL1716-1DD33-0AA0 125 … 160	3VL3720-1DC36-0AA0 160 … 200	3VL3720-1DC36-0AA0 160 … 200	3VL3725-1DC36-0AA0 200 … 250
Resistance value of the external braking resistor	Ω	> 15		> 8,2		
Max. cable length to braking resistor	m	15				
Line supply connection L1, L2, L3		Stud M6, connectable cable cross-sections 10 ... 50 mm^2		Stud M8, max. connectable cable cross-section 120 mm^2		
Motor connection U2, V2, W2						
DC link connection, connection for braking resistor DCP/R1, DCN, R2						

PM340	6SL3210-	1SE27-5UA0	1SE31-0UA0	1SE31-1UA0	1SE31-5UA0	1SE31-8UA0
PM340 with integrated line filter	6SL3210-	1SE27-5AA0	1SE31-0AA0	1SE31-1AA0	1SE31-5AA0	1SE31-8AA0
PE connection		At the housing with M6 screw		At the housing with M8 screw		
Max. motor cable length[3] shielded/unshielded	m	70 / 100				
Degree of protection		IP20 or IPXXB				
Height PM340 with/without integrated line filter	mm (inch)	498,3 (19.62) / 633 (24.92)		634 (24.96) / 934 (36.77)		
Weight with/without integrated line filter	kg	19,8 / 27,1		50,7 / 66,7		

1) Rated power of a typical standard induction motor at 400 V 3 AC

2) The input current depends on the motor load and line impedance. The input currents apply for a load with the type rating (based on I_{rated}) for a line impedance corresponding to u_k = 1%.

3) Max. motor cable length 25 m (shielded) for PM340 Power Modules with integrated line filter to maintain the limit values of EN 61800-3 Category C2.

4.3.6.3 Characteristics

Overload capability

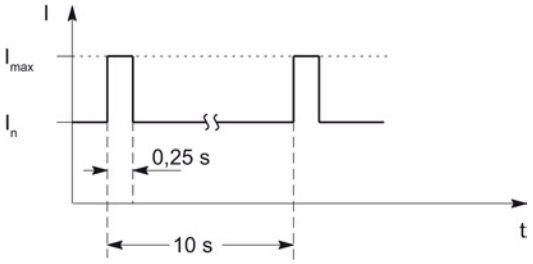

Figure 4-45 Duty cycle with initial load (for servo drives)

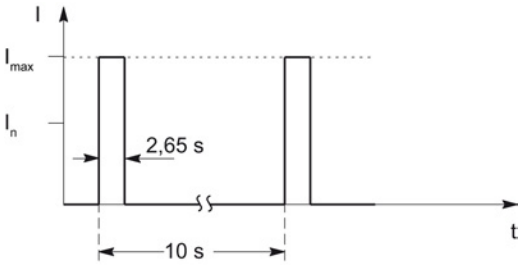

Figure 4-46 Duty cycle without initial load (for servo drives)

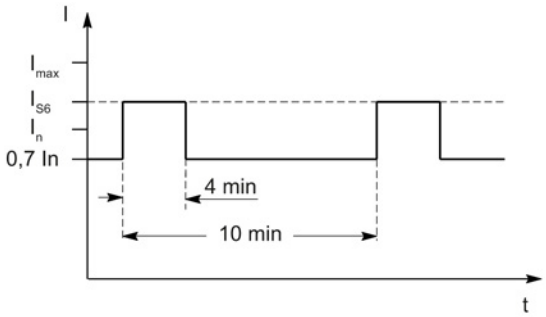

Figure 4-47 S6 duty cycle with initial load (for servo drives)

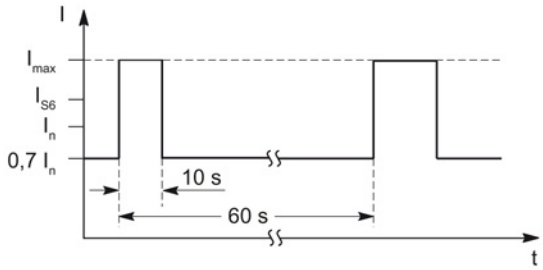

Figure 4-48 Duty cycle with initial load (for servo drives)

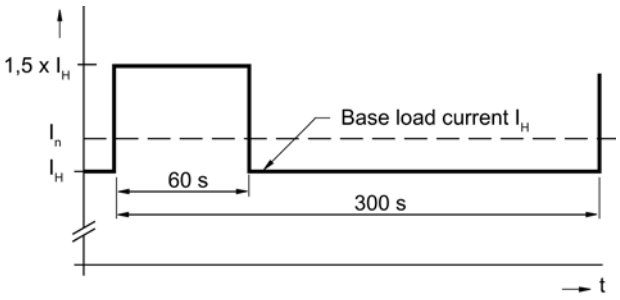

Figure 4-49 Duty cycle with 60 s overload with a duty cycle duration of 300 s

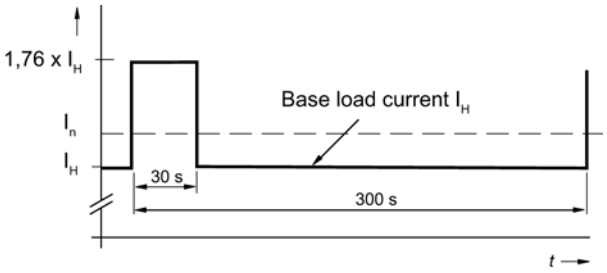

Figure 4-50 Duty cycle with 30 s overload with a duty cycle duration of 300 s

Note

The short leading edges of the duty cycles shown can only be achieved using speed or torque control.

Derating characteristics for PM340 Power Modules in Blocksize format

For further information, see Section Derating as a function of the ambient temperature, pulse frequency, and installation altitude (Page 37).

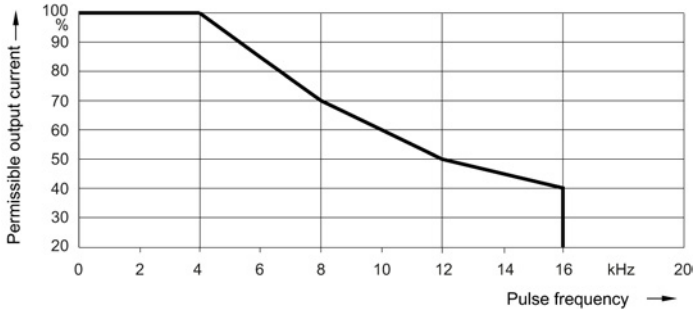

Figure 4-51 Frame sizes FSA to FSE: Output current as a function of the pulse frequency

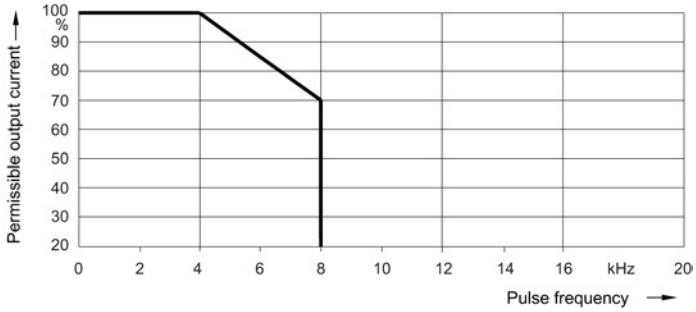

Figure 4-52 Frame size FSF: Output current as a function of the pulse frequency

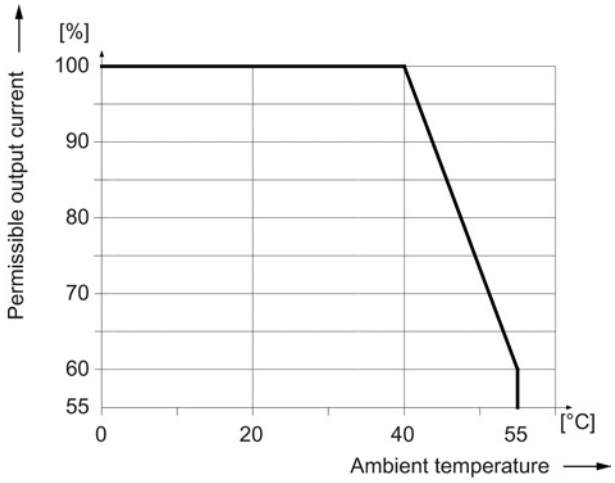

Figure 4-53 Output current as a function of the ambient temperature

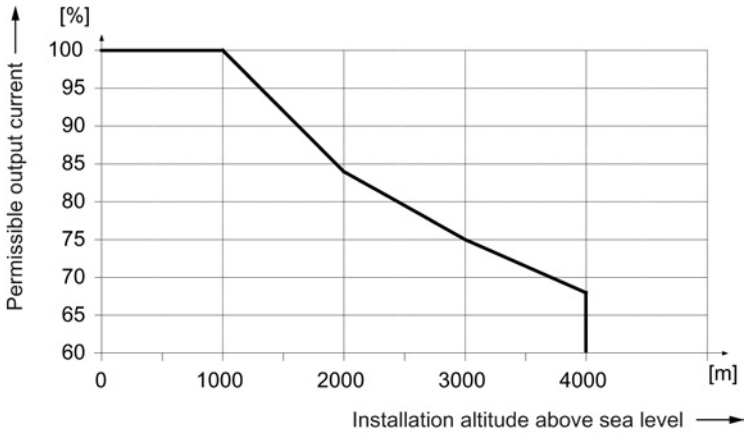

Figure 4-54 Output current as a function of the installation altitude

It is not permissible that the Power Module is operated with its maximum rated current at output frequencies below 10 Hz. Otherwise, its service life could be reduced.

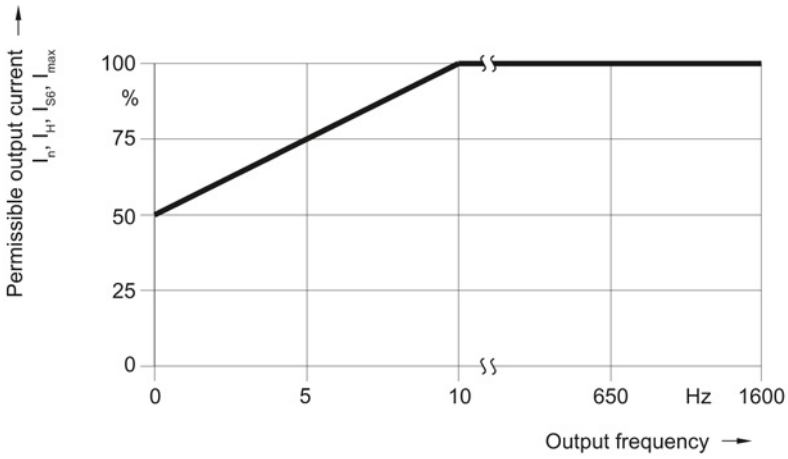

Figure 4-55 Output current as a function of the output frequency

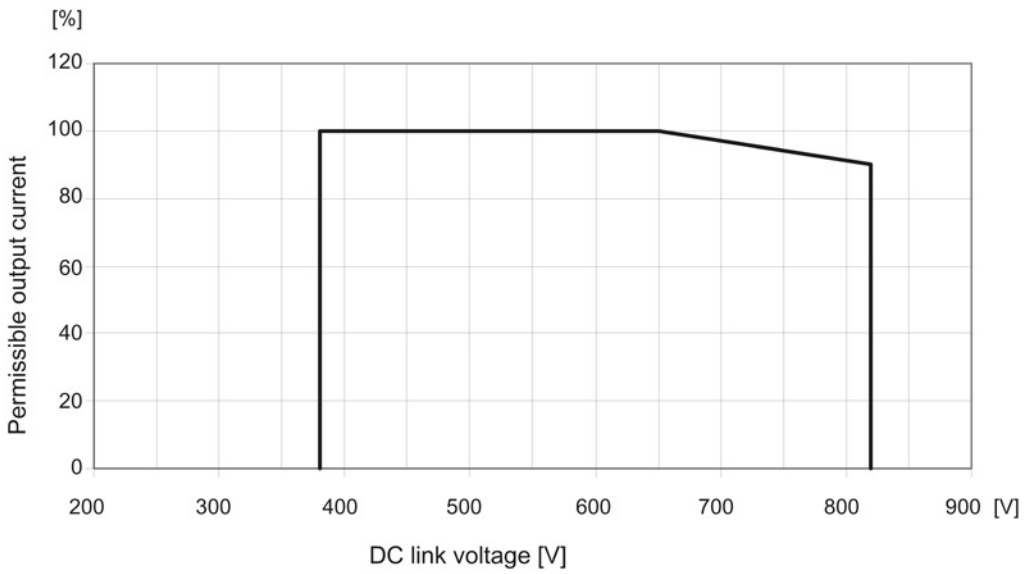

Figure 4-56 Current derating as a function of the DC-link voltage

4.4 Power Modules Chassis

4.4.1 Description

A Power Module is a power unit (frequency inverter) that provides the power supply for the connected motor. A Power Module must be connected to a Control Unit via DRIVE-CLiQ. The open-loop and closed-loop control functions are stored in the Control Unit.

Characteristics of Power Modules

- Version from 210 A to 490 A
- Internal air cooling
- Short-circuit/ground-fault-proof
- Electronic type plate
- Operating status and error status displayed using LEDs
- DRIVE-CLiQ interface for communication with the Control Unit and/or other components in the drive line-up
- Integration in system diagnostics

4.4.2 Safety instructions for Power Modules chassis format

⚠ WARNING

Danger to life if the fundamental safety instructions and residual risks are not observed

The non-observance of the fundamental safety instructions and residual risks stated in Chapter 1 can result in accidents with severe injuries or death.

- Observe the fundamental safety instructions.
- Consider the residual risks for the risk evaluation.

⚠ WARNING

Danger of fire through overheating for insufficient ventilation clearances

Insufficient ventilation clearances result in overheating with danger to persons as a result of smoke and fire. Further, increased failures can occur and the service life of units/systems shortened.

- Observe the cooling clearances above, below, and in front of the component, which are specified in the dimension drawings.

4.4.3 Interface description

4.4.3.1 Overview

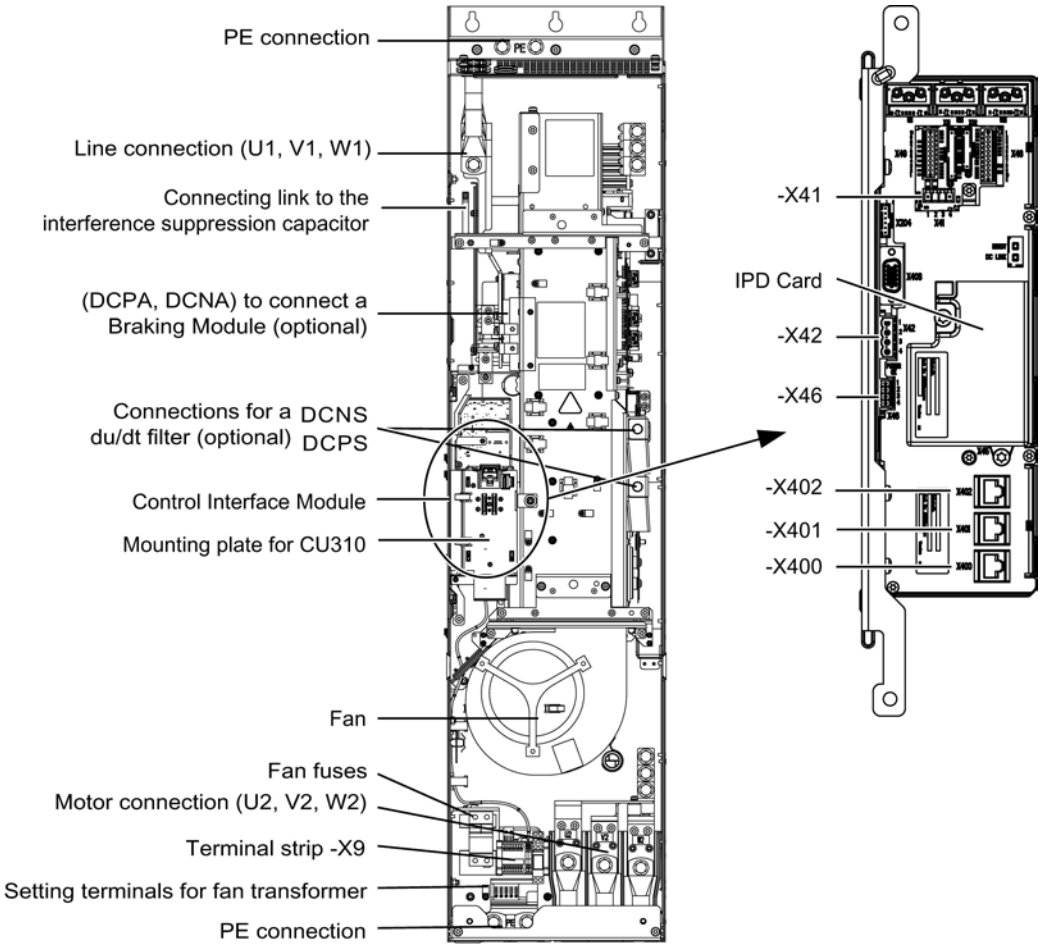

Figure 4-57 Power Module, frame size FX

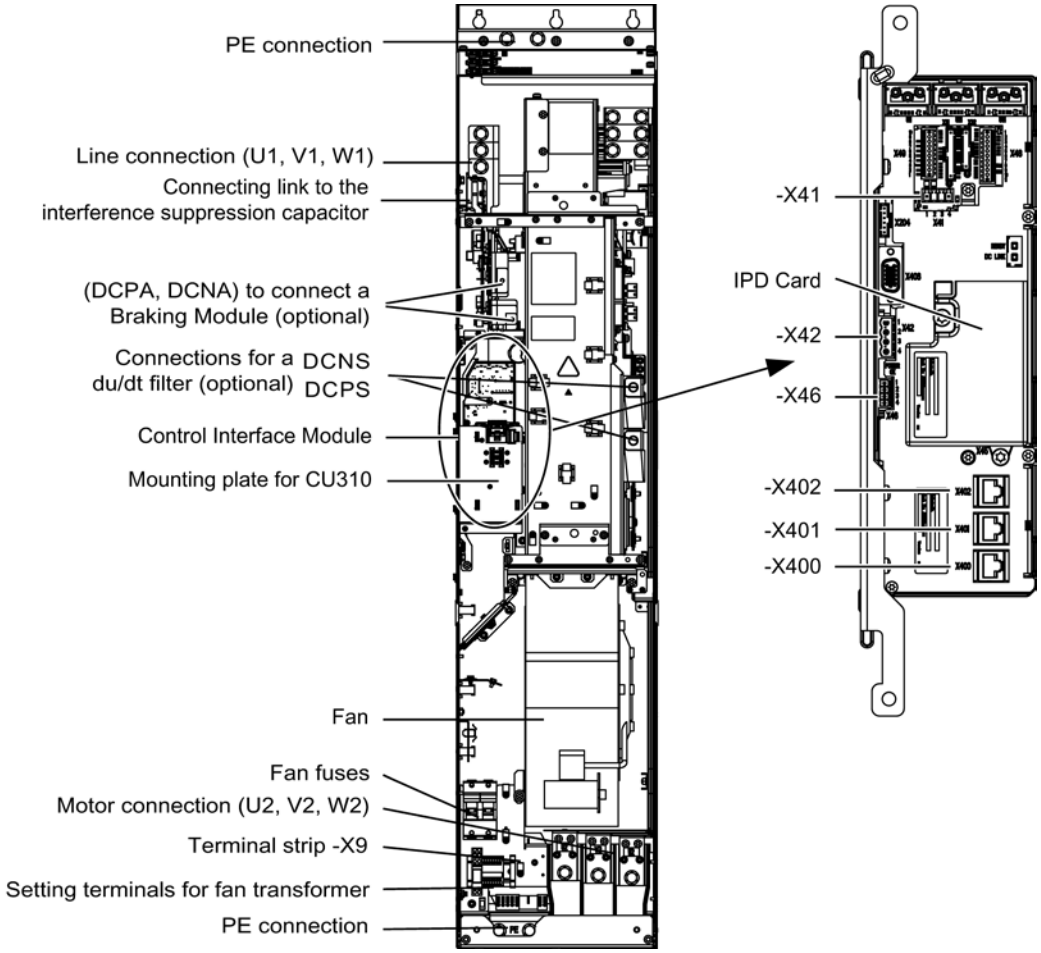

Figure 4-58 Power Module, frame size GX

4.4.3.2 Connection example

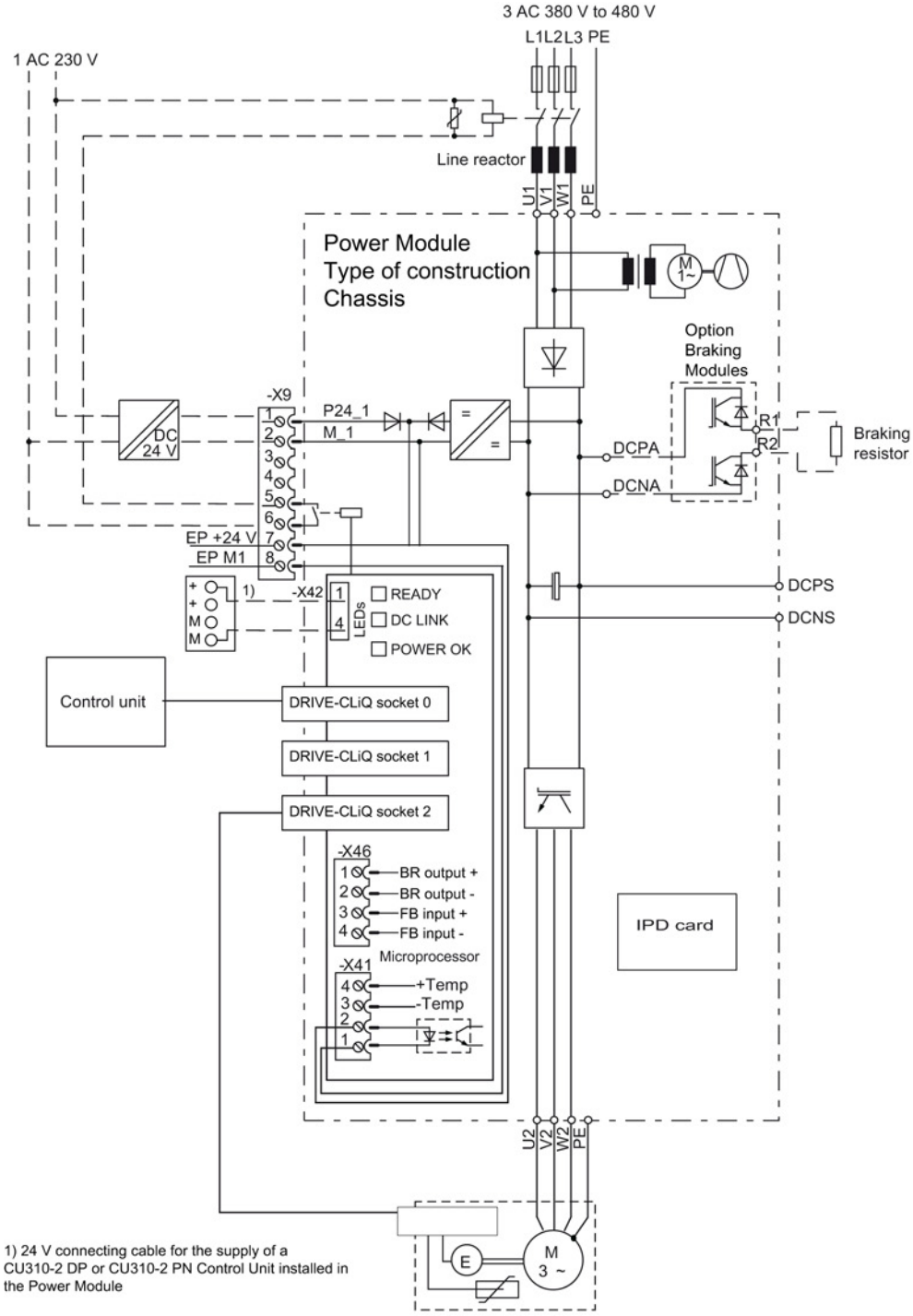

Figure 4-59 Connection example: Power Module chassis

4.4.3.3 Terminal Block X9

Table 4- 29 Terminal block X9

	Terminal	Signal name	Technical data
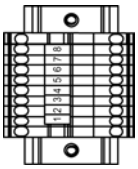	1	P24V	Voltage: 24 V DC (20.4 ... 28.8 V) Current consumption: max 1.4 A
	2	M	
	3	Reserved, do not use	
	4	Reserved, do not use	
	5	Main contactor	240 V AC/ max. 8 A 30 V DC/ max. 1 A
	6	Main contactor	
	7	EP +24 V (Enable Pulses)	Supply voltage: 24 V DC (20.8 V ... 28.8 V) Current consumption: 10 mA Signal propagation delays: L -> H: 100 µs H->L: 1000 µs The pulse disable function is only available when Safety Integrated Basic Functions are enabled.
	8	EP M1 (Enable Pulses)	

Note

The function of the EP terminals is only available when Safety Integrated Basic Functions are enabled.

Note

If the "Safe Torque Off" function is selected, 24 V DC must be applied to terminal -X9:7 and terminal -X9:8 must be grounded. Upon removal, pulse inhibit is activated.

4.4.3.4 DCPS, DCNS connection for a dv/dt filter

Table 4- 30 DCPS, DCNS

Frame size	Cross-section that can be connected	Terminal screw
FX	1 x 35 mm²	M8
GX	1 x 70 mm²	M8

The connecting cable is fed-out downwards through the Power Module.

4.4.3.5 X41 EP terminal / temperature sensor connection

Table 4- 31 Terminal block -X41

	Terminal	Function	Technical data
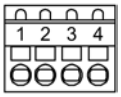	1	EP M1 (Enable Pulses)	Supply voltage: 24 V DC (20.4 ... 28.8 V) Current consumption: 10 mA Signal propagation delays: L → H: 100 µs H → L: 1000 µs
	2	EP +24 V (Enable Pulses)	
	3	-Temp	Temperature sensor KTY84-1C130 / PTC / PT100 sensors
	4	+Temp	
Max. connectable cross-section: 1.5 mm²			

WARNING

Danger to life due to electric shock in the event of voltage flashovers at the temperature sensor

Voltage arcs to the signal electronics can occur for motors without electrical separation of the temperature sensors.

- Only use temperature sensors that fully comply with the specifications of the safety isolation.
- If safe electrical separation cannot be guaranteed (for linear motors or third-party motors, for example), use a Sensor Module External (SME120 or SME125) or Terminal Module TM120.

NOTICE

Device failure due to unshielded or incorrectly laid cables to the temperature sensors

Unshielded or incorrectly laid cables to the temperature sensors can cause induced voltages from the power side to the signal-processing electronics. This can cause massive interferences of all signals (error messages) through to the failure of individual components (damage of the devices).

- Use only shielded cables to the temperature sensors.
- If cables to temperature sensors are laid together with the motor cable, use twisted pairs and separately shielded cables.
- Connect the cable shield to ground potential through a large surface area.
- Recommendation: Use appropriate Motion Connect cables.

NOTICE

Risk of motor overheating for incorrectly connected KTY temperature sensor

A KTY temperature sensor connected with incorrect polarity cannot detect if the motor overheats.

- Make sure that you connect the KTY temperature sensor with the correct polarity.

Note

The temperature sensor connection can be used for motors that are equipped with a KTY84-1C130-, PTC- or PT100 probe in the stator windings.

Note

A cable harness is used to connect terminals -X41:1 and -X41:2 to terminals -X9:8 and -X9:7.

4.4.3.6 X42 terminal strip

Table 4- 32 Terminal block -X42:

	Terminal	Function	Technical data
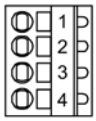	1	P24L	Voltage supply for Control Unit, Sensor Module, and Terminal Module (18 to 28.8 V) Maximum load current: 3 A
	2		
	3	M	
	4		
Max. connectable cross-section: 2.5 mm^2			

Note

When delivered, terminals 1 and 4 are provided with a connecting cable to supply a CU310-2 DP or CU310-2 PN Control Unit.

Note

Connection options for the X42 terminal strip

The terminal block is not intended for free 24 V DC availability (for example for supplying further line-side components), as the voltage supply of the Control Interface Module could also be overloaded and operating capability could thus be compromised.

4.4.3.7 X46 Brake control and monitoring

Table 4- 33 Terminal block -X46

	Terminal	Function	Technical data
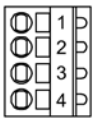	1	BR output +	This interface is intended for the connection of the safe brake adapter.
	2	BR output -	
	3	FB input +	
	4	FB input -	
Max. connectable cross-section: 1.5 mm^2			

Note

For further information, see Section Safe Brake Adapter optional module (Page 384).

⚠ WARNING

Fire hazard due to overheating when permissible connection cable lengths are exceeded

Excessively long connection cables on terminal strip X46 can cause components to overheat with the associated risk of fire and smoke.

- A maximum cable length of 10 m must not be exceeded.
- The cable must not be brought outside the control cabinet or control cabinet group.

4.4.3.8 DRIVE-CLiQ interface X400-X402

Table 4- 34 DRIVE-CLiQ interface X400-X402

	Pin	Name	Technical specifications
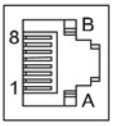	1	TXP	Transmit data +
	2	TXN	Transmit data -
	3	RXP	Receive data +
	4	Reserved, do not use	
	5	Reserved, do not use	
	6	RXN	Receive data -
	7	Reserved, do not use	
	8	Reserved, do not use	
	A	+ (24 V)	Power supply
	B	GND (0 V)	Electronic ground

4.4.3.9 Meaning of the LEDs on the Power Module

Table 4- 35 Meaning of the LEDs "READY" and "DC LINK" on the Control Interface Module on the Power Module

LED state		Description
READY	DC LINK	
Off	Off	The electronics power supply is missing or outside the permissible tolerance range.
Green	Off	The component is ready for operation and cyclic DRIVE-CLiQ communication is taking place.
	Orange	The component is ready for operation and cyclic DRIVE-CLiQ communication is taking place. The DC-link voltage is present.
	Red	The component is ready for operation and cyclic DRIVE-CLiQ communication is taking place. The DC-link voltage is too high.
Orange	Orange	DRIVE-CLiQ communication is being established.
Red	---	At least one fault is present in this component. Note: The LED is activated regardless of whether the corresponding messages have been reconfigured.
Green/Red (0.5 Hz)	–---	Firmware is being downloaded.
Green/Red (2 Hz)	---	Firmware download is complete. Wait for POWER ON.
Green/orange or red/orange	---	Recognition of the component via LED is activated (see SINAMICS S120/S150 List Manual) Note: Both options depend on the LED status when component recognition is activated using the parameter.

WARNING

Danger of death when live parts of the DC link are touched

Irrespective of the state of the LED "DC LINK", hazardous DC-link voltages can be present. This means the touching of live parts can result in death or serious injury.

- Observe the warning information on the component.

Table 4- 36 Meaning of the LED "POWER OK" on the Control Interface Module in the Power Module

LED	Color	Status	Description
POWER OK	Green	Off	DC-link voltage < 100 V and voltage at –X9:1/2 less than 12 V.
		On	The component is ready for operation.
		Flashing	There is a fault. If the LED continues to flash after you have performed a POWER ON, please contact your Siemens service center.

4.4.4 Dimension drawings

Dimension drawing frame size FX

The cooling clearances to be maintained are indicated by the dotted line.

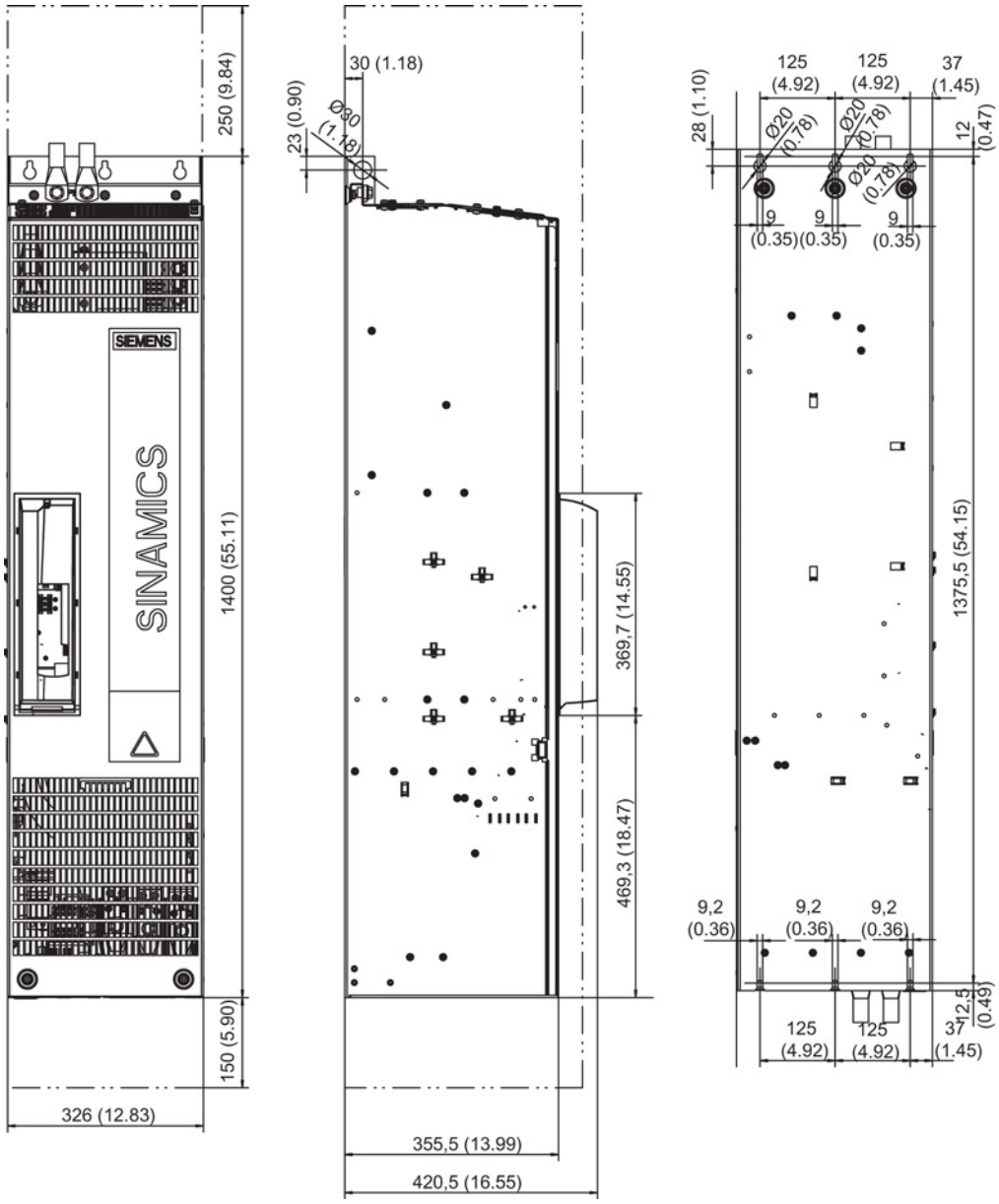

Figure 4-60 Dimension drawing Power Module, frame size FX

Dimension drawing frame size GX

The cooling clearances to be maintained are indicated by the dotted line.

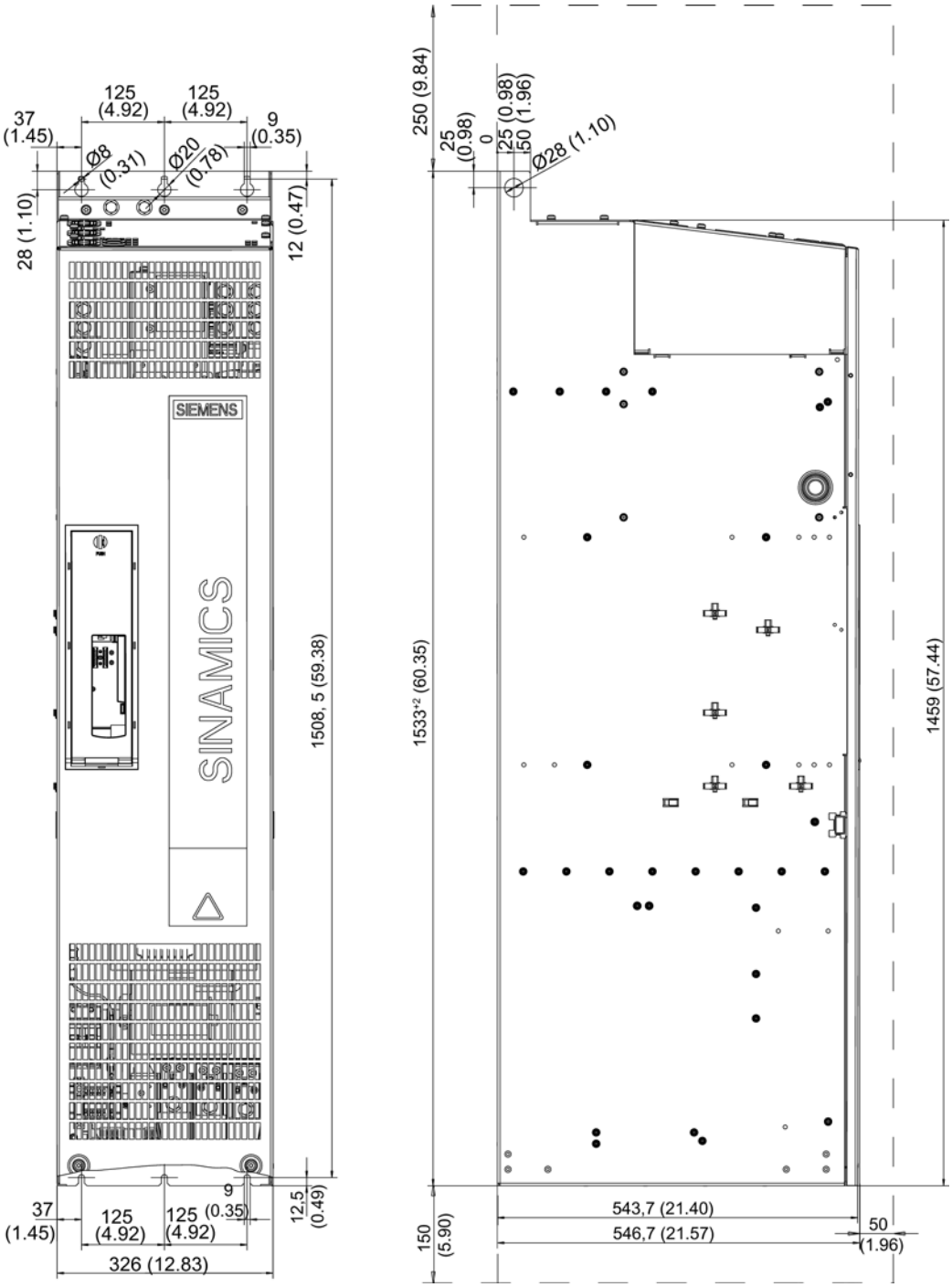

Figure 4-61 Dimension drawing Power Module, frame size GX

4.4.5 Electrical connection

Adjusting the fan voltage (-T10)

The power supply for the device fans (1-phase 230 VAC) in the Power Module (-T10) is taken from the line supply using a transformer. The mounting position of the transformer is shown in the interface descriptions.
The transformers are fitted with primary taps so that they can be fine-tuned to the line voltage. When delivered, the taps are always set to the highest level. With a low supply voltage, the appropriate transformer tap must be activated.

The connections at the setting terminals must be connected to "0" and the line voltage.

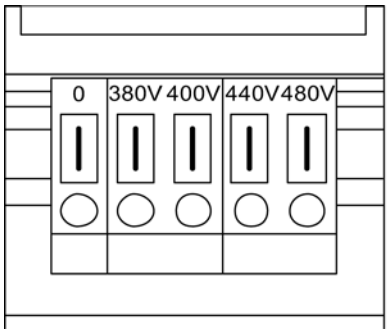

Figure 4-62 Setting terminals for the fan transformers

The supply voltage assignments for making the appropriate setting on the fan transformer are indicated in the following table (factory presetting): 480 V/0 V)

⚠ WARNING

Danger of fire due to overheating resulting from insufficient equipment fan voltage

If the terminals are not reconnected to the actual line voltage, overheating and human danger due to smoke and fire may result. Moreover, the fan fuses may blow due to overload.

- Assign the terminals in accordance with the actual line voltage.

Table 4- 37 Assignment of the existing line voltage for setting at the fan transformer

Line voltage	Tap at the fan transformer (-T10)
380 V ± 10%	380 V
400 V ± 10%	400 V
440 V ± 10%	440 V
480 V ± 10%	480 V

Remove the connection clip for the interference-suppression capacitor for operation on an ungrounded line supply / IT supply

If the Power Module is operated from a non-grounded line supply (IT system), the connection bracket for the interference suppression capacitor of the Power Module must be removed.

The position of the connection clip can be seen in the overviews of the Power Modules.

Note

Warning label on the connection clip

A yellow warning label is attached to each connection clip so that it is easier to find.

- The warning label must removed from the connection clip (by pulling it off) if the connection clip is to remain in the unit (operation on a grounded line supply).
- The warning label must be removed together with the connection clip if the unit is operated on a non-grounded line supply (IT supply system).

Figure 4-63 Warning label on the connection clip

NOTICE
Damage resulting from intact connection clip to interference suppression capacitor Failure to remove the connection clip for the interference suppression capacitor for a non-grounded line supply (IT supply system) can cause significant damage to the chassis unit. • Remove the connection clip to the interference suppression capacitor.

4.4.6 Technical data

Table 4- 38 Technical data, Power Modules Chassis

Line voltage 3-ph. 380 V to 480 V AC ±10% (-15% < 1 min)						
Order number	**6SL3310–**	**1TE32-1AA3**	**1TE32-6AA3**	**1TE33–1AA3**	**1TE33-8AA3**	**1TE35-0AA3**
Frame size		FX	FX	GX	GX	GX
Output current rated current I_n base load current I_L base load current I_H for S6 duty (40 %) I_{S6} peak current I_{max}	 A A A A A	 210 205 178 230 307	 260 250 233 285 375	 310 302 277 340 453	 380 370 340 430 555	 490 477 438 540 715
Supply voltages Electronics power supply Overvoltage trip Undervoltage trip	 V_{DC} V_{DC} V_{DC}	 24 (20,4 … 28,8) 820 ± 2 % 424				
Type rating [1] on basis of I_n on basis of I_H	 kW kW	 110 90	 132 110	 160 132	 200 160	 250 200
Rated pulse frequency without derating with derating	 kHz kHz	 2 8	 2 8	 2 8	 2 8	 2 8
Power loss	kW	2,46	3,27	4,0	4,54	5,78
Cooling air requirement	m³/s	0,17	0,23	0,36	0,36	0,36
Sound pressure level at 50/60 Hz	 dB(A)	 66 / 67	 68 / 72	 68 / 72	 68 / 72	 68 / 72
Rated input current	A	229	284	338	395	509
Current requirement [2]at 24 V DC, max.	A	0,8	0,8	0,9	0,9	0,9
NH fuses Rated current	 A	3NA3144 250	3NA3250 300	3NA3254 355	3NA3260 400	3NA3372 630
Fuses **UL Class J** Rated current Short-circuit current rating SCCR	 A kA	3NE1227 250 65	3NE1230 300 65	 350 65	 400 65	 600 65
Circuit-breaker type designation IEC 60947 rated current	 A	3VL4725-1DC36-0AA0 200 … 250	3VL4731-1DC36-0AA0 250 … 315	3VL4740-1DC36-0AA0 320 … 400	3VL5750-1DC36-0AA0 400 … 500	3VL5763-1DC36-0AA0 500 … 630
Circuit breaker type designation UL489 / CSA C22.2 No. 5-02 Rated current Short-circuit current rating SCCR	 A kA	3VL3125-3KN30-0AA0 250 65	3VL4130-3KN30-0AA0 300 65	3VL4135-3KN30-0AA0 350 65	3VL4140-3KN30-0AA0 400 65	3VL4560-3KN30-0AA0 600 65
Line supply connection U1, V1, W1		Flat connector for M10 cable lug, max. connection cross-section 2 x 185 mm²		Flat connector for M10 cable lug, max. connection cross-section 2 x 240 mm²		

Line voltage 3-ph. 380 V to 480 V AC ±10% (-15% < 1 min)						
Order number	**6SL3310–**	**1TE32-1AA3**	**1TE32-6AA3**	**1TE33–1AA3**	**1TE33-8AA3**	**1TE35-0AA3**
Motor connection U2, V2, W2		Flat connector for M10 cable lug, max. connection cross-section 2 x 185 mm^2		Flat connector for M10 cable lug, max. connection cross-section 2 x 240 mm^2		
DC link connections DCPA, DCNA, (option, Braking Module)		Flat connector for M6 cable lug, connection cross-section 1 x 35 mm^2		Flat connector for M6 cable lug, conductor cross-section 1 x 50 mm^2		
DC link connections DCPS, DCNS (option, dV/dt filter)		Flat connector for M8 cable lug, connection cross-section 1 x 35 mm^2		Flat connector for M8 cable lug, conductor cross-section 1 x 70 mm^2		
PE connection		Flat connector for M10 cable lug, max. connection cross-section 2 x 185 mm^2		Flat connector for M10 cable lug, max. connection cross-section 2 x 240 mm^2		
Max. motor cable length [3]	m	300 (shielded) / 450 (unshielded)				
Max. ambient temperature without derating with derating	 °C °C	 40 55	 40 55	 40 55	 40 55	 40 55
Degree of protection		IP 20 or IPXXB				
Width	mm	326	326	326	326	326
Height	mm	1400	1400	1533	1533	1533
Depth	mm	356 [4]	356 [4]	545	545	545
Weight	kg	104	104	162	162	162

[1] Rated power of a typical standard induction motor at 400 V 3 AC

[2] Current consumption of Power Module only. If a Control Unit is supplied with 24 V DC from the Power Module, its current consumption must be added.

[3] Max. motor cable length 100 m (shielded) in conjunction with a line filter to comply with the EMC limit values of EN 61800-3 Category C2.

[4] Depth = 421 mm including front cover when a Control Unit is installed

4.4.6.1 Characteristics

Overload capability

The Power Modules are equipped with an overload reserve, e.g. to handle breakaway torques.

In drives with overload requirements, the appropriate base load current must, therefore, be used as a basis for the required load.

The overload data is valid under the precondition that the Power Module is operated with its base load current before and after the overload occurs (a load duration of 300 s is used as a basis here).

Low overload

The base load current for low overload I_L is based on a load duty cycle of 110% for 60 s or 150% for 10 s with a load duty duration of 300 s.

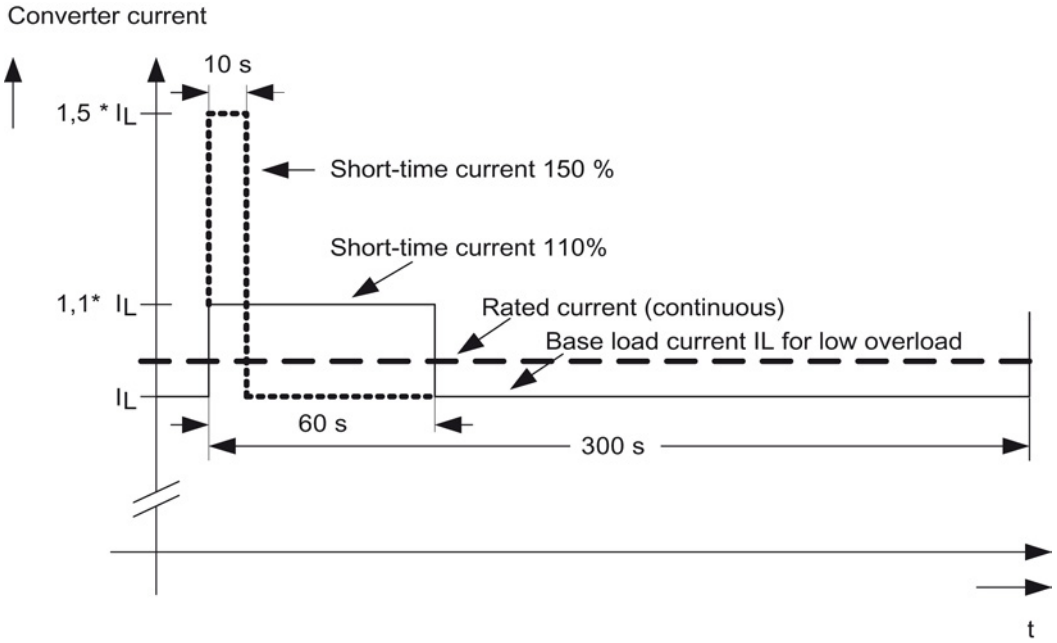

Figure 4-64 Characteristic: Low overload

High overload

The base load current for high overload I_H is based on a load duty cycle of 150% for 60 s or 160% for 10 s with a load duty duration of 300 s.

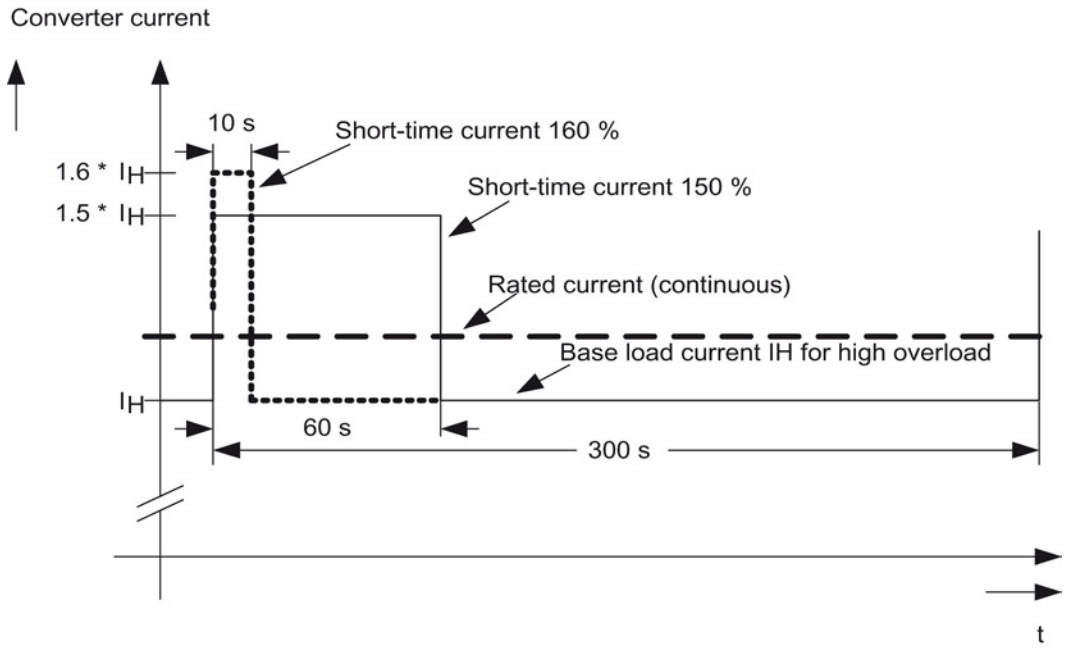

Figure 4-65 Characteristic: High overload

Derating for Chassis Power Modules

For further information, see Section Derating as a function of the ambient temperature, pulse frequency, and installation altitude (Page 37).

Table 4- 39 Current derating for chassis units as a function of ambient temperature (supply air temperature at the air inlet of the chassis unit) and installation altitude

Installation altitude above sea level in m	Current derating factor (in % of rated current) at an ambient temperature (air intake temperature) of							
	20° C	25° C	30° C	35° C	40° C	45° C	50° C	55° C
0 ... 2000	100 %	100 %	100 %	100 %	100 %	93,3 %	86,7 %	80 %
... 2500	100 %	100 %	100 %	100 %	96,3 %			
... 3000	100 %	100 %	100 %	98,7 %				
... 3500	100 %	100 %	100 %					
... 4000	100 %	100 %	96,3 %					
... 4500	100 %	97,5 %						
... 5000	98,2 %							

The values apply under the precondition that a cooling air flow though the units as stated in the technical data is ensured.

Table 4- 40 Derating factor of the output current as a function of the pulse frequency

Order No. 6SL3310-...	Power [kW]	Output current for a pulse frequency of 2 kHz [A]	Derating factor for a pulse frequency of 4 kHz	Derating factor for a pulse frequency of 8 kHz
1TE32-1AAx	110	210	82 %	50 %
1TE32-6AAx	132	260	83 %	50 %
1TE33-1AAx	160	310	88 %	50 %
1TE33-8AAx	200	380	87 %	50 %
1TE35-0AAx	250	490	78 %	50 %

By multiplying the rated pulse frequency with a multiple integer, the following output frequencies can be achieved taking into account the derating factors:

Table 4- 41 Maximum output frequencies achieved by increasing the pulse frequency in VECTOR mode

Pulse frequency [kHz]	Maximum output frequency [Hz]
2	160
4	320[1)]
8	640[1)]

[1)] The maximum output frequency is limited to 300 Hz due to the closed-loop control (see SINAMICS S120/S150 List Manual.)

Table 4- 42 Maximum output frequencies achieved by increasing the pulse frequency in SERVO mode

Pulse frequency [kHz]	Maximum output frequency [Hz]
2	300
4	300 / 650[1)]

1) The maximum output frequency of 650 Hz is can only be achieved for a current controller clock cycle of 125 µs (factory setting: 250 µs.) This is only possible for Power Modules with order numbers 6SL3310–1TExx–xAA3 and firmware version as of V4.3x.

It is not permissible that the Power Module is operated with its maximum rated current at output frequencies below 10 Hz. Otherwise, its service life could be reduced.

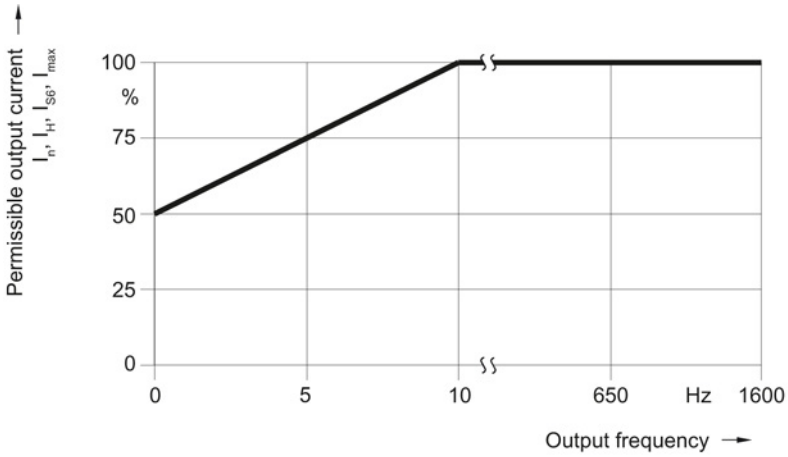

Figure 4-66 Output current as a function of the output frequency

DC link components 5

5.1 Blocksize

5.1.1 Braking resistors

5.1.1.1 Description

The PM240-2 and PM340 Power Modules cannot regenerate into the line supply. For regenerative operation, e.g. the braking of a rotating mass, a braking resistor must be connected to convert the resulting energy into heat.

A thermostatic switch monitors the braking resistor for overtemperature and issues a signal on an isolated contact if the limit value is exceeded.

5.1.1.2 Safety instructions for blocksize braking resistors

⚠ WARNING

Danger to life if the fundamental safety instructions and residual risks are not observed

The non-observance of the fundamental safety instructions and residual risks stated in Chapter 1 can result in accidents with severe injuries or death.

- Observe the fundamental safety instructions.
- Consider the residual risks for the risk evaluation.

⚠ WARNING

Risk of fire and device damage as a result of ground fault / short-circuit

The cables to the braking resistor must be routed so that a ground fault or short circuit can be ruled out. A ground fault can result in fire with associated smoke.

- Comply with local installation regulations, which allow this fault to be ruled out.
- Protect the cables from mechanical damage.
- In addition, apply one of the following measures:
  - Using cables with double insulation.
  - Observe adequate clearances, e.g. through the use of spacers.
  - Route the cables in separate cable ducts or pipes.

⚠ CAUTION

Risk of burns or damage resulting from high surface temperature of the braking resistor

The braking resistor can become very hot. You can be severely burnt when touching the surface. Neighboring components can become damaged.

- Mount the braking resistor so that it cannot be touched. If this is not possible, at the dangerous locations, attach an appropriate warning note that is clearly visible and easy to understand.
- To avoid temperature-related damage to adjacent components, follow these rules:

  For PM340 Power Modules:
  - Ensure a cooling clearance of 100 mm on all sides of the braking resistor

  For PM240-2 Power Modules installed horizontally close to the ground:
  - Installation on sheet steel > 2 mm
  - Ensure a cooling clearance of 250 mm at the sides of the braking resistor
  - Cooling clearance of 1000 mm above the braking resistor

  For PM240-2 Power Modules when installed vertically against a wall:
  - Installation on sheet steel > 2 mm
  - Observe a cooling clearance of 100 mm at the sides of the braking resistor
  - Cooling clearance of 1000 mm above the braking resistor

5.1.1.3 Connection examples

The braking resistor is connected directly on the Power Module at the terminals DCP/R1 and R2.

The braking resistor must be protected against overheating. A thermostatic switch handles this protective function (included in the scope of supply of each breaking resistor). Evaluate the braking resistor temperature monitoring so that the motor is switched off when the resistor is in an overtemperature condition. Two techniques to connect the thermostatic switch are described in the following.

Connect the thermostatic switch to a Control Unit

Connect the thermostatic switch to a free digital input of the Control Unit. Set the function of this digital input to the OFF2 command. If the braking resistor overheats, the Power Module is disconnected from the power supply.

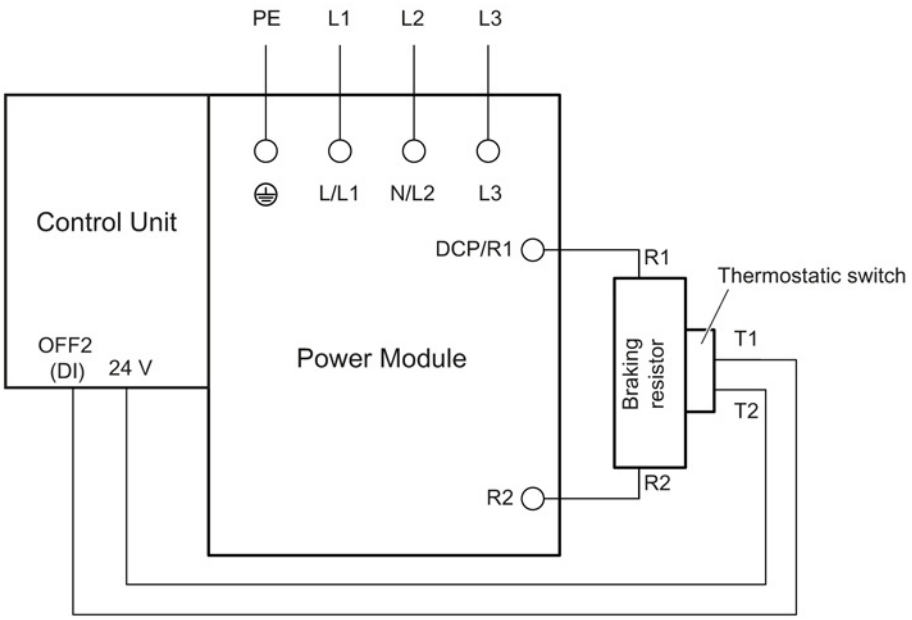

Figure 5-1 Connecting the thermostatic switch on the braking resistor to a Control Unit

5.1.1.4 Dimension drawings

Braking resistors for PM240-2 Power Modules

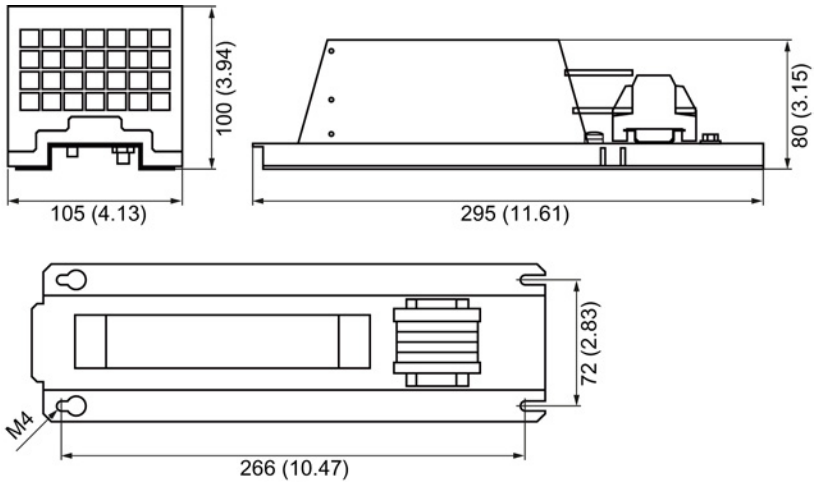

Figure 5-2 Dimension drawing of braking resistor for PM240-2, frame size FSA, 0.55 … 1.5 kW, all dimensions in mm and (inch)

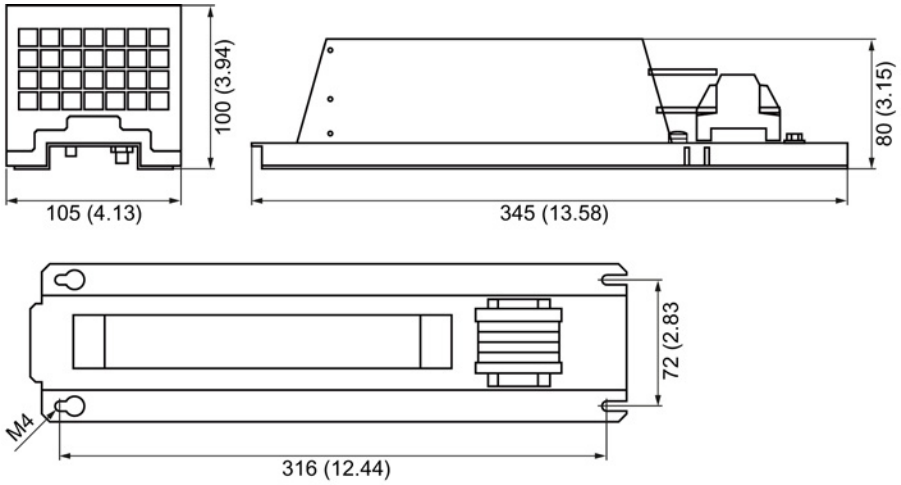

Figure 5-3 Dimension drawing of braking resistor for PM240-2, frame size FSA, 2.2 … .3.0 kW, all dimensions in mm and (inch)

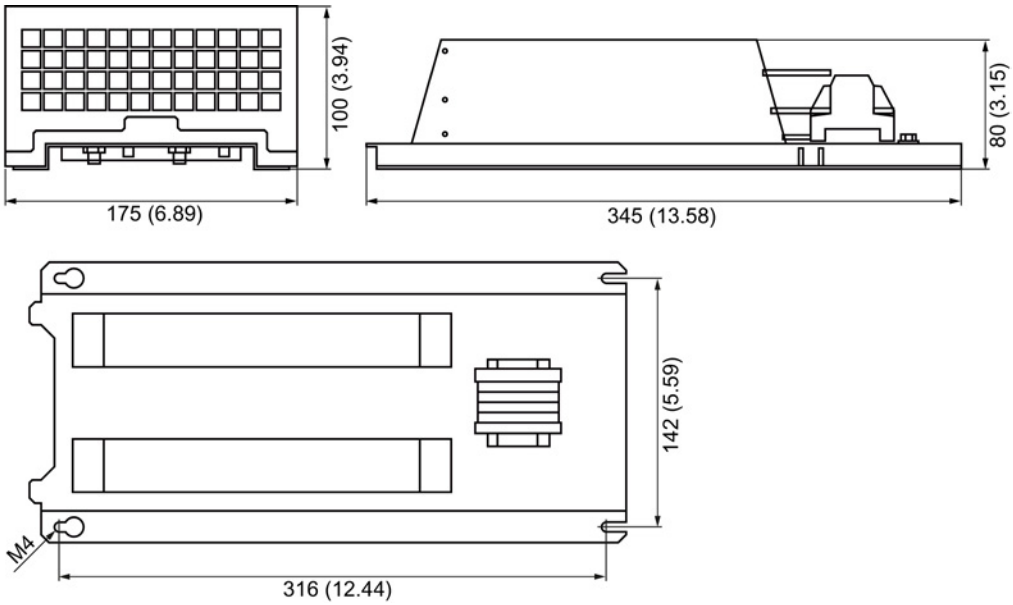

Figure 5-4 Dimension drawing braking resistor for PM240-2, frame size FSB, all data in mm (inches)

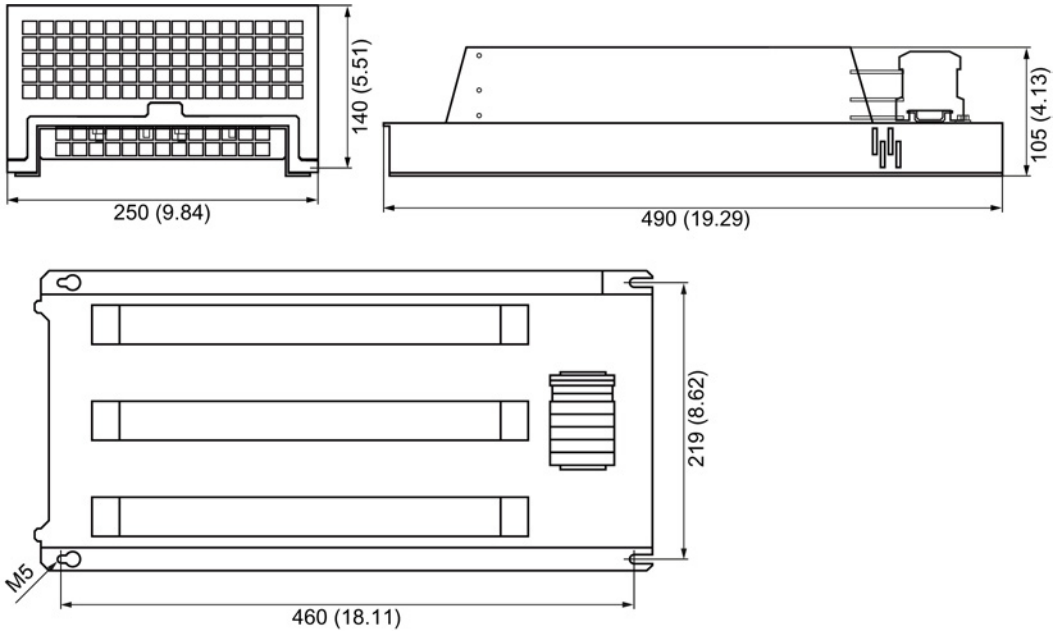

Figure 5-5 Dimension drawing of PM240-2, frame size FSC, all data in mm (inches)

Braking resistors for PM340 Power Modules

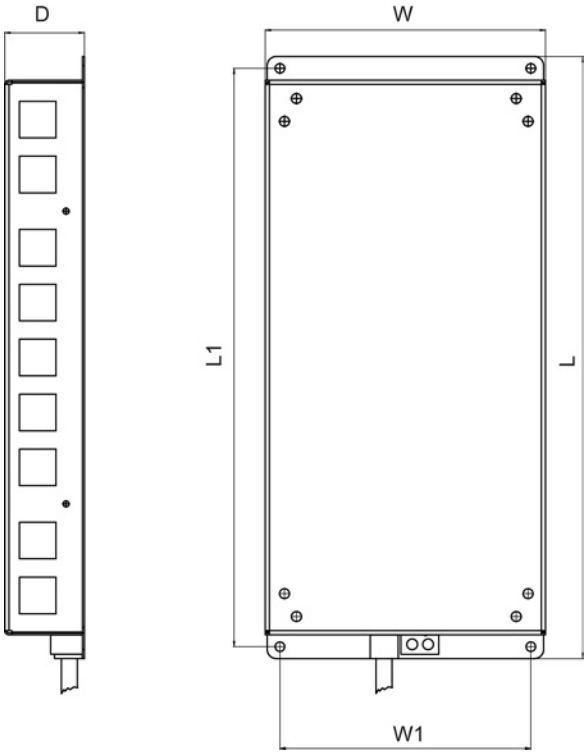

Figure 5-6 Dimension drawing of braking resistor for PM340, frame sizes FSA / FSB

Table 5- 1 Dimension drawing in mm (inches)

Order number	6SE6400-4BC05-0AA0	6SE6400-4BD11-0AA0	6SL3201-0BE12-0AA0
Frame size	FSA	FSA	FSB
L	230 (9.05)	230 (9.05)	239 (9.40)
L1	217 (8.54)	217 (8.54)	226 (8.89)
L2	-	-	-
L3	-	-	-
D	43.5 (1.71)	43.5 (1.71)	43.5 (1.71)
D1	-	-	-
D2	-	-	-
W	72 (2.83)	72 (2.83)	149 (5.86)
W1	56 (2.20)	56 (2.20)	133 (5.24)

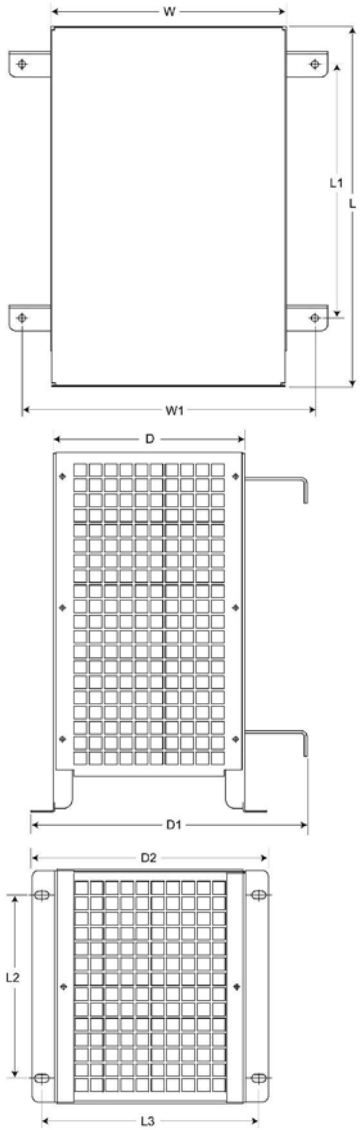

Figure 5-7 Dimension drawing of braking resistor for PM340, frame sizes FSC / FSD / FSE / FSF

Table 5- 2 Dimension drawing in mm (inches)

Order number	6SE6400-4BD16-5CA0	6SE6400-4BD21-2DA0	6SE6400-4BD22-2EA0	6SE6400-4BD24-0FA0
Frame size	FSC	FSD	FSE	FSF
L	285 (11.22)	515 (20.27)	645 (25.39)	650 (25.59)
L1	200 (7.87)	350 (13.77)	480 (18.89)	510 (20.07)
L2	145 (5.70)	205 (8.07)	205 (8.07)	270 (10.62)
L3	170 (6.69)	195 (7.67)	195 (7.67)	335 (13.18)
D	150 (5.90)	175 (6.88)	175 (6.88)	315 (12.40)

Order number	6SE6400-4BD16-5CA0	6SE6400-4BD21-2DA0	6SE6400-4BD22-2EA0	6SE6400-4BD24-0FA0
Frame size	FSC	FSD	FSE	FSF
D1	217 (8.54)	242 (9.52)	242 (9.52)	382 (15.03)
D2	185 (7.28)	210 (8.26)	210 (8.26)	382 (15.03)
W	185 (7.28)	270 (10.62)	270 (10.62)	400 (15.74)
W1	230 (9.05)	315 (12.40)	315 (12.40)	435 (17.12)

5.1.1.5 Installation

The braking resistor for all modules is connected at terminals DCP/R1 and R2. Since it generates heat, it should be mounted to the side of the Power Modules.

The braking resistors for the PM340 Power Modules in frame sizes FSA and FSB are designed as base components. If the PM340 Power Modules of the FSA or FSB frame size are operated without a line reactor, the braking resistors can also be installed under the Power Modules.

The braking resistors for the PM340 Power Modules of the FSC to FSF frame sizes should be placed outside the control cabinet or the switchgear room to lead the resulting heat loss away from the Power Modules. This reduces the level of air conditioning required.

The braking resistors can be installed horizontally or vertically. The power connections on vertically installed resistors must be at the bottom.

Table 5- 3 Connecting the braking resistors for PM240-2 Power Modules on the mounting surface

Frame size	Fastening	Tightening torque
FSA	4 x M4 screws 4 x M4 nuts 4 x M4 washers	Tightening torque: 2.5 Nm
FSB		
FSC	4 x M5 screws 4 x M5 nuts 4 x M5 washers	Tightening torque: 2.5 Nm

Note

PE connection

The PE connection for the braking resistor is established via the shield connection for frame sizes FSA to FSF.

For installation according to EN 60204-1 and EN 61800-5-1, the PE connection on the housing must be used. The PE conductor in the pigtail is, in this case, not to be used, but can be suitably tied off or cut off.

5.1.1.6 Technical data

Recommendation

Use the following or comparable braking resistors for the PM240-2 Power Modules 200 V. The technical properties and statements made by the manufacturer apply.

Table 5- 4 Technical data of PM240-2 Blocksize braking resistors, 200 V

Line voltage 1-phase 200 VAC -10% to 240 VAC +10%					
Manufacturer		**Heine Resistors GmbH**			
Manufacturer's designation		**GWHS 167-60x30-K IP20 200. ±7% 37.5 W TS KA 100 cm**	**GWHS 217-60x30-K IP20 68. ±7% 110 W TS KA 100 cm**	**GWHS 337-60x30-K IP20 37. ±7% 200 W TS KA 100 cm**	**GWHS 337-120x30-K IP20 20. ±7% 375 W TS KA 100 cm**
Manufacturer order number		**JJY 02 31467 2 0008**	**JJY 02 31517 2 0007**	**JJY 02 31637 2 0018**	**JJY 02 34337 2 0001**
Frame size		FSA (0.55 … 0.75 kW)	FSB (1.1 … 2.2 kW)	FSC (3.0 … 4.0 kW)	FSC (5.5 … 7.5 kW)
Matching Power Modules[1)]		6SL3210-1PB13-0xL0 1PB13-8xL0 6SL3211-1PB13-8xL0	6SL3210-1PB15-5xL0 1PB17-4xL0 1PB21-0xL0 6SL3211-1PB21-0xL0	6SL3210-1PB21-4xL0 1PB21-8xL0 6SL3211-1PB21-8xL0	6SL3210-1PC22-2xL0 1PC22-8xL0 6SL3211-1PC22-2xL0
Resistance	Ω	200	68	37	20
Unit rating P_{DB}	W	37,5	110	200	375
Peak power P_{max}	kW	0,75	2,2	4,0	7,5
Load duration for peak power T_a	s	12	12	12	12
Period duration of braking duty cycle T	s	240	240	240	240
Degree of protection		IP20	IP20	IP20	IP20
Power connections (including PE) Max. connectable cross-section: Tightening torque:		2.5 mm² 0.5 Nm	4.0 mm² 0.5 Nm	6.0 mm² 0.8 Nm	6.0 mm² 0.8 Nm
Thermostatic switch Max. cross-section that can be connected: Tightening torque:		2.5 mm² 0.5 Nm	2.5 mm² 0.5 Nm	2.5 mm² 0.5 Nm	2.5 mm² 0.5 Nm

Line voltage 1-phase 200 VAC -10% to 240 VAC +10%					
Manufacturer		Heine Resistors GmbH			
Manufacturer's designation		GWHS 167-60x30-K IP20 200. ±7% 37.5 W TS KA 100 cm	GWHS 217-60x30-K IP20 68. ±7% 110 W TS KA 100 cm	GWHS 337-60x30-K IP20 37. ±7% 200 W TS KA 100 cm	GWHS 337-120x30-K IP20 20. ±7% 375 W TS KA 100 cm
Manufacturer order number		JJY 02 31467 2 0008	JJY 02 31517 2 0007	JJY 02 31637 2 0018	JJY 02 34337 2 0001
Thermostatic switch (NC contact) Maximum contact load connecting cable		250 VAC / 2.5 A	250 VAC / 2.5 A	250 VAC / 2.5 A	250 VAC / 2.5 A
Weight	kg	0,5	0,7	1,1	2,2

1) x = A: Power Module with integrated line filter, x = U: Power Module without integrated line filter

Table 5- 5 Technical data of PM240-2 Blocksize braking resistors, 400 V

Line voltage 3-phase 380 VAC -10% to 480 VAC +10%					
Order No. 6SL3201-		**0BE14-3AA0**	**0BE21-0AA0**	**0BE21-8AA0**	**0BE23-8AA0**
Frame size		FSA (0.55 … 1.5 kW)	FSA (2.2 … 3.0 kW)	FSB (5.5 … 7.5 kW)	FSC (11 … 15 kW)
Matching Power Modules[1)]		6SL3210- 1PE11-8xL1 1PE12-3xL1 1PE13-2xL1 1PE14-3xL1	6SL3210- 1PE16-1xL1 1PE18-0xL0 6SL3211- 1PE18-0xL1	6SL3210- 1PE21-1xL0 1PE21-4xL0 1PE21-8xL0 6SL3211- 1PE21-8xL0	6SL3210- 1PE22-7xL0 1PE23-3xL0 6SL3211- 1PE23-3xL0
Resistance	Ω	370	140	75	30
Unit rating P_{DB}	W	75	200	375	925
Peak power P_{max}	kW	1,5	4	7,5	18,5
Load duration for peak power T_a	s	12	12	12	12
Period duration of braking duty cycle T	s	240	240	240	240
Degree of protection		IP20	IP20	IP20	IP20
Power connections (including PE) Max. connectable cross-section: Tightening torque:		 2.5 mm² 0.5 Nm	 2.5 mm² 0.5 Nm	 4.0 mm² 0.5 Nm	 6.0 mm² 0.8 Nm
Thermostatic switch Max. cross-section that can be connected: Tightening torque:		 2.5 mm² 0.5 Nm	 2.5 mm² 0.5 Nm	 2.5 mm² 0.5 Nm	 2.5 mm² 0.5 Nm
Thermostatic switch (NC contact) Maximum contact load connecting cable		250 VAC / 2.5 A	250 VAC / 2.5 A	250 VAC / 2.5 A	250 VAC / 2.5 A
Weight	kg	1,5	1,8	2,7	6,2

[1)] x = A: Power Module with integrated line filter, x = U: Power Module without integrated line filter

Table 5- 6 Technical data of braking resistors for PM340 Power Modules, frame sizes FSA to FSC

Order number		6SE6400-4BC05-0AA0	6SE6400-4BD11-0AA0	6SL3201-0BE12-0AA0	6SE6400-4BD16-5CA0
Suitable for Power Modules of frame size		FSA (1-phase AC) [1]	FSA (3-phase AC) [2]	FSB [2]	FSC [2]
Resistance	Ω	180	390	160	56
Unit rating P_{DB}	kW	0,05	0,1	0,2	0,65
Peak power P_{max}	kW	1	1,7	4,0	13
Load duration for peak power T_a	s	27,6	13,8	12,6	13,1
Period duration of braking duty cycle T	s	276	276	252	262
Degree of protection		IP20 or IPXXB	IP20 or IPXXB	IP20 or IPXXB	IP20 or IPXXB
Power connections (including PE)		Pigtail 3 x 1.5 mm² shielded, length 0.5 m	Pigtail 3 x 1.5 mm² shielded, length 0.5 m	Pigtail 3 x 1.5 mm² shielded, length 0.5 m	Pigtail 3 x 1.5 mm² shielded, length 0.9 m
Thermostatic switch (NC contact) Maximum contact load connecting cable		250 VAC / 2.5 A	250 VAC / 2.5 A	250 VAC / 2.5 A	250 VAC / 2.5 A
Weight	kg	1,0	1,0	1,6	3,8

For information about order numbers, refer to chapter: Power Modules, section: Power Modules Blocksize (PM340), technical data

[1] Power Modules Blocksize, 1-phase AC

[2] Power Modules Blocksize, 3-phase AC

Table 5- 7 Technical data of braking resistors for PM340 Power Modules, frame sizes FSD to FSF

Order number		6SE6400-		
		4BD21-2DA0	4BD22-2EA0	4BD24-0FA0
Suitable for Power Modules of frame size		FSD [1]	FSE [1]	FSF [1]
Resistance	Ω	27	15	8,2
Unit rating P_{DB}	kW	1,2	2,2	4,0
Peak power P_{max}	kW	24	44	80
Load duration for peak power T_a	s	13,6	14,5	13,1
Period duration of braking duty cycle T	s	271	290	252
Degree of protection		IP20 or IPXXB	IP20 or IPXXB	IP20 or IPXXB
Power connections		M6 studs	M6 studs	M6 studs
Thermostatic switch (NC contact) Maximum contact load connecting cable		250 VAC / 2.5 A	250 VAC / 2.5 A	250 VAC / 2.5 A
Weight	kg	7,4	10,6	16,7

For information about order numbers, refer to chapter: Power Modules, section: Power Modules Blocksize (PM340), technical data,

[1] Power Modules Blocksize, 3-phase AC

Duty cycles

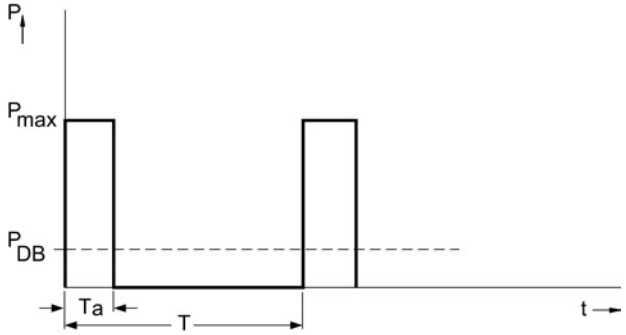

Figure 5-8 Load diagram for the braking resistor, in Blocksize format

T [s] period duration of braking duty cycle

T_a [s] load duration for peak power

P_{DB} [W] unit rating of the braking resistor

P_{max} [W] peak braking power of the braking resistor

5.2 Chassis

5.2.1 Braking Modules

5.2.1.1 Description

A Braking Module (and an external braking resistor) is required in certain cases when the drive is to be braked or brought to a standstill (e.g. EMERGENCY SWITCHING-OFF Category 1). The Braking Module contains the power electronics and the associated control. The supply voltage for the electronics is taken from the DC link.

During operation, the DC link energy is converted to heat loss in an external braking resistor.

A mounting slot is provided in the Power Module.

Design

The Braking Module in chassis format is installed in a slot within the Power Module and force-cooled by its fan. The Braking Module is connected to the DC link by means of flexible cables, which are supplied as standard.

The Braking Module has as standard, the following interfaces:

- The DC link is connected through flexible cables
- Connecting terminal for external braking resistor
- 1 digital input (inhibit Braking Module with high signal/acknowledge error with negative edge high low)
- 1 digital output (Braking Module defective)
- DIP switch for adjusting the starting threshold

5.2.1.2 Safety instructions for Braking Modules chassis format

⚠ WARNING

Danger to life if the fundamental safety instructions and residual risks are not observed

The non-observance of the fundamental safety instructions and residual risks stated in Chapter 1 can result in accidents with severe injuries or death.

- Observe the fundamental safety instructions.
- Consider the residual risks for the risk evaluation.

⚠ DANGER

Danger to life due to electric shock caused by residual charge of the DC-link capacitors

Due to the DC-link capacitors, a hazardous voltage is present in the DC link for up to five minutes after the power supply has been switched off.

Touching live components results in death or severe injury.

- Only carry out work on these components after this time has elapsed.
- Measure the voltage before starting work on the DCP and DCN DC-link terminals.

⚠ WARNING

Risk of fire and device damage as a result of ground fault / short-circuit

The cables to the braking resistor must be routed so that a ground fault or short-circuit can be ruled out. A ground fault can result in fire with associated smoke.

- Comply with local installation regulations, which allow this fault to be ruled out.
- Protect the cables from mechanical damage.
- In addition, apply one of the following measures:
  - Use cables with double insulation.
  - Observe adequate clearances, e.g. through the use of spacers.
  - Route the cables in separate cable ducts or pipes.

NOTICE

Damage due to impermissible braking resistor

An impermissible braking resistor may become damaged.

- Only use braking resistors that SIEMENS has authorized for SINAMICS.

5.2.1.3 Braking Module for frame size FX

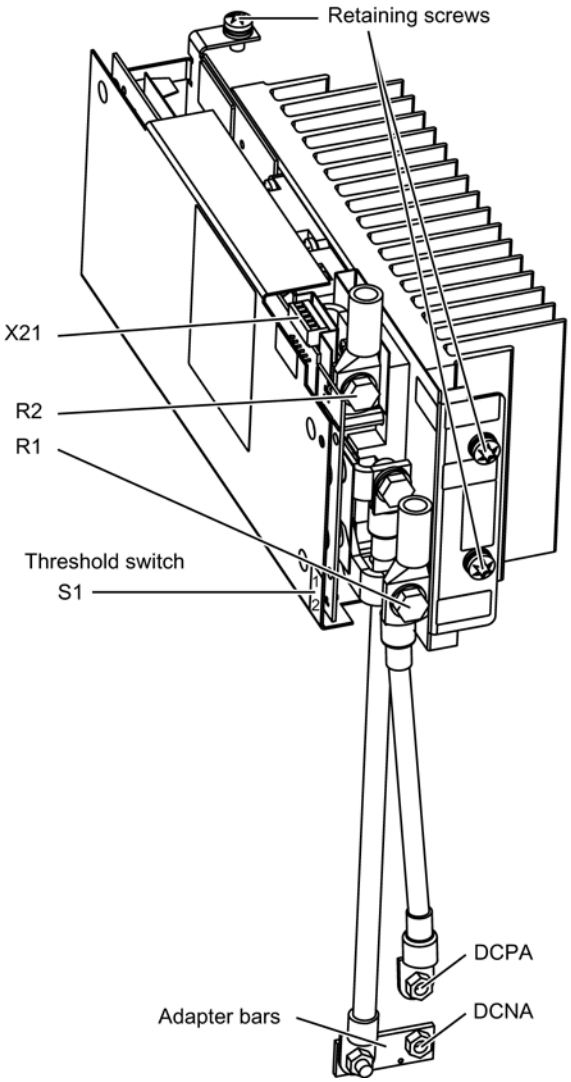

Figure 5-9 Braking Module for Power Module, frame size FX

Note

With this Braking Module, the R1 and DCPA interfaces use the same connection.

5.2.1.4 Braking Module for frame size GX

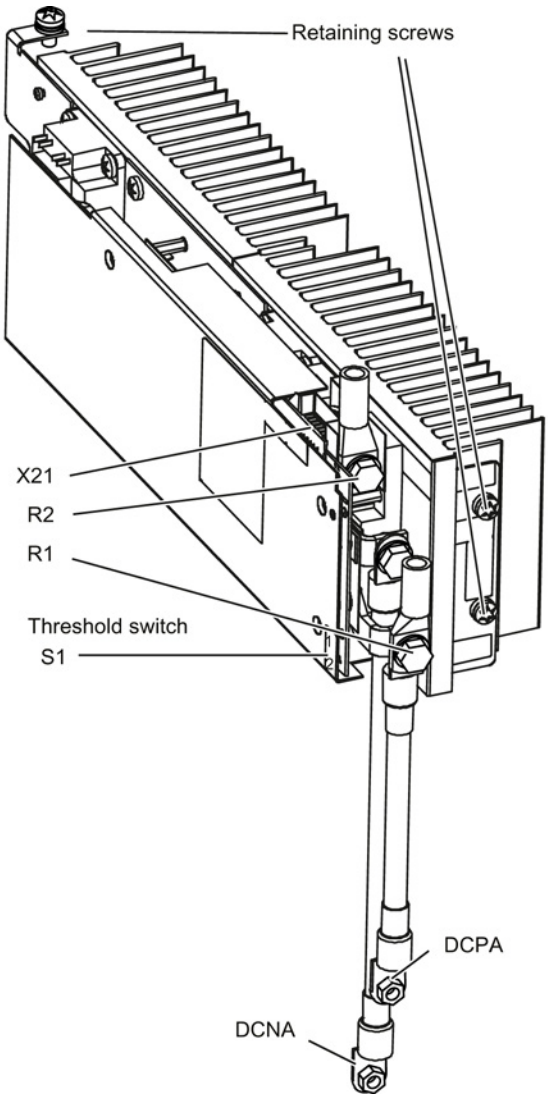

Figure 5-10 Braking Module for Power Module, frame size GX

Note

With this Braking Module, the R1 and DCPA interfaces use the same connection.

5.2.1.5 Connection example

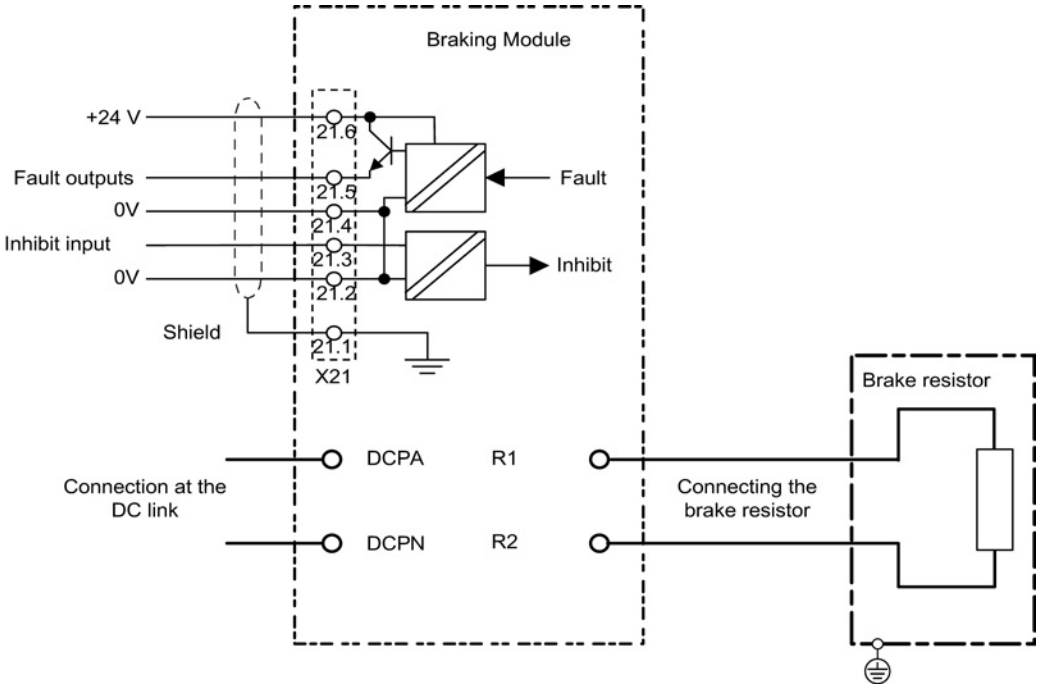

Figure 5-11 Example connection of Braking Module

5.2.1.6 Braking resistor connection X1

Table 5- 8 Braking resistor connection

Terminal	Designation
R1	Braking resistor connection R+
R2	Break resistor connection R-
Max. cross-section that can be connected: 50 mm ^{2}	

5.2.1.7 X21 digital inputs/outputs

Table 5- 9 Terminal block X21

	Terminal	Designation [1]	Technical data
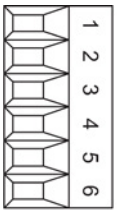	1	Shield	Shield connection for terminal 2 ... 6
	2	0 V	Low signal level: -3 … 5 V High signal level: 15 … 30 V Current consumption: 2 … 15 mA
	3	DI inhibit input	
	4	0 V	Voltage: 24 V DC Load current: 0.5 … 0.6 A
	5	DO fault output	
	6	+24 V	Voltage: 18 ... 30 V Typical current consumption (own current consumption): 10 mA at 24 V DC
Max. connectable cross-section 1.5 mm^2			

[1] DI: Digital input; DO: Digital output

Note

When the Braking Module is in the installed state, the individual terminals on its X21 terminal block are positioned as follows: terminal "1" is at the rear, terminal "6" at the front.

Note

Applying a high signal to terminal X21.3 inhibits the Braking Module. On a falling edge, pending error signals are acknowledged.

Note

You will find setting instructions for wiring the signals in the SINAMICS S120 Function Manual.

5.2.1.8 S1 Threshold switch

The response threshold at which the Braking Module is activated and the DC-link voltage generated during braking are specified in the following table.

⚠ WARNING

Danger to life due to electric shock when operating threshold switches

Operating the threshold switch when a voltage is present will cause death or serious injury.

- Only operate the threshold switch when the Power Module is switched off and the DC link capacitors are discharged.

Table 5- 10 Response thresholds of the Braking Modules

Response threshold	Switch position	Comment
673 V	1	774 V is the default factory setting. For line supply voltages of between 3-ph. 380 V and 400 V AC, the response threshold can be set to 673 V to reduce the voltage stress on the motor and Power Module. This does, however, reduce the possible braking power with the square of the voltage (673/774)² = 0.75. The maximum possible braking power is, therefore, 75%.
774 V	2	

Note

The threshold switches of the Braking Modules are in the following positions when installed:

- Position "1" is up
- Position "2" is down

5.2.1.9 Installing a Braking Module in a Power Module, frame size FX

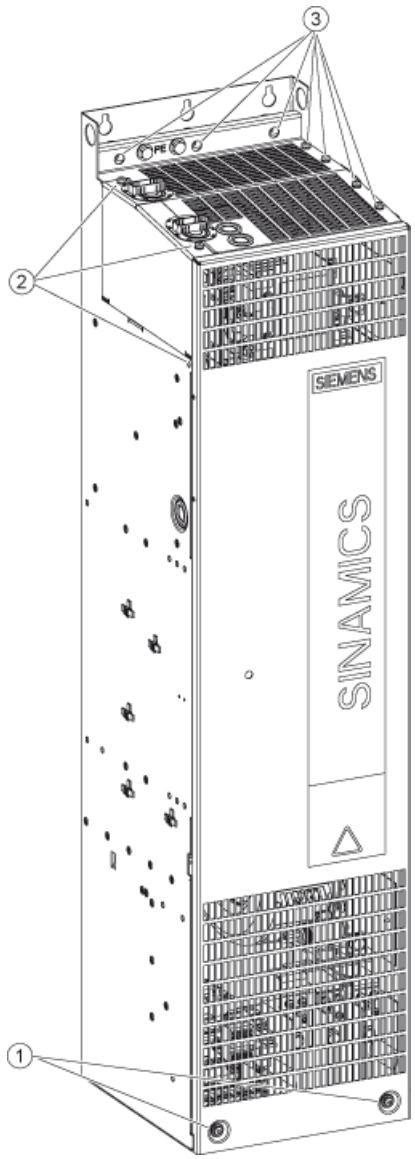	①	Loosen the two M6 screws. Remove the front cover to the top.
	②	Loosen the two screws from the cover plate at the top and the M6 nut on the left-hand side. Remove the cover plate at the left.
	③	Loosen the four screws from the cover plate at the top and the three securing screws at the rear. Remove the cover plate at the top.

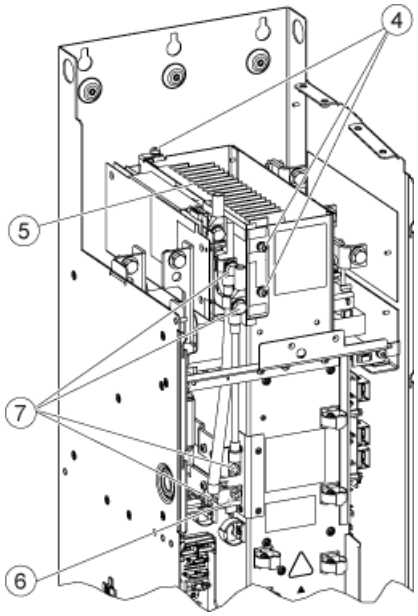	④	Remove the three screws on the blanking cover. Remove the blanking cover.
	⑤	Install the Braking Module instead of the blanking cover and secure it with the blanking cover screws that were previously removed.
	⑥	Secure the adapter bars at the DCNA connection using a nut, so that the bar cannot be twisted. For this purpose, a small bolt is attached to the adapter bar, which must be located on the lower side of the DCNA connection.
	⑦	Secure the connecting cable to the DC link with two screws (Braking Module connection) and with two nuts (DC-link connection).
		Attach the - cover plate, top - step ③ - cover plate, left - step ② - the front cover - step ①

An opening above the connections for the braking resistor (R1, R2) is provided in the cover for connecting the cable to the braking resistor.

Note

You must carefully observe the specified tightening torques.

5.2.1.10 Installing a Braking Module in a Power Module, frame size GX

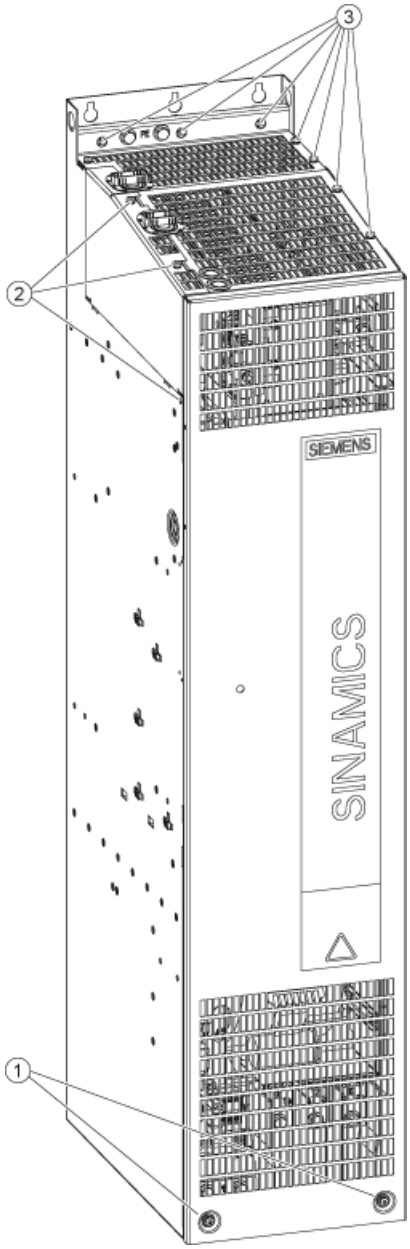	①	Loosen the two M6 screws. Remove the front cover to the top.
	②	Loosen the two screws from the cover plate at the top and the M6 nut on the left-hand side. Remove the cover plate at the left.
	③	Loosen the four screws from the cover plate at the top and the three securing screws at the rear. Remove the cover plate at the top.

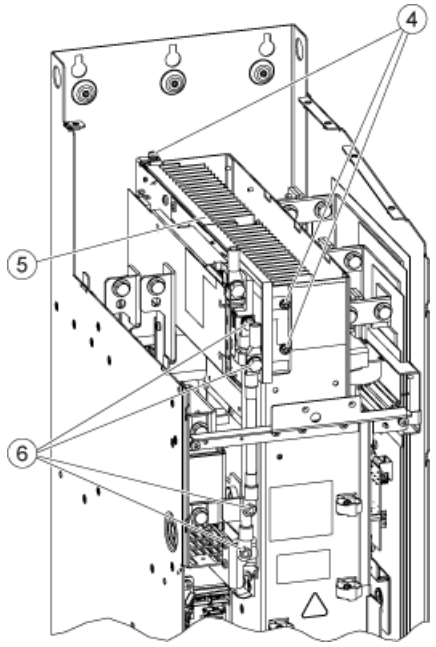	④	Remove the three screws on the blanking cover. Remove the blanking cover.
	⑤	Install the Braking Module instead of the blanking cover and secure it with the blanking cover screws that were previously removed.
	⑥	Secure the connecting cable to the DC link with two screws (Braking Module connection) and with two nuts (DC-link connection).
		Attach the - cover plate, top – step ③ - cover plate, left – step ② - the front cover – step ①

An opening above the connections for the braking resistor (R1, R2) is provided in the cover for connecting the cable to the braking resistor.

Note

You must carefully observe the specified tightening torques.

5.2.1.11 Technical data

Table 5- 11 Technical data, Braking Modules

Order number	6SL3300–1AE31-3AA0	6SL3300–1AE32-5AA0
Suitable for installation in Power Modules, frame size	FX	GX
P_{DB} power (unit rating)	25 kW	50 kW
P_{15} power (peak power)	125 kW	250 kW
P_{20} power	100 kW	200 kW
P_{40} power	50 kW	100 kW
Variable response thresholds	774 V (673 V)	774 V (673 V)
Digital input		
Rated voltage	-3 … 30 V	-3 … 30 V
Low signal level (an open digital input is interpreted as "low")	-3 … 5 V	-3 … 5 V
High level	15 … 30 V	15 … 30 V
Current drain (typical at 24 VDC)	10 mA	10 mA
Max. cross-section that can be connected	1.5 mm²	1.5 mm²
Digital output (continued-short-circuit-proof)		
Rated voltage	24 VDC	24 VDC
Max. load current of the digital output	500 mA	500 mA
Max. cross-section that can be connected	1.5 mm²	1.5 mm²
R1/R2 connection	M8 screw	M8 screw
Max. connection cross-section R1/R2	35 mm²	50 mm²
Weight	3.6 kg	7.3 kg

5.2.2 Braking resistors

5.2.2.1 Description

The braking resistor is used to reduce the excess DC link energy in regenerative operation.

The braking resistor is connected to the Braking Module. The braking resistor is mounted outside the cabinet or switchgear room. This means that the resulting heat loss around the Power Module can be dissipated - and cooling costs/equipment reduced.

Resistors with unit ratings of 25 kW and 50 kW are available.

Braking resistors can be used on Power Modules with a voltage range. This is the reason that the voltage can be changed by setting the response thresholds at the Braking Module to reduce the voltage stress on the motor and Power Module.

A temperature protection switch monitors the braking resistor for overtemperature and issues a signal on a floating contact if the limit value is exceeded.

5.2.2.2 Safety instructions for braking resistors chassis format

⚠ WARNING

Danger to life if the fundamental safety instructions and residual risks are not observed

The non-observance of the fundamental safety instructions and residual risks stated in Chapter 1 can result in accidents with severe injuries or death.

- Observe the fundamental safety instructions.
- Consider the residual risks for the risk evaluation.

⚠ DANGER

Danger to life due to electric shock caused by applied voltage and residual charge of the DC-link capacitors on the braking module

Contact with live connections on the Braking Module can result in death or serious injury.

- Only connect the Braking Module when the Power Module is disconnected.
- Only connect the Braking Module after five minutes has elapsed. Measure the voltage before starting work on the DCP and DCN DC-link terminals.

⚠ WARNING

Danger of fire through overheating for insufficient ventilation clearances

Insufficient ventilation clearances can result in overheating with danger to persons as a result of smoke and fire. Further, increased failures can occur and the service life of units/systems shortened.

- It is essential that you maintain a cooling clearance of 200 mm on all sides of the component (with ventilation grills).

WARNING

Risk of fire and device damage as a result of ground fault / short-circuit

The cables to the braking resistor must be routed so that a ground fault or short-circuit can be ruled out. A ground fault can result in fire with associated smoke.

- Comply with local installation regulations, which allow this fault to be ruled out.
- Protect the cables from mechanical damage.
- In addition, apply one of the following measures:
  - Use cables with double insulation.
  - Observe adequate clearances, e.g. through the use of spacers.
  - Route the cables in separate cable ducts or pipes.

CAUTION

Risk of burns resulting from high surface temperature of the braking resistor

The braking resistor can become very hot. You can be severely burnt when touching the surface.

- Mount the braking resistor so that it cannot be touched. If this is not possible, at the dangerous locations, attach an appropriate warning note that is clearly visible and easy to understand.

WARNING

Fire hazard due to overheating when permissible connection cable lengths are exceeded

Excessively long connection cables between the Braking Module and the external braking resistor may cause components to overheat with the associated risk of fire and smoke.

- The length of the connection cables between the Braking Module and the external braking resistor must not exceed 100 m.

WARNING

Fire hazard due to heat dissipation from a braking resistor

An incorrectly installed braking resistor can cause overheating of components with resulting fire and smoke.

- Only mount braking resistors on the floor.
- Mount the braking resistors so that they are in the vertical position and freestanding. Sufficient space must be available for dissipating the energy converted by the braking resistor.
- Maintain sufficient clearance to objects that can burn.
- Do not place any objects on or above the braking resistor.

NOTICE

Damage to braking resistor due to ingress of water

The ingress of water can damage the braking resistor.

- To maintain degree of protection IP20, provide a canopy to protect against rain when mounting outside.

Note

Interaction between braking resistor and fire detection sensor

If a braking resistor is placed underneath a fire detection sensor, the heat generated could trigger the fire detection sensor.

5.2.2.3 Dimension drawing

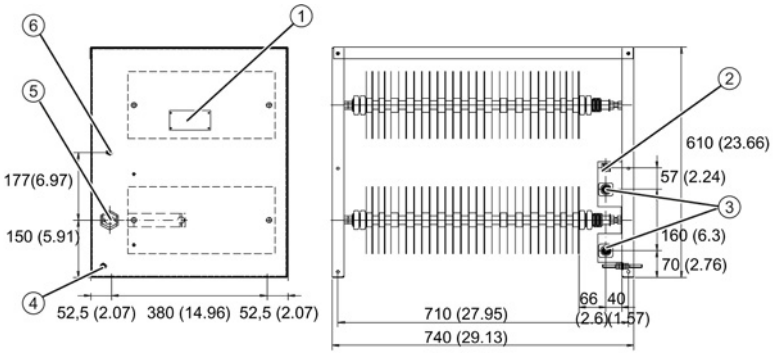

① Rating plate
② T1/T2 screw terminal (2.5 mm²)
③ Threaded bolt (M8)
④ Ground connection (M8)
⑤ M50
⑥ M12

Figure 5-12 Dimension drawing, 25 kW/125 kW resistor

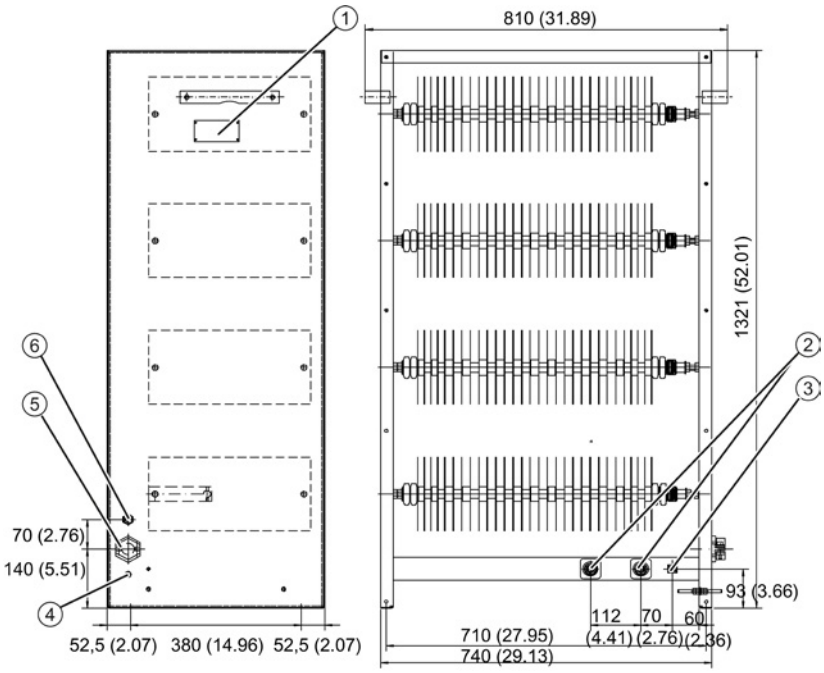

① Rating plate
② Threaded bolt (M10)
③ T1/T2 screw terminal (2.5 mm²)
④ Ground connection (M10)
⑤ M50
⑥ M12

Figure 5-13 Dimension drawing, 50 kW/250 kW resistor

5.2.2.4 Electrical connection

Recommended cable cross-sections:

- For 25 kW: 35 mm²
- For 50 kW: 50 mm²

Thermostatic switch

A thermostatic switch is installed to protect the braking resistor against overload. Its floating contacts must be integrated in the fault chain on the line side.

Table 5- 12 Thermostatic switch connection

Terminal	Function	Technical data
T1	Thermostatic switch connection	Voltage: 250 VAC Load current: max. 1 A
T2	Thermostatic switch connection	

Max. connectable cross-section: 2.5 mm²

5.2.2.5 Technical data

Table 5- 13 What is the technical data of the braking resistors

Order number	Unit	6SL3000–1BE31-3AA0	6SL3000–1BE32-5AA0
P_{DB} power (unit rating)	kW	25	50
P_{15} power (peak power)	kW	125	250
Max. current	A	189	378
Cable entry		Via cable gland M50	Via cable gland M50
Line connection		Via stud M10	Via stud M10
Max. cross-section that can be connected	mm²	50	70
Degree of protection		IP20	IP20
Width x height x depth	mm	740 x 605 x 485	810 x 1325 x 485
Thermostatic switch (NC contact) maximum contact load connecting cable		240 VAC / 10 A	240 VAC / 10 A
Weight	kg	50	120

Duty cycle

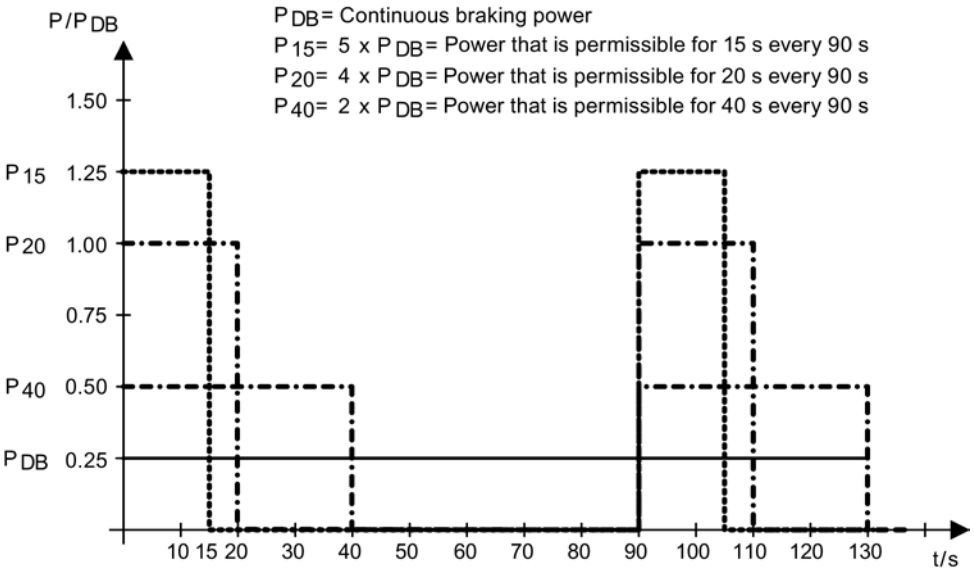

Figure 5-14 Duty cycle for braking resistors

Motor-side power components 6

6.1 Blocksize

6.1.1 Motor reactors

6.1.1.1 Description

Motor reactors reduce the voltage stress on the motor windings by reducing the voltage gradients at the motor terminals that occur when motors are fed from drive converters. At the same time, the capacitive re-charging currents that additionally load the output of the Power Module when longer motor cables are used are simultaneously reduced.

The motor reactors for Power Modules 380 V to 480 V 3 AC are suitable for a pulse frequency of 4 kHz. Higher pulse frequencies are not permissible.

6.1.1.2 Safety instructions for motor reactors

⚠ WARNING

Danger to life if the fundamental safety instructions and residual risks are not observed

The non-observance of the fundamental safety instructions and residual risks stated in Chapter 1 can result in accidents with severe injuries or death.

- Observe the fundamental safety instructions.
- Consider the residual risks for the risk evaluation.

⚠ DANGER

Danger to life due to electric shock in the event of missing touch protection

Death or serious injury can result when live parts are touched.

- For the motor reactors, use touch protection according to IPXXA or corresponding to the local installation regulations.

⚠ WARNING

Danger of fire through overheating for insufficient ventilation clearances

Insufficient ventilation clearances can result in overheating with danger to persons as a result of smoke and fire. Further, increased failures can occur and the service life of units/systems shortened.

- It is essential that you maintain 100 mm ventilation clearances above and below the component.

⚠ CAUTION

Risk of burns resulting from high surface temperature of the motor reactor

The motor reactors can become very hot. You can be severely burnt when touching the surface.

- Mount the motor reactors so that they cannot be touched. If this is not possible, at the dangerous locations, attach an appropriate warning note that is clearly visible and easy to understand.

NOTICE

Damage to the motor reactors by using components that have not been released

When using components that have not been released, damage or malfunctions can occur at the devices or the system itself. There is a risk that the motor reactor will be thermally damaged.

- Only use motor reactors that SIEMENS has released for SINAMICS.

NOTICE

Risk of damaging motor reactors by exceeding the maximum output frequency

The maximum permissible output frequency when motor reactors are used is 150 Hz. The motor reactors can be damaged if the output frequency is exceeded.

- Do not operate the motor reactors above the maximum permissible output frequency of 150 Hz.

NOTICE

Damage if the maximum pulse frequency is exceeded

The maximum permissible pulse frequency when motor reactors are used is 4 kHz. The motor reactors can be damaged if the pulse frequency is exceeded.

- Do not operate the motor reactors at the Power Module above the maximum permissible output frequency of 4 kHz.

Note

Keep the connecting cables to the Power Module as short as possible (max. 5 m).

6.1.1.3 Dimension drawings

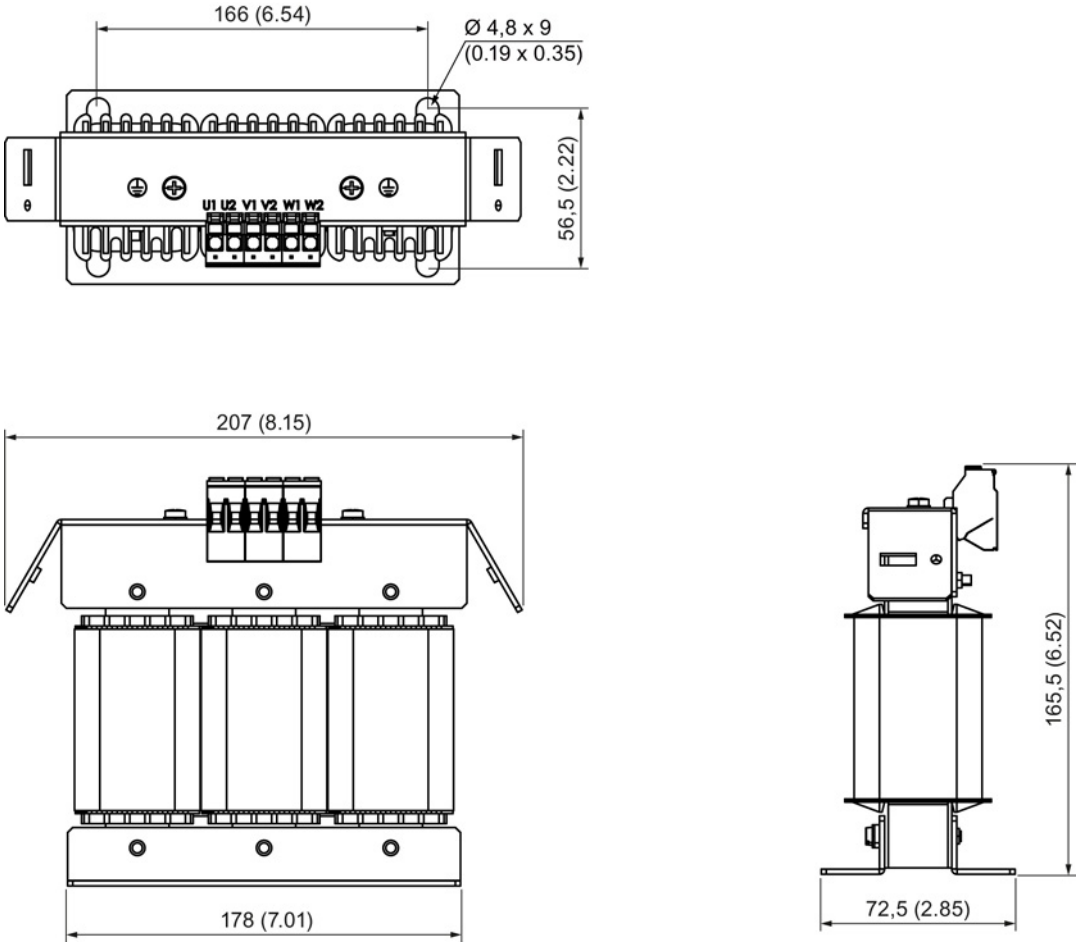

Figure 6-1 Dimension drawing of motor reactor, PM240-2 frame size FSA, all data in mm (inches)

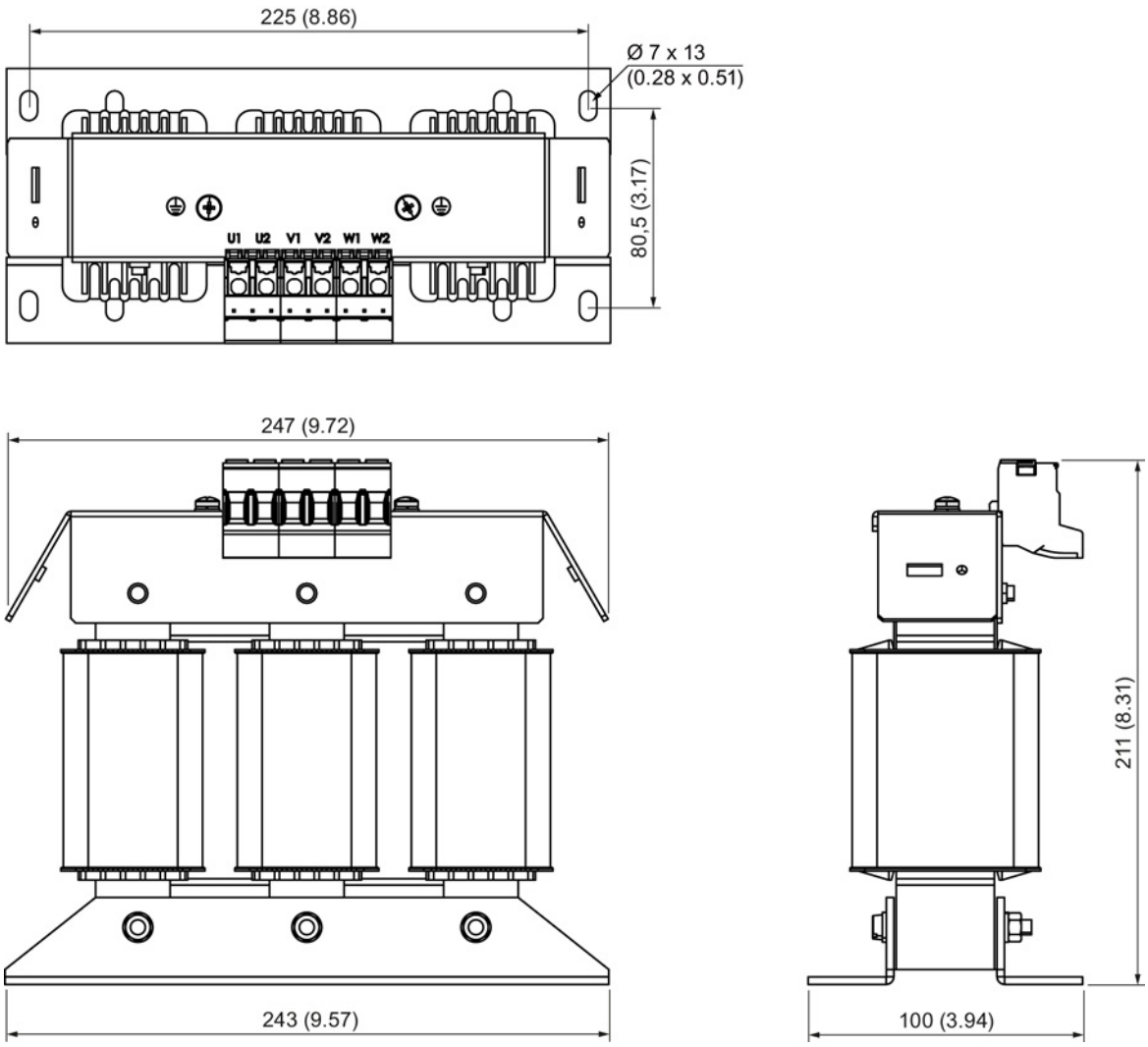

Figure 6-2 Dimension drawing of motor reactor, PM240-2 frame size FSB, all data in mm (inches)

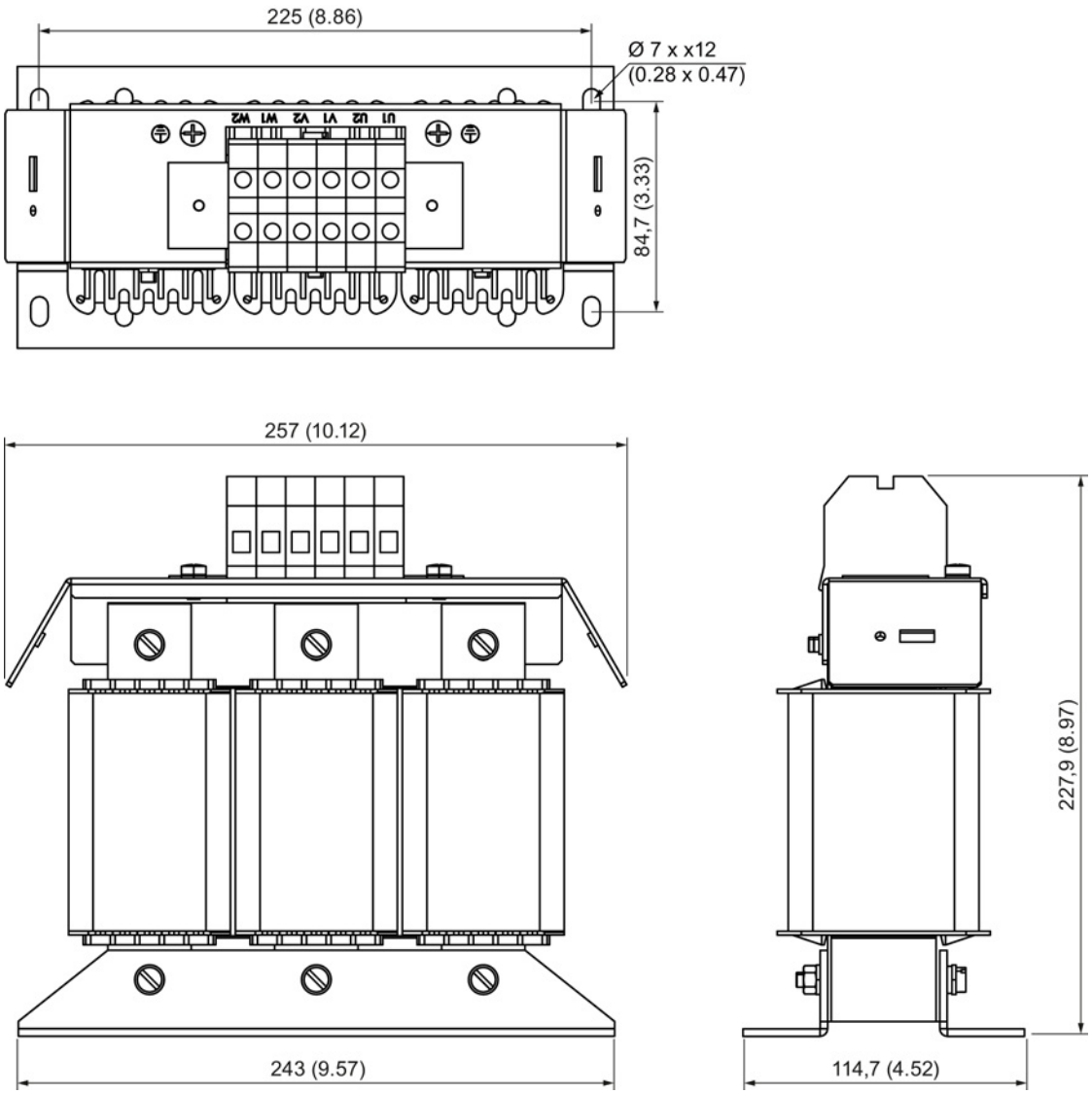

Figure 6-3 Dimension drawing of motor reactor, PM240-2 frame size FSC, all data in mm (inches)

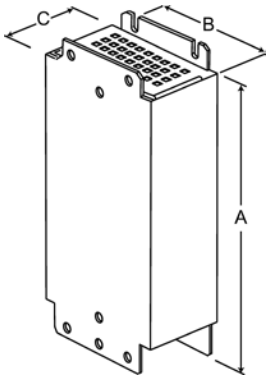

Figure 6-4 Dimension drawing motor reactor, PM340 frame size FSA

Table 6- 1 Dimensions of motor reactor, PM340 frame size FSA

Motor reactor 6SE6400-	3TC00-4AD2
Frame size	FSA
A in mm (inch)	200 (7.87)
B in mm (inch)	75.5 (2.97)
C in mm (inch)	110 (4.33)

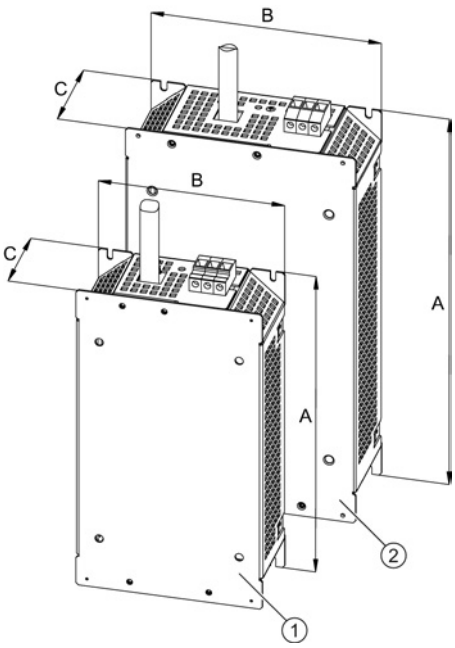

① Frame size FSB
② Frame size FSC

Figure 6-5 Dimension drawing of motor reactor, PM340 frame size FSB / FSC

Table 6- 2 Dimensions of motor reactor, PM340 frame size FSB / FSC

Motor reactor 6SL3202-	0AE21-0CA0	0AJ23-2CA0
Frame size	FSB	FSC
A in mm (inch)	270 (10.62)	334 (13.14)
B in mm (inch)	153 (6.02)	189 (7.44)
C in mm (inch)	70 (2.75)	50 (1.96)

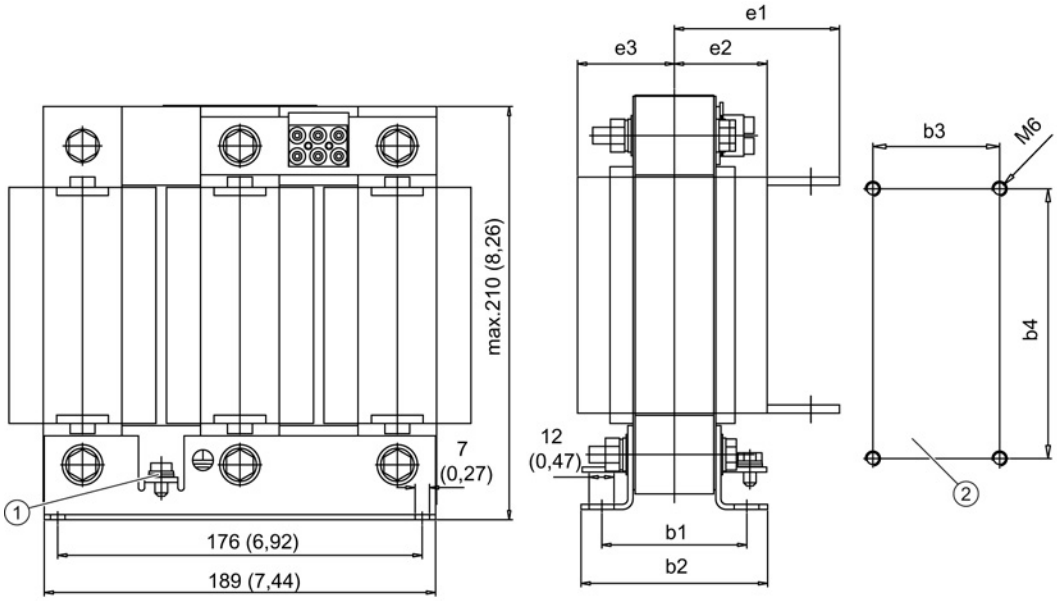

① Protective conductor connection (M6 x 12)

② Mounting hole

Figure 6-6 Dimension drawing of motor reactor, PM340 frame size FSD

Table 6- 3 Dimensions of motor reactor, PM340 frame size FSD in mm (inch)

Motor reactor 6SE6400-	3TC05-4DD0	3TC03-8DD0
Frame size	FSD	FSD
b1	70 (2.75)	94 (3.70)
b2	91 (3.58)	115 (4.52)
b3	70 (2.75)	94 (3.70)
b4	176 (6.92)	176 (6.92)
e1	91 (3.58)	103 (4.05)
e2	57 (2.24)	69 (2.71)
e3	49 (1.92)	61 (2.40)

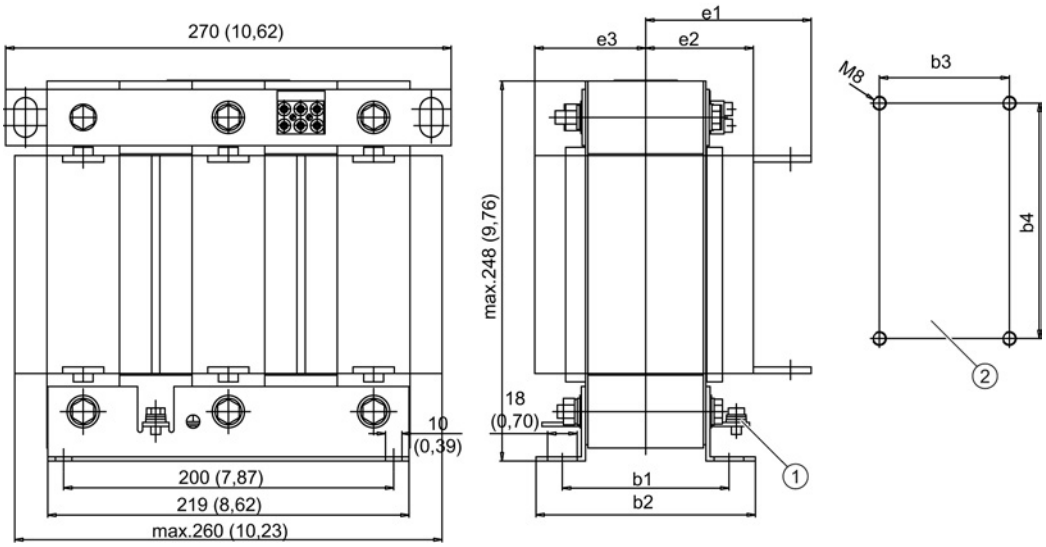

① Protective conductor connection (M 6x12)
② Mounting hole

Figure 6-7 Dimension drawing motor reactor, PM340 frame size FSE

Table 6- 4 Dimensions of motor reactor, PM340 frame size FSE in mm (inch)

Motor reactor 6SE6400-	3TC07-5ED0	3TC08-0ED0
Frame size	FSE	FSE
b1	101 (3.97)	70 (2.75)
b2	133 (5.23)	90 (3.54)
b3	101 (3.97)	70 (2.75)
b4	200 (7.87)	176 (6.92)
e1	110 (4.33)	89 $^{\pm 2}$ (3.50 $^{\pm 0.07}$)
e2	76 (2.99)	79 $^{\pm 2}$ (3.50 $^{\pm 0.07}$)
e3	68 (2.67)	-

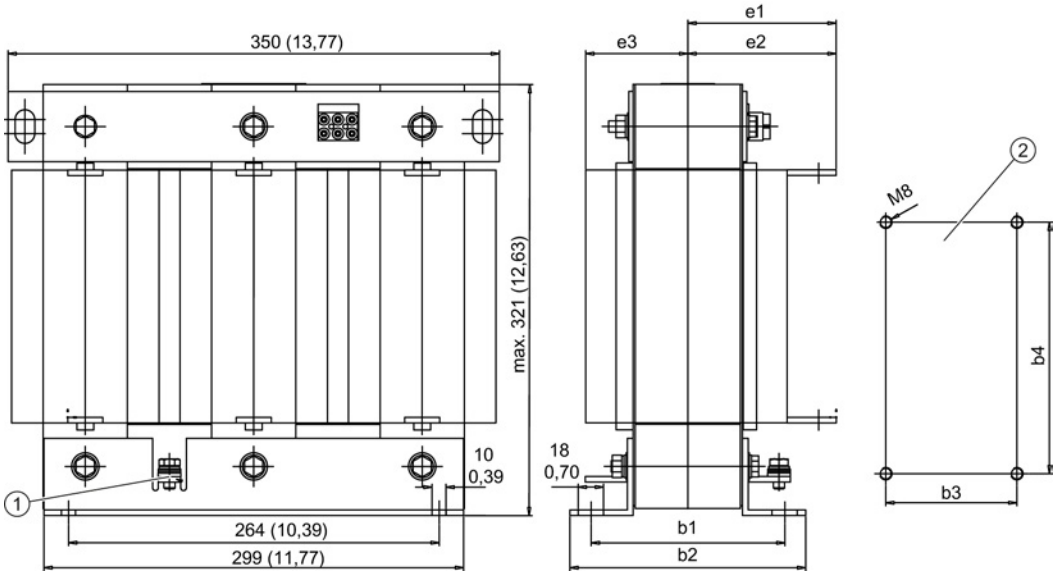

① Protective conductor connection (M 8x16)

② Mounting hole

Figure 6-8 Dimension drawing motor reactor, PM340 frame size FSF

Table 6- 5 Dimensions of motor reactor, PM340 frame size FSF in mm (inch)

Motor reactor 6SE6400-	3TC14-5FD0	3TC15-4FD0
Frame size	FSF	FSF
b1	138 (5.43)	101 (3.97)
b2	169 (6.65)	121 (4.76)
b3	138 (5.43)	101 (3.97)
b4	264 (10.39)	200 (7.87)
e1	131 (5.15)	119 ±2 (4.68 ±0.07)
e2	90 (3.54)	109 ±2 (4.29 ±0.07)
e3	78 (3.07)	-

6.1.1.4 Mounting

Note

The motor reactor must be mounted as close as possible to the Power Module.

Installation of motor reactors for PM240-2 Power Modules

The motor reactors for PM240-2 Power Modules of frame sizes FSA to FSC are designed for installation in a cabinet. The motor reactor is installed on the mounting surface next to the Power Module.

Table 6- 6 Mounting of motor reactors for PM240-2 Power Modules

Frame size	Fastening	Tightening torque
FSA	4 x M4 screws 4 x M4 nuts 4 x M4 washers	3 Nm
FSB	4 x M5 screws 4 x M5 nuts 4 x M5 washers	5 Nm
FSC		

Mounting of motor reactors for PM340 Power Modules

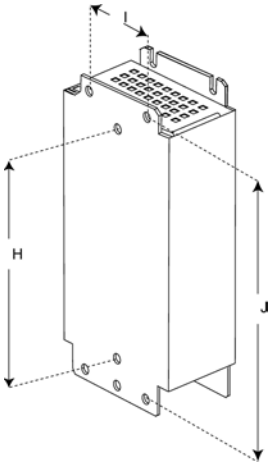

Figure 6-9 Mounting dimensions of motor reactor, frame size FSA

Table 6- 7 Mounting dimensions, motor reactor, frame size FSA in mm (inch)

Motor reactor 6SE6400-	3TC00-4AD2
Frame size	FSA
H	160 (6.29)
I	56 (2.20)
J	187 (7.36)
Tightening torque	1.1 Nm
Recommended minimum conductor cross-section	1 mm^2
Cable cross-section max.	2.5 mm^2

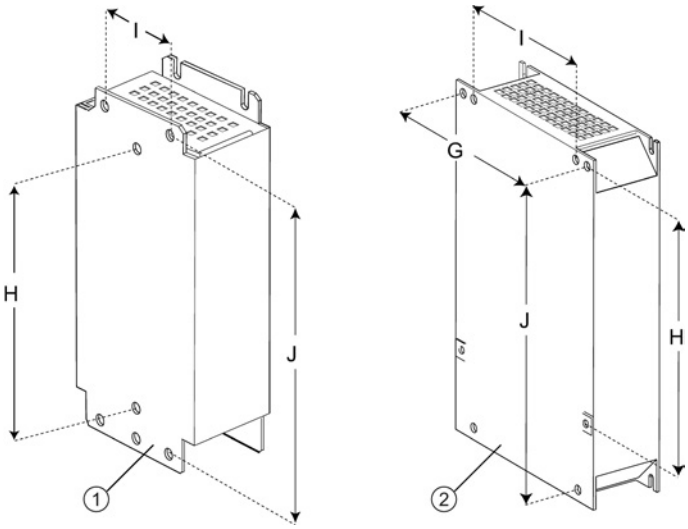

① Frame size FSB
② Frame size FSC

Figure 6-10 Mounting dimensions, motor reactors, frame sizes FSB / FSC

Table 6- 8 Mounting dimensions, motor reactors, frame sizes FSB / FSC in mm (inch)

Motor reactor	6SL3202-	0AE21-0CA0	0AJ23-2CA0
Frame size		FSB	FSC
Power Module	G	138 (5.43)	174 (6.85)
	H	258 (10.16)	204 (8.03)
Mounting surface	I	133 (5.24)	156 (6.14)
	J	258 (10.16)	232 (9.13)
Fixing screw		M4	M5
Tightening torque		1.5 Nm	2.25 Nm
Recommended minimum conductor cross-section		1.5 mm^2	2.5 mm^2
Cable cross-section max.		6 mm^2	10 mm^2

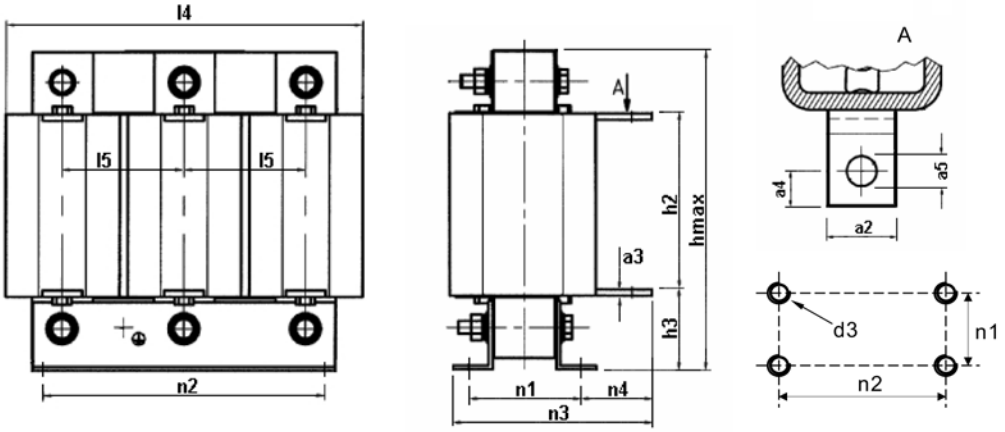

Figure 6-11 Mounting dimensions, motor reactors, frame sizes FSD / FSE / FSF

Table 6- 9 Mounting dimensions, motor reactors, frame sizes FSD / FSE in mm (inch)

Motor reactor	6SE6400-	3TC05-4DD0	3TC03-8DD0	3TC07-5ED0	3TC08-0ED0
Frame size		FSD	FSD	FSE	FSE
Motor reactor	a2	20 (0.78)	20 (0.78)	20 (0.78)	20 (0.78)
	a3	4 (0.15)	4 (0.15)	4 (0.15)	4 (0.15)
	a4	10 (0.39)	10 (0.39)	10 (0.39)	10 (0.39)
	a5	∅6 (0.23)	∅6 (0.23)	∅7 (0.27)	∅7
	l4	225 (8.85)	225 (8.85)	270 (10.62)	225 (8.85)
	l5	76 $^{\pm 5}$ (2.99 $^{\pm 0.19}$)	76 $^{\pm 5}$ (2.99 $^{\pm 0.19}$)	88 $^{\pm 5}$ (3.46 $^{\pm 0.19}$)	76 $^{\pm 5}$ (2.99 $^{\pm 0.19}$)
	h_{max}	210 (8.26)	210 (8.26)	248 (9.76)	210 (8.26)
	h2	120 $^{\pm 2}$ (4.72 $^{\pm 0.07}$)	120 $^{\pm 2}$ (4.72 $^{\pm 0.07}$)	140 $^{\pm 2}$ (5.51 $^{\pm 0.07}$)	120 $^{\pm 2}$ (4.72 $^{\pm 0.07}$)
	h3	45 $^{\pm 2}$ (1.77 $^{\pm 0.07}$)	45 $^{\pm 2}$ (1.77 $^{\pm 0.07}$)	50 ±2 (1.96 $^{\pm 0.07}$)	45 ±2 (1.77 $^{\pm 0.07}$)
	n1	70 (2.75)	94 (3.70)	101 (3.97)	70 (2.75)
	n2	176 (6.88)	176 (6.88)	200 (7.87)	176 (6.88)
	n3	max. 140 (5.51)	max. 164	max. 187.5 (7.38)	max. 140 (5.51)
	n4	54 $^{\pm 2}$ (2.12 $^{\pm 0.07}$)	54 $^{\pm 2}$ (2.12 $^{\pm 0.07}$)	68,5 $^{\pm 2}$ (2.69 $^{\pm 0.07}$)	54 $^{\pm 2}$ (2.12 $^{\pm 0.07}$)
	d3	M6	M6	M8	M6
	PE	M6	M6	M6	M6
Tightening torque		3.5 … 4.0 Nm	3.5 … 4.0 Nm	9.5 … 10.0 Nm 3.5 … 4.0 Nm	3.5 … 4.0 Nm

Table 6- 10 Mounting dimensions, motor reactor, frame size FSF in mm (inch)

Motor reactor	6SE6400-	3TC14-5FD0	3TC15-4FD0
Frame size		FSF	FSF
Motor reactor	a2	20 (0.78)	20 (0.78)
	a3	4 (0.15)	4 (0.15)
	a4	10 (0.39)	10 (0.39)
	a5	∅9 (0.35)	∅9 (0.35)
	l4	357 (14.05)	270 (10.62)
	l5	120 $^{\pm 5}$ (4.72 $^{\pm 0.19}$)	88 $^{\pm 5}$ (3.46 $^{\pm 0.19}$)
	h_{max}	321 (12.63)	248 (9.76)
	h2	185 $^{\pm 2}$ (7.28 $^{\pm 0.07}$)	140 $^{\pm 2}$ (5.51 $^{\pm 0.07}$)
	h3	60 $^{\pm 2}$ (2.36 $^{\pm 0.07}$)	50 $^{\pm 2}$ (1.96 $^{\pm 0.07}$)
	n1	138 (5.43)	101 (3.97)
	n2	264 (10.39)	200 (7.87)
	n3	max. 220.5 (8.68)	max. 187.5 (7.38)
	n4	65,5 $^{\pm 2}$ (2.57 $^{\pm 0.07}$)	68,5 $^{\pm 2}$ (2.69 $^{\pm 0.07}$)
	d3	M8	M8
	PE	M8	M6
Tightening torque		9.5 … 10.0 Nm	9.5 … 10.0 Nm 3.5 … 4.0 Nm

Mounting PM340 Power Module and motor reactors

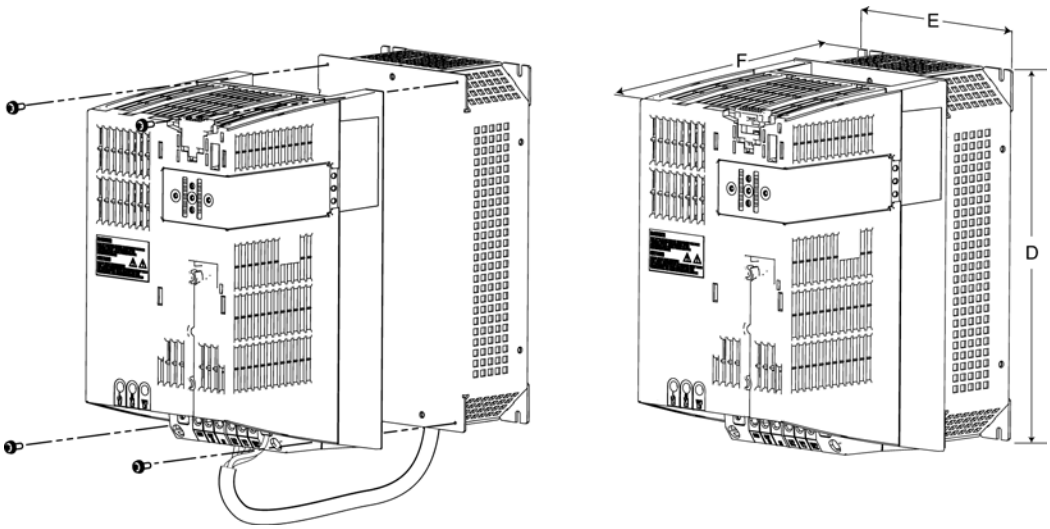

Figure 6-12 Mounting Power Modules and motor reactors, frame sizes FSB / FSC

Table 6- 11 Overall dimensions, PM340 Power Module and motor reactor, frame size FSA / FSB / FSC in mm (inch)

Motor reactor		6SE6400-3TC00-4AD3	6SE6400-3TC00-4AD2	6SL3202-0AE21-0CA0	6SL3202-0AJ23-2CA0
Frame size		FSA	FSA	FSB	FSC
Total dimension of the Power Module and motor reactor	D	200 (7.87)	200 (7.87)	270 (10.62)	334 (13.14)
	E	75,5 (2.97)	75,5 (2.97)	153 (6.02)	189 (7.44)
	F	259 (10.19)	259 (10.19)	235 (9.25)	245 (9.64)

6.1.1.5 Electrical connection

Electrical connection of PM240-2 Power Modules

Note
Approved cables
Use only 75° C copper cables.

Table 6- 12 Securing the connection cables to the motor reactor

Frame size	Terminal connection		PE connection	
	Max. cross-section that can be connected	Tightening torque	Fastening	Tightening torque
FSA	4 mm²	0.6 … 0.8 Nm	M4 screw	3 Nm
FSB	10 mm²	1.5 … 1.8 Nm	M5 screw	5 Nm
FSC	16 mm²	2.0 … 4.0 Nm	M5 screw	5 Nm

Electrical connection of PM340 Power Module

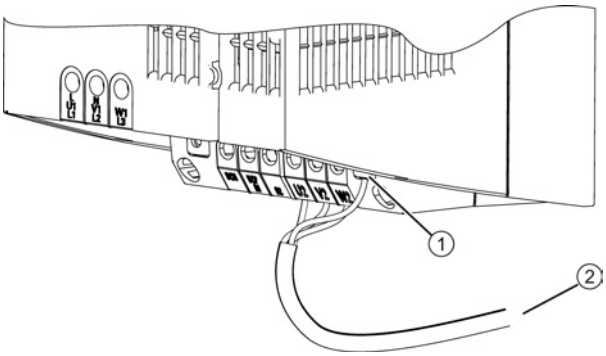

① PE connection
② Motor reactor

Figure 6-13 Electrical connection

6.1.1.6 Technical data

Table 6- 13 Motor reactors for PM240-2 Power Modules, frame size FSA to FSC

Order No. 6SL3202-		0AE16-1CA0	0AE18-8CA0	0AE21-8CA0	0AE23-8CA0
Frame size		FSA (2.2 kW)	FSA (4 kW)	FSB (7.5 kW)	FSC (18.5 kW)
Matching Power Modules[1]		Line voltage 1-phase 200 VAC -10% to 240 VAC +10%:			
		6SL3210- 1PB13-0xL0 1PB13-8xL0 1PB15-5xL0 6SL3211- 1PB13-8xL0	6SL3210- 1PB17-4xL0	6SL3210- 1PB21-0xL0 1PB21-4xL0 1PB21-8xL0 6SL3211- 1PB21-0xL0 1PB21-8xL0	6SL3210- 1PC22-2xL0 1PC22-8xL0 6SL3211- 1PB22-2xL0
		Line voltage 3-phase 380 VAC -10% to 480 VAC +10%:			
		6SL3210- 1PE11-8xL1 1PE12-3xL1 1PE13-2xL1 1PE14-3xL1 1PE16-1xL1	6SL3210- 1PE18-0xL1 6SL3211- 1PE18-0xL1	6SL3210- 1PE21-1xL0 1PE21-4xL0 1PE21-8xL0 6SL3211- 1PE21-8xL0	6SL3210- 1PE22-7xL0 1PE23-3xL0 6SL3211- 1PE23-3xL0
Inductance	mH	2,5	1,3	0,54	0,26
Rated current	A	6,1	9,0	18,5	39,0
Power loss	kW	0,09	0,08	0,08	0,11
Degree of protection		IP20	IP20	IP20	IP20
Weight	kg	3,4	3,9	10,1	11,2

[1] x = A: Power Module with integrated line filter, x = U: Power Module without integrated line filter

Table 6- 14 Motor reactors for PM340 Power Modules 3-phase 380 VAC to 480 VAC, frame size FSA

		Motor reactor (for a 4 kHz pulse frequency)				
Order number		**6SE6400-3TC00-4AD2**				
Frame size		FSA	FSA	FSA	FSA	FSA
Suitable for Power Module		6SL3210-1SE11-3UA0	6SL3210-1SE11-7UA0	6SL3210-1SE12-2UA0	6SL3210-1SE13-1UA0	6SL3210-1SE14-1UA0
Rated current	A	4,5				
Power loss	kW	0,005				
Connection to the Power Module		Cable 4 x 1.5 mm^2 Length approx. 0.3 m				
Motor connection		Screw terminals for cable cross-section 6 mm^2				
PE connection		M5 stud				
Max. permissible cable length between motor reactor and motor	m	100 (shielded) 150 (unshielded)				
Degree of protection		IP20 or IPXXB				
Weight, approx.	kg	2				
Rated current I_{rated} of the Power Module	A	1,3	1,7	2,2	3,1	4,1

Table 6- 15 Motor reactors for PM340 Power Modules 3-phase 380 VAC to 480 VAC, frame sizes FSB and FSC

		Motor reactor (for a 4 kHz pulse frequency)					
Order number		**6SL3202-0AE21-0CA0**			**6SL3202-0AJ23-2CA0**		
Frame size		FSB	FSB	FSB	FSC	FSC	FSC
Suitable for Power Module 6SL3210-		1SE16-0xxx	1SE17-7xxx	1SE21-0xxx	1SE21-8xxx	1SE22-5xxx	1SE23-2xxx
Rated current	A	10			25		
Power loss	kW	0,02			0,06		
Connection to the Power Module		Cable 4 x 1.5 mm^2 Length approx. 0.4 m			Cable 4 x 1.5 mm^2 Length approx. 0.35 m		
Motor connection		Screw-type terminals for cable cross-section 6 mm^2			Screw-type terminals for cable cross-sections 2.5 mm^2 to 10 mm^2		
PE connection		M5 stud			M5 stud		
Max. permissible cable length between motor reactor and motor	m	100 (shielded) 150 (unshielded)					
Degree of protection		IP20 or IPXXB					
Weight, approx.	kg	4,5			9		
Rated current $I_{rated}$of the Power Module	A	5,9	7,7	10	18	25	32

Table 6- 16 Motor reactors for PM340 Power Modules 3-phase 380 VAC to 480 VAC, frame sizes FSD and FSE

		Motor reactor (for a 4 kHz pulse frequency)				
Order no. 6SE6400-		**3TC05-4DD0**	**3TC03-8DD0**	**3TC05-4DD0**	**3TC08-0ED0**	**3TC07-5ED0**
Frame size		FSD	FSD	FSD	FSE	FSE
Suitable for Power Module 6SL3210- 6SL3215-		1SE23-8xxx 1SE23-8UAx	1SE24-5xxx	1SE26-0xxx 1SE26-0UAx	1SE27-5xxx 1SE27-5UAx	1SE31-0xxx 1SE31-0UAx
Rated current	A	68	45	68	104	90
Power loss	kW	0,2	0,2	0,2	0,17	0,27
Connection to the Power Module		Flat connector for M6 cable lug				
Motor connection		Flat connector for M6 cable lug				
PE connection		M6 screw				
Max. permissible cable length between motor reactor and motor	m	200 (shielded) 300 (unshielded)				
Degree of protection		IP00				
Weight, approx.	kg	11,5	19	11,5	12	27
Rated current I_{rated} of the Power Module	A	38	45	60	75	90

Table 6- 17 Motor reactors for PM340 Power Modules 3-phase 380 VAC to 480 VAC, frame size FSF

		Motor reactor (for a 4 kHz pulse frequency)		
Order no. 6SE6400-		**3TC14-5FD0**	**3TC15-4FD0**	**3TC14-5FD0**
Frame size		FSF	FSF	FSF
Suitable for Power Module 6SL3210- 6SL3215-		1SE31-1xxx 1SE31-1UAx	1SE31-5xxx	1SE31-8xxx 1SE31-8UAx
Rated current	A	178	178	178
Power loss	kW	0,47	0,25	0,47
Connection to the Power Module		Flat connector for M8 cable lug		
Motor connection		Flat connector for M8 cable lug		
PE connection		M8 screw		
Max. permissible cable length between motor reactor and motor	m	200 (shielded) 300 (unshielded)		
Degree of protection		IP00		
Weight, approx.	kg	57	24	57
Rated current I_{rated} of the Power Module	A	110	145	178

6.2 Chassis

6.2.1 Motor reactors

6.2.1.1 Description

Motor reactors reduce the voltage stress on the motor windings by reducing the voltage gradients at the motor terminals that occur when motors are fed from drive converters. At the same time, the capacitive charge/discharge currents that also occur on the output of the Motor Module when long motor cables are used are reduced.

Motor reactors can be operated in the VECTOR and SERVO control modes.

6.2.1.2 Safety instructions for motor reactors

⚠ WARNING

Danger to life if the fundamental safety instructions and residual risks are not observed

The non-observance of the fundamental safety instructions and residual risks stated in Chapter 1 can result in accidents with severe injuries or death.

- Observe the fundamental safety instructions.
- Consider the residual risks for the risk evaluation.

⚠ DANGER

Danger to life due to electric shock in the event of missing touch protection

Death or serious injury can result when live parts are touched.

- For the motor reactors, use touch protection according to IPXXA or corresponding to the local installation regulations.

⚠ WARNING

Danger of fire through overheating for insufficient ventilation clearances

Insufficient ventilation clearances can result in overheating with danger to persons as a result of smoke and fire. Further, increased failures can occur and the service life of units/systems shortened.

- It is essential that you maintain 100 mm ventilation clearances above and below the component.

⚠ CAUTION

Risk of burns resulting from high surface temperature of the motor reactor

The motor reactors can become very hot. You can be severely burnt when touching the surface.

- Mount the motor reactors so that they cannot be touched. If this is not possible, at the dangerous locations, attach an appropriate warning note that is clearly visible and easy to understand.

NOTICE

Damage to the motor reactors by using components that have not been released

When using components that have not been released, damage or malfunctions can occur at the devices or the system itself. There is a risk that the motor reactor will be thermally damaged.

- Only use motor reactors that SIEMENS has released for SINAMICS.

NOTICE

Risk of damaging motor reactors by exceeding the maximum output frequency

The maximum permissible output frequency when motor reactors are used is 150 Hz. The motor reactors can be damaged if the output frequency is exceeded.

- Do not operate the motor reactors above the maximum permissible output frequency of 150 Hz.

NOTICE

Damage if the maximum pulse frequency is exceeded

The maximum permissible pulse frequency when motor reactors are used is 4 kHz. The motor reactors can be damaged if the pulse frequency is exceeded.

- Do not operate the motor reactors at the Power Module above the maximum permissible output frequency of 4 kHz.

Note

Keep the connecting cables to the Power Module as short as possible (max. 5 m).

6.2.1.3 Dimension drawing

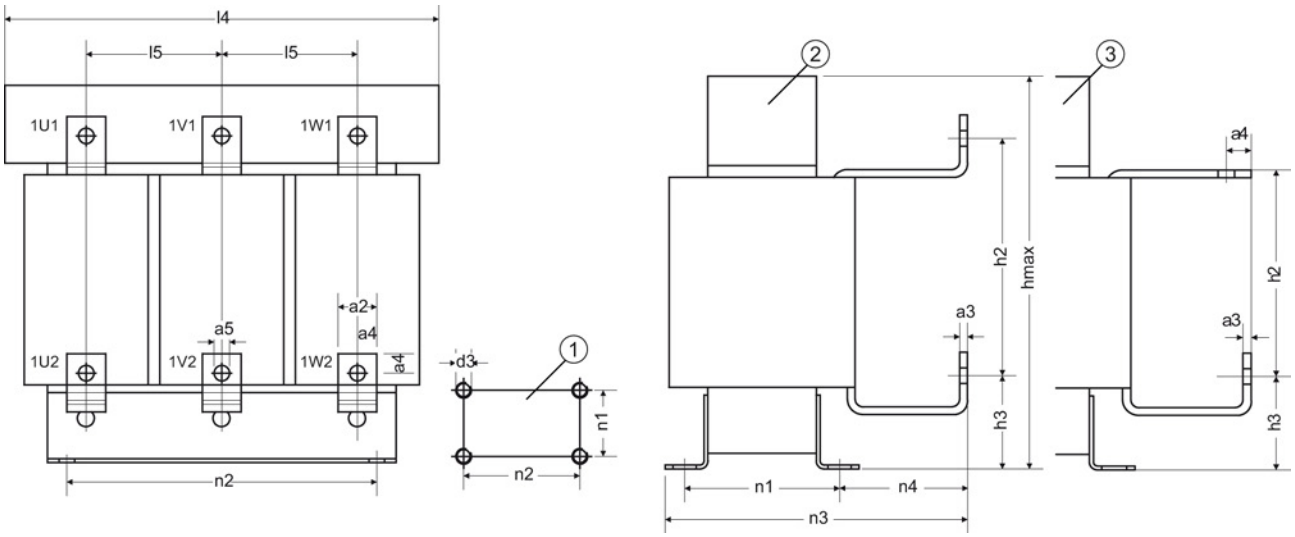

① Mounting hole
② Motor reactor type 1
③ Motor reactor type 2

Figure 6-14 Dimension drawing, motor reactor

6SL3000-	2BE32-1AA0	2BE32-6AA0	2BE33-2AA0	2BE33-8AA0	2BE35-0AA0
Connection type	1	1	1	1	2
a2	25 (0.98)	25 (0.98)	25 (0.98)	25 (0.98)	30 (1.18)
a3	5 (0.19)	5 (0.19)	5 (0.19)	5 (0.19)	6 (0.23)
a4	12.5 (0.49)	12.5 (0.49)	12.5 (0.49)	12.5 (0.49)	15 (0.59)
a5	11 (0.43)	11 (0.43)	11 (0.43)	11 (0.43)	14 (0.55)
l4	300 (11.81)	300 (11.81)	300 (11.81)	300 (11.81)	300 (11.81)
l5	100 (3.93)	100 (3.93)	100 (3.93)	100 (3.93)	100 (3.93)
hmax	285 (11.22)	315 (12.40)	285 (11.22)	285 (11.22)	365 (14.37)
h2	194 (7.63)	227 (8.93)	194 (7.63)	194 (7.63)	245 (9.64)
h3	60 (2.36)	60 (2.36)	60 (2.36)	60 (2.36)	60 (2.36)
n1 [1)]	163 (6.41)	183 (7.20)	163 (6.41)	183 (7.20)	183 (7.20)
n2 [1)]	224 (8.81)	224 (8.81)	224 (8.81)	224 (8.81)	224 (8.81)
n3	257 (10.11)	277 (10.90)	257 (10.11)	277 (10.90)	277 (10.90)
n4	79 (3.11)	79 (3.11)	79 (3.11)	79 (3.11)	79 (3.11)
d3	M8	M8	M8	M8	M8

[1)] Lengths n1 and n2 correspond to the distance between holes.

6.2.1.4 Technical data

Table 6- 18 Technical data, motor reactors

Order number	6SL3000-	2BE32-1AA0	2BE32-6AA0	2BE33-2AA0	2BE33-8AA0	2BE35-0AA0
Suitable for Power Module	6SL3310-	1TE32-1AAx	1TE32-6AAx	1TE33-1AAx	1TE33-8AAx	1TE35-0AAx
Unit rating of the Power Module	kW	110	132	160	200	250
Rated current	A	210	260	310	380	490
Power loss - at 50 Hz - at 150 Hz	 kW kW	 0,436 0,486	 0,454 0,5	 0,422 0,47	 0,447 0,5	 0,448 0,5
Connections - to the Motor Module (1U1, 1V1, 1W1) - to the load (1U2, 1V2, 1W2) - PE		 M10 M10 M8	 M10 M10 M8	 M10 M10 M8	 M10 M10 M8	 M12 M12 M8
Max. permissible cable length between motor reactor and motor - with 1 motor reactor - with 2 motor reactors in series	 m m	300 (shielded) / 450 (unshielded) 525 (shielded) / 787 (unshielded)				
Degree of protection		IP00	IP00	IP00	IP00	IP00
Dimensions Width Height Depth	 mm mm mm	 300 285 257	 300 315 277	 300 285 257	 300 285 277	 300 365 277
Weight	kg	66	66	66	73	100

6.2.2 Sinusoidal filter

6.2.2.1 Description

The sine-wave filter at the output of the Power Module supplies voltages that are virtually sinusoidal at the motor, thereby enabling standard motors to be used without shielded cables and without the need to reduce the power. Non-shielded cables can be used and, if long motor supply cables are used, no additional motor reactors are required.

Sine-wave filters with a power rating of up to 200 kW are available

The pulse frequency of the Power Modules must be set to 4 kHz for the sine-wave filters. This reduces the output current of the Power Module, see Chapter Characteristics (Page 174).

When a sine-wave filter is used, the available output voltage decreases by 15%.

6.2.2.2 Safety instructions for sine-wave filter chassis format

⚠ WARNING

Danger to life if the fundamental safety instructions and residual risks are not observed

The non-observance of the fundamental safety instructions and residual risks stated in Chapter 1 can result in accidents with severe injuries or death.

- Observe the fundamental safety instructions.
- Consider the residual risks for the risk evaluation.

⚠ DANGER

Danger to life due to electric shock in the event of missing touch protection

Death or serious injury can result when live parts are touched.

- For the sinus filters, use touch protection according to IPXXA or corresponding to the local installation regulations.

⚠ WARNING

Danger of fire through overheating for insufficient ventilation clearances

Insufficient ventilation clearances result in overheating with danger to persons as a result of smoke and fire. Further, increased failures can occur and the service life of units/systems shortened.

- It is essential that you maintain 100 mm ventilation clearances above and below the component.

⚠ CAUTION

Risk of burns resulting from high surface temperature of the sine-wave filter

The sine-wave filters can have surface temperatures of over 80° C. You can be severely burnt when touching the surface.

- Mount the sine-wave filter so that it cannot be touched. If this is not possible, at the dangerous locations, attach an appropriate warning note that is clearly visible and easy to understand.

NOTICE

Sine-wave filter damage due to interchanged connections

Interchanging the input and output connections will damage the sine-wave filter.

- Connect the incoming cable from the Power Modules to 1U1, 1V1, 1W1.
- Connect the outgoing cable to the load at 1U2, 1V2, 1W2.

NOTICE

Damage to the Power Module by using components that have not been released

When using components that have not been released, damage or malfunctions can occur at the devices or the system itself.

- Only use sine-wave filters that SIEMENS has released for SINAMICS.

NOTICE

Risk of damaging sine-wave filter by exceeding the maximum output frequency

The maximum permissible output frequency when sine-wave filters are used is 150 Hz. The sine-wave filter can be damaged if the output frequency is exceeded.

- When commissioning, you must always activate the sine-wave filter connected to the Power Module (see SINAMICS S120/S150 List Manual).

NOTICE

Damage to the sine-wave filter if a motor is not connected

Sine-wave filters, which are operated without a motor being connected, can be damaged or destroyed.

- Never operate a sine-wave filter connected to the Power Module without a connected motor.

Note

Keep the connecting cables to the Power Module as short as possible (max. 5 m).

6.2.2.3 Dimension drawing

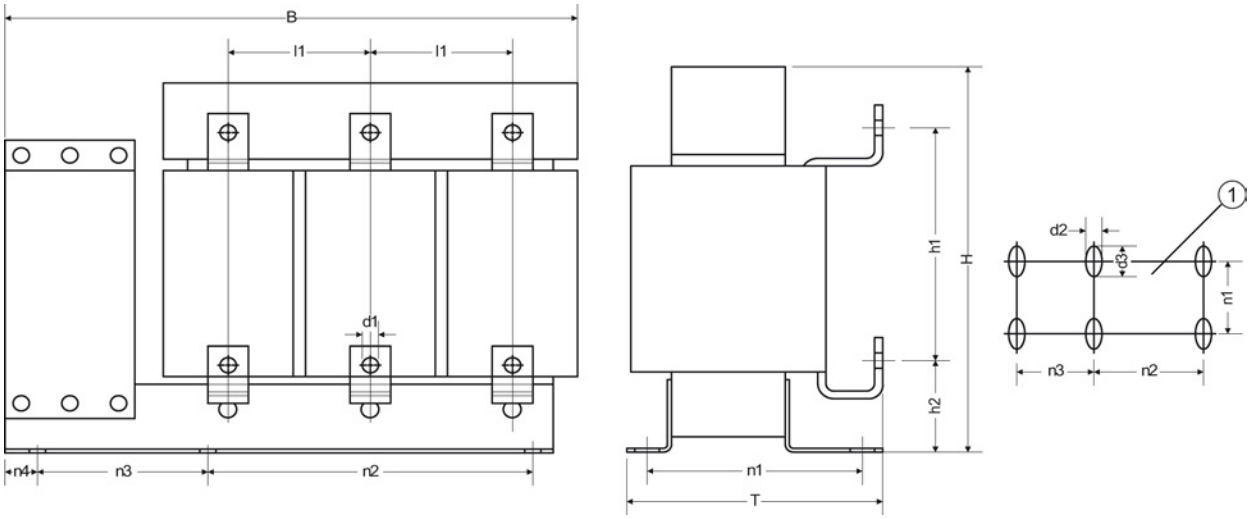

① Mounting hole

Figure 6-15 Dimension drawing, sine-wave filter

Table 6- 19 Dimensions, sine-wave filter in mm (inches)

6SL3000-	2CE32-3AA0	2CE32-8AA0	2CE33-3AA0	2CE34-1AA0
B	620 (24.40)	620 (24.40)	620 (24.40)	620 (24.40)
H	300 (11.81)	300 (11.81)	370 (14.56)	370 (14.56)
D	320 (12.59)	320 (12.59)	360 (14.17)	360 (14.17)
l1	140 (5.51)	140 (5.51)	140 (5.51)	140 (5.51)
h1	180 (7.08)	180 (7.08)	220 (8.66)	220 (8.66)
h2	65 (3.34)	65 (3.34)	65 (3.34)	65 (3.34)
n1 [1)]	280 (11.02)	280 (11.02)	320 (12.59)	320 (12.59)
n2 [1)]	150 (5.90)	150 (5.90)	150 (5.90)	150 (5.90)
n3[1)]	225 (8.85)	225 (8.85)	225 (8.85)	225 (8.85)
n4	105 (4.13)	105 (4.13)	105 (4.13)	105 (4.13)
d1	12 (0.47)	12 (0.47)	12 (0.47)	12 (0.47)
d2	11 (0.43)	11 (0.43)	11 (0.43)	11 (0.43)
d3	22 (0.86)	22 (0.86)	22 (0.86)	22 (0.86)

[1)] Dimensions n1, n2, n3 correspond to the hole spacing.

6.2.2.4 Technical data

Table 6- 20 Technical data, sine-wave filter

Order number	6SL3000-	2CE32-3AA0	2CE32-3AA0	2CE32-8AA0	2CE33-3AA0	2CE34-1AA0
Suitable for Power Module	6SL3310-	1TE32-1AAx	1TE32-6AAx	1TE33-1AAx	1TE33-8AAx	1TE35-0AAx
Unit rating of the Power Module at a 4 kHz pulse frequency	kW	90	110	132	160	200
Rated current	A	225	225	276	333	408
Power loss - at 50 Hz - at 150 Hz	 kW kW	 0,35 0,6	 0,35 0,6	 0,4 0,69	 0,245 0,53	 0,38 0,7
Connections - to the Power Module - to the load - PE		 M10 connecting lugs M10 connecting lugs M10 drill hole				
Max. permissible cable length between sine-wave filter and motor	m	300 (shielded) 450 (unshielded)				
Degree of protection		IP00	IP00	IP00	IP00	IP00
Dimensions Width Height Depth	 mm mm mm	 620 300 320	 620 300 320	 620 300 320	 620 370 360	 620 370 360
Weight, approx.	kg	124	124	127	136	198

6.2.3 dv/dt filter plus Voltage Peak Limiter

6.2.3.1 Description

The dV/dt filter plus Voltage Peak Limiter consists of two components: the dV/dt reactor and the voltage limiting network (Voltage Peak Limiter), which limits voltage peaks and returns the energy to the DC link.

The dV/dt filters with Voltage Peak Limiter must be used for motors for which the proof voltage of the insulation system is unknown or insufficient. Standard motors of the 1LA5, 1LA6 and 1LA8 series only require them at supply voltages > 500 V +10 %.

dV/dt filters plus Voltage Peak Limiters limit the rate of voltage rise to values < 500 V/µs and the typical voltage peaks with rated line voltages to the values below (with motor cable lengths less than 150 m):

< 1000 V at V_{line} < 575 V.

Components

The order numbers of the individual components (dV/dt reactor and Voltage Peak Limiter) are listed in the following table:

Table 6- 21 dV/dt filter with Voltage Peak Limiter, order numbers of the individual components

dV/dt filter plus Voltage Peak Limiter	dV/dt reactor	Voltage peak limiter
6SL3000-2DE32-6AA0	6SL3000-2DE32-6CA0	6SL3000-2DE32-6BA0
6SL3000-2DE35-0AA0	6SL3000-2DE35-0CA0	6SL3000-2DE35-0BA0

6.2.3.2 Safety instructions for du/dt filter plus Voltage Peak Limiter

⚠ WARNING

Danger to life if the fundamental safety instructions and residual risks are not observed

The non-observance of the fundamental safety instructions and residual risks stated in Chapter 1 can result in accidents with severe injuries or death.

- Observe the fundamental safety instructions.
- Consider the residual risks for the risk evaluation.

⚠ DANGER

Danger to life due to electric shock in the event of missing touch protection

Death or serious injury can result when live parts are touched.

- For the dV/dt filter plus Voltage Peak Limiter, use touch protection according to IPXXA or corresponding to the local installation regulations.

WARNING

Danger to life caused by high discharge currents when the external protective conductor is interrupted

dV/dt filters plus Voltage Peak Limiter result in a high discharge current via the protective conductor. When the protective conductor is interrupted, touching live components can result in electric shock, which can lead to death or serious injuries.

- Ensure that the external protective conductor complies with at least one of the following conditions:
  - It is laid protected against mechanical damage.[1)]
  - For an individual core, it has a cross-section of at least 10 mm² Cu.
  - As core of a multi-core cable, it has a cross-section of at least 2.5 mm² Cu.
  - It has a parallel, second protective conductor with the same cross-section.
  - It corresponds to the local regulations for equipment with increased leakage current.

  [1)] Cables routed in control cabinets or enclosed machine enclosures are considered to be adequately protected against mechanical damage.

WARNING

Risk of fire and device damage as a result of ground fault / short-circuit

The connection to the DC link of the Power Module must be routed so that a ground fault or short-circuit can be ruled out. A ground fault can result in fire with associated smoke.

- Comply with local installation regulations, which allow this fault to be ruled out.
- Protect the cables from mechanical damage.
- In addition, apply one of the following measures:
  - Use cables with double insulation.
  - Observe adequate clearances, e.g. through the use of spacers.
  - Route the cables in separate cable ducts or pipes.

WARNING

Danger of fire through overheating for insufficient ventilation clearances

Insufficient ventilation clearances result in overheating with danger to persons as a result of smoke and fire. Further, increased failures can occur and the service life of units/systems shortened.

- It is essential that you maintain 100 mm ventilation clearances above and below the component.

CAUTION

Risk of burns resulting from high surface temperature of the dV/dt reactor

The surface temperatures of dV/dt reactors can exceed 80° C. You can be severely burnt when touching the surface.

- Mount the dV/dt reactors so that they cannot be touched. If this is not possible, at the dangerous locations, attach an appropriate warning note that is clearly visible and easy to understand.

NOTICE

Damage to the Voltage Peak Limiter due to interchanged connections

Interchanging the connections on the Voltage Peak Limiter will cause damage to it.

- Connect the cable from the DC link of the Power Module to DCPS, DCNS.
- Connect the cable to the dV/dt reactor at 1U2, 1V2, 1W2.

NOTICE

Damage to the dV/dt filter by using components that have not been released

When using components that have not been released, damage or malfunctions can occur at the devices or the system itself.

- Only use dV/dt filters that SIEMENS has approved for operation with SINAMICS.

NOTICE

Damage to the dV/dt filter by exceeding the maximum output frequency

The maximum permissible output frequency when using dV/dt filters plus Voltage Peak Limiter is 150 Hz. The dV/dt filter may be damaged or destroyed if the output frequency is exceeded.

- When commissioning you must always activate the dV/dt filter plus Voltage Peak Limiter connected to the Power Module during commissioning (see SINAMICS S120/S150 List Manual).

NOTICE

Damage to the dV/dt filter by exceeding the maximum pulse frequency

The maximum permissible pulse frequency on the Power Module is 4 kHz when a dV/dt filter is used. The dV/dt filter may be damaged or destroyed if the pulse frequency is exceeded.

- When using a dV/dt filter, do not operate a Power Module above the maximum pulse frequency of 4 kHz.

NOTICE

Damage to the dV/dt filter if motor is not connected

If the drive is operated without the motor being connected, the dV/dt filter plus the Voltage Peak Limiter may be damaged or destroyed.

- Never operate drives with dV/dt filters plus Voltage Peak Limiter without a motor being connected.

Note

Keep the connecting cables to the Power Module as short as possible (max. 5 m).

6.2.3.3 Interface description

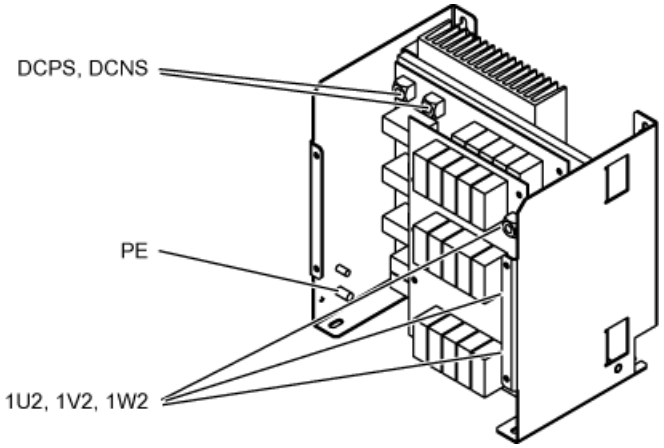

Figure 6-16 Interface overview, Voltage Peak Limiter, type 1

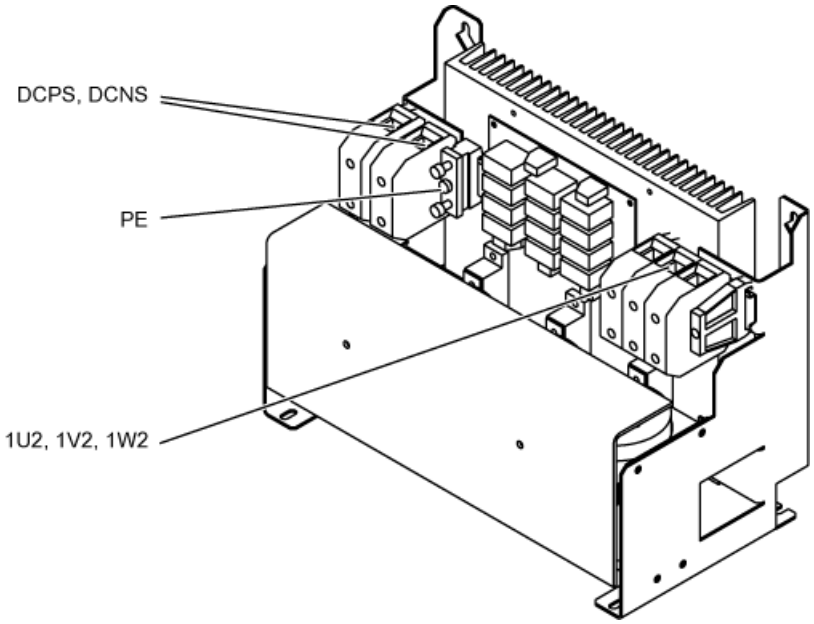

Figure 6-17 Interface overview, Voltage Peak Limiter, type 2

6.2.3.4 Connecting the dv/dt filter plus Voltage Peak Limiter

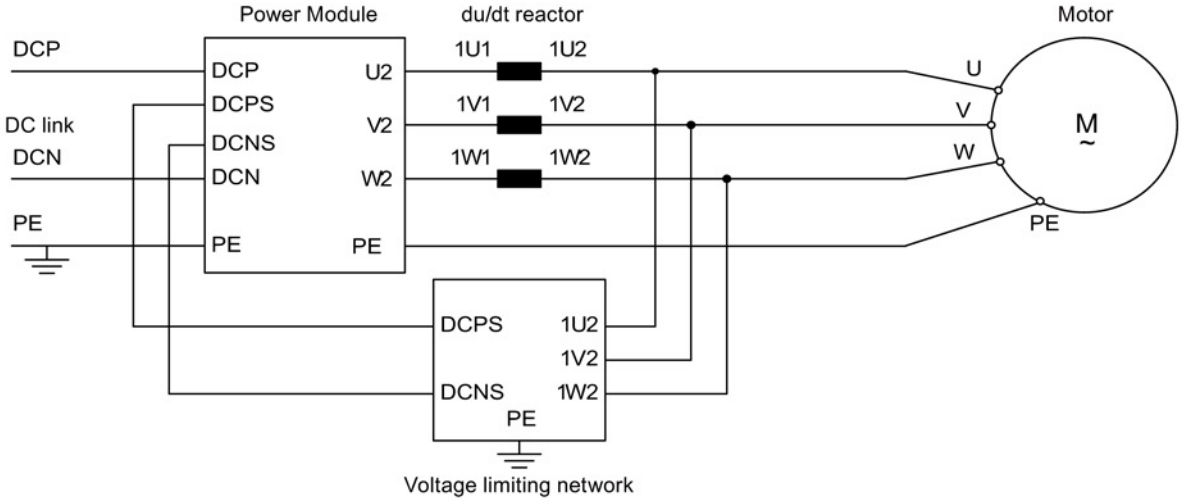

Figure 6-18 Connecting the dV/dt filter plus Voltage Peak Limiter

Cable cross-sections

Table 6- 22 Cable cross-sections for connections between a dV/dt filter and Power Module

dV/dt filter plus Voltage Peak Limiter	Connection to the DC link (DCPS / DCNS) [mm²]	Connection between a dV/dt reactor and Voltage Peak Limiter (1U2, 1V2, 1W2) [mm²]
6SL3000-2DE32-6AA0	35	10
6SL3000-2DE35-0AA0	70	16

6.2.3.5 Dimension drawing, dv/dt reactor

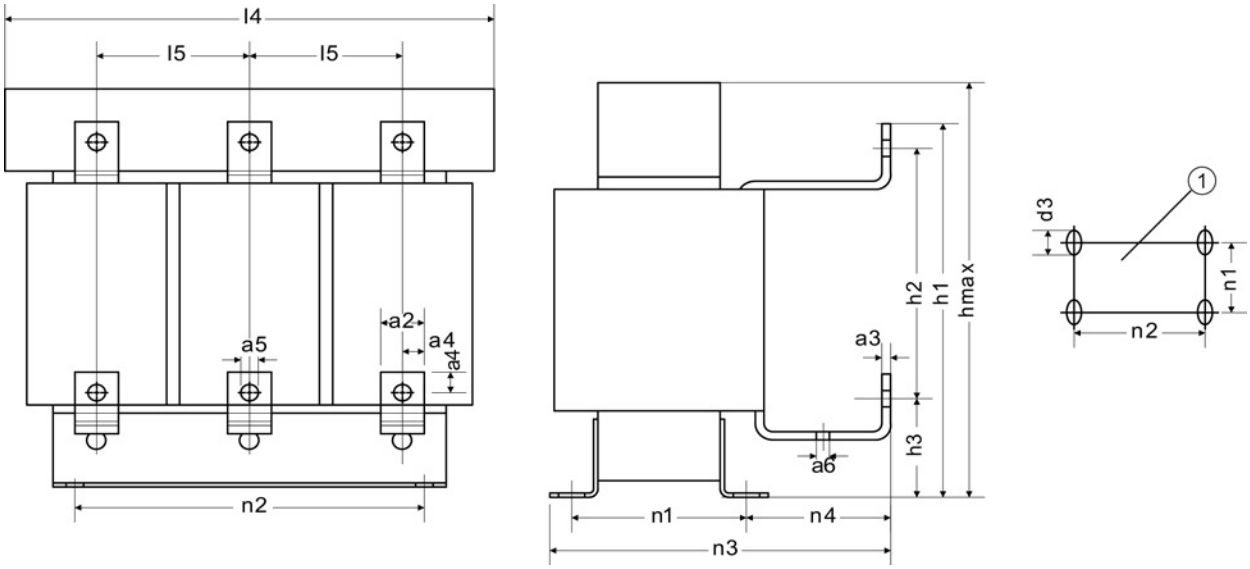

① Mounting hole

Figure 6-19 Dimension drawing, dV/dt reactor

Table 6- 23 Dimensions dV/dt reactor, 3-phase 380 VAC - 480 VAC in mm (inch)

6SL3000-	2DE32-6CA0	2DE35-0CA0
a2	25 (0.98)	30 (1.18)
a3	5 (0.19)	6 (0.23)
a4	14 (0.55)	17 (0.66)
a5	10.5 x 14 (0.41 x 0.55)	14 x 18 (0.55 x 0.70)
a6	7 (0.27)	9 (0.35)
l4	410 (16.14)	460 (18.11)
l5	135 (5.31)	152.5 (6.00)
hmax	370 (14.56)	370 (14.56)
h2	258 (10.15)	240 (9.44)
h3	76 (2.99)	83 (3.26)
n1 [1)]	141 (5.55)	182 (7.16)
n2 [1)]	316 (12.44)	356 (14.01)
n3	229 (9.01)	275 (10.82)
n4	72 (2.83)	71 (2.79)
d3	M10 [12 x 18] (0.47 x 0.70)	M12 [15 x 22] (0.59 x 0.86)
[1)] Lengths n1 and n2 correspond to the distance between holes.		

6.2.3.6 Dimension drawing of the voltage peak limiter

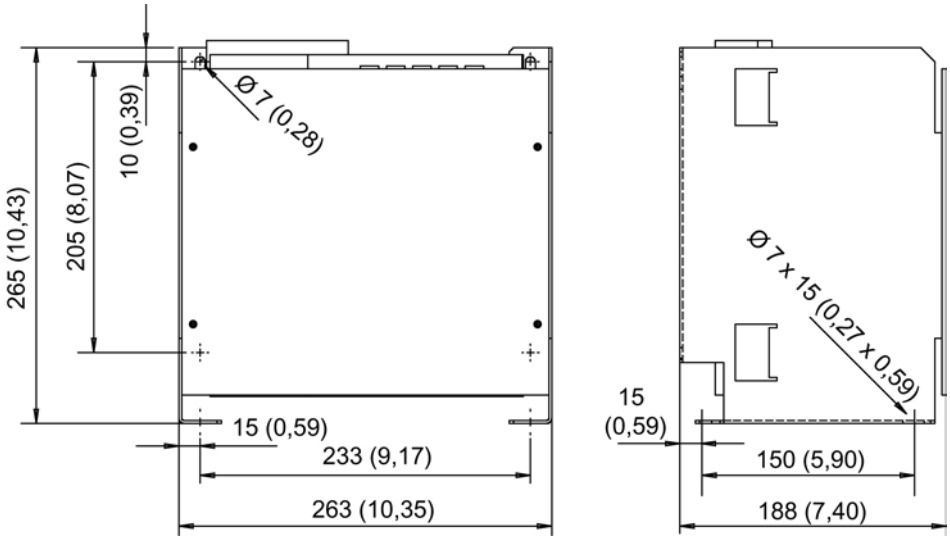

Figure 6-20 Dimension drawing of the Voltage Peak Limiter, type 1

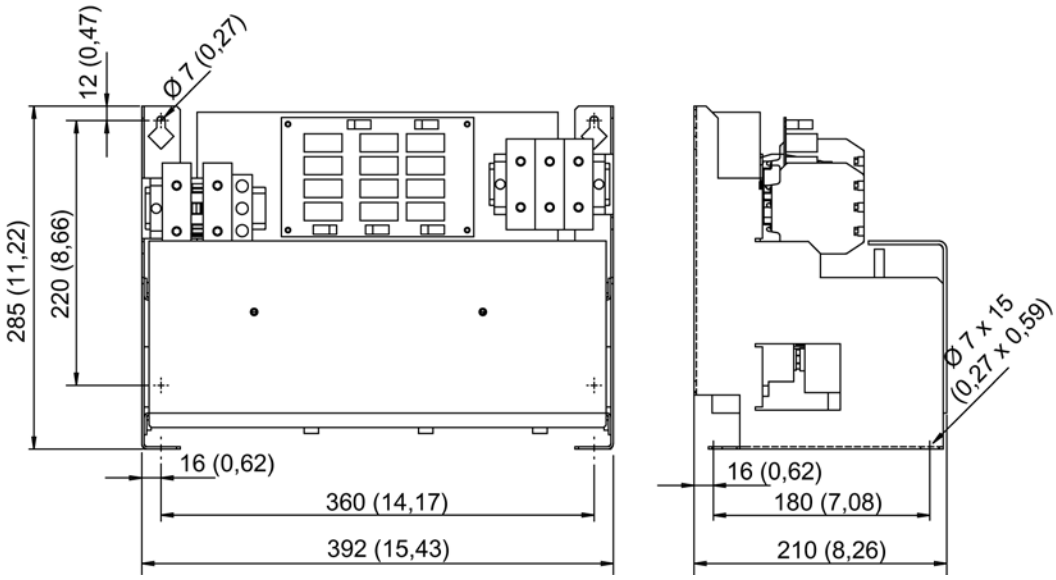

Figure 6-21 Dimension drawing of the Voltage Peak Limiter, type 2

Table 6- 24 Assigning Voltage Peak Limiter to dimension drawings

Voltage peak limiter	Dimension drawing type
6SL3000-2DE32-6BA0	Type 1
6SL3000-2DE35-0BA0	Type 2

6.2.3.7 Technical data

Table 6- 25 Technical data, dV/dt filter plus Voltage Peak Limiter

Order number	6SL3000-	2DE32-6AA0	2DE35-0AA0
Suitable for Power Module (unit rating)	6SL3310-	1TE32-1AAx (110 kW) 1TE32-6AAx (132 kW)	1TE33-1AAx (160 kW) 1TE33-8AAx (200 kW) 1TE35-0AAx (250 kW)
I_{thmax}	A	260	490
Degree of protection		IP00	IP00
dV/dt reactor			
Power loss - at 50 Hz - at 60 Hz - at 150 Hz	 kW kW kW	 0,701 0,729 0,78	 0,874 0,904 0,963
Connections - to the Power Module - load - PE		 M10 M10 M6	 M12 M12 M6
Max. permissible cable length between dV/dt reactor and motor	m	300 (shielded) 450 (unshielded)	
Dimensions Width Height Depth	 mm mm mm	 410 370 229	 460 370 275
Weight, approx.	kg	66	122
Voltage Peak Limiter			
Power loss - at 50 Hz - at 60 Hz - at 150 Hz	 kW kW kW	 0,029 0,027 0,025	 0,042 0,039 0,036
Connections - to the dV/dt reactor - DC - PE		 M8 M8 M8	 Terminal 70 mm² Terminal 70 mm² Terminal 35 mm²
Dimensions Width Height Depth	 mm mm mm	 265 263 190	 392 285 210
Weight, approx.	kg	6	16

6.2.4 dv/dt filter compact plus Voltage Peak Limiter

6.2.4.1 Description

The dV/dt filter compact plus Voltage Peak Limiter has two components: The dV/dt reactor and the voltage limiting network (Voltage Peak Limiter). The voltage limiting network cuts-off the voltage peaks and feeds the energy back into the DC link.

The dV/dt filter compact plus Voltage Peak Limiter is designed for use with motors for which the voltage strength of the insulation system is unknown or insufficient.

The dV/dt filters compact plus Voltage Peak Limiter limit the voltage load on the motor cables to values which correspond to limit value curve A according to IEC/TS 60034-25:2007.

The rate of voltage rise is limited to < 1,600 V/µs, the peak voltages are limited to < 1400 V.

6.2.4.2 Safety instructions for du/dt filter compact plus Voltage Peak Limiter

⚠ WARNING

Danger to life if the fundamental safety instructions and residual risks are not observed

The non-observance of the fundamental safety instructions and residual risks stated in Chapter 1 can result in accidents with severe injuries or death.

- Observe the fundamental safety instructions.
- Consider the residual risks for the risk evaluation.

⚠ DANGER

Danger to life due to electric shock in the event of missing touch protection

Death or serious injury can result when live parts are touched.

- For the dV/dt filters compact plus Voltage Peak Limiter, use touch protection according to IPXXA or corresponding to the local installation regulations.

WARNING

Danger to life caused by high discharge currents when the external protective conductor is interrupted

dV/dt filters plus Voltage Peak Limiter result in a high discharge current via the protective conductor. When the protective conductor is interrupted, touching live components can result in electric shock, which can lead to death or serious injuries.

- Ensure that the external protective conductor complies with at least one of the following conditions:
  - It is laid protected against mechanical damage.[1)]
  - For an individual core, it has a cross-section of at least 10 mm² Cu.
  - As core of a multi-core cable, it has a cross-section of at least 2.5 mm² Cu.
  - It has a parallel, second protective conductor with the same cross-section.
  - It corresponds to the local regulations for equipment with increased leakage current.

  [1)] Cables routed in control cabinets or enclosed machine enclosures are considered to be adequately protected against mechanical damage.

WARNING

Risk of fire and device damage as a result of ground fault / short-circuit

The connection to the DC link of the Power Module must be routed so that a ground fault or short-circuit can be ruled out. A ground fault can result in fire with associated smoke.

- Comply with local installation regulations, which allow this fault to be ruled out.
- Protect the cables from mechanical damage.
- In addition, apply one of the following measures:
  - Use cables with double insulation.
  - Observe adequate clearances, e.g. through the use of spacers.
  - Route the cables in separate cable ducts or pipes.

WARNING

Danger of fire through overheating for insufficient ventilation clearances

Insufficient ventilation clearances result in overheating with danger to persons as a result of smoke and fire. Further, increased failures can occur and the service life of units/systems shortened.

- It is essential that you maintain 100 mm ventilation clearances above and below the component.
- Always mount the dV/dt filters compact plus Voltage Peak Limiter in a vertical, upright position, to enable cooling air to flow through the heat sink on the Voltage Peak Limiter from the bottom to the top.

⚠ CAUTION

Risk of burns resulting from high surface temperature of the dV/dt filter compact

The surface temperatures of dV/dt filters compact may exceed 80° C. You can be severely burnt when touching the surface.

- Mount the dV/dt filters so that they cannot be touched. If this is not possible, at the dangerous locations, attach an appropriate warning note that is clearly visible and easy to understand.

NOTICE

Damage to the dV/dt filter compact by using components that have not been released

When using components that have not been released, damage or malfunctions can occur at the devices or the system itself.

- Only use a dV/dt filter compact that SIEMENS has released for SINAMICS.

NOTICE

Risk of damaging the dV/dt filter compact by exceeding the maximum output frequency

The maximum permissible output frequency when using dV/dt filters compact plus Voltage Peak Limiter is 150 Hz. The dV/dt filter compact can be damaged if the output frequency is exceeded.

- When commissioning you must always activate the dV/dt filter compact plus Voltage Peak Limiter connected to the Power Module during commissioning (see SINAMICS S120/S150 List Manual).

NOTICE

Damage to the dV/dt filter compact by exceeding the maximum pulse frequency

The maximum permissible pulse frequency on the Power Module is 4 kHz. The dV/dt filter compact can be damaged if the pulse frequency is exceeded.

- When using a dV/dt filter compact, operate a Power Module with a maximum pulse frequency of 4 kHz.

NOTICE

Damage to the dV/dt filter at an output frequency less than 10 Hz in continuous operation

Continuous operation at an output frequency less than 10 Hz can produce thermal overload and destroy the dV/dt filter.

- Do not load the dV/dt filter for more than five minutes at an output frequency less than 10 Hz.
- Then subsequently select operation at an output frequency > 10 Hz for a duration of five minutes.

NOTICE

Damage to the dV/dt filter if motor is not connected

If the drive is operated without the motor being connected, the dV/dt filter plus the Voltage Peak Limiter may be damaged or destroyed.

- Never operate drives with dV/dt filters plus Voltage Peak Limiter without a motor being connected.

NOTICE

Damage to the connections on the dV/dt filter compact due to direct mechanical connection of the motor cables

The direct mechanical connection of the motor cables to the dV/dt filter compact will deform the connections.

- Take measures on the installation to ensure that the connections cannot be deformed by the mechanical load exerted by the connected cables.

Note

When using a dV/dt filter compact plus Voltage Peak Limiter, the pulse frequency can be set in the range between the rated pulse frequency and the maximum pulse frequency.

Note

Current derating at an increased pulse frequency depends on the derating of the associated Power Module.

Note

Keep the motor cables between the Power Module and the dV/dt filter compact, as well as the cables to the DC link as short as possible (max. 5 m).

6.2.4.3 Interface description

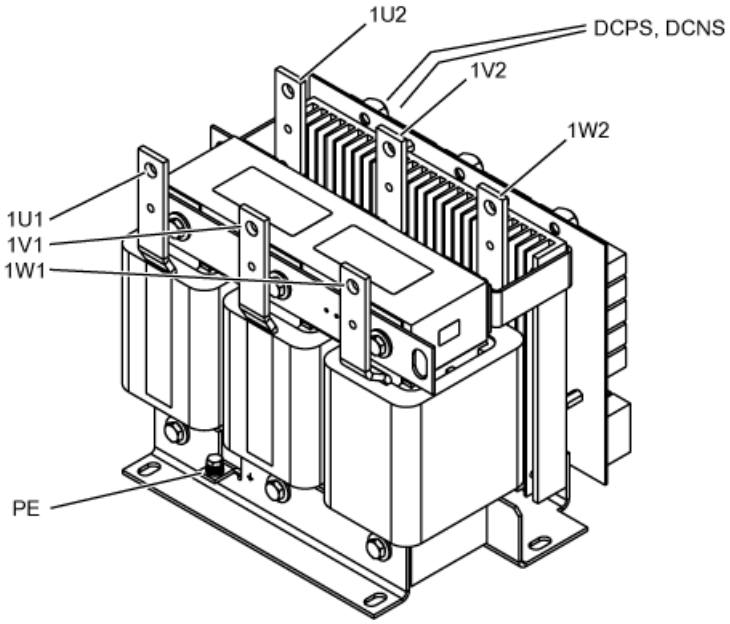

Figure 6-22 Interface overview, dV/dt filter compact plus Voltage Peak Limiter, type 1

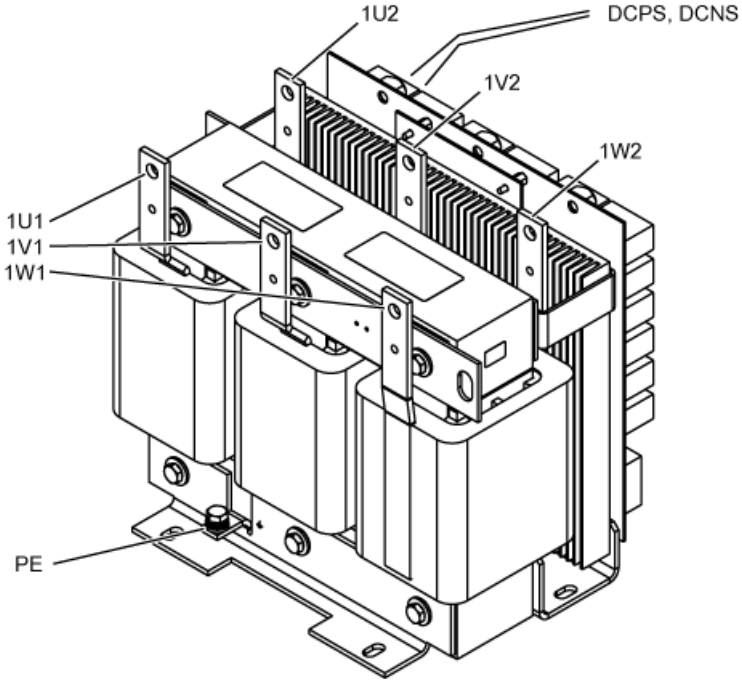

Figure 6-23 Interface overview, dV/dt filter compact plus Voltage Peak Limiter, type 2

6.2.4.4 Connecting the dv/dt filter compact plus Voltage Peak Limiter

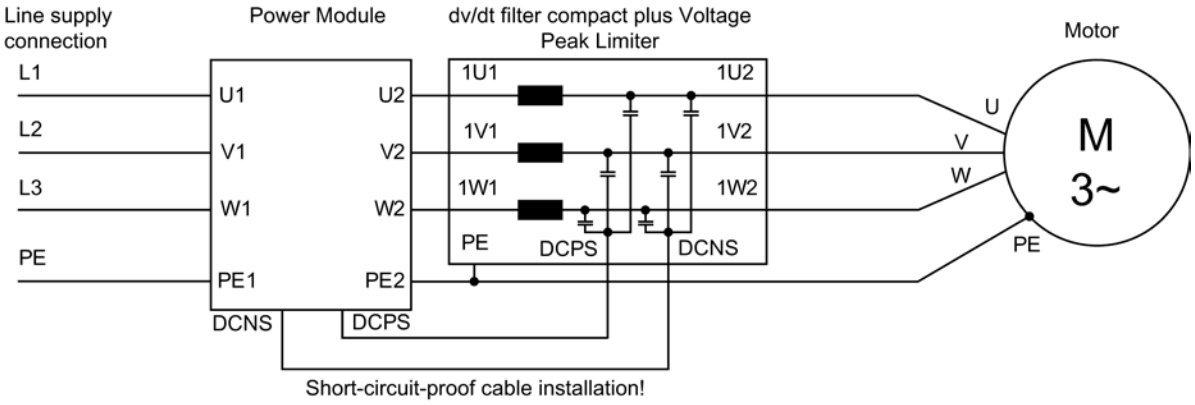

Figure 6-24 Connecting the dV/dt filter compact plus Voltage Peak Limiter

Cable cross-sections

Table 6- 26 Cable cross-sections for connections between a dV/dt filter and Power Module

dV/dt filter compact plus Voltage Peak Limiter	Cross-section [mm²]	Connection on dV/dt filter
6SL3000-2DE32-6EA0	16	M8 screw/12 Nm
6SL3000-2DE35-0EA0	25	M8 screw/12 Nm

6.2.4.5 Dimension drawing of dv/dt filter compact plus Voltage Peak Limiter

dV/dt filter compact plus Voltage Peak Limiter, type 1

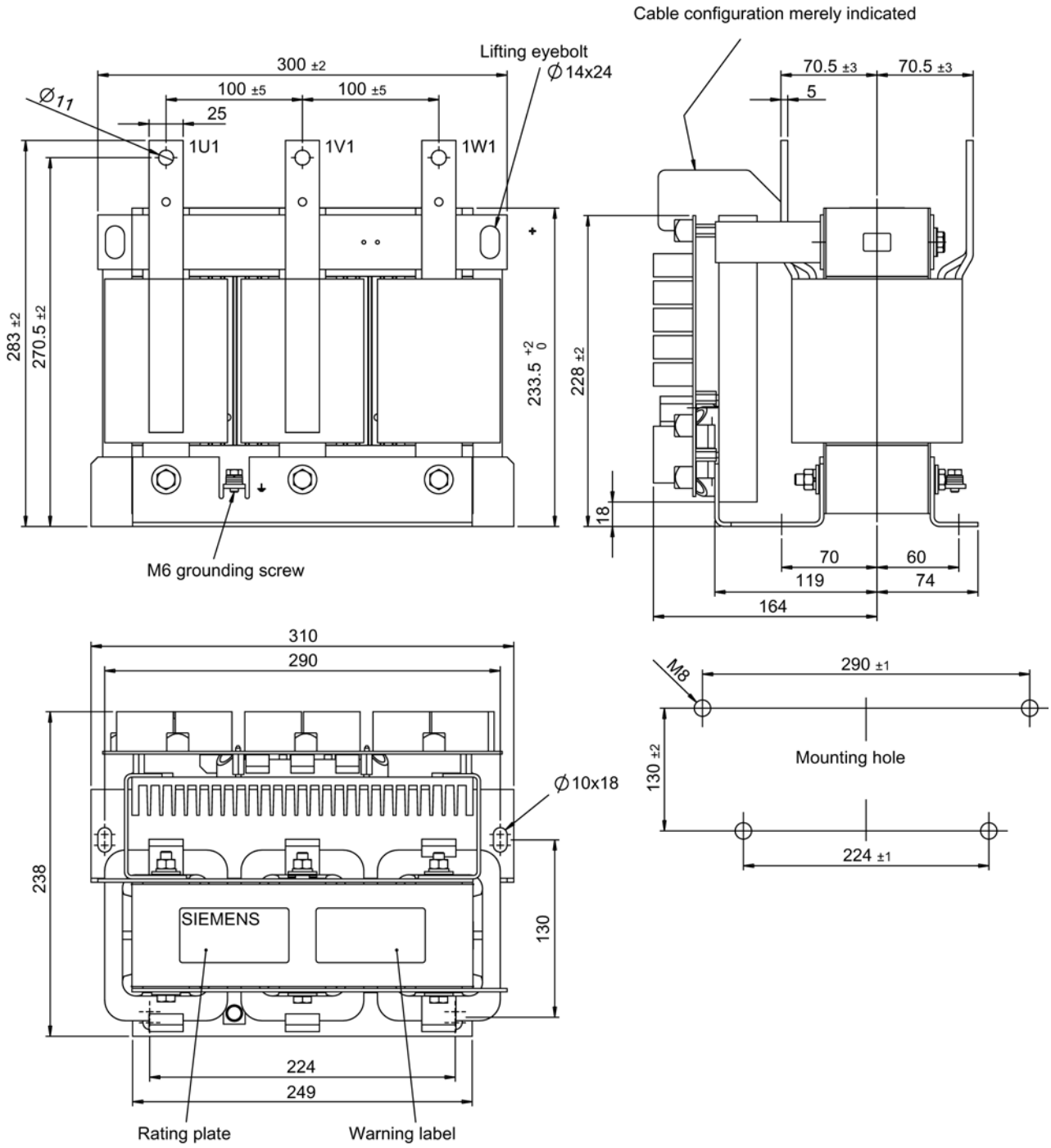

Figure 6-25 Dimension drawing of dV/dt filter compact plus Voltage Peak Limiter, type 1

dV/dt filter compact plus Voltage Peak Limiter, type 2

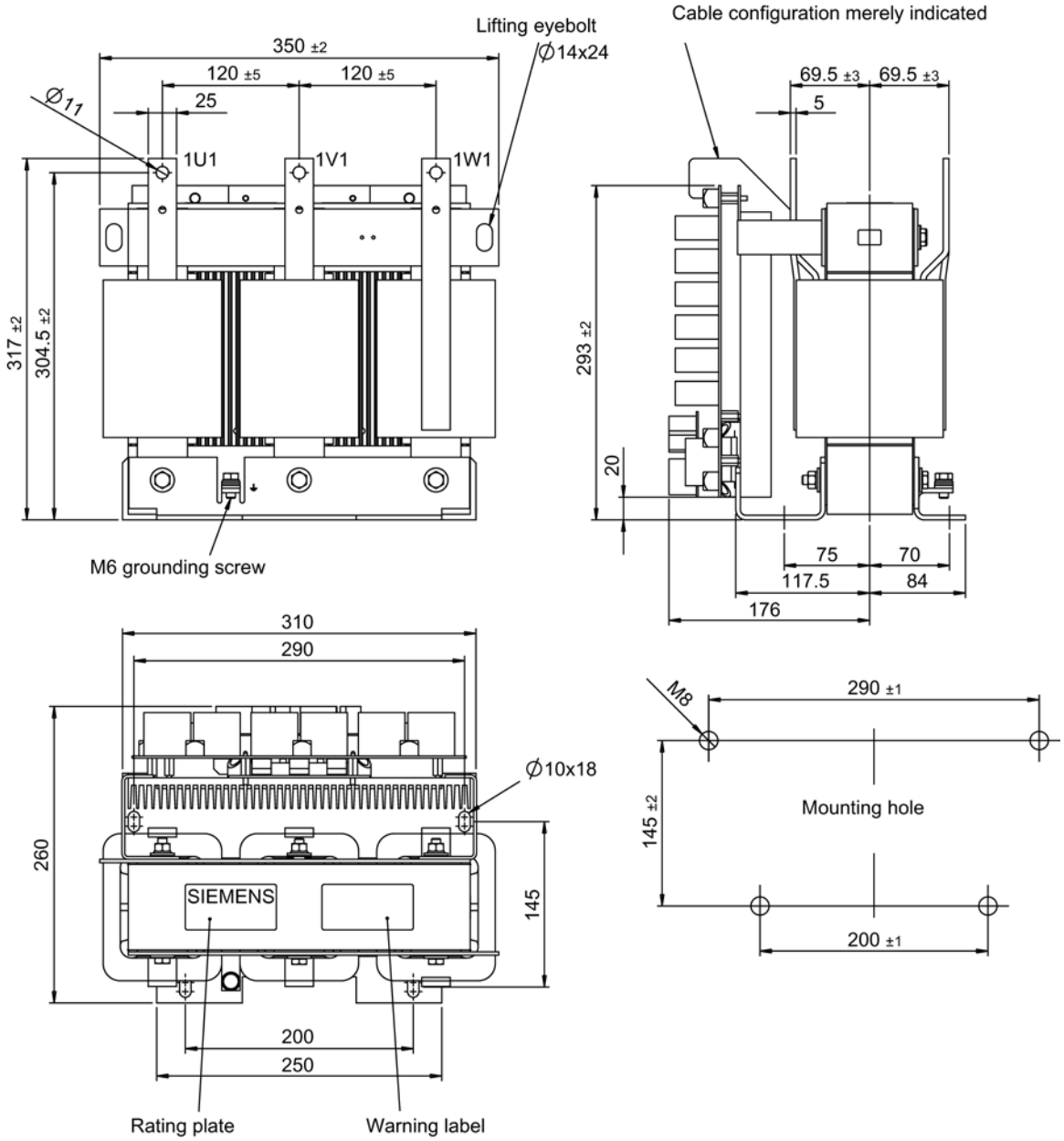

Figure 6-26 Dimension drawing of dV/dt filter compact plus Voltage Peak Limiter, type 2

Table 6- 27 Assignment of the dV/dt filter compact plus Voltage Peak Limiter to the dimension drawings

dV/dt filter compact plus Voltage Peak Limiter	Dimension drawing type
6SL3000-2DE32-6EA0	Type 1
6SL3000-2DE35-0EA0	Type 2

6.2.4.6 Technical data

Table 6- 28 Technical data, dV/dt filter compact plus Voltage Peak Limiter

Order number	6SL3000-	2DE32-6EA0	2DE35-0EA0
Suitable for Power Module (unit rating)	6SL3310-	1TE32-1AAx (110 kW) 1TE32-6AAx (132 kW)	1TE33-1AAx (160 kW) 1TE33-8AAx (200 kW) 1TE35-0AAx (250 kW)
I_{thmax}	A	260	490
Degree of protection		IP00	IP00
Power loss - at 50 Hz - at 60 Hz - at 150 Hz	 kW kW kW	 0,210 0,215 0,255	 0,290 0,296 0,344
Connections - 1U1/1V1/1W1 - DCPS/DCNS - 1U2/1V2/1W2 - PE		 For M10 stud For M8 screw For M10 stud M6 screw	 For M10 stud For M8 screw For M10 stud M6 screw
Max. permissible cable length between dV/dt filter and motor	m	100 (shielded) 150 (unshielded)	
Dimensions Width Height Depth	 mm mm mm	 310 283 238	 350 317 260
Weight, approx.	kg	41	61

Control Units, Control Unit Adapters and operating components

7

7.1 Introduction

7.1.1 Control Units

Brief description

The CU310-2 Controller Units are designed for operation connected to a Power Module, in the blocksize or chassis formats.

CU310-2 DP	CU310-2 PN

Features

Designation	Features	Order number
CU310-2 DP	- PROFIBUS as an external communications interface - LAN (Ethernet) - TTL/HTL/SSI – encoder evaluation - analog setpoint input	6SL3040-1LA00-0AA0
CU310-2 PN	- 2x PROFINET as an external communications interface - LAN (Ethernet) - TTL/HTL/SSI – encoder evaluation - analog setpoint input	6SL3040-1LA01-0AA0

Memory card

The memory card has the firmware and default parameters for the operation of the Control Unit.

The memory card for the Control Unit must be ordered separately. The order number is 6SL3054-0EE00-1BA0.

Order numbers for memory cards with safety license can be found in Catalog PM21.

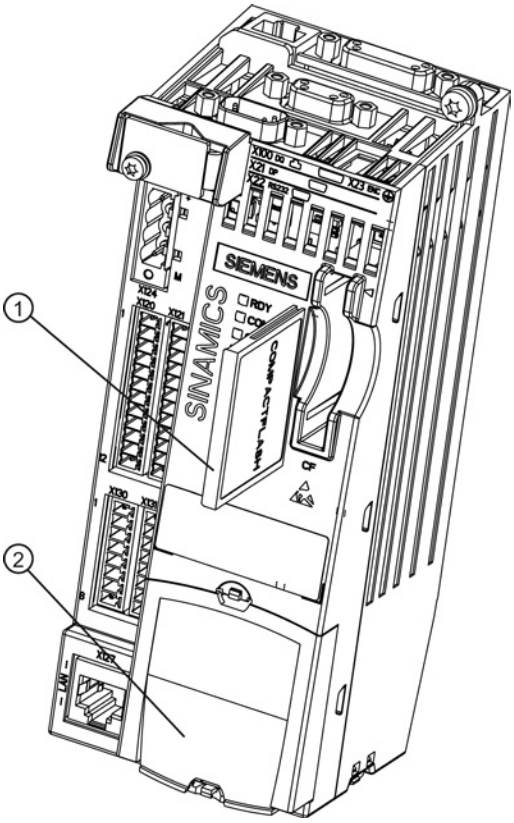

① Memory card
② Blanking plate

Figure 7-1 CU310-2 DP: CompactFlash Card slot

7.1.2 Control Unit Adapter

Brief description

Using a Control Unit Adapter, a Power Module can be connected as an additional axis to an existing DC/AC group. A higher-level closed-loop control module is always required.

Control Unit Adapter CUA31	Control Unit Adapter CUA32

Features

Designation	Features	Order number
CUA31	- Addition of an axis	6SL3040-0PA00-0AA1
CUA32	- Addition of an axis - TTL/HTL/SSI encoder evaluation	6SL3040-0PA01-0AA0

7.2 Safety instructions for Control Units and Control Unit Adapters

⚠ WARNING

Danger to life if the fundamental safety instructions and residual risks are not observed

The non-observance of the fundamental safety instructions and residual risks stated in Chapter 1 can result in accidents with severe injuries or death.

- Observe the fundamental safety instructions.
- Consider the residual risks for the risk evaluation.

⚠ WARNING

Danger of fire through overheating for insufficient ventilation clearances

Insufficient ventilation clearances result in overheating with danger to persons as a result of smoke and fire. Further, increased failures can occur and the service life of units/systems shortened.

- It is essential that you maintain 50 mm ventilation clearances above and below the Control Unit and Control Unit Adapter.
- Ensure that the air openings are not blocked by connecting cables.

⚠ WARNING

Danger to life due to software manipulation when using exchangeable storage media

Storing files onto exchangeable storage media amounts to an increased risk of infection, e.g. with viruses and malware. As a result of incorrect parameterization, machines can malfunction, which in turn can lead to injuries or death.

- Protect files stored on exchangeable storage media from malicious software by with suitable protection measures, e.g. virus scanners.

NOTICE

Memory card damage caused by electric fields or electrostatic discharge

Electrical fields or electrostatic discharge may result in the memory card being damaged.

- When removing and inserting the memory card, always observe the ESD regulations.

NOTICE

Risk of component destruction as a result of high leakage currents

The Control Unit or other PROFIBUS and/or PROFINET nodes can be destroyed, if significant leakage currents flow via the PROFIBUS or PROFINET cable.

- Use a functional equipotential bonding conductor with a cross-section of at least 25 mm² between components of a plant or system that are located at a distance from each other.

NOTICE

Device failure due to unshielded or incorrectly laid cables to the temperature sensors

Unshielded or incorrectly laid cables to the temperature sensors can cause induced voltages from the power side to the signal-processing electronics. This can cause massive interferences of all signals (error messages) through to the failure of individual components (damage of the devices).

- Use only shielded cables to the temperature sensors.
- If cables to temperature sensors are laid together with the motor cable, use twisted pairs and separately shielded cables.
- Connect the cable shield to ground potential through a large surface area.
- Recommendation: Use appropriate Motion Connect cables.

NOTICE

Damage caused by the use of incorrect DRIVE-CLiQ cables

Damage or malfunctions can occur on the devices or system when DRIVE-CLiQ cables are used that are either incorrect or have not been approved for this purpose.

- Only use suitable DRIVE-CLiQ cables that have been approved by Siemens for the particular application.

Note

Functional faults caused by dirty DRIVE-CLiQ interfaces

Malfunctions can occur in the system through the use of polluted DRIVE-CLiQ interfaces.

- Close any unused DRIVE-CLiQ interfaces with the supplied cover plates.

Note

Function equipotential bonding for distributed DRIVE-CLiQ nodes

Integrate all of the components that are connected via DRIVE-CLiQ into the function equipotential bonding concept. The connection should be preferably established by mounting on metallic bare machine and plant components that are connected with one another using an equipotential bonding conductor.
Alternatively, you can establish equipotential bonding using a conductor (min. 6 mm²), which as far as possible, is routed in parallel to the DRIVE-CLiQ cable. This involves all distributed DRIVE-CLiQ nodes, for example SMCx0.

7.3 Control Unit CU310-2 PN (PROFINET)

7.3.1 Description

The Control Unit CU310-2 PN (PROFINET) is a control module for single drives in which the open-loop and closed-loop control functions of the drive are implemented.
It controls the Power Modules in the blocksize format via the PM-IF interface and is mounted directly on the Power Module. Power Modules Chassis are controlled from the Control Unit via the DRIVE-CLiQ interface. They are mounted next to the Power Modules in the control cabinet.

The CU310-2 PN is hot-pluggable. It can be used with firmware version 4.4 or higher.

The table shows an overview of the interfaces on the CU310-2 PN.

Table 7- 1 Overview of the CU310-2 PN interfaces

Type	Quantity
Isolated digital inputs	11
Non-isolated digital inputs/outputs	8
Isolated digital output	1
Non-isolated analog input	1
DRIVE-CLiQ interface	1
PROFINET interfaces	2
Serial interface (RS232)	1
Encoder interface (HTL/TTL/SSI)	1
LAN (Ethernet)	1
Temperature sensor input	1
EP terminal	1
Measuring sockets	3

7.3.2 Interface description

7.3.2.1 Overview

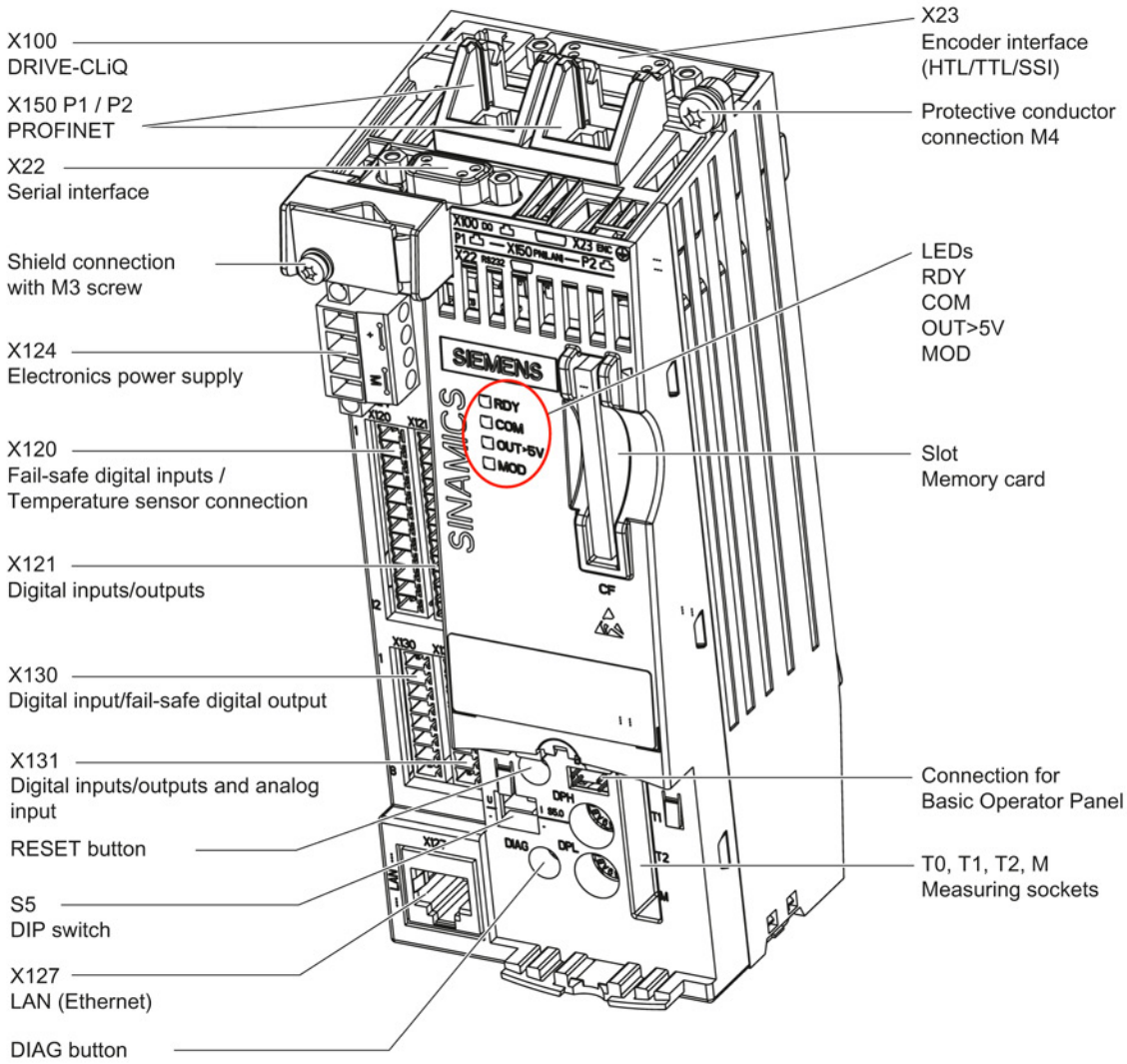

Figure 7-2 CU310-2 PN overview of interfaces

Note

The PROFIBUS address switch on the CU310-2 PN has no function.

The interface to the Power Module is located at the rear of the CU310-2 PN.

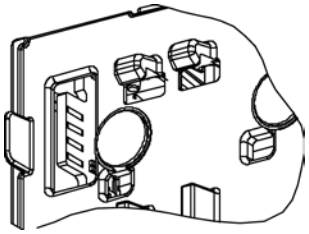

Figure 7-3 CU310-2 PN interface to the Power Module (PM-IF)

7.3.2.2 X22 serial interface (RS232)

Table 7- 2 X22 serial interface (RS232)

	Pin	Signal name	Technical data
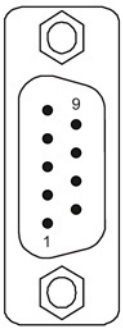	1	Reserved, do not use	
	2	XRXD_RS232	Receive data
	3	XTXD_RS232	Transmit data
	4	Reserved, do not use	
	5	GND	Ground
	6	Reserved, do not use	
	7	Reserved, do not use	
	8	Reserved, do not use	
	9	Reserved, do not use	
Connector type	9-pin SUB D connector		

Features

The maximum data rate is:

- 120 kBaud at a load capacity of 1.0 nF
- 20 kBaud at a load capacity of 2.5 nF

7.3.2.3 X23 HTL/TTL/SSI encoder interface

Table 7- 3 X23 HTL/TTL/SSI encoder interface

	Pin	Signal name	Technical data
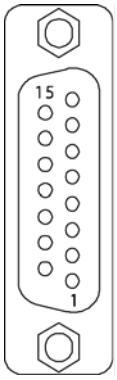	1	+Temp	KTY or PTC input
	2	SSI_CLK	SSI clock, positive
	3	SSI_XCLK	SSI clock, negative
	4	P encoder 5 V / 24 V	Encoder power supply
	5	P encoder 5 V / 24 V	
	6	P_Sense	Sense input, encoder power supply
	7	GND	Ground, encoder power supply
	8	M (-Temp)	Ground for KTY or PTC
	9	M_Sense	Ground sense input
	10	RP	R track positive
	11	RN	R track negative
	12	BN	B track negative
	13	BP	B track positive
	14	AN_SSI_XDAT	A track negative / SSI data negative
	15	AP_SSI_DAT	A track positive / SSI data positive
Connector type	15-pin Sub-D socket		
Measuring current via temperature sensor connection: 2 mA			

NOTICE

Risk of motor overheating for incorrectly connected KTY temperature sensor

A KTY temperature sensor connected with incorrect polarity cannot detect if the motor overheats.

- Make sure that you connect the KTY temperature sensor with the correct polarity.

Note

There are two ways of connecting the temperature sensor:

1. via X120, terminals 1 and 2
2. via X23, pins 1 and 8

Encoders that can be connected

Note

Use of bipolar and unipolar encoders

Use bipolar encoders.

When using unipolar encoders, the unused negative track signals can either be connected or connected to ground. This results in different switching thresholds.

Table 7- 4 Specification of measuring systems that can be connected

Parameter	Designation	Threshold	Min.	Type	Max.	Unit
Permissible signal level in bipolar mode[1]; (TTL, SSI, HTL bipolar at X23)[2][3]	U_{diff}		2,0		Vcc	V
Permissible signal frequency	f_S		-		500	kHz
Required edge clearance	t_{min}		100		-	ns
Permissible zero pulse (with $T_s = 1/f_s$)	Length		¼ · T_s		¾ · T_s	
	Center of the pulse position		50	135	220	degrees
Switching threshold in the unipolar mode[1] and signals AN_SSI_XDAT, BN, RN at X23 connected to M_Encoder	$U_{(Switch)}$	High [4]	8,4	10,6	13,1	V
		Low[4]	3,5	4,8	6,3	V
Switching thresholds in the unipolar mode (see SINAMICS S120/S150 List Manual) and signals AN_SSI_XDAT, BN, RN not connected to X23	$U_{(Switch)}$	High [4]	9	11,3	13,8	V
		Low[4]	5,9	7,9	10,2	V

1) See SINAMICS S120/S150 List Manual for setting the mode

2) Other signal levels according to the RS422 specification.

3) The absolute level of the individual signals varies between 0 V and Vcc of the measuring system.

4) See SINAMICS S120/S150 List Manual for setting the threshold

Encoder cables

Encoder type	Maximum encoder cable length in m
TTL[1)]	100
HTL unipolar[2)]	100
HTL bipolar	300
SSI [3)]	up to 100 (depending on the baud rate)

1) 100 m with remote sense

2) Because the transmission technology is more robust, the bipolar connection should always be used. The unipolar connection should only be used if the encoder type does not output push-pull signals.

3) For the cable length, see the diagram "Maximum cable lengths depending on the SSI baud rate for SSI encoders"

Note

Prefabricated cable for 5 V TTL encoder

When using a 5 V TTL encoder (6FX encoder), use connection cable 6FX8002-2CR00-xxx.

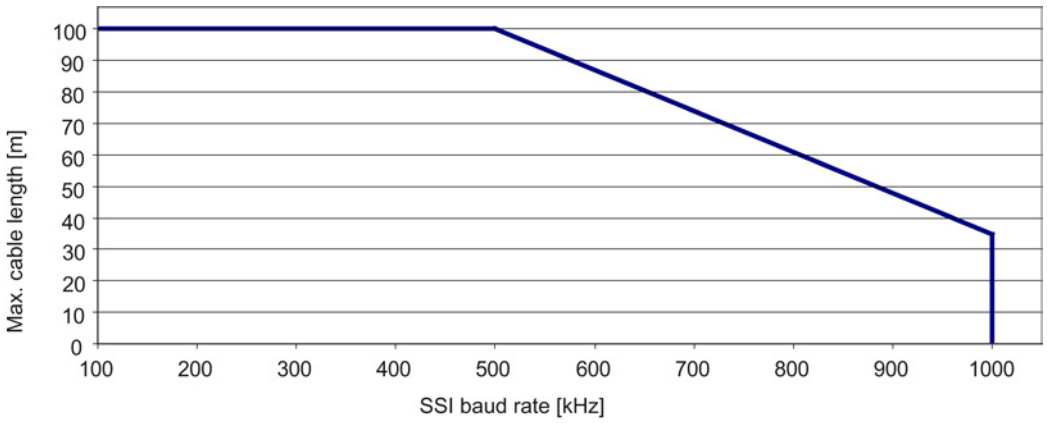

Figure 7-4 Maximum cable lengths depending on the SSI baud rate for SSI encoders

7.3.2.4 X100 DRIVE-CLiQ interface

Table 7- 5 X100 DRIVE-CLiQ interface

	Pin	Signal name	Technical data
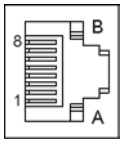	1	TXP	Transmit data +
	2	TXN	Transmit data -
	3	RXP	Receive data +
	4	Reserved, do not use	-
	5	Reserved, do not use	-
	6	RXN	Receive data -
	7	Reserved, do not use	-
	8	Reserved, do not use	-
	A	+ (24 V)	Power supply
	B	M (0 V)	Electronic ground
Connector type	DRIVE-CLiQ socket		

The blanking cover for the DRIVE-CLiQ port is included in the scope of delivery.

Blanking covers (50 pieces) Order number: 6SL3066-4CA00-0AA0

7.3.2.5 X120 digital inputs (fail-safe)/EP terminal/temperature sensor

Table 7- 6 X120 fail-safe digital inputs/temperature sensor input

	Terminal	Designation [1]		Technical data
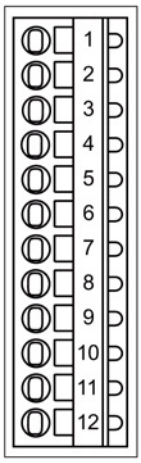	1	+ Temp [2]		Temperature sensors: KTY84-1C130/PTC Measuring current via temperature sensor connection: 2 mA
	2	- Temp [2]		
	3	DI 16	F-DI 0	Voltage: - 3 … 30 V Current consumption, typical: 6 mA at 24 VDC Input delay (typ.): [2] For "0" → "1": 50 µs For "1" → "0": 150 µs Level (incl. ripple): High signal level: 15 … 30 V Low signal level: -3 … 5 V Electrical isolation: M1: Reference potential for DO16, DI16, DI18 and DI20 DI17-/DI19-/DI21-: Reference potential for DI17/DI19/DI21
	4	DI17+ / EP +24 V3 (Enable Pulses)		
	5	DI17- / EP M3 (Enable Pulses)		
	6	DI 18	F-DI 1	
	7	DI 19+		
	8	DI 19-		
	9	DI 20	F-DI 2	
	10	DI 21+		
	11	DI 21-		
	12	M1		
Type: Spring-loaded terminal 1 (Page 437) Max. cross-section that can be connected: 1.5 mm²				

[1] DI: Digital input; DO: Digital output; F-DI: Fail-safe digital input

[2] Control of Chassis Power Modules: +Temp/-Temp deactivated, temperature input via terminal X41 of the Power Modules

[3] Pure hardware delay

The maximum cable length that can be connected is 30 m.

Fail-safe digital inputs

An F-DI consists of a digital input and a second digital input to which the cathode of the optocoupler is connected.

Temperature sensor input

NOTICE
Risk of motor overheating for incorrectly connected KTY temperature sensor A KTY temperature sensor connected with incorrect polarity cannot detect if the motor overheats. • Make sure that you connect the KTY temperature sensor with the correct polarity.

Further information regarding the temperature sensor may be found in the SINAMICS S120 Commissioning Manual, "Temperature sensors for SINAMICS components" section.

The maximum length of the temperature sensor cable is 300 m. The cables must be shielded. For cable lengths >100 m, cables with a cross-section of ≥1 mm² must be used.

EP terminal

The pulse inhibit function (EP) is only available when Integrated Basic Functions are enabled.

7.3.2.6 X121 digital inputs/outputs

Table 7- 7 X121 digital inputs and bidirectional digital inputs/outputs

	Terminal	Designation [1]	Technical data
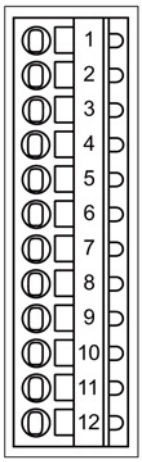	1	DI 0	Voltage: -3 … 30 VDC Current consumption, typical: 6 mA at 24 V Electrical isolation: via optocoupler Level (incl. ripple) High level: 15 … 30 V Low signal level: -3 … 5 V (at ≤ 2 mA) Input delay (typ.): For "0" → "1": 50 µs For "1" → "0": 150 µs protected against polarity reversal
	2	DI 1	
	3	DI 2	
	4	DI 3	
	5	M2	Reference potential for digital inputs DI 0 to DI 3
	6	GND	Ground reference for the electronics
	7	DI/DO 8	**As input:** Voltage: -3 … 30 VDC Current consumption, typical: 5 mA at 24 V Level (incl. ripple) High level: 15 … 30 V Low signal level: -3 … 5 V (at ≤ 2 mA) DI/DO 8, 9, 10, and 11 are rapid inputs [2] Input delay (typ.): For "0" → "1": 5 µs For "1" → "0": 50 µs **As output:** Voltage: 24 VDC Max. load current per output: 500 mA Output delay (typ. / max.)[3]: For "0" → "1": 150 µs / 400 µs For "1" → "0": 75 µs / 100 µs Short-circuit, ground fault, overload proof Automatic switch on again after overload trip Switching frequency: for ohmic load: Max. 100 Hz For inductive load: Max. 0.5 Hz For lamp load: Max. 10 Hz Maximum lamp load: 5 W
	8	DI/DO 9	
	9	GND	
	10	DI/DO 10	
	11	DI/DO 11	
	12	GND	
Type: Spring-loaded terminal 1 (Page 437) Max. cross-section that can be connected: 1.5 mm^2			

[1] DI: Digital input; DI/DO: Bidirectional digital input/output

[2] The rapid inputs can be used as probe inputs or as inputs for the external zero mark

[3] Data for: V_{cc} = 24 V; load 48 Ω; high ("1") = 90% V_{out}; low ("0") = 10% V_{out}

The maximum cable length that can be connected is 30 m.

Note

An open input is interpreted as "low".

Terminal M2 must be connected so that the digital inputs (DI0 ... DI3) can be used. This is achieved through one of the following measures:

- Provide the ground reference of the digital inputs.
- A jumper to terminal M (this removes the electrical isolation for these digital inputs).

Note

A 24 V supply voltage must be connected to terminal X124 for the digital outputs to be used.

If momentary interruptions in the voltage occur in the 24 V supply, the digital outputs are deactivated until the interruption has been rectified.

7.3.2.7 X124 Electronics power supply

Table 7- 8 X124 Electronics power supply

	Terminal	Designation	Technical data
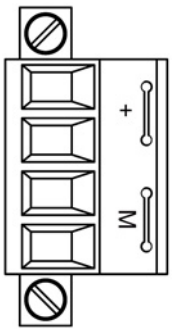	+	Electronics power supply	Voltage: 24 VDC (20.4 ... 28.8 VDC) Current consumption: Max. 1.0 A (without DRIVE-CLiQ or digital outputs) Max. current via jumper in connector: 20 A (15 A according to UL/CSA)
	+	Electronics power supply	
	GND	Electronics ground	
	GND	Electronics ground	
Type: Screw-type terminal 2 (Page 437) Max. cross-section that can be connected: 2.5 mm^2			

The screw terminal must be tightly screwed using a flat-bladed screwdriver.

The maximum cable length that can be connected is 10 m.

If the 24 V supply is not connected, the digital outputs of the following interfaces cannot be used:

- X121 (DO8 to DO11)
- X131 (DO12 to DO 15)

Note

The two "+" and/or "M" terminals are jumpered in the connector. This ensures that the supply voltage is looped through.

The current consumption increases by the value for the DRIVE-CLiQ participant and digital outputs.

7.3.2.8 X127 LAN (Ethernet)

Table 7- 9 X127 LAN (Ethernet)

	Pin	Signal name	Technical data
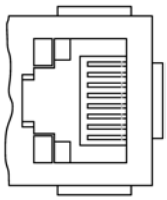	1	TXP	Ethernet transmit data +
	2	TXN	Ethernet transmit data -
	3	RXP	Ethernet receive data +
	4	Reserved, do not use	-
	5	Reserved, do not use	-
	6	RXN	Ethernet receive data -
	7	Reserved, do not use	-
	8	Reserved, do not use	-
Connector type	RJ45 socket		

Note

The Ethernet interface supports Auto MDI(X). It is therefore possible to use both crossed and uncrossed cables to connect the devices.

7.3.2.9 X130 digital input (fail safe) digital output

Table 7- 10 X130 digital input / fail-safe digital output

	Terminal	Designation [1]		Technical data
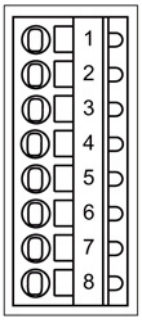	1	DI 22+		Voltage: -3 … 30 VDC Current consumption, typical: 6 mA at 24 V Electrical isolation: via optocoupler Level (incl. ripple) High level: 15 … 30 V Low signal level: -3 … 5 V (at ≤ 2 mA) Input delay (typ.): For "0" → "1": 50 µs For "1" → "0": 150 µs protected against polarity reversal
	2	DI 22-		
	3	M2		Reference potential for digital inputs DI 0 to DI 3
	4	GND		Ground reference for the electronics
	5	M1		Reference potential for DI 16, DI 18, DI 20 and DO 16
	6	24 V1		Power supply for DO 16
	7	DO 16+	F-DO 0 [2]	Voltage: 24 VDC Max. load current per output: 500 mA Output delay (typ./max.): For "0" → "1": 150 µs / 400 µs For "1" → "0": 75 µs / 100 µs Short-circuit, ground fault, overload proof Automatic switch on again after overload trip
	8	DO 16-		
Type: Spring-loaded terminal 1 (Page 437) Max. cross-section that can be connected: 1.5 mm²				

[1] DI: Digital input/DO: Digital output

[2] F-DO: Fail-safe digital output

The maximum cable length that can be connected is 30 m.

Fail-safe digital output

The F-DO consists of a high-side switch and a low-side switch.

For applications without the safety function, the high-side switch may be used as an additional digital output. The low side switch is not available.

Note

If the 24 V supply is briefly interrupted, the digital output is deactivated until the interruption has been rectified.

7.3.2.10 X131 digital inputs/outputs and analog input

Table 7- 11 X131 bidirectional digital inputs/outputs and analog input

	Terminal	Designation [1]	Technical data
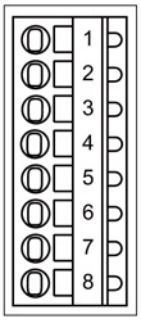	1	DI/DO 12	**As input:** Voltage: -3 … 30 VDC Current consumption, typical: 5 mA at 24 V Level (incl. ripple) High level: 15 … 30 V Low signal level: -3 … 5 V (at ≤ 2 mA) DI/DO 12, 13, 14, and 15 are rapid inputs [2] Input delay (typ.): For "0" → "1": 5 µs For "1" → "0": 50 µs **As output:** Voltage: 24 VDC Max. load current per output: 500 mA Output delay (typ. / max.)[3]: For "0" → "1": 150 µs / 400 µs For "1" → "0": 75 µs / 100 µs Short-circuit, ground fault, overload proof Automatic switch on again after overload trip Switching frequency: For ohmic load: Max. 100 Hz For inductive load: Max. 0.5 Hz For lamp load: Max. 10 Hz Maximum lamp load: 5 W
	2	DI/DO 13	
	3	GND	
	4	DI/DO 14	
	5	DI/DO 15	
	6	GND	Electronics ground
	7	AI 0+	The analog input can be switched between a current or voltage input using DIP switch S5. **Common-mode range**: ±12 V **As voltage input**: -10 … 10 V; R_i > 100 kΩ Resolution: 12-bit + sign (with respect to the maximum range that can be resolved -11 V ... 11 V) **As current input**: -20 ... 20 mA; Ri = 250 Ω Resolution: 11-bit + sign (related to -22 … 22 mA) Max. range that can be resolved: -44 … 44 mA
	8	AI 0-	
Type: Spring-loaded terminal 1 (Page 437) Max. cross-section that can be connected: 1.5 mm^2			

[1] DI/DO: bidirectional digital input/output; AI: Analog input

[2] The rapid inputs can be used as probe inputs or as inputs for the external zero mark.

[3] Data for: V_{cc} = 24 V; load 48 Ω; high ("1") = 90% V_{out}; low ("0") = 10% V_{out}

The maximum cable length that can be connected is 30 m.

Note

Permissible voltage values at the analog input

The common-mode range must not be violated in order to avoid incorrect results of the analog-digital conversion. This means that the analog differential voltage signals can have a maximum offset voltage of +/- 15 V with respect to the reference potential.

Note

A 24 V supply must be connected to terminal X124 for the digital outputs to be used.

If momentary interruptions in the voltage occur in the 24 V supply, the digital outputs are deactivated until the interruption has been rectified.

7.3.2.11 X150 P1/P2 PROFINET

Table 7- 12 X150 P1 and X150 P2 PROFINET

	Pin	Signal name	Technical data
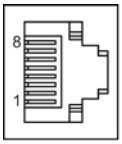	1	RXP	Receive data +
	2	RXN	Receive data -
	3	TXP	Transmit data +
	4	Reserved, do not use	-
	5	Reserved, do not use	-
	6	TXN	Transmit data -
	7	Reserved, do not use	-
	8	Reserved, do not use	-
Connector type:	RJ45 socket		
Data rate:	100 Mbits or 10 Mbits		

Note

The PROFINET interfaces support Auto MDI(X). It is therefore possible to use both crossed and uncrossed cables to connect the devices.

For diagnostic purposes, the two PROFINET interfaces are each equipped with a green and a yellow LED. The table shows the status information these indicate.

Table 7- 13 LED states on the X150 P1/P2 PROFINET interface

LED	Color	Status	Description
Link port	-	OFF	Missing or faulty link
	Green	Continuous light	10 or 100 Mbit link available
Activity port	-	OFF	No activity
	Yellow	Flashing	Data is being received or sent at port x

7.3.2.12 Measuring sockets

Table 7- 14 Measuring sockets T0, T1, T2

	Socket	Function	Technical data
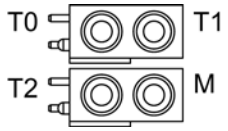	T0	Measuring socket 0	Voltage: 0 … V Resolution: 8 bits Load current: max. 3 mA Continued-short-circuit-proof The reference potential is terminal M
	T1	Measuring socket 1	
	T2	Measuring socket 2	
	GND	Ground	
The measuring sockets are only suitable for multiple-spring wire plugs with a diameter of 2 mm.			

Note

Measuring sockets support commissioning and diagnosis. It must not be connected for normal operation.

7.3.2.13 S5 DIP switch

DIP switch S5 is used to switch the analog input between voltage input or current input. It is located under the blanking cover (see CU310-2 PN Interface Overview (Page 263).)

Table 7- 15 DIP switch S5 - switchover between voltage/current

	Switch	Function
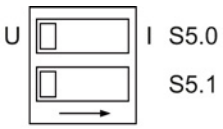	S5.0	Switchover between voltage (U) / current (I)
	S5.1	Not assigned

7.3.2.14 DIAG button

The DIAG pushbutton is reserved for service functions.

7.3.2.15 RESET button

Pressing the RESET button restarts the CU310-2 PN after expiry of a preset time. A data backup is run at the same time. This means that all the settings are retained.

7.3.2.16 Memory card

Inserting the memory card

Use only memory cards manufactured by Siemens to run the CU310-2 PN.

Insert the memory card into the CU310-2 PN so that the arrow on the card's label (on the left, next to the word Siemens) points to the arrow on the device.

Figure 7-5 CU310-2 PN Inserting the memory card

The memory card in a faulty CU310-2 PN

If you are returning a faulty CU310-2 PN to Siemens, remove the memory card and keep it in a safe place.
This ensures that all your saved data (firmware, licenses, parameters) will be available to you immediately again to commission a replacement unit.

7.3.3 Connection examples

CU310-2 PN without safety function

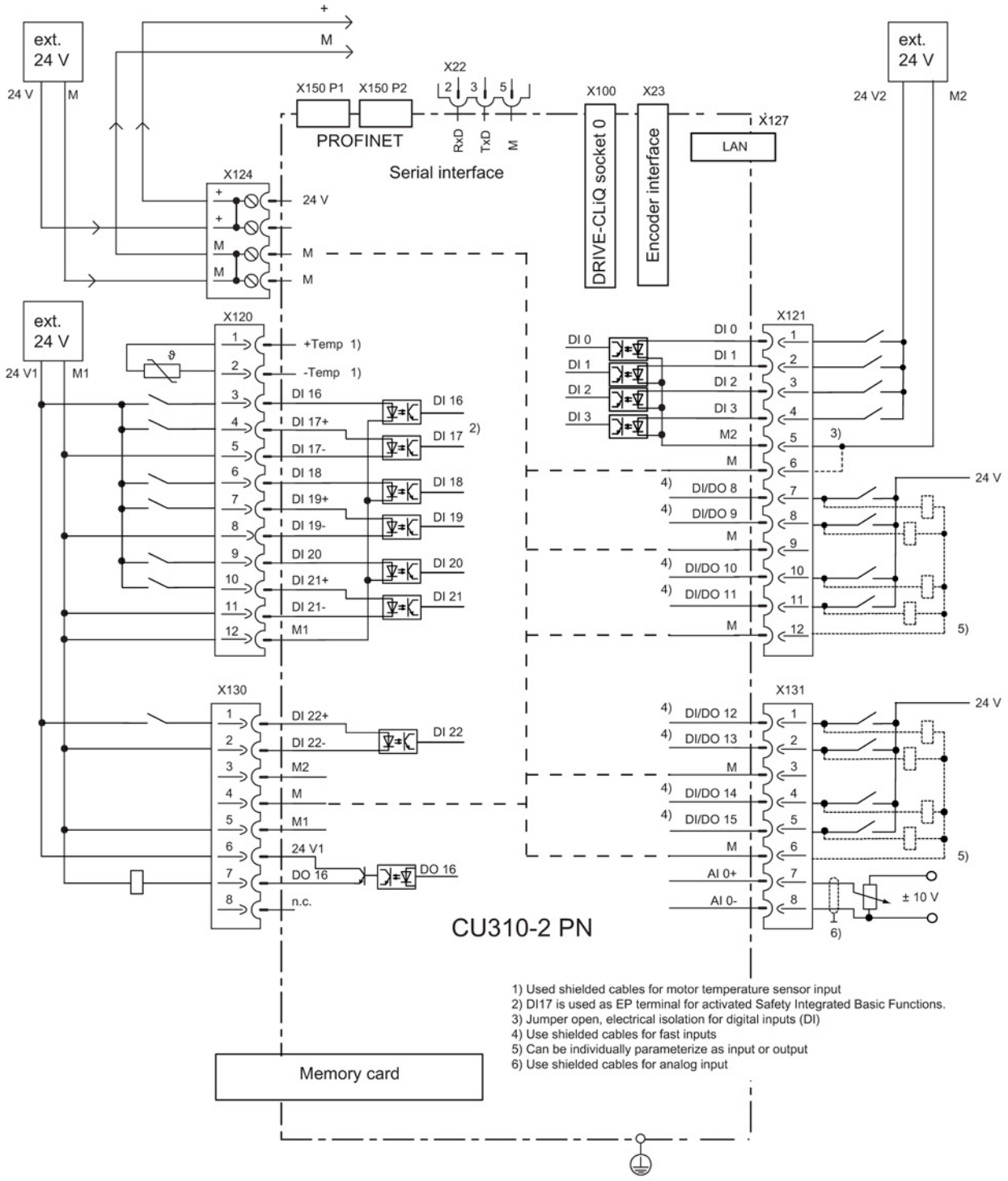

Figure 7-6 Connection example, CU310-2 PN without safety function

CU310-2 PN with safety function

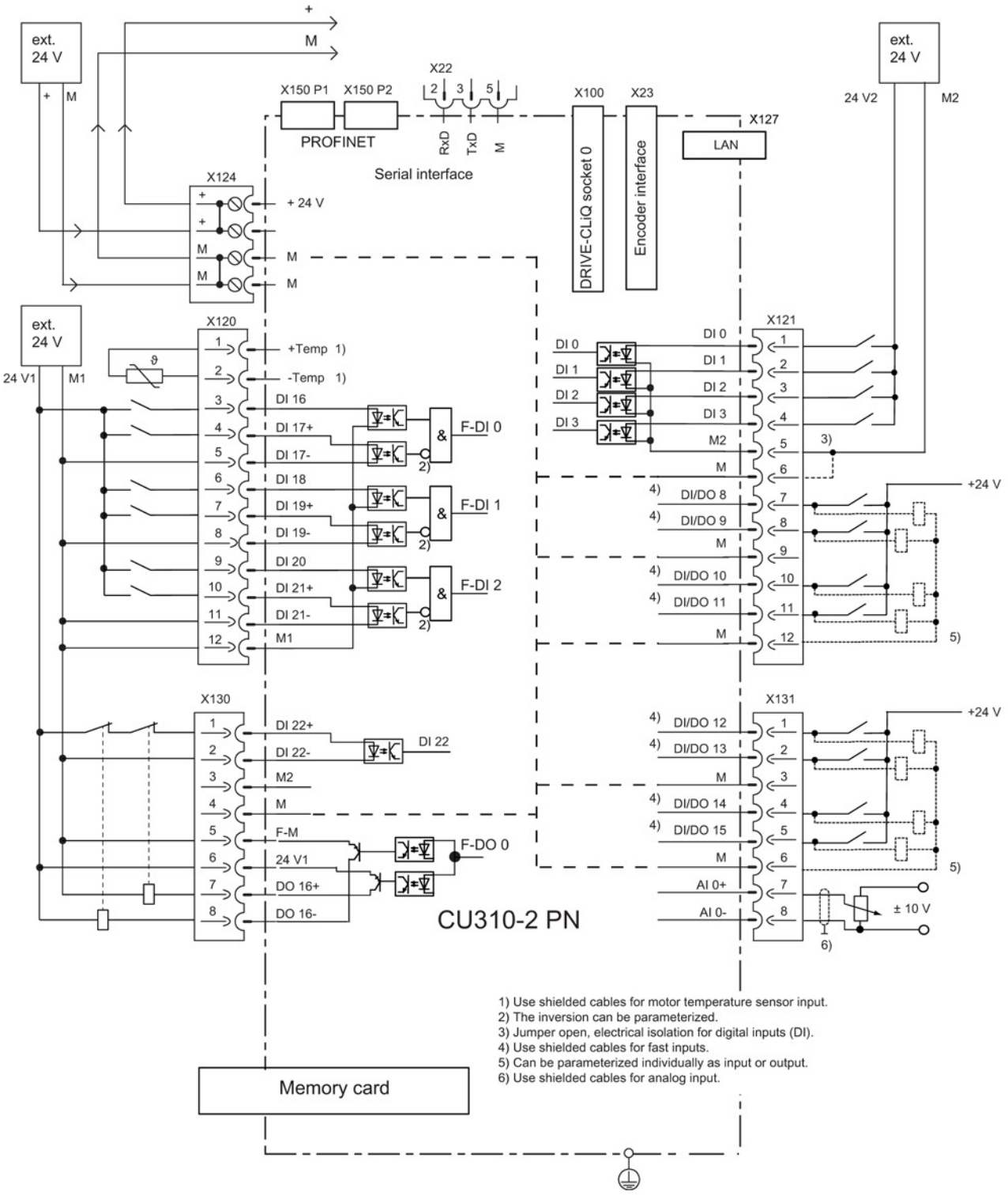

Figure 7-7 Connection example, CU310-2 PN with safety function

7.3.4 Meaning of the LEDs

7.3.4.1 Function of the LEDs

There are four LEDs on the front panel of the CU310-2 PN's housing (see CU310-2 PN Interface Overview (Page 263).)

Table 7- 16 LEDs

RDY	Ready
COM	Status of the fieldbus communication
OUT>5V	Encoder current supply > 5 V (TTL/HTL)
MOD	Operating mode (reserved)

The various LEDs are switched on and off as the control unit is powered up (depending on the phase the system is currently in). When switched on, the color of the LEDs shows the status of the corresponding power-up phase (see Behavior of the LEDs during booting (Page 284)).

In the event of a fault, power up will be ended in the corresponding phase. The LEDs that are switched on retain their color at this particular instant in time, so that the fault can be determined based on the combination of LEDs that are switched on (bright) and switched off (dark).

All the LEDs go out briefly if the CU310-2 PN has powered up without error. The system is ready for operation when the LED "RDY" is permanently green.

All the LEDs are controlled by the software loaded during operation (see Behavior of the LEDs in the operating state (Page 285).)

7.3.4.2 Behavior of the LEDs during booting

Table 7- 17 Load software

LED				State	Comment
RDY	COM	OUT>5V	MOD		
Orange	Orange	Orange	Orange	POWER ON	All LEDs light up for approx. 1 s
Red	Red	Off	Off	Hardware reset	After pressing the RESET button the LEDs light up for approx. 1 s
Red	Red	Off	Off	BIOS loaded	-
Red Flashing light 2 Hz	Red	Off	Off	BIOS error	Error occurred while loading the BIOS
Red Flashing light 2 Hz	Red Flashing light 2 Hz	Off	Off	File error	Memory card not inserted or faulty
					Software on memory card not present or corrupted

Table 7- 18 Firmware

LED				State	Comment
RDY	COM	OUT>5V	MOD		
Red	Orange	Off	Off	Firmware loading	COM-LED flashing without specific flashing frequency
Red	Off	Off	Off	Firmware loaded	-
Off	Red	Off	Off	Firmware check (no CRC error)	-
Red Flashing light 0.5 Hz	Red Flashing light 0.5 Hz	Off	Off	Firmware check (CRC error)	CRC is incorrect
Orange	Off	Off	Off	Firmware initialization	-

7.3.4.3 Behavior of the LEDs in the operating state

Table 7- 19 Description of the LEDs during operation of the CU310-2 PN

LED	Color	State	Description / cause	Remedy
RDY (READY)	-	OFF	The electronics power supply is missing or outside the permissible tolerance range.	Check the power supply
	Green	Continuous light	The unit is ready for operation. Cyclic DRIVE-CLiQ communication is in progress.	-
		Flashing light 0.5 Hz	Commissioning/reset	-
		Flashing light 2 Hz	Writing to the memory card.	-
	Red	Flashing light 2 Hz	General fault	Check parameter assignment/configuration
	Red/green	Flashing light 0.5 Hz	The control unit is ready for operation, but there are no software licenses.	Install the missing licenses.
	Orange	Flashing light 0.5 Hz	Updating the firmware of the DRIVE-CLiQ components.	-
		Flashing light 2 Hz	DRIVE-CLiQ component firmware update completed. Waiting for POWER ON of the corresponding components.	Switch on the component.
	Green/orange or red/orange	Flashing light 2 Hz	Recognition of the component via LED is activated (see SINAMICS S120/S150 List Manual.) **Note:** Both options depend on the LED status when component recognition is activated.	-
COM	-	OFF	Cyclic communication has not (yet) taken place. **Note:** PROFIdrive is ready for communication when the Control Unit is ready (see LED: RDY).	-
	Green	Continuous light	Cyclic communication is taking place.	-
		Flashing light 0.5 Hz	Full cyclic communication is not yet taking place. **Possible causes:** • The controller is not transferring any setpoints. • During isochronous operation, no GC (Global Control) or a faulty GC is transferred by the controller.	-
	Red	Flashing light 0.5 Hz	The PROFIBUS master is sending a faulty parameter assignment or the configuration file is corrupted.	Modify the configuration between master/controller and control unit.
		Flashing light 2 Hz	Cyclic bus communication has been interrupted or could not be established.	Rectify the fault in bus communication.

LED	Color	State	Description / cause	Remedy
MOD	-	OFF	-	-
OUT > 5 V	-	OFF	-	-
	Orange	Continuous light	The voltage of the electronics power supply for the measuring system is 24 V. [1]	

[1] Make sure that the encoder connected is designed for a 24 V supply. Connecting a 5 V encoder to a 24 V supply can result in destruction of the encoder electronics.

7.3.5 Dimension drawing

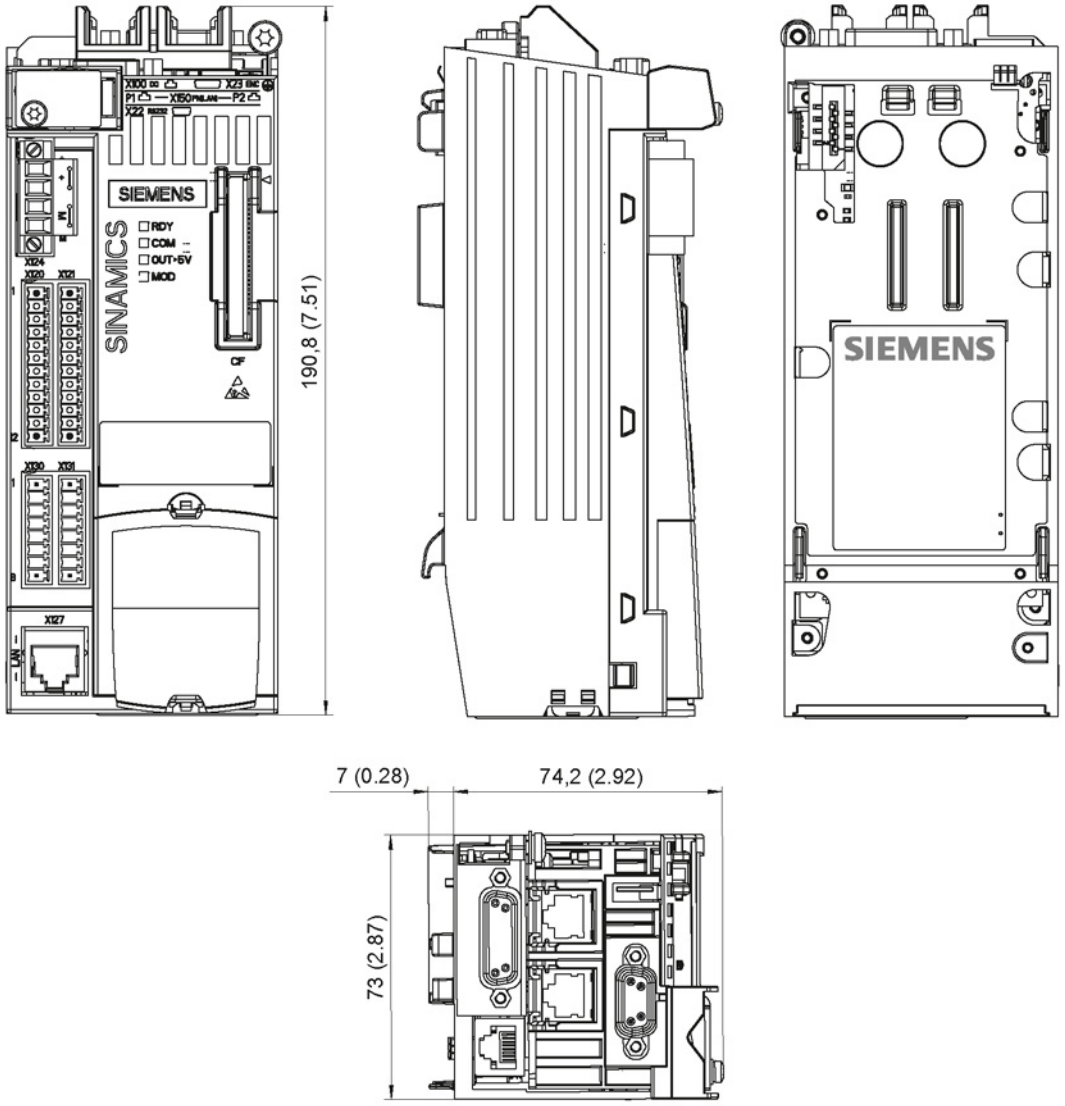

Figure 7-8 Dimension drawing, Control Unit CU310-2 PN, all data in mm (inches)

7.3.6 Technical data

Table 7- 20 Technical data for CU310-2 PN

6SL3040-1LA01-0AA0	Unit	Value
Electronics power supply		
Voltage	V_{DC}	DC 24 (20,4 … 28,8)
Current (without DRIVE-CLiQ and digital outputs)	A_{DC}	0,8
Power loss	W	< 20
Maximum DRIVE-CLiQ cable length	m	100
PE/ground connection	At the housing with M4/3 Nm screw	
Response time	The response time of digital inputs/outputs depends on the evaluation.[1)]	
Weight	kg	0,95

[1)] You will find information on this topic in the SINAMICS S120/S150 List Manual, Chapter "Function block diagrams."

7.4 Control Unit CU310-2 DP (PROFIBUS)

7.4.1 Description

The CU310-2 DP Control Unit (PROFIBUS) is a control module for single-motor drives in which the open-loop and closed-loop control functions of the drive are implemented.
It controls the Power Modules in the blocksize format via the PM-IF interface. Power Modules Chassis are controlled from the Control Unit via the DRIVE-CLiQ interface.

The CU310-2 DP is hot-pluggable. It can be used with firmware version 4.4 or higher.

The table shows an overview of the interfaces on the CU310-2 DP.

Table 7- 21 Overview of interfaces on the CU310-2 DP

Type	Quantity
Isolated digital inputs	11
Non-isolated digital inputs/outputs	8
Isolated digital output	1
Non-isolated analog input	1
DRIVE-CLiQ interface	1
PROFIBUS interface	1
Serial interface (RS232)	1
Encoder interface (HTL/TTL/SSI)	1
LAN (Ethernet)	1
Temperature sensor input	1
EP terminal	1
Measuring sockets	3

7.4.2 Interface description

7.4.2.1 Overview

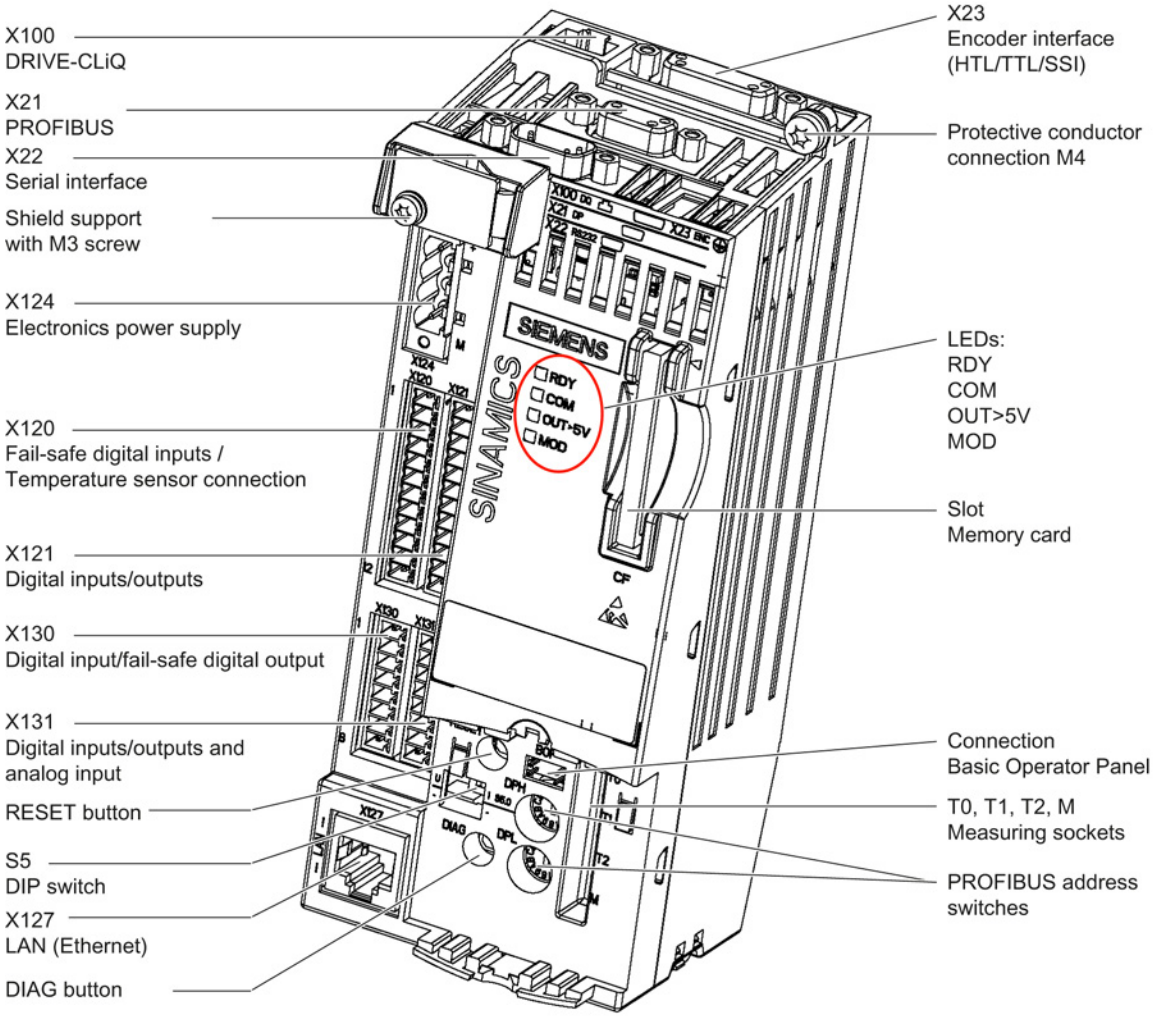

Figure 7-9 CU310-2 DP interface overview

The interface to the Power Module is located at the rear of the CU310-2 DP.

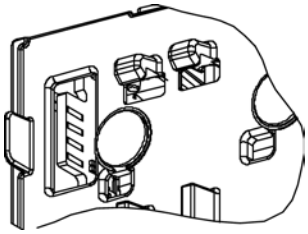

Figure 7-10 CU310-2 DP interface to the Power Module (PM-IF)

7.4.2.2 X21 PROFIBUS

The PROFIBUS interface X21 can be operated isochronously.

Table 7- 22 X21 PROFIBUS interface

	Pin	Signal name	Meaning	Range
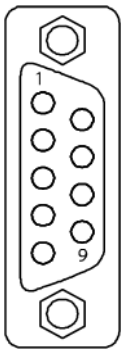	1	-	Not assigned	
	2	M24_SERV	Teleservice supply, ground	0 V
	3	RxD/TxD-P	Receive/transmit data P (B)	RS485
	4	CNTR-P	Control signal	TTL
	5	DGND	PROFIBUS data reference potential	
	6	VP	Supply voltage plus	5 V ± 10 %
	7	P24_SERV	Power supply for teleservice, + (24 V)	24 V (20.4 … 28.8 V)
	8	RxD/TxD-N	Receive/transmit data N (A)	RS485
	9	-	Not assigned	
Connector type	9-pin Sub-D socket			

Note

A teleservice adapter can be connected to the PROFIBUS interface X21 for remote diagnostics.
The power supply for the teleservice (terminals 2 and 7) can have a max. load of 150 mA.

PROFIBUS connector

For the first and last participants in a bus line, the terminating resistors must be switched in, otherwise, data transmission will not function correctly.

The terminating resistors are activated in the connector.

The cable shield must be connected at both ends over large-surface area contacts.

7.4.2.3 PROFIBUS address switch

The PROFIBUS address for the CU310-2 DP is set as a hexadecimal value on two rotary coding switches.
Values may be set between 0_{dec} (00_{hex}) and 127_{dec}($7F_{hex}$).
The upper rotary coding switch (H) is used to set the hexadecimal value for 16^1 and the lower rotary coding switch (L) is used to set the hexadecimal value for 16^0.

Table 7- 23 PROFIBUS address switch

Rotary coding switches	Significance	Examples		
		21_{dec}	35_{dec}	126_{dec}
		15_{hex}	23_{hex}	$7E_{hex}$
DP H	$16^1 = 16$	1	2	7
DP L	$16^0 = 1$	5	3	E

Setting the PROFIBUS address

The factory setting for the rotary coding switches is 0_{dec} (00_{hex}).

The PROFIBUS address is set as follows:

1. via a parameter (see SINAMICS S120/S150 List Manual)
   - To set the bus address for a PROFIBUS node using STARTER, first set the rotary code switches to 0_{dec} (00_{hex}) and 127_{dec} ($7F_{hex}$).
   - Then use the parameter to set the address to a value between 1 and 126.
2. via PROFIBUS address switch
   - The PROFIBUS address is set manually to a value between 1 and 126 on the two rotary coding switches. In this case the address is merely read out via the parameter.

Note

The rotary coding switches used to set the PROFIBUS address are found beneath the blanking cover (see CU310-2 DP Interface Overview (Page 289)

7.4.2.4 X22 serial interface (RS232)

Table 7- 24 X22 serial interface (RS232)

	Pin	Signal name	Technical data
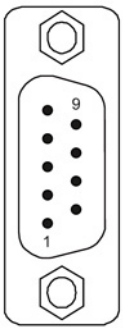	1	Reserved, do not use	
	2	XRXD_RS232	Receive data
	3	XTXD_RS232	Transmit data
	4	Reserved, do not use	
	5	GND	Ground
	6	Reserved, do not use	
	7	Reserved, do not use	
	8	Reserved, do not use	
	9	Reserved, do not use	
Connector type	9-pin SUB D connector		

Features

The maximum data rate is:

- 120 kBaud at a load capacity of 1.0 nF
- 20 kBaud at a load capacity of 2.5 nF

7.4.2.5 X23 HTL/TTL/SSI encoder interface

Table 7- 25 X23 HTL/TTL/SSI encoder interface

	Pin	Signal name	Technical data
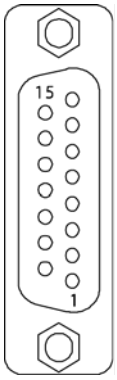	1	+Temp	KTY or PTC input
	2	SSI_CLK	SSI clock, positive
	3	SSI_XCLK	SSI clock, negative
	4	P encoder 5 V / 24 V	Encoder power supply
	5	P encoder 5 V / 24 V	
	6	P_Sense	Sense input, encoder power supply
	7	GND	Ground, encoder power supply
	8	M (-Temp)	Ground for KTY or PTC
	9	M_Sense	Ground sense input
	10	RP	R track positive
	11	RN	R track negative
	12	BN	B track negative
	13	BP	B track positive
	14	AN_SSI_XDAT	A track negative / SSI data negative
	15	AP_SSI_DAT	A track positive / SSI data positive
Connector type	15-pin Sub-D socket		
Measuring current via temperature sensor connection: 2 mA			

NOTICE

Risk of motor overheating for incorrectly connected KTY temperature sensor

A KTY temperature sensor connected with incorrect polarity cannot detect if the motor overheats.

- Make sure that you connect the KTY temperature sensor with the correct polarity.

Note

There are two ways of connecting the temperature sensor:

1. via X120, terminals 1 and 2
2. via X23, pins 1 and 8

Encoders that can be connected

Note

Use of bipolar and unipolar encoders

Use bipolar encoders.

When using unipolar encoders, the unused negative track signals can either be connected or connected to ground. This results in different switching thresholds.

Table 7- 26 Specification of measuring systems that can be connected

Parameter	Designation	Threshold	Min.	Type	Max.	Unit
Permissible signal level in bipolar mode[1]; (TTL, SSI, HTL bipolar at X23)[2][3]	U_{diff}		2,0		Vcc	V
Permissible signal frequency	f_S		-		500	kHz
Required edge clearance	t_{min}		100		-	ns
Permissible zero pulse (with $T_s = 1/f_s$)	Length		¼ · T_s		¾ · T_s	
	Center of the pulse position		50	135	220	degrees
Switching threshold in the unipolar mode[1] and signals AN_SSI_XDAT, BN, RN at X23 connected to M_Encoder	$U_{(Switch)}$	High [4]	8,4	10,6	13,1	V
		Low[4]	3,5	4,8	6,3	V
Switching thresholds in the unipolar mode (see SINAMICS S120/S150 List Manual) and signals AN_SSI_XDAT, BN, RN not connected to X23	$U_{(Switch)}$	High [4]	9	11,3	13,8	V
		Low[4]	5,9	7,9	10,2	V

1) See SINAMICS S120/S150 List Manual for setting the mode

2) Other signal levels according to the RS422 specification.

3) The absolute level of the individual signals varies between 0 V and Vcc of the measuring system.

4) See SINAMICS S120/S150 List Manual for setting the threshold

Encoder cables

Encoder type	Maximum encoder cable length in m
TTL[1)]	100
HTL unipolar[2)]	100
HTL bipolar	300
SSI [3)]	up to 100 (depending on the baud rate)

1) 100 m with remote sense

2) Because the transmission technology is more robust, the bipolar connection should always be used. The unipolar connection should only be used if the encoder type does not output push-pull signals.

3) For the cable length, see the diagram "Maximum cable lengths depending on the SSI baud rate for SSI encoders"

Note

Prefabricated cable for 5 V TTL encoder

When using a 5 V TTL encoder (6FX encoder), use connection cable 6FX8002-2CR00-xxx.

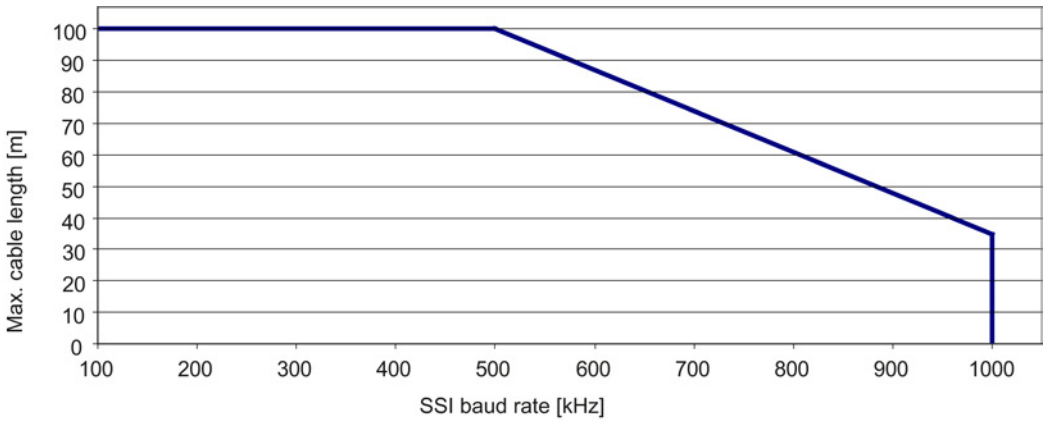

Figure 7-11 Maximum cable lengths depending on the SSI baud rate for SSI encoders

7.4.2.6 X100 DRIVE-CLiQ interface

Table 7- 27 X100 DRIVE-CLiQ interface

	Pin	Signal name	Technical data
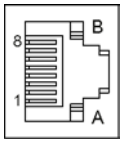	1	TXP	Transmit data +
	2	TXN	Transmit data -
	3	RXP	Receive data +
	4	Reserved, do not use	-
	5	Reserved, do not use	-
	6	RXN	Receive data -
	7	Reserved, do not use	-
	8	Reserved, do not use	-
	A	+ (24 V)	Power supply
	B	M (0 V)	Electronic ground
Connector type	DRIVE-CLiQ socket		

The blanking cover for the DRIVE-CLiQ port is included in the scope of delivery.

Blanking covers (50 pieces) Order number: 6SL3066-4CA00-0AA0

7.4.2.7 X120 digital inputs (fail-safe)/EP terminal/temperature sensor

Table 7- 28 X120 fail-safe digital inputs/temperature sensor input

	Terminal	Designation [1]		Technical data
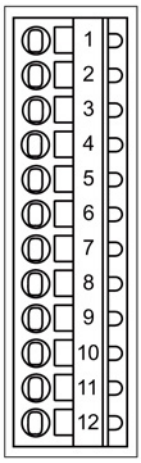	1	+ Temp [2]		Temperature sensors: KTY84-1C130/PTC Measuring current via temperature sensor connection: 2 mA
	2	- Temp [2]		
	3	DI 16	F-DI 0	Voltage: - 3 … 30 V Current consumption, typical: 6 mA at 24 VDC Input delay (typ.): [2] For "0" → "1": 50 µs For "1" → "0": 150 µs Level (incl. ripple): High signal level: 15 … 30 V Low signal level: -3 … 5 V Electrical isolation: M1: Reference potential for DO16, DI16, DI18 and DI20 DI17-/DI19-/DI21-: Reference potential for DI17/DI19/DI21
	4	DI17+ / EP +24 V3 (Enable Pulses)		
	5	DI17- / EP M3 (Enable Pulses)		
	6	DI 18	F-DI 1	
	7	DI 19+		
	8	DI 19-		
	9	DI 20	F-DI 2	
	10	DI 21+		
	11	DI 21-		
	12	M1		
Type: Spring-loaded terminal 1 (Page 437) Max. cross-section that can be connected: 1.5 mm²				

[1] DI: Digital input; DO: Digital output; F-DI: Fail-safe digital input

[2] Control of Chassis Power Modules: +Temp/-Temp deactivated, temperature input via terminal X41 of the Power Modules

[3] Pure hardware delay

The maximum cable length that can be connected is 30 m.

Fail-safe digital inputs

An F-DI consists of a digital input and a second digital input to which the cathode of the optocoupler is connected.

Temperature sensor input

NOTICE
Risk of motor overheating for incorrectly connected KTY temperature sensor A KTY temperature sensor connected with incorrect polarity cannot detect if the motor overheats. • Make sure that you connect the KTY temperature sensor with the correct polarity.

Further information regarding the temperature sensor may be found in the SINAMICS S120 Commissioning Manual, "Temperature sensors for SINAMICS components" section.

The maximum length of the temperature sensor cable is 300 m. The cables must be shielded. For cable lengths >100 m, cables with a cross-section of ≥1 mm² must be used.

EP terminal

The pulse inhibit function (EP) is only available when Integrated Basic Functions are enabled.

7.4.2.8 X121 digital inputs/outputs

Table 7- 29 X121 digital inputs and bidirectional digital inputs/outputs

	Terminal	Designation [1]	Technical data
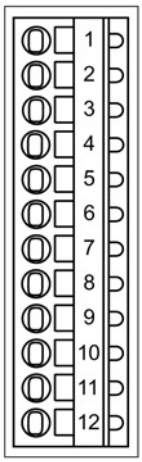	1	DI 0	Voltage: -3 … 30 VDC Current consumption, typical: 6 mA at 24 V Electrical isolation: via optocoupler Level (incl. ripple) High level: 15 … 30 V Low signal level: -3 … 5 V (at ≤ 2 mA) Input delay (typ.): For "0" → "1": 50 µs For "1" → "0": 150 µs protected against polarity reversal
	2	DI 1	
	3	DI 2	
	4	DI 3	
	5	M2	Reference potential for digital inputs DI 0 to DI 3
	6	GND	Ground reference for the electronics
	7	DI/DO 8	**As input:** Voltage: -3 … 30 VDC Current consumption, typical: 5 mA at 24 V Level (incl. ripple) High level: 15 … 30 V Low signal level: -3 … 5 V (at ≤ 2 mA) DI/DO 8, 9, 10, and 11 are rapid inputs [2] Input delay (typ.): For "0" → "1": 5 µs For "1" → "0": 50 µs **As output:** Voltage: 24 VDC Max. load current per output: 500 mA Output delay (typ. / max.)[3]: For "0" → "1": 150 µs / 400 µs For "1" → "0": 75 µs / 100 µs Short-circuit, ground fault, overload proof Automatic switch on again after overload trip Switching frequency: for ohmic load: Max. 100 Hz For inductive load: Max. 0.5 Hz For lamp load: Max. 10 Hz Maximum lamp load: 5 W
	8	DI/DO 9	
	9	GND	
	10	DI/DO 10	
	11	DI/DO 11	
	12	GND	
Type: Spring-loaded terminal 1 (Page 437) Max. cross-section that can be connected: 1.5 mm^2			

[1] DI: Digital input; DI/DO: Bidirectional digital input/output

[2] The rapid inputs can be used as probe inputs or as inputs for the external zero mark

[3] Data for: V_{cc} = 24 V; load 48 Ω; high ("1") = 90% V_{out}; low ("0") = 10% V_{out}

The maximum cable length that can be connected is 30 m.

Note

An open input is interpreted as "low".

Terminal M2 must be connected so that the digital inputs (DI0 ... DI3) can be used. This is achieved through one of the following measures:

- Provide the ground reference of the digital inputs.
- A jumper to terminal M (this removes the electrical isolation for these digital inputs).

Note

A 24 V supply voltage must be connected to terminal X124 for the digital outputs to be used.

If momentary interruptions in the voltage occur in the 24 V supply, the digital outputs are deactivated until the interruption has been rectified.

7.4.2.9 X124 Electronics power supply

Table 7- 30 X124 Electronics power supply

	Terminal	Designation	Technical data
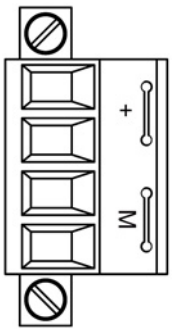	+	Electronics power supply	Voltage: 24 VDC (20.4 ... 28.8 VDC) Current consumption: Max. 1.0 A (without DRIVE-CLiQ or digital outputs) Max. current via jumper in connector: 20 A (15 A according to UL/CSA)
	+	Electronics power supply	
	GND	Electronics ground	
	GND	Electronics ground	
Type: Screw-type terminal 2 (Page 437) Max. cross-section that can be connected: 2.5 mm^2			

The screw terminal must be tightly screwed using a flat-bladed screwdriver.

The maximum cable length that can be connected is 10 m.

If the 24 V supply is not connected, the digital outputs of the following interfaces cannot be used:

- X121 (DO8 to DO11)
- X131 (DO12 to DO 15)

Note

The two "+" and/or "M" terminals are jumpered in the connector. This ensures that the supply voltage is looped through.

The current consumption increases by the value for the DRIVE-CLiQ participant and digital outputs.

7.4.2.10 X127 LAN (Ethernet)

Table 7- 31 X127 LAN (Ethernet)

	Pin	Signal name	Technical data
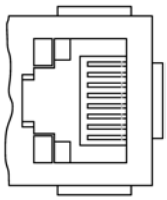	1	TXP	Ethernet transmit data +
	2	TXN	Ethernet transmit data -
	3	RXP	Ethernet receive data +
	4	Reserved, do not use	-
	5	Reserved, do not use	-
	6	RXN	Ethernet receive data -
	7	Reserved, do not use	-
	8	Reserved, do not use	-
Connector type	RJ45 socket		

Note

The Ethernet interface supports Auto MDI(X). It is therefore possible to use both crossed and uncrossed cables to connect the devices.

7.4.2.11 X130 digital input (fail safe) digital output

Table 7- 32 X130 digital input / fail-safe digital output

	Terminal	Designation [1]		Technical data
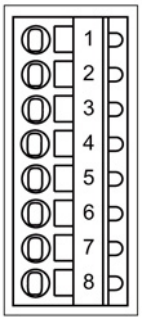	1	DI 22+		Voltage: -3 … 30 VDC Current consumption, typical: 6 mA at 24 V Electrical isolation: via optocoupler Level (incl. ripple) High level: 15 … 30 V Low signal level: -3 … 5 V (at ≤ 2 mA) Input delay (typ.): For "0" → "1": 50 µs For "1" → "0": 150 µs protected against polarity reversal
	2	DI 22-		
	3	M2		Reference potential for digital inputs DI 0 to DI 3
	4	GND		Ground reference for the electronics
	5	M1		Reference potential for DI 16, DI 18, DI 20 and DO 16
	6	24 V1		Power supply for DO 16
	7	DO 16+	F-DO 0 [2]	Voltage: 24 VDC Max. load current per output: 500 mA Output delay (typ./max.): For "0" → "1": 150 µs / 400 µs For "1" → "0": 75 µs / 100 µs Short-circuit, ground fault, overload proof Automatic switch on again after overload trip
	8	DO 16-		
Type: Spring-loaded terminal 1 (Page 437) Max. cross-section that can be connected: 1.5 mm^2				

[1] DI: Digital input/DO: Digital output

[2] F-DO: Fail-safe digital output

The maximum cable length that can be connected is 30 m.

Fail-safe digital output

The F-DO consists of a high-side switch and a low-side switch.

For applications without the safety function, the high-side switch may be used as an additional digital output. The low side switch is not available.

Note

If the 24 V supply is briefly interrupted, the digital output is deactivated until the interruption has been rectified.

7.4.2.12 X131 digital inputs/outputs and analog input

Table 7- 33 X131 bidirectional digital inputs/outputs and analog input

	Terminal	Designation [1]	Technical data
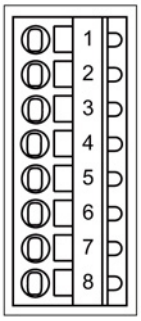	1	DI/DO 12	**As input:** Voltage: -3 … 30 VDC Current consumption, typical: 5 mA at 24 V Level (incl. ripple) High level: 15 … 30 V Low signal level: -3 … 5 V (at ≤ 2 mA) DI/DO 12, 13, 14, and 15 are rapid inputs [2] Input delay (typ.): For "0" → "1": 5 µs For "1" → "0": 50 µs **As output:** Voltage: 24 VDC Max. load current per output: 500 mA Output delay (typ. / max.)[3]: For "0" → "1": 150 µs / 400 µs For "1" → "0": 75 µs / 100 µs Short-circuit, ground fault, overload proof Automatic switch on again after overload trip Switching frequency: For ohmic load: Max. 100 Hz For inductive load: Max. 0.5 Hz For lamp load: Max. 10 Hz Maximum lamp load: 5 W
	2	DI/DO 13	
	3	GND	
	4	DI/DO 14	
	5	DI/DO 15	
	6	GND	Electronics ground
	7	AI 0+	The analog input can be switched between a current or voltage input using DIP switch S5. **Common-mode range**: ±12 V **As voltage input**: -10 … 10 V; R_i > 100 kΩ Resolution: 12-bit + sign (with respect to the maximum range that can be resolved -11 V ... 11 V) **As current input**: -20 ... 20 mA; Ri = 250 Ω Resolution: 11-bit + sign (related to -22 … 22 mA) Max. range that can be resolved: -44 … 44 mA
	8	AI 0-	
Type: Spring-loaded terminal 1 (Page 437) Max. cross-section that can be connected: 1.5 mm^2			

[1] DI/DO: bidirectional digital input/output; AI: Analog input

[2] The rapid inputs can be used as probe inputs or as inputs for the external zero mark.

[3] Data for: V_{cc} = 24 V; load 48 Ω; high ("1") = 90% V_{out}; low ("0") = 10% V_{out}

The maximum cable length that can be connected is 30 m.

Note

Permissible voltage values at the analog input

The common-mode range must not be violated in order to avoid incorrect results of the analog-digital conversion. This means that the analog differential voltage signals can have a maximum offset voltage of +/- 15 V with respect to the reference potential.

Note

A 24 V supply must be connected to terminal X124 for the digital outputs to be used.

If momentary interruptions in the voltage occur in the 24 V supply, the digital outputs are deactivated until the interruption has been rectified.

7.4.2.13 Measuring sockets

Table 7- 34 Measuring sockets T0, T1, T2

	Socket	Function	Technical data
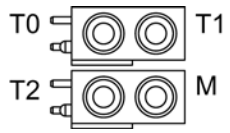	T0	Measuring socket 0	Voltage: 0 … V Resolution: 8 bits Load current: max. 3 mA Continued-short-circuit-proof The reference potential is terminal M
	T1	Measuring socket 1	
	T2	Measuring socket 2	
	GND	Ground	
The measuring sockets are only suitable for multiple-spring wire plugs with a diameter of 2 mm.			

Note

Measuring sockets support commissioning and diagnosis. It must not be connected for normal operation.

7.4.2.14 S5 DIP switch

DIP switch S5 is used to switch the analog input between voltage input or current input. It is located under the blanking cover (see CU310-2 PN Interface Overview (Page 263).)

Table 7- 35 DIP switch S5 - switchover between voltage/current

	Switch	Function
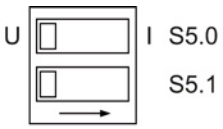	S5.0	Switchover between voltage (U) / current (I)
	S5.1	Not assigned

7.4.2.15 DIAG button

The DIAG pushbutton is reserved for service functions.

7.4.2.16 RESET button

Pressing the RESET button restarts the CU310-2 DP after expiry of a preset time. A data backup is run at the same time. This means that all the settings are retained.

7.4.2.17 Memory card

Inserting the memory card

Use only memory cards manufactured by Siemens to run the CU310-2 DP.

Insert the memory card into the CU310-2 DP so that the arrow on the card's label (on the left, next to the word Siemens) points to the arrow on the device.

Figure 7-12 CU310-2 DP Inserting the memory card

The memory card in a faulty CU310-2 DP

If you are returning a faulty CU310-2 DP to Siemens, remove the memory card and keep it in a safe place.
This ensures that all your saved data (firmware, licenses, parameters) will be available to you immediately again to commission a replacement unit.

7.4.3 Connection examples

CU310-2 DP without safety function

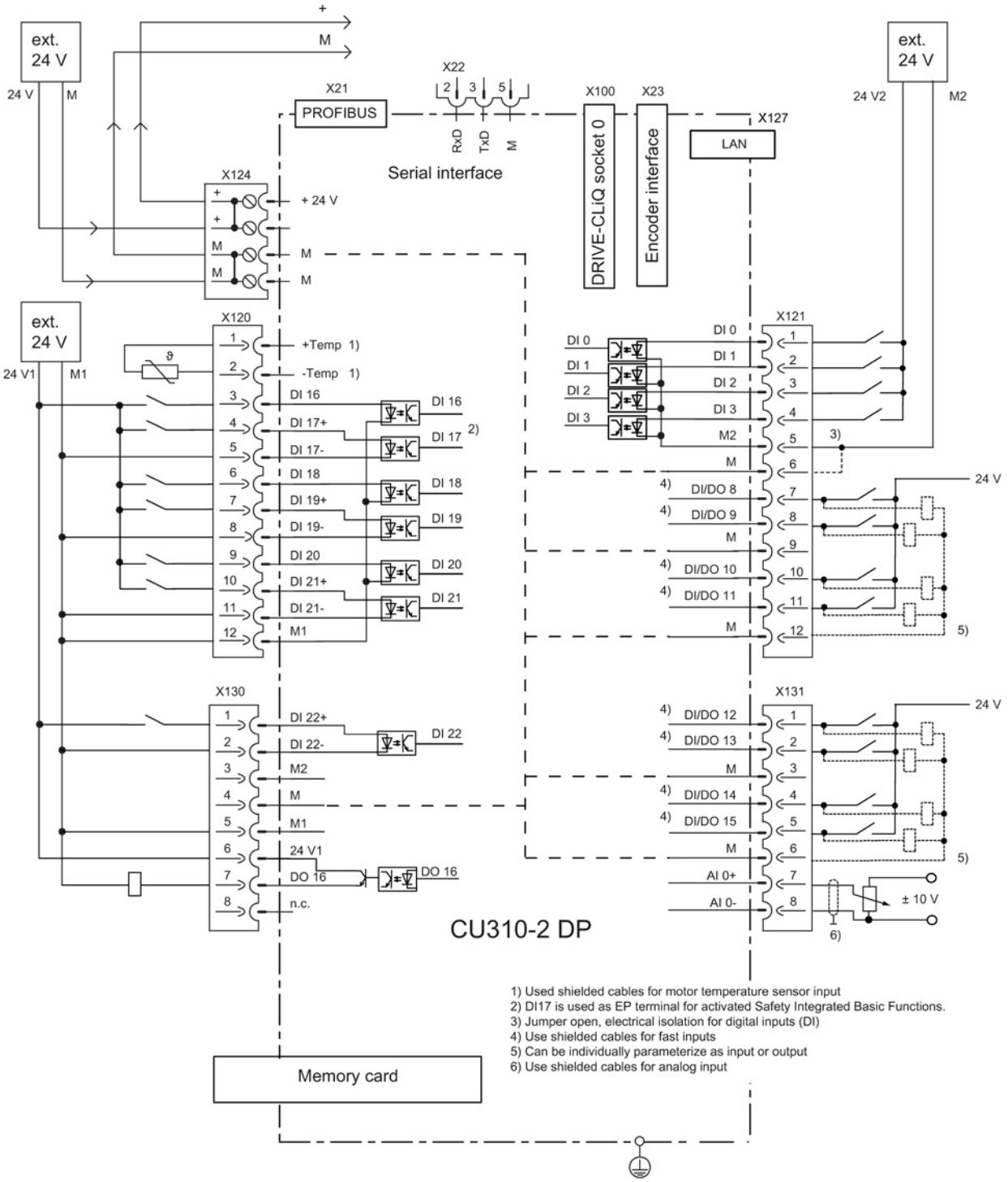

Figure 7-13 Connection example, CU310-2 DP without safety function

CU310-2 DP with safety function

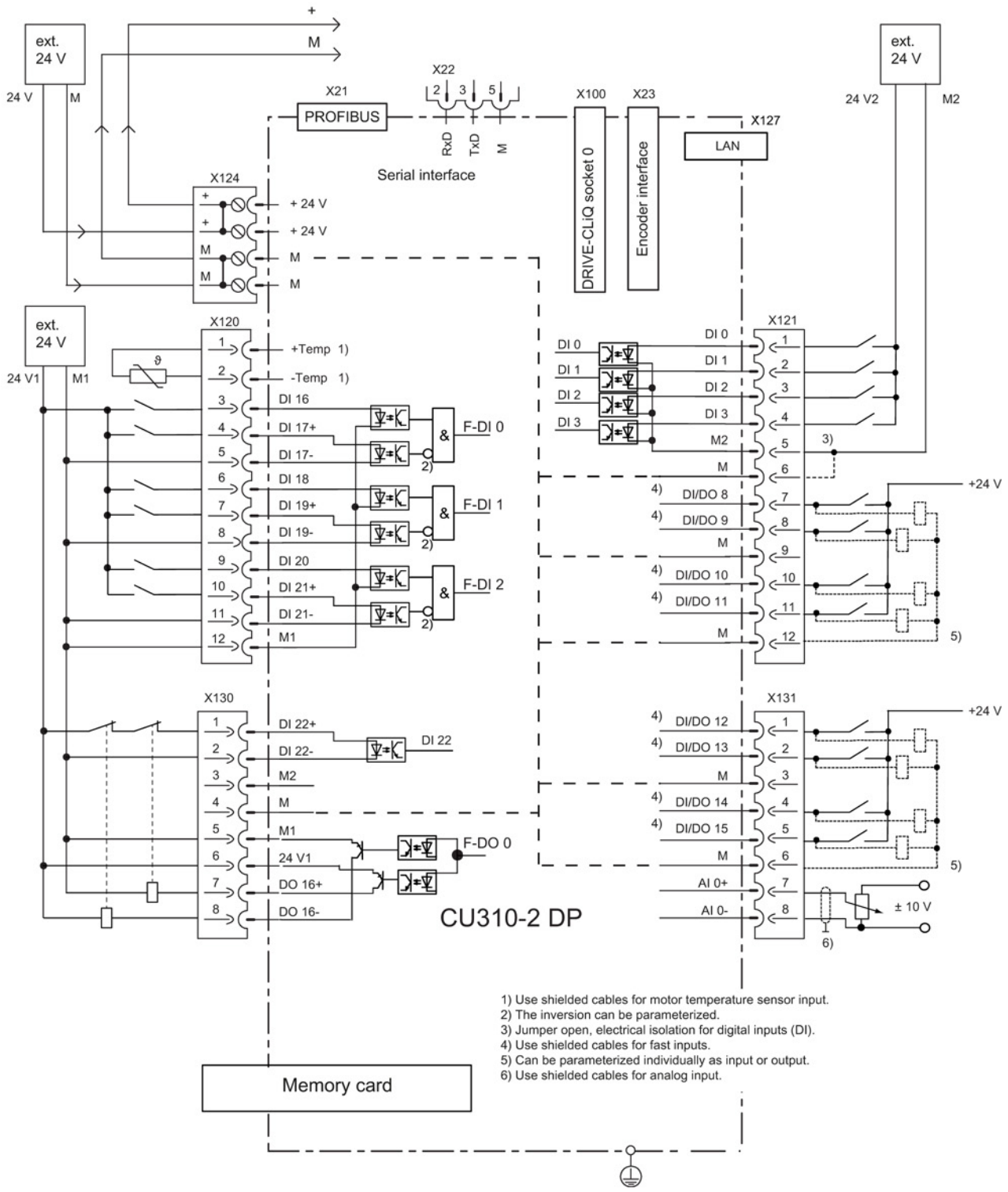

Figure 7-14 Connection example, CU310-2 DP with safety function

7.4.4 Meaning of the LEDs

7.4.4.1 Function of the LEDs

There are four LEDs on the front panel of the CU310-2 DP housing (see CU310-2 DP Interface Overview (Page 289).)

Table 7- 36 LEDs

RDY	Ready
COM	Status of the fieldbus communication
OUT>5V	Encoder current supply > 5 V (TTL/HTL)
MOD	Operating mode (reserved)

The various LEDs are switched on and off as the control unit is powered up (depending on the phase the system is currently in). When switched on, the color of the LEDs shows the status of the corresponding power-up phase (see LED display during power up (Page 311))

In the event of a fault, power up will be ended in the corresponding phase. The LEDs that are switched on retain their color at this particular instant in time, so that the fault can be determined based on the combination of LEDs that are switched on (bright) and switched off (dark).

All the LEDs go out briefly if the CU310-2 DP has powered up without error. The system is ready for operation when the LED "RDY" is permanently green.

All the LEDs are controlled by the software loaded during operation (see Behavior of the LEDs in the operating state (Page 312)).

7.4.4.2 Behavior of the LEDs during booting

Table 7- 37 Load software

LED				State	Comment
RDY	COM	OUT > 5V	MOD		
Orange	Orange	Orange	Orange	POWER ON	All LEDs light up for approx. 1 s
Red	Red	Off	Off	Hardware reset	After pressing the RESET button the LEDs light up for approx. 1 s
Red	Red	Off	Off	BIOS loaded	-
Red Flashing light 2 Hz	Red	Off	Off	BIOS error	Fault occurred while loading the BIOS
Red Flashing light 2 Hz	Red Flashing light 2 Hz	Off	Off	File error	Memory card not inserted or faulty
					Software on memory card not present or corrupted

Table 7- 38 Firmware

LED				State	Comment
RDY	COM	OUT > 5V	MOD		
Red	Orange	Off	Off	Firmware loading	COM-LED flashing without specific flashing frequency
Red	Off	Off	Off	Firmware loaded	-
Off	Red	Off	Off	Firmware check (no CRC error)	-
Red Flashing light 0.5 Hz	Red Flashing light 0.5 Hz	Off	Off	Firmware check (CRC error)	CRC is incorrect
Orange	Off	Off	Off	Firmware initialization	-

7.4.4.3 Behavior of the LEDs in the operating state

Table 7- 39 Description of the LEDs during operation of the CU310-2 DP

LED	Color	State	Description / cause	Remedy
RDY (READY)	-	OFF	The electronics power supply is missing or outside the permissible tolerance range.	Check the power supply
	Green	Continuous light	The unit is ready for operation. Cyclic DRIVE-CLiQ communication is in progress.	-
		Flashing light 0.5 Hz	Commissioning/reset	-
		Flashing light 2 Hz	Writing to the memory card.	-
	Red	Flashing light 2 Hz	General fault	Check parameter assignment/configuration
	Red/green	Flashing light 0.5 Hz	The control unit is ready for operation, but there are no software licenses.	Install the missing licenses.
	Orange	Flashing light 0.5 Hz	Updating the firmware of the DRIVE-CLiQ components.	-
		Flashing light 2 Hz	DRIVE-CLiQ component firmware update completed. Waiting for POWER ON of the corresponding components.	Switch on the component.
	Green/orange or red/orange	Flashing light 2 Hz	Recognition of the component via LED is activated (see SINAMICS S120/S150 List Manual). Note: Both possibilities depend on the status of the LED when activating.	-
COM	-	OFF	Cyclic communication is not (yet) running. Note: The PROFIdrive is ready for communication when the Control Unit is ready for operation (see LED: RDY).	-
	Green	Continuous light	Cyclic communication is taking place.	-
		Flashing light 0.5 Hz	Cyclic communication is not fully established yet. Possible causes: - The controller is not transmitting any setpoints. - In isochronous mode, the controller is not sending a GC (Global Control) or is sending a defective GC.	-
	Red	Flashing light 0.5 Hz	The PROFIBUS master is sending a faulty parameter assignment or the configuration file is corrupted.	Modify the configuration between master/controller and control unit.
		Flashing light 2 Hz	Cyclic bus communication has been interrupted or could not be established.	Rectify the fault in bus communication.

LED	Color	State	Description / cause	Remedy
MOD	-	OFF	-	-
OUT > 5 V	-	OFF	-	-
	Orange	Continuous light	The voltage of the electronics power supply for the measuring system is 24 V. [1]	

[1] Make sure that the encoder connected is designed for a 24 V supply. Connecting a 5 V encoder to a 24 V supply can result in destruction of the encoder electronics.

7.4.5 Dimension drawing

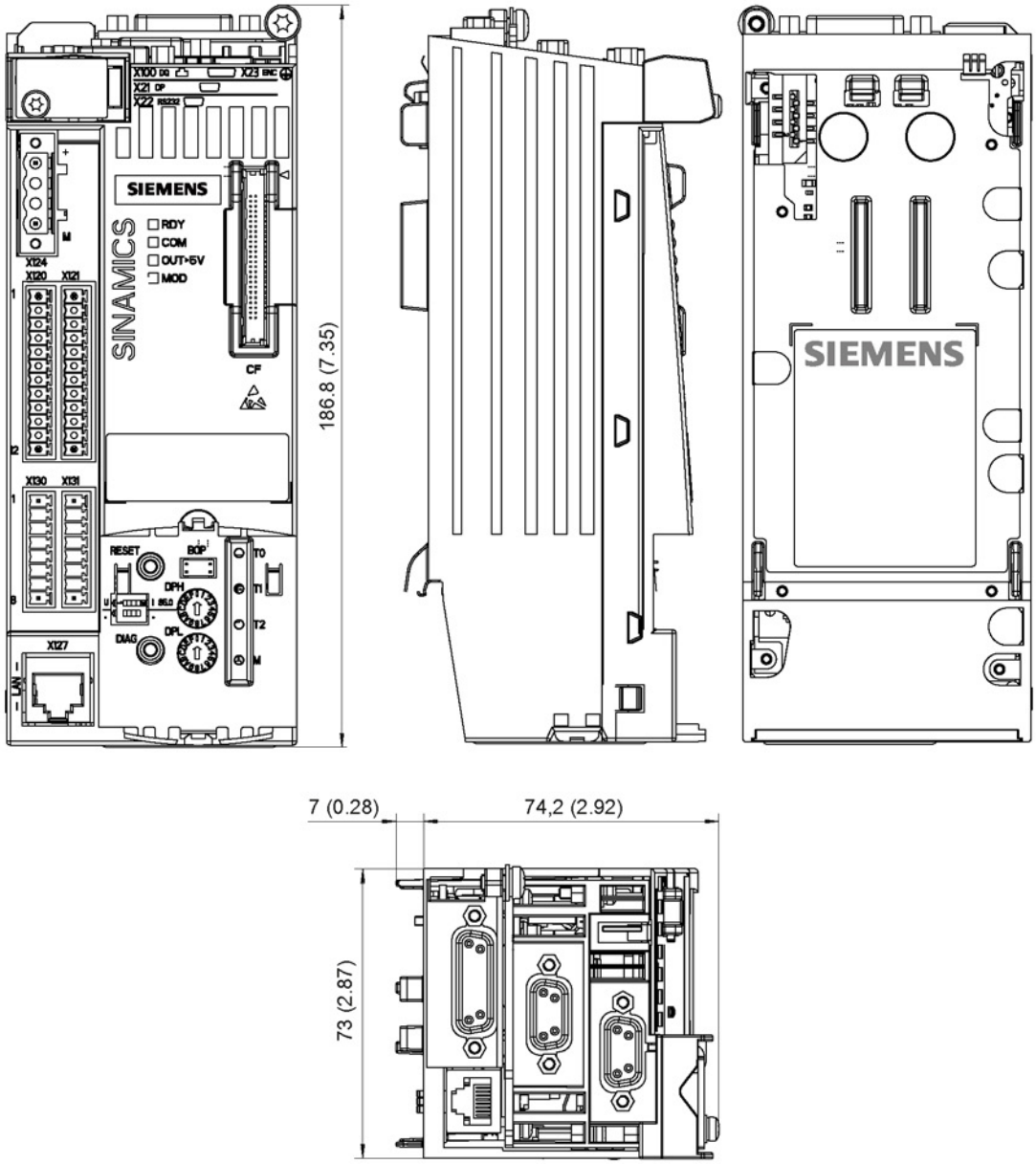

Figure 7-15 Dimension drawing, Control Unit CU310-2 DP, all data in mm (inches)

7.4.6 Technical data

Table 7- 40 Technical data of the CU310-2 DP

6SL3040-1LA00-0AA0	Unit	Value
Electronics power supply		
Voltage	V_{DC}	24 DC (20.4 ... 28.8)
Current (without DRIVE-CLiQ and digital outputs)	A_{DC}	0.8
Power loss	W	< 20
Maximum DRIVE-CLiQ cable length	m	100
PE/ground connection	At the housing with M4/3 Nm screw	
Response time	The response time of digital inputs/outputs depends on the evaluation.[1)]	
Weight	kg	0,95

[1)] You will find information on this topic in the SINAMICS S120/S150 List Manual, Chapter "Function block diagrams".

7.5 Control Unit Adapter CUA31

7.5.1 Description

The CUA31 Control Unit Adapter is used to connect a Power Module blocksize to an existing DC/AC group with a higher-level control module, e.g. a CU320-2. Since the closed-loop control is realized externally, for operation, a SINAMICS, SIMOTION, or SINUMERIK closed-loop control is always required for several axes.

The Control Unit Adapter CUA31 has the following interfaces (ports):

Table 7- 41 Interface overview of the CUA31

Type	Number
DRIVE-CLiQ interface	3
EP terminal/temperature sensor	1
Power Module Interface (PM-IF)	1
24 V electronics power supply	1

7.5.2 Interface description

7.5.2.1 Overview

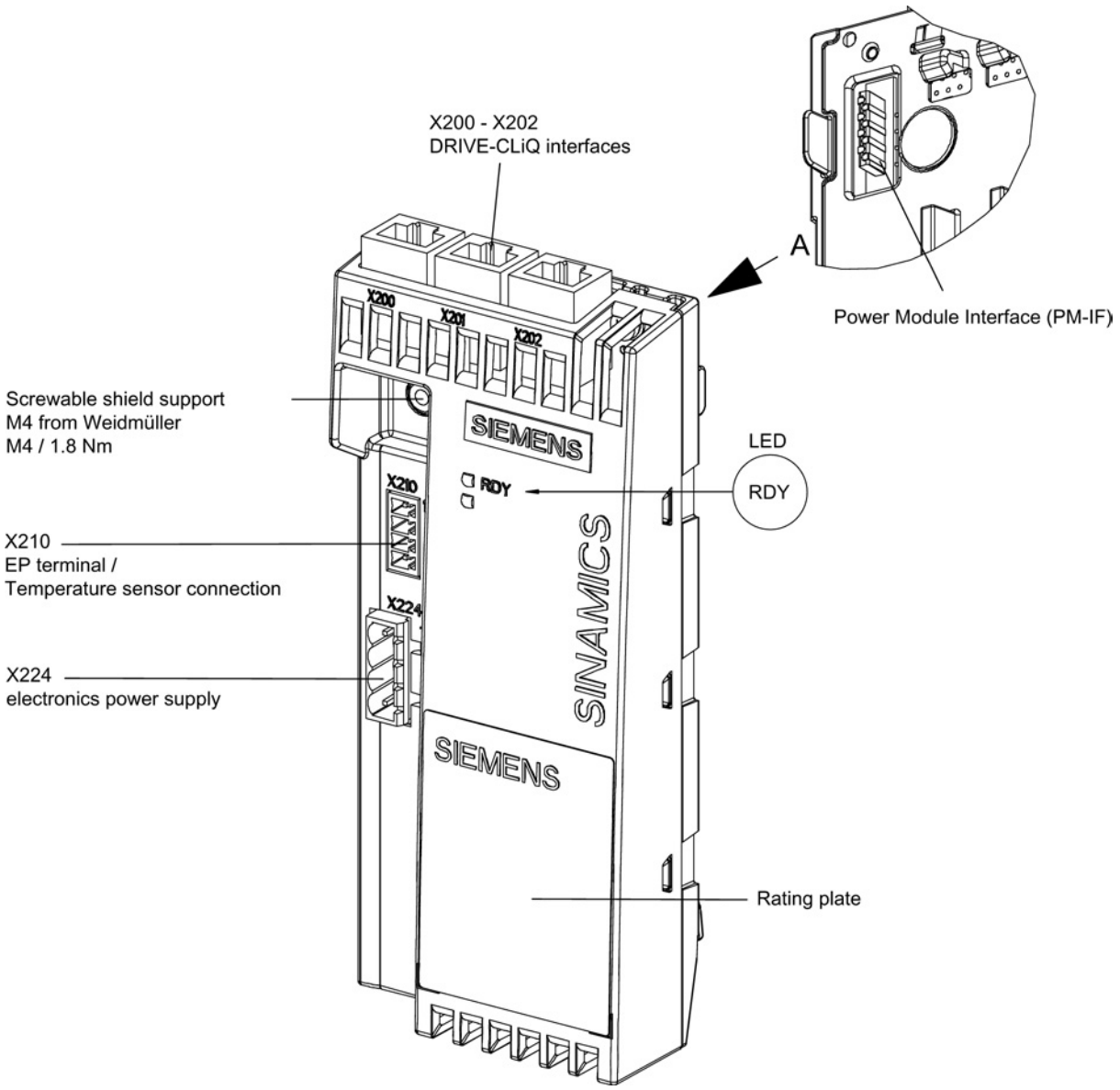

Figure 7-16 Interface overview of the CUA31

7.5.2.2 X200-X202 DRIVE-CLiQ interfaces

Table 7- 42 X200-X202 DRIVE-CLiQ interfaces

	Pin	Signal name	Technical data
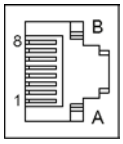	1	TXP	Transmit data +
	2	TXN	Transmit data -
	3	RXP	Receive data +
	4	Reserved, do not use	
	5	Reserved, do not use	
	6	RXN	Receive data -
	7	Reserved, do not use	
	8	Reserved, do not use	
	A	+ (24 V)	Power supply
	B	M (0 V)	Electronic ground
Connector type	DRIVE-CLiQ socket		

The blanking covers for the DRIVE-CLiQ interfaces are included in the scope of delivery.

Blanking plate from the Yamaichi company, order number: Y-ConAS-13

7.5.2.3 X210 EP terminal / temperature sensor

Table 7- 43 X210 EP terminal / temperature sensor input

	Terminal	Function	Technical data
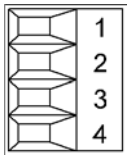	1	+ Temp [1]	Temperature sensor KTY84–1C130/PTC
	2	- Temp [1]	
	3	EP +24 V (Enable Pulses)	Supply voltage: 24 V DC (20.4 ... 28.8 V) Current consumption: 10 mA Isolated input Signal propagation delays: L → H: 100 µs H → L: 1000 µs
	4	EP M1 (Enable Pulses)	
Type: Screw-type terminal 1 (Page 437) Max. cross-section that can be connected 1.5 mm²			

[1] Further information regarding the temperature sensor may be found in the SINAMICS S120 Commissioning Manual, Section "Temperature sensors for SINAMICS components."

Temperature sensor input

The temperature sensor is required for motors where the temperature value is not transmitted via DRIVE-CLiQ.

NOTICE

Risk of motor overheating for incorrectly connected KTY temperature sensor

A KTY temperature sensor connected with incorrect polarity cannot detect if the motor overheats.

- Make sure that you connect the KTY temperature sensor with the correct polarity.

The maximum length of the temperature sensor cable is 300 m. The cables must be shielded. For cable lengths >100 m, cables with a cross-section of ≥1 mm² must be used.

"Safe standstill" function

If the "Safe standstill" function is selected, a 24 V DC voltage must be connected to terminals 3 and 4. Upon removal, pulse inhibit is activated.

⚠ WARNING

Danger to life due to electric shock in the event of voltage flashovers at the temperature sensor

Voltage flashovers in the signal electronics can occur in motors without safe electrical separation of the temperature sensors.

- Use temperature sensors that fully comply with the specifications of the safety isolation.
- If safe electrical separation cannot be guaranteed (for linear motors or third-party motors, for example), use a Sensor Module External (SME120 or SME125) or Terminal Module TM120.

7.5.2.4 X224 electronics power supply

Table 7- 44 X224 electronics power supply

	Terminal	Function	Technical data
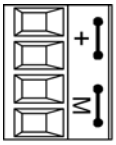	+	Electronics power supply	Voltage: 24 VDC (20.4 ... 28.8 VDC) Current consumption: max. 0.8 A (without DRIVE-CLiQ) Max. current via jumper in connector: 20 A (15 A according to UL/CSA)
	+	Electronics power supply	
	GND	Electronics ground	
	GND	Electronics ground	
Type: Screw-type terminal 2 (Page 437) Max. cross-section that can be connected: 2.5 mm^2			

The maximum cable length that can be connected is 10 m.

Note

The two "+" and/or "M" terminals are jumpered in the connector. This ensures that the supply voltage is looped through.

The current consumption increases by the value for the DRIVE-CLiQ node.

7.5.3 Connection example

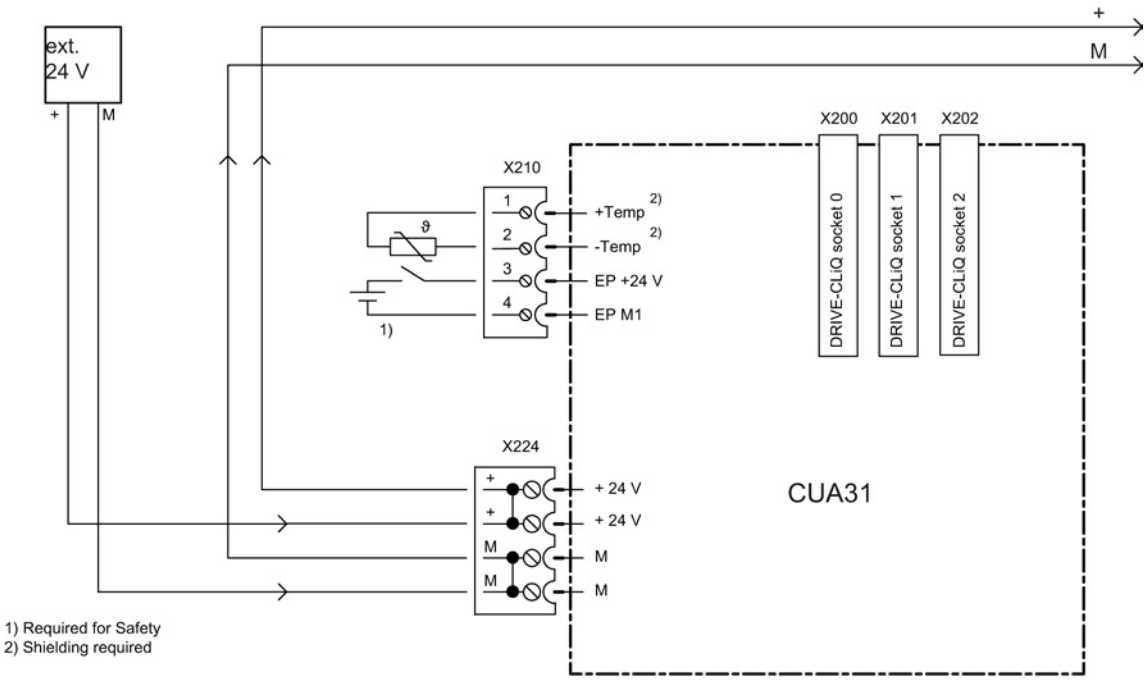

Figure 7-17 Connection example, CUA31

7.5.4 Meaning of the LEDs

Table 7- 45 Meaning of the LEDs at the Control Unit Adapter 31

LED	Color	Status	Description
RDY (READY)	Red	continuous light	At least one fault is present in this component.
	Green	continuous light	The component is ready for operation and cyclic DRIVE-CLiQ communication is taking place.

Cause and rectification of faults

Information about the cause and rectification of faults can be found in the SINAMICS S120 Commissioning Manual.

7.5.5 Dimension drawing

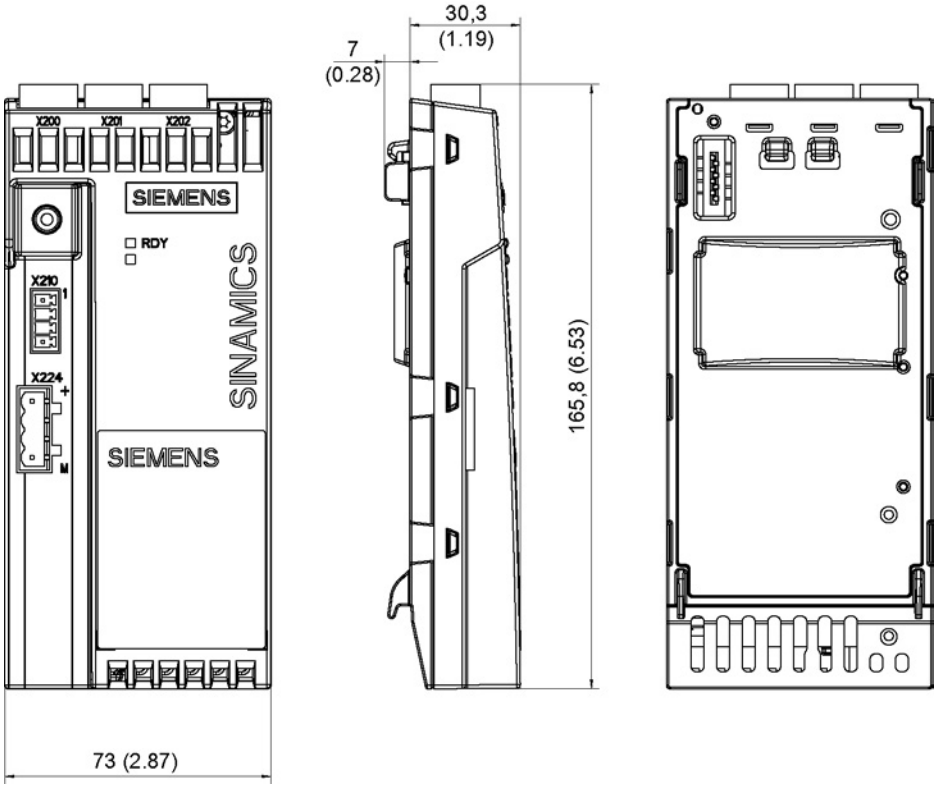

Figure 7-18 Dimension drawing of Control Unit Adapter CUA31, all data in mm and (inches)

7.5.6 Technical data

Table 7- 46 Technical data CUA31

6SL3040-0PA00-0AA0 / 6SL3040-0PA00-0AA1	Unit	Value
Electronics power supply		
Voltage	V_{DC}	24 DC (20.4 ... 28.8)
Current (without DRIVE-CLiQ)	A_{DC}	0.1
Power loss	W	2.4
Maximum DRIVE-CLiQ cable length		
CUA31 with order number 6SL3040-0PA00-0AA0	m	50
CUA31 from order number 6SL3040-0PA00-0AA1	m	100
Weight	kg	0,31

7.6 Control Unit Adapter CUA32

7.6.1 Description

The Control Unit Adapter CUA32 is used to connect a Power Module blocksize to an existing DC/AC group with a higher-level control module, e.g. a CU320-2. Since the closed-loop control is realized externally, for operation, a SINAMICS, SIMOTION, or SINUMERIK closed-loop control is always required for several axes.

The CUA32 offers additional encoder interface (HTL / TTL / SSI).

The Control Unit Adapter CUA32 has the following interfaces (ports):

Table 7- 47 Interface overview of the CUA32

Type	Number
DRIVE-CLiQ interface	3
EP terminal/temperature sensor	1
Power Module Interface (PM-IF)	1
24 V electronics power supply	1
Encoder interface (HTL/TTL/SSI[(1)])	1

1 Only SSI encoders without incremental tracks can be operated on the CUA32.

7.6.2 Interface description

7.6.2.1 Overview

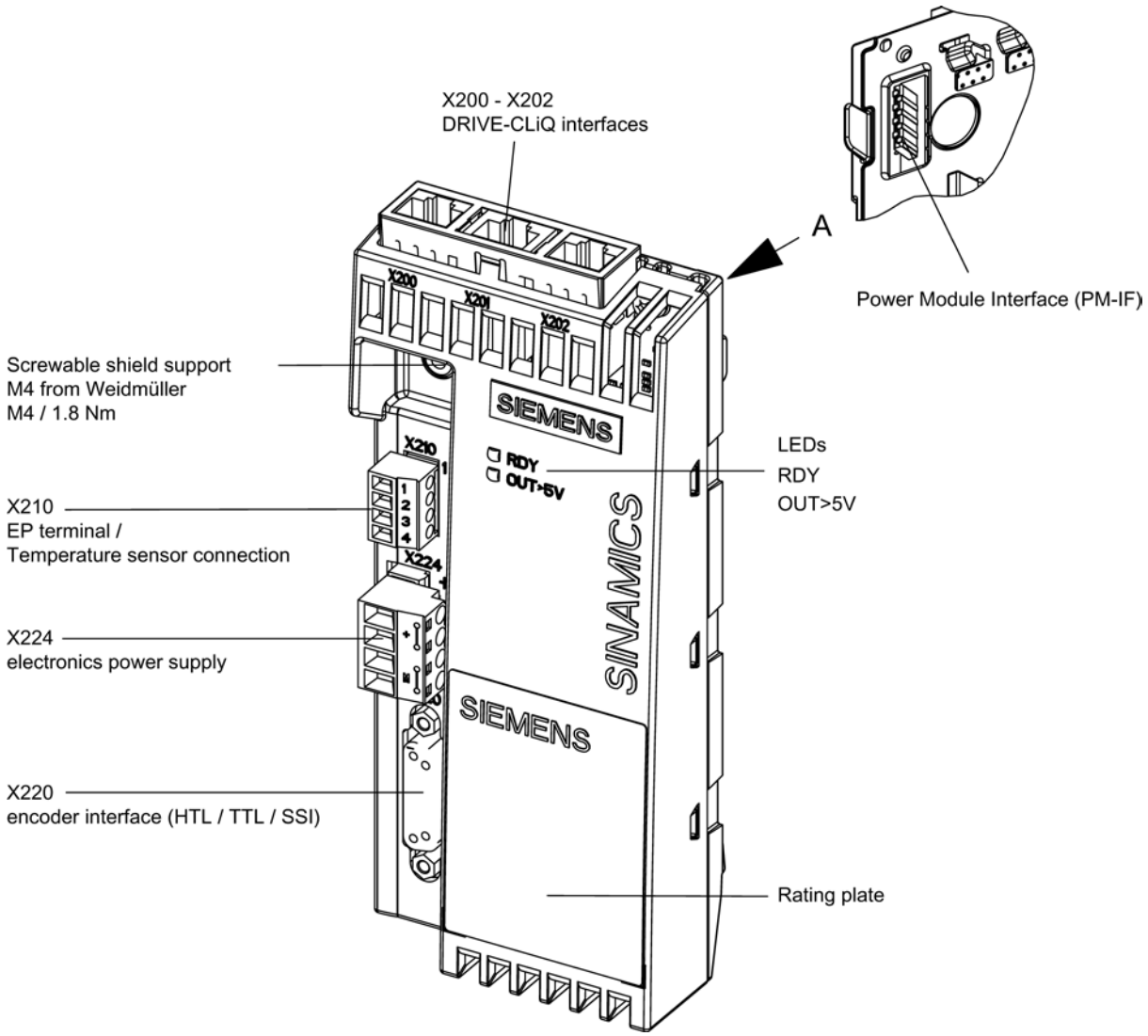

Figure 7-19 Interface overview CUA32

7.6.2.2 X200-X202 DRIVE-CLiQ interfaces

Table 7- 48 X200-X202 DRIVE-CLiQ interfaces

	Pin	Signal name	Technical data
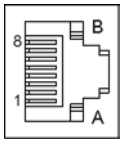	1	TXP	Transmit data +
	2	TXN	Transmit data -
	3	RXP	Receive data +
	4	Reserved, do not use	
	5	Reserved, do not use	
	6	RXN	Receive data -
	7	Reserved, do not use	
	8	Reserved, do not use	
	A	+ (24 V)	Power supply
	B	M (0 V)	Electronic ground
Connector type	DRIVE-CLiQ socket		

The blanking covers for the DRIVE-CLiQ interfaces are included in the scope of delivery.

Blanking covers (50 pieces) Order number: 6SL3066-4CA00-0AA0

7.6.2.3 X210 EP terminal / temperature sensor

Table 7- 49 X210 EP terminal / temperature sensor input

	Terminal	Function	Technical data
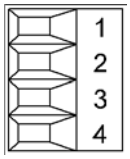	1	+ Temp [1]	Temperature sensor KTY84–1C130/PTC
	2	- Temp [1]	
	3	EP +24 V (Enable Pulses)	Supply voltage: 24 V DC (20.4 ... 28.8 V) Current consumption: 10 mA Isolated input Signal propagation delays: L → H: 100 µs H → L: 1000 µs
	4	EP M1 (Enable Pulses)	
Type: Screw-type terminal 1 (Page 437) Max. cross-section that can be connected 1.5 mm^2			

[1] Further information regarding the temperature sensor may be found in the SINAMICS S120 Commissioning Manual, Section "Temperature sensors for SINAMICS components."

Temperature sensor input

The temperature sensor is required for motors where the temperature value is not transmitted via DRIVE-CLiQ.

> **NOTICE**
>
> **Risk of motor overheating for incorrectly connected KTY temperature sensor**
>
> A KTY temperature sensor connected with incorrect polarity cannot detect if the motor overheats.
>
> - Make sure that you connect the KTY temperature sensor with the correct polarity.

The maximum length of the temperature sensor cable is 300 m. The cables must be shielded. For cable lengths >100 m, cables with a cross-section of ≥1 mm^2 must be used.

"Safe standstill" function

If the "Safe standstill" function is selected, a 24 V DC voltage must be connected to terminals 3 and 4. Upon removal, pulse inhibit is activated.

> **⚠ WARNING**
>
> **Danger to life due to electric shock in the event of voltage flashovers at the temperature sensor**
>
> Voltage flashovers in the signal electronics can occur in motors without safe electrical separation of the temperature sensors.
>
> - Use temperature sensors that fully comply with the specifications of the safety isolation.
> - If safe electrical separation cannot be guaranteed (for linear motors or third-party motors, for example), use a Sensor Module External (SME120 or SME125) or Terminal Module TM120.

7.6.2.4 X220 HTL/TTL/SSI encoder interface

Table 7- 50 X220 HTL/TTL/SSI encoder interface

	Pin	Signal name	Technical data
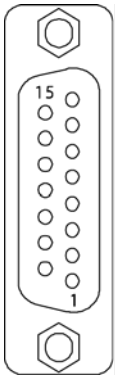	1	+Temp	KTY or PTC input
	2	SSI_CLK	SSI clock, positive
	3	SSI_XCLK	SSI clock, negative
	4	P encoder 5 V / 24 V	Encoder power supply
	5	P encoder 5 V / 24 V	Encoder power supply
	6	P sense	Sense input encoder power supply
	7	M encoder (M)	Ground, encoder power supply
	8	-Temp	Ground for KTY or PTC
	9	M sense	Ground sense input
	10	RP	R track positive
	11	RN	R track negative
	12	BN	B track negative
	13	BP	B track positive
	14	AN_SSI_XDAT	A track negative / SSI data negative
	15	AP_SSI_DAT	A track positive / SSI data positive
Connector type	15-pin sub D connector		

NOTICE

Risk of motor overheating for incorrectly connected KTY temperature sensor

A KTY temperature sensor connected with incorrect polarity cannot detect if the motor overheats.

- Make sure that you connect the KTY temperature sensor with the correct polarity.

Table 7- 51 Specification of measuring systems that can be connected

Parameter	Designation	Threshold	Min.	Type	Max.	Unit
High signal level (TTL bipolar at X220)	U_{Hdiff}		2		5	V
Low signal level (TTL bipolar at X220)	U_{Ldiff}		-5		-2	V
High signal level (HTL unipolar)	U_H	High	17		V_{CC}	V
		Low	10		V_{CC}	V
Low signal level (HTL unipolar)	U_L	High	0		7	V
		Low	0		2	V
High signal level (HTL bipolar)	U_{Hdiff}		3		V_{CC}	V
Low signal level (HTL bipolar)	U_{Ldiff}		$-V_{CC}$		-3	V
High signal level (SSI bipolar at X220)	U_{Hdiff}		2		5	V
Low signal level (SSI bipolar at X220)	U_{Ldiff}		-5		-2	V
Signal frequency	f_S		-		500	kHz
Edge clearance	t_{min}		100		-	ns
Zero pulse (with $T_s = 1/f_s$)	Length		$¼ \cdot T_s$		$¾ \cdot T_s$	
	Center of the pulse position		50	135	220	degrees

Note

We recommend that bipolar encoders are used.

When uni-polar encoders are used, the 15-pin sub D connector should be opened and the unused inverse signals (AN Pin14, BN Pin12 and RN Pin11) connected to ground (Pin7).

7.6.2.5 X224 electronics power supply

Table 7- 52 X224 electronics power supply

	Terminal	Function	Technical data
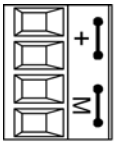	+	Electronics power supply	Voltage: 24 VDC (20.4 ... 28.8 VDC) Current consumption: max. 0.8 A (without DRIVE-CLiQ and encoder) Max. current via jumper in connector: 20 A (15 A according to UL/CSA)
	+	Electronics power supply	
	GND	Electronics ground	
	GND	Electronics ground	
Type: Screw-type terminal 2 (Page 437) Max. cross-section that can be connected: 2.5 mm²			

The maximum cable length that can be connected is 10 m.

Note

The two "+" and/or "M" terminals are jumpered in the connector. This ensures that the supply voltage is looped through.

The current consumption increases by the value for the DRIVE-CLiQ node and the encoder.

7.6.3 Connection example

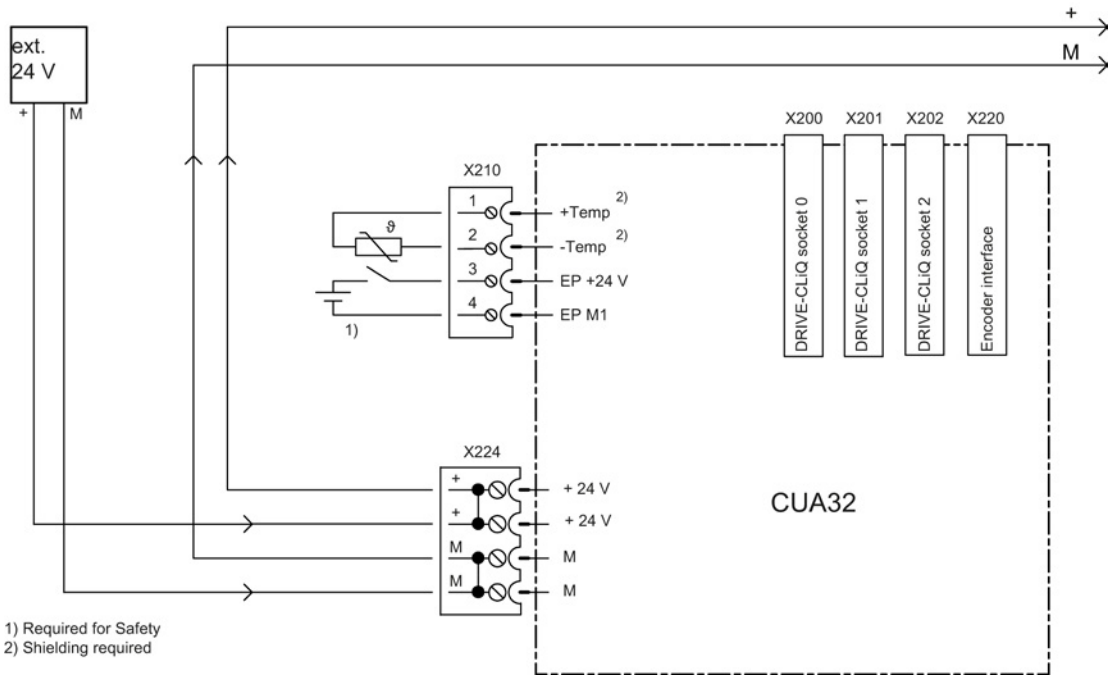

Figure 7-20 Connection example for CUA32

7.6.4 Meaning of the LEDs

Table 7- 53 Meaning of the LEDs on the Control Unit Adapter CUA32

LED	Color	Status	Description
RDY (READY)	Red	continuous light	At least one fault is present in this component.
	Green	continuous light	The component is ready for operation and cyclic DRIVE-CLiQ communication is taking place.
OUT > 5V	-	Off	Electronics power supply is missing or outside permissible tolerance range. Power supply: ≤5 V.
	Orange	continuous light	Electronics power supply for measuring system available. Power supply: >5 V. **Caution** You must ensure that the connected encoder can be operated with a 24 V power supply. If an encoder that is designed for a 5 V power supply is operated with a 24 V power supply, this can destroy the encoder electronics.

Cause and rectification of faults

Information about the cause and rectification of faults can be found in the SINAMICS S120 Commissioning Manual.

7.6.5 Dimension drawing

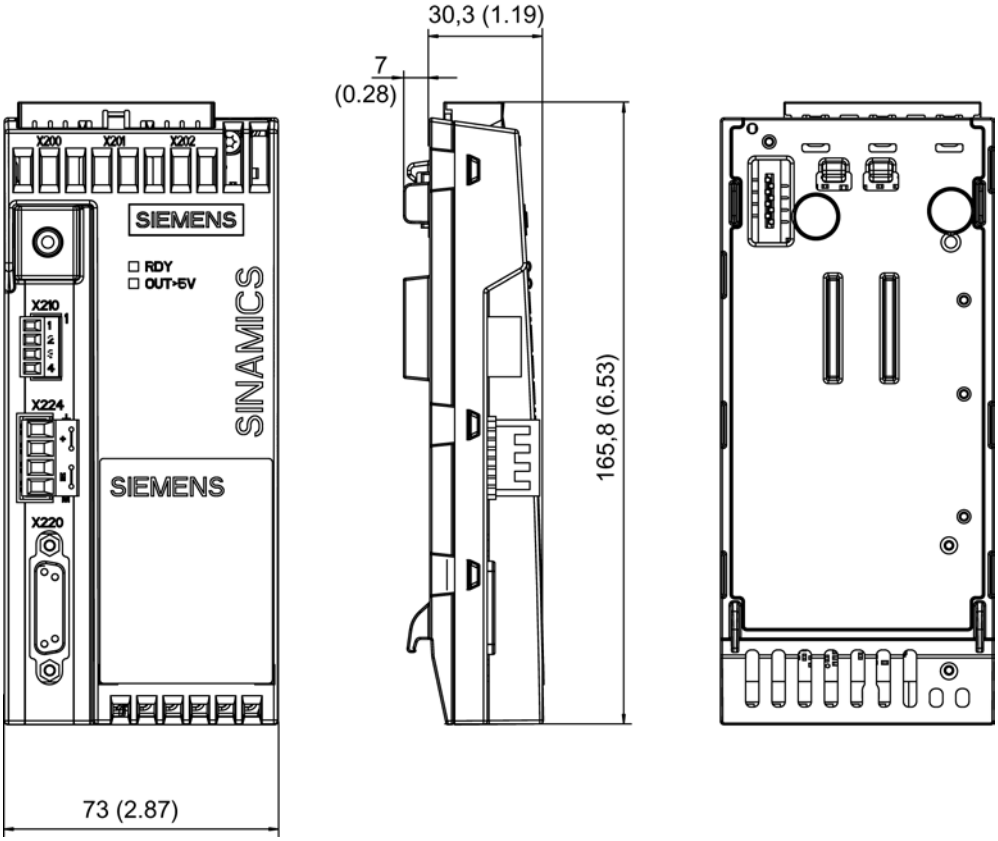

Figure 7-21 Dimension drawing of Control Unit Adapter CUA32, all data in mm and (inches)

7.6.6 Technical data

Table 7- 54 Technical data CUA32

6SL3040-0PA01-0AA0	Unit	Value
Electronics power supply		
Voltage	V_{DC}	24 DC (20.4 ... 28.8)
Current (without DRIVE-CLiQ and encoder)	A_{DC}	0.11
Maximum current consumption of encoder	mA	400
Power loss	W	2.6
Maximum DRIVE-CLiQ cable length	m	100
Weight	kg	0,32

7.7 Mounting Control Units and Control Unit Adapters

Power Modules Blocksize

Control Unit (CU310-2 PN / DP) and Control Unit Adapter (CUA31 / CUA32) can be mounted onto Power Modules Blocksize of any size. Communication between the devices is realized via the PM-IF interface.

Mounting

1. Mount the Control Unit / the Control Unit Adapter on the PM.
2. Press the Control Unit / the Control Unit Adapter back until it latches into the blue interlocking lug.

The diagrams show the Control Unit / Control Unit Adapter mounted on the PM340 (frame size FSD), using the CU310-2 PN as an example.

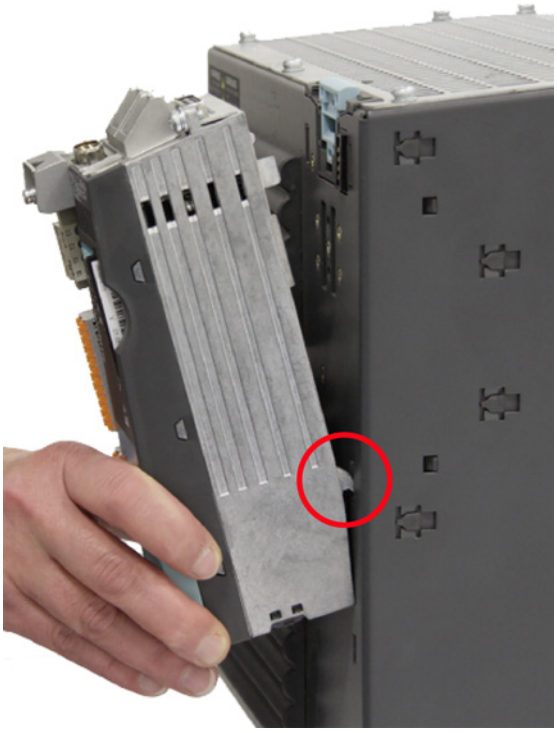	
Placing the CU310-2 PN on the PM340	PM340 with CU310-2 PN fitted

Removal

1. Press the blue locking latch downwards (see arrow).
2. Remove the Control Unit / Control Unit Adapter towards the front.

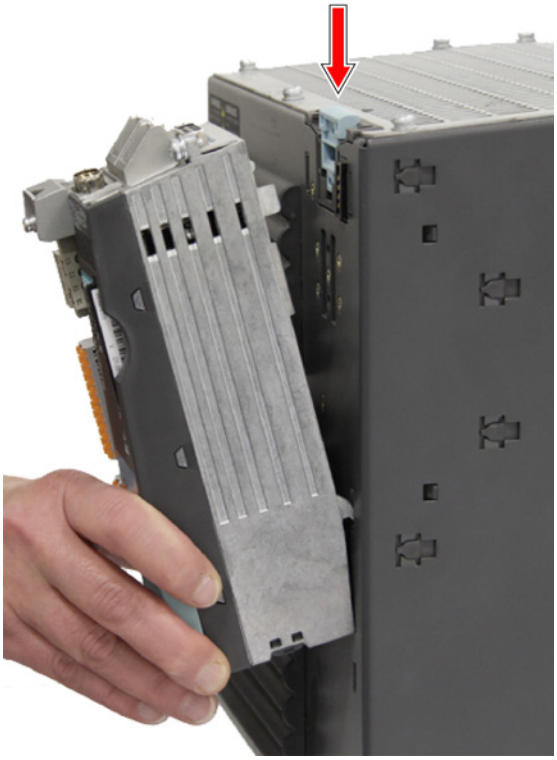

Figure 7-22 Removing the CU310-2 PN from the PM340

Power Module Chassis

1. Connect the DRIVE-CLiQ interfaces of Power Module Chassis and the Control Unit / Control Unit Adapter.
   The DRIVE-CLiQ interface of the Power Module Chassis is located behind the mounting plate.
2. Mount the Control Unit / Control Unit Adapter on the mounting plate.

7.8 Basic Operator Panel BOP20

7.8.1 Description

The Basic Operator Panel BOP20 is a basic operator panel with six keys and a backlit display unit. The BOP20 can be inserted on the CU310-2 DP and CU310-2 PN SINAMICS Control Units and operated.

The BOP20 supports the following functions:

- Input of parameters and activation of functions
- Display of operating modes, parameters, alarms and faults

7.8.2 Interface description

Figure 7-23 Basic Operator Panel BOP20

Overview of displays and keys

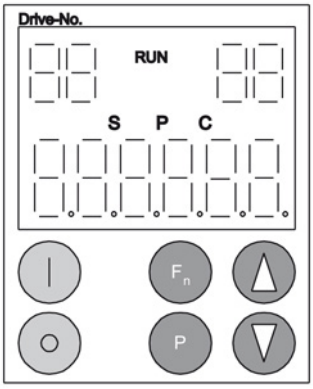

Figure 7-24 Overview of displays and keys

Table 7- 55 Displays

Display	Meaning
Top left 2 positions	The active drive object of the BOP is displayed here. The displays and key operations always refer to this drive object.
RUN	Is lit (bright) if the displayed drive is in the RUN state (in operation).
Top right 2 positions	The following is displayed in this field: • More than 6 digits: Characters that are present but cannot be seen (e.g. "r2" → 2 characters to the right are invisible, "L1" → 1 character to the left is invisible) • Faults: Selects/displays other drives with faults • Designation of BICO inputs (bi, ci) • Designation of BICO outputs (bo, co) Source object of a BICO interconnection to a drive object other than the active one.
S	Is (bright) if at least one parameter was changed and the value was not transferred into the non-volatile memory.
P	Is lit (bright) if, for a parameter, the value only becomes effective after pressing the P key.
C	Is light (bright) if at least one parameter was changed and the calculation for consistent data management has still not been initiated.
Below, 6 position	Displays, e.g. parameters, indices, faults and alarms.

BOP20 keyboard

Table 7- 56 Assignment of the BOP20 keyboard

Key	Name	Meaning
	ON	Powering-up the drives for which the command "ON/OFF1", "OFF2" or "OFF3" should come from the BOP.
	OFF	Power-down the drives for which the "ON/OFF1," "OFF2," or "OFF3" commands should come from the BOP.
		Note: The effectiveness of these keys can be defined using the appropriate BICO parameterization (e.g. using these keys, it is possible to simultaneously control all of the axes that have been configured.) The structure of the BOP control word corresponds to the structure of the PROFIBUS control word.
FN	Functions	The meaning of these keys depends on the actual display. **Note:** The effectiveness of this key to acknowledge faults can be defined using the appropriate BICO parameterization.
P	Parameter	The meaning of these keys depends on the actual display.
	Raise	The keys are dependent on the actual display and are used to raise or lower values.
	Lower	

7.8.3 Mounting

NOTICE
Damage when using the BOP The interface for the BOP20 on the CU310-2 may be damaged when the BOP20 is used. • Make sure that you insert and withdraw the BOP20 straight into/out of the CU310-2 and that it is not tilted up or down.

Mounting

The diagrams show how to mount the Basic Operator Panel BOP20 on a CU310-2.

1.	To remove the blanking cover, press the latching cams of the cover together simultaneously and pull the cover straight out.	2.	Press the latching cams on the BOP20 together simultaneously and push the BOP20 straight into the housing of the CU310-2 until you hear it latch into position.	CU310-2 with mounted BOP20.

Note

The BOP20 may be inserted or withdrawn while the Control Unit is operational.

Removal

1. Simultaneously press the latching cams on the BOP20.
2. Keep the latching cams pressed together and pull the BOP20 straight out.
3. Insert the blanking cover.

Display and operator controls of the BOP20

For information about display and operator controls of the BOP20, refer the SINAMICS S120 Commissioning Manual.

Supplementary system components and encoder system integration 8

8.1 Sensor Modules

8.1.1 Safety instructions for Sensor Modules Cabinet-Mounted

⚠ WARNING

Danger to life if the fundamental safety instructions and residual risks are not observed

The non-observance of the fundamental safety instructions and residual risks stated in Chapter 1 can result in accidents with severe injuries or death.

- Observe the fundamental safety instructions.
- Consider the residual risks for the risk evaluation.

⚠ WARNING

Danger to life due to electric shock when disconnecting and connecting encoder cables during operation

When opening plug connections in operation, arcs can result in severe injury or death.

- Disconnect or connect the encoder cables to Siemens motors, which are not expressly released for connecting and disconnecting during operation, in a deenergized condition only. When using direct measuring systems (third-party encoders), ask the manufacturer whether it is permissible to disconnect/connect under voltage.

NOTICE

Damage when connecting an impermissible number of encoder systems

If more than the maximum permissible number of encoder systems are connected to a Sensor Module, this will cause damage.

- Only connect one encoder system per Sensor Module.

NOTICE

Damage caused by the use of incorrect DRIVE-CLiQ cables

Damage or malfunctions can occur on the devices or system when DRIVE-CLiQ cables are used that are either incorrect or have not been approved for this purpose.

- Only use suitable DRIVE-CLiQ cables that have been approved by Siemens for the particular application.

Note

Diminished level of interference immunity due to equalizing currents via the electronics ground

Ensure that there is no electrical connection between the encoder system housing and the signal cables, or the encoder system electronics. If this is not carefully observed, the system may not be able to reach the required interference immunity level. (There is then a danger of equalization currents flowing through the electronics ground.)

Note

Function equipotential bonding for distributed DRIVE-CLiQ nodes

Integrate all of the components that are connected via DRIVE-CLiQ into the function equipotential bonding concept. The connection should be preferably established by mounting on metallic bare machine and plant components that are connected with one another using an equipotential bonding conductor.
Alternatively, you can establish equipotential bonding using a conductor (min. 6 mm²), which as far as possible, is routed in parallel to the DRIVE-CLiQ cable. This involves all distributed DRIVE-CLiQ nodes, for example SMCx.

Note

Functional faults caused by dirty DRIVE-CLiQ interfaces

Malfunctions can occur in the system through the use of polluted DRIVE-CLiQ interfaces.

- Close any unused DRIVE-CLiQ interfaces with the supplied cover plates.

8.1.2 Sensor Module Cabinet-Mounted SMC10

8.1.2.1 Description

The Sensor Module Cabinet-Mounted SMC10 evaluates encoder signals and transmits the speed, actual position value, rotor position and, if necessary, the motor temperature via DRIVE-CLiQ to the Control Unit.

The SMC10 is used to evaluate sensor signals from resolvers.

8.1.2.2 Interface description

Overview

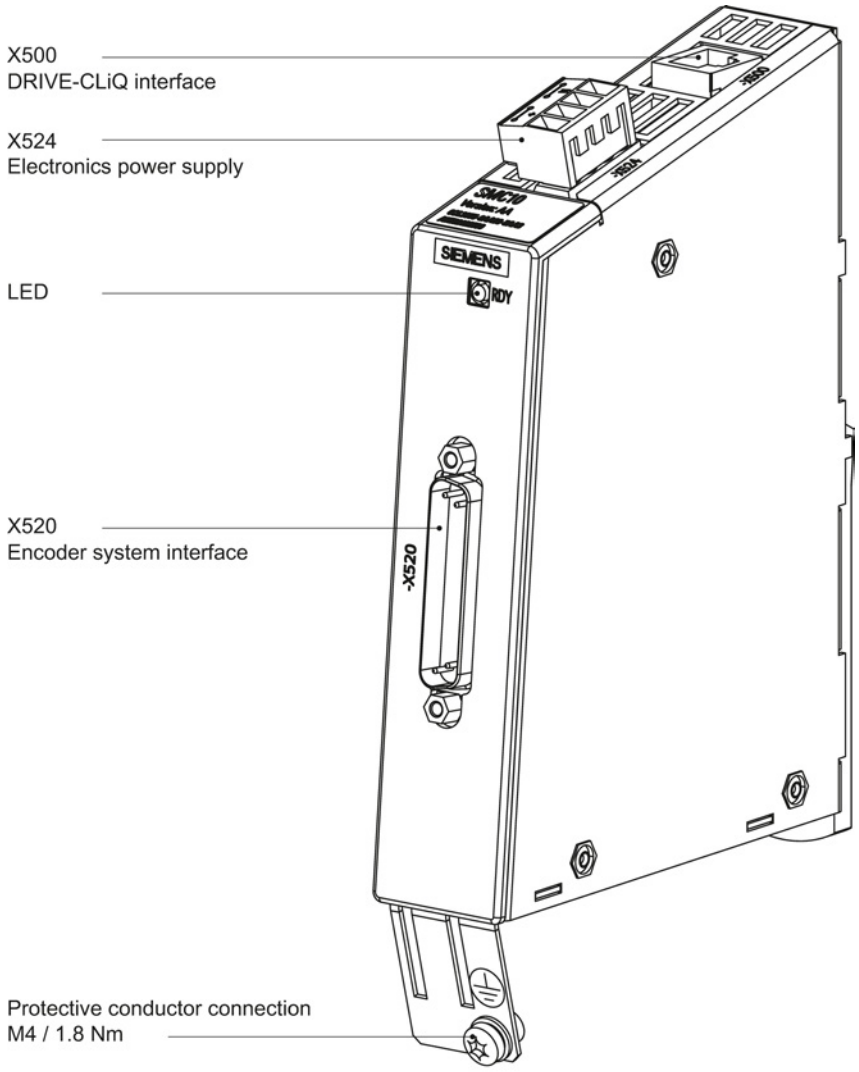

Figure 8-1 Interface overview for the SMC10

X500 DRIVE-CLiQ interface

Table 8- 1 X500: DRIVE-CLiQ interface

	Pin	Signal name	Technical data
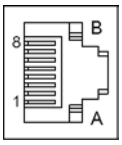	1	TXP	Transmit data +
	2	TXN	Transmit data -
	3	RXP	Receive data +
	4	Reserved, do not use	
	5	Reserved, do not use	
	6	RXN	Receive data -
	7	Reserved, do not use	
	8	Reserved, do not use	
	A	Reserved, do not use	
	B	M (0 V)	Electronics ground
Connector type	DRIVE-CLiQ socket		

The blanking cover for the DRIVE-CLiQ port is included in the scope of delivery.

Blanking covers (50 x) Order number: 6SL3066-4CA00-0AA0

X520 encoder system interface

Table 8- 2 X520: Encoder system interface

	Pin	Signal name	Technical data
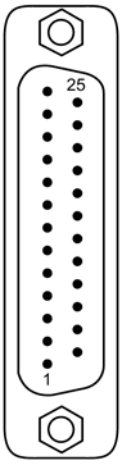	1	Reserved, do not use	
	2	Reserved, do not use	
	3	S2	Resolver signal A (sin+)
	4	S4	Inverted resolver signal A (sin-)
	5	Ground	Ground (for internal shield)
	6	S1	Resolver signal B (cos+)
	7	S3	Inverted resolver signal B (cos-)
	8	Ground	Ground (for internal shield)
	9	R1	Resolver excitation positive
	10	Reserved, do not use	
	11	R2	Resolver excitation negative
	12	Reserved, do not use	
	13	+ Temp[1)]	Motor temperature sensing KTY84-1C130 (KTY+) Temperature sensor KTY84-1C130 / PTC
	14	Reserved, do not use	
	15	Reserved, do not use	
	16	Reserved, do not use	
	17	Reserved, do not use	
	18	Reserved, do not use	
	19	Reserved, do not use	
	20	Reserved, do not use	
	21	Reserved, do not use	
	22	Reserved, do not use	
	23	Reserved, do not use	
	24	Ground	Ground (for internal shield)
	25	- Temp [1)]	Motor temperature sensing KTY84-1C130 (KTY-) Temperature sensor KTY84-1C130 / PTC
Connector type:	25-pin SUB D connector		
Measuring current via temperature sensor connection: 2 mA			

[1)] Accuracy of temperature measurement:
- KTY: ±7°C (including evaluation)
- PTC: ±5°C (including evaluation)

NOTICE

Damage to motor in the event of incorrectly connected KTY temperature sensor

A KTY temperature sensor connected with incorrect polarity cannot detect if the motor overheats. Overheating can cause damage to the motor.

- Connect a KTY temperature sensor with the correct polarity.

⚠ WARNING

Danger to life due to electric shock in the event of voltage flashovers at the temperature sensor

Voltage flashovers in the signal electronics can occur in motors without safe electrical separation of the temperature sensors.

- Use temperature sensors that fully comply with the specifications of the safety isolation.
- If safe electrical separation cannot be guaranteed (for linear motors or third-party motors, for example), use a Sensor Module External (SME120 or SME125) or Terminal Module TM120.

X524 Electronics power supply

Table 8- 3 X524: Electronics power supply

	Terminal	Function	Technical data
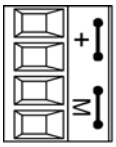	+	Electronics power supply	Voltage: 24 V (20.4 … 28.8 V) Current consumption: max. 0.35 A Max. current via jumper in connector: 20 A (15 A according to UL/CSA)
	+	Electronics power supply	
	M	Electronics ground	
	M	Electronics ground	
Type: Screw terminal 2 (Page 437) Max. cross-section that can be connected: 2.5 mm²			

The maximum cable length that can be connected is 10 m.

Note

The two "+" or "M" terminals are jumpered in the connector. This ensures that the supply voltage is looped through.

8.1.2.3 Meaning of the LEDs

Table 8- 4 Meaning of the LED on the Sensor Module Cabinet-Mounted SMC10

LED	Color	Status	Description, cause	Remedy
RDY READY	-	Off	The electronics power supply is missing or outside the permissible tolerance range.	–
	Green	Continuous light	The component is ready for operation. Cyclic DRIVE-CLiQ communication is taking place.	–
	Orange	Continuous light	DRIVE-CLiQ communication is being established.	–
	Red	Continuous light	This component has at least one fault. Note: The LED is activated regardless of whether the corresponding messages have been reconfigured.	Remove and acknowledge the fault.
	Green/red	Flashing light 0.5 Hz	Firmware is being downloaded.	–
		Flashing light 2 Hz	Firmware download is complete. The system waits for POWER ON.	Carry out a POWER ON.
	Green/orange or Red/orange	Flashing light	Component recognition via LED is activated[1]. Note: Both options depend on the LED status when component recognition is activated.	–

[1] See SINAMICS S120/S150 List Manual for the parameters to activate the recognition of components via LED

Cause and rectification of faults

The following documents contain information about the cause of faults and how they can be rectified:

SINAMICS S120 Commissioning Manual (IH1)

SINAMICS S120/S150 List Manual (LH1)

8.1.2.4 Dimension drawing

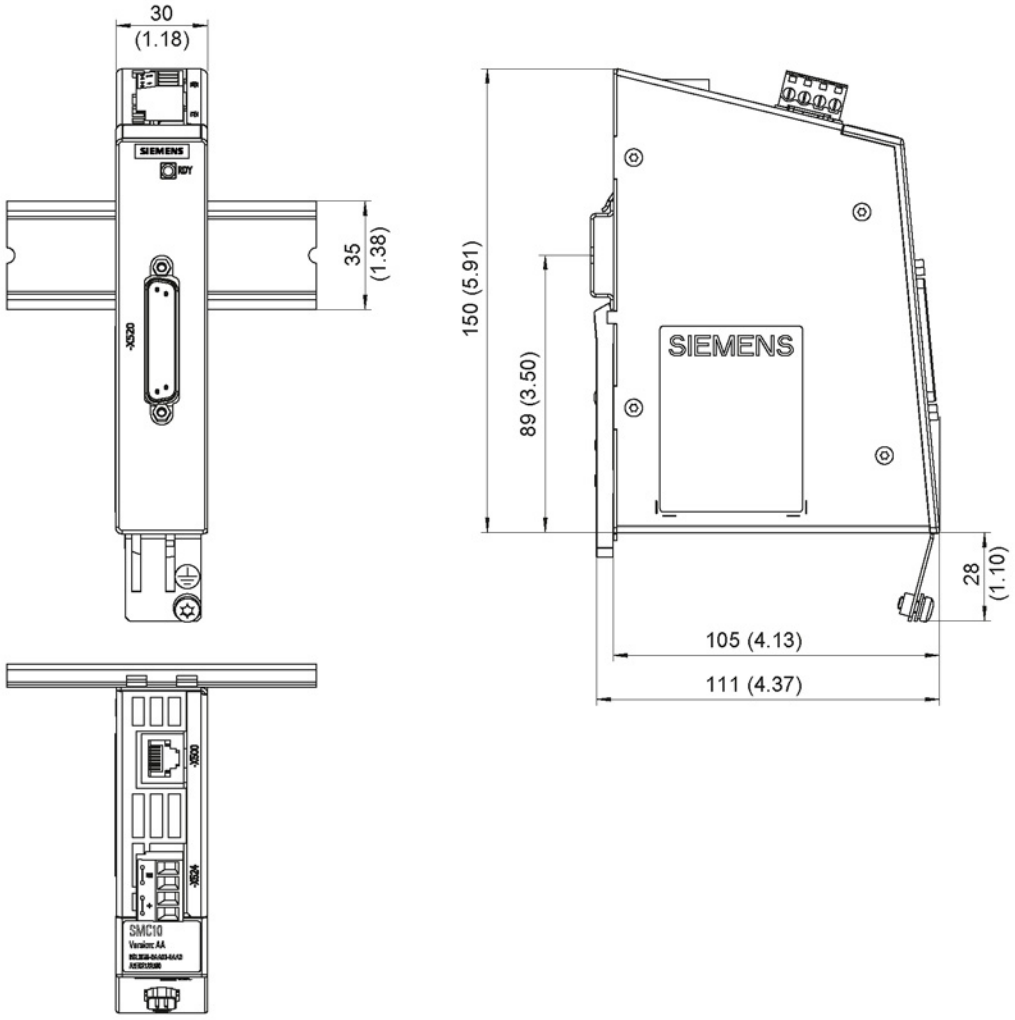

Figure 8-2 Dimension drawing of the Sensor Module Cabinet SMC10, all dimensions in mm and (inches)

8.1.2.5 Mounting

Installation

1. Tilt the component backwards slightly and attach it to the DIN rail using the hooks.
2. Swivel the component onto the DIN rail until you hear the mounting slide at the rear latch into position.
3. Slide the components along the mounting rail to either the left or right up to their final position.

Removal

1. First shift the mounting slide downwards at the lug to release the interlocking with the mounting rail.
2. Swivel the component to the front and withdraw it upwards from the DIN rail.

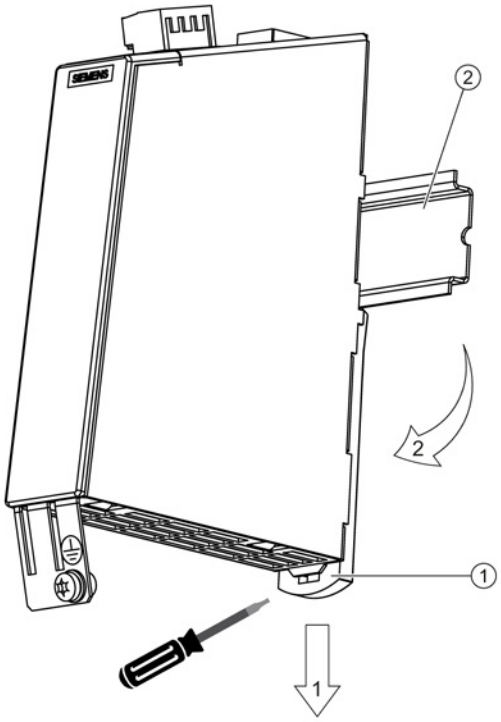

① Mounting slide
② Mounting rail

Figure 8-3 Removing from a DIN mounting rail

8.1.2.6 Technical data

Table 8- 5 Technical data

6SL3055-0AA00-5AAx	Unit	Value
Electronics power supply Voltage Current (without encoder system) Current (with encoder system) Power loss	 V_{DC} A_{DC} A_{DC} W	 24 (20,4 … 28,8) ≤ 0,20 ≤ 0,35 ≤ 10
Specification Transformation ratio of the resolver (ü) Excitation voltage on the SMC10 when ü=0.5 Amplitude monitoring threshold (secondary tracks) of the SMC10	 V_{rms} V_{rms}	 0,5 4,1 1
Excitation voltage (cannot be parameterized)	V_{rms}	4,1
Excitation frequency (synchronized to the current controller clock cycle)	kHz	5 to 16
PE/ground connection	At the housing with M4/1.8 Nm screw	
Max. encoder cable length	m	130
Weight	kg	0,45
Degree of protection		IP20 or IPXXB

Table 8- 6 Max. frequency that can be evaluated (speed)

Resolver		Max. speed resolver / motor		
Number of poles	Number of pole pairs	8 kHz/125 µsec	4 kHz/250 µsec	2 kHz/500 µsec
2-pole	1	120000 rpm	60000 rpm	30000 rpm
4-pole	2	60000 rpm	30000 rpm	15000 rpm
6-pole	3	40000 rpm	20000 rpm	10000 rpm
8-pole	4	30000 rpm	15000 rpm	7500 rpm

The ratio between the ohmic resistance R and the inductance L (the primary winding of the resolver) determines whether the resolver can be evaluated with the SMC10. See the following diagram:

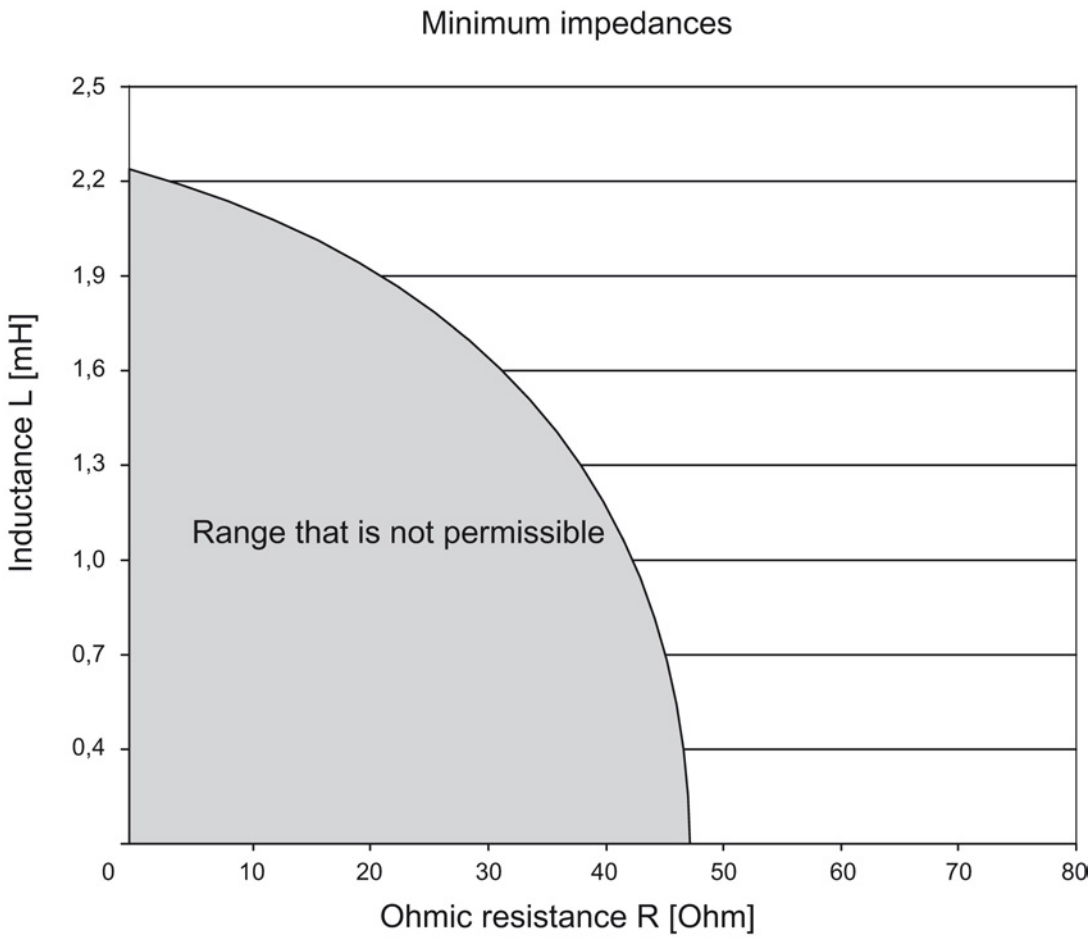

Figure 8-4 Connectable impedances with an excitation frequency f = 5000 Hz

8.1.3 Sensor Module Cabinet-Mounted SMC20

8.1.3.1 Description

The Sensor Module Cabinet-Mounted SMC20 evaluates encoder signals and transmits the speed, actual position value, rotor position and, if necessary, the motor temperature and reference point via DRIVE-CLiQ to the Control Unit.

The SMC20 is used to evaluate encoder signals from incremental encoders with SIN/COS (1 Vpp) or absolute encoders with EnDat 2.1. EnDat 2.2 order designation 02 or SSI.

8.1.3.2 Interface description

Overview

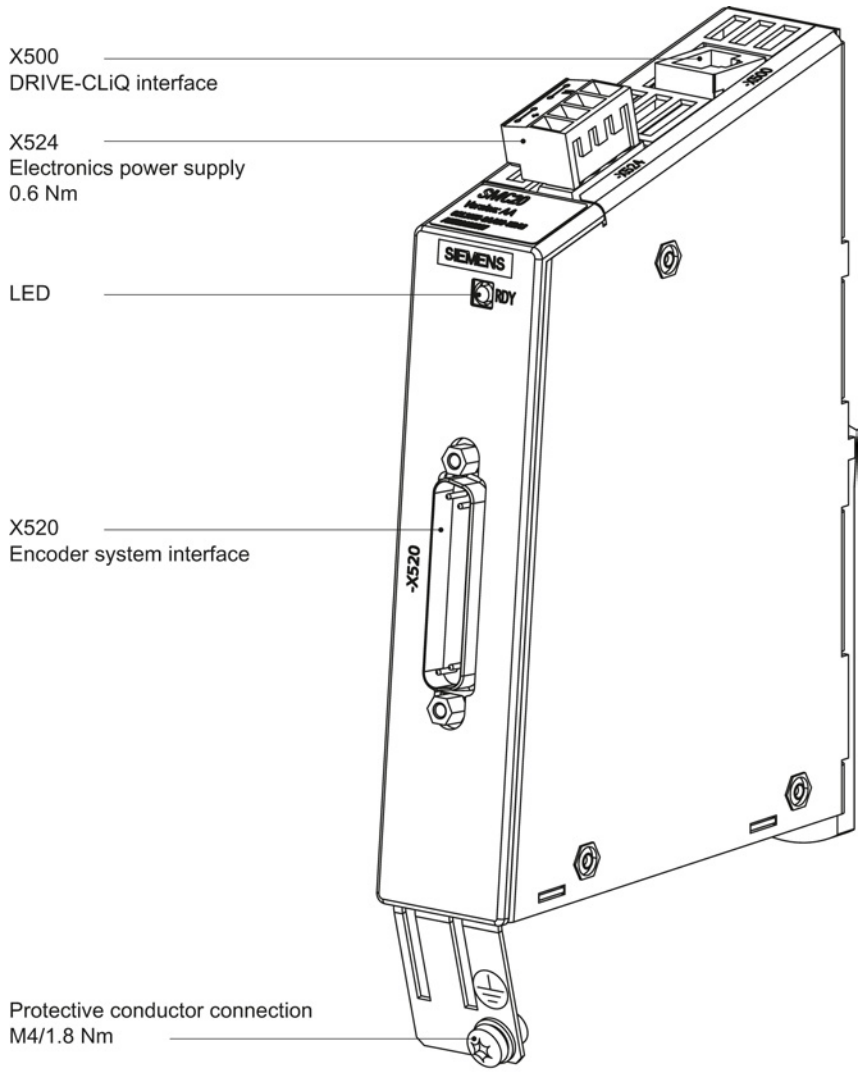

Figure 8-5 Interface description of the SMC20

X500 DRIVE-CLiQ interface

Table 8- 7 X500: DRIVE-CLiQ interface

	Pin	Signal name	Technical data
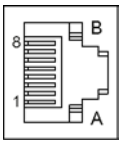	1	TXP	Transmit data +
	2	TXN	Transmit data -
	3	RXP	Receive data +
	4	Reserved, do not use	
	5	Reserved, do not use	
	6	RXN	Receive data -
	7	Reserved, do not use	
	8	Reserved, do not use	
	A	Reserved, do not use	
	B	M (0 V)	Electronics ground
Connector type	DRIVE-CLiQ socket		

The blanking cover for the DRIVE-CLiQ port is included in the scope of delivery.

Blanking covers (50 x) Order number: 6SL3066-4CA00-0AA0

X520 encoder system interface

Table 8- 8 X520: Encoder system interface

	Pin	Signal name	Technical data
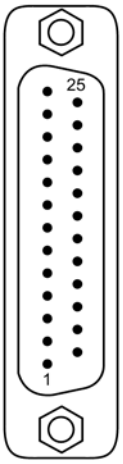	1	P encoder	Encoder power supply
	2	M encoder	Ground for encoder power supply
	3	A	Incremental signal A
	4	A*	Inverse incremental signal A
	5	Ground	Ground (for internal shield)
	6	B	Incremental signal B
	7	B*	Inverse incremental signal B
	8	Ground	Ground (for internal shield)
	9	Reserved, do not use	
	10	Clock	Clock, EnDat interface, SSI clock
	11	Reserved, do not use	
	12	Clock*	Inverted clock, EnDat interface, inverted SSI clock
	13	+Temp[1)]	Motor temperature sensing KTY84-1C130 (KTY+) Temperature sensor KTY84-1C130 / PTC
	14	P sense	Sense input of encoder power supply
	15	Data	Data, EnDat interface, SSI data
	16	M sense	Ground sense input encoder power supply
	17	R	Reference signal R
	18	R*	Inverse reference signal R
	19	C	Absolute track signal C
	20	C*	Inverse absolute track signal C
	21	D	Absolute track signal D
	22	D*	Inverse absolute track signal D
	23	Data*	Inverse data, EnDat interface, Inverse SSI data
	24	Ground	Ground (for internal shield)
	25	-Temp[1)]	Motor temperature sensing KTY84-1C130 (KTY-) Temperature sensor KTY84-1C130 / PTC
Connector type:	25-pin SUB D connector		
Measuring current via temperature sensor connection: 2 mA			

[1)] Accuracy of the temperature measurement:
- KTY: ±7°C (including evaluation)
- PTC: ±5°C (including evaluation)

NOTICE

Damage to motor in the event of incorrectly connected KTY temperature sensor

A KTY temperature sensor connected with incorrect polarity cannot detect if the motor overheats. Overheating can cause damage to the motor.

- Connect a KTY temperature sensor with the correct polarity.

⚠ WARNING

Danger to life due to electric shock in the event of voltage flashovers at the temperature sensor

Voltage flashovers in the signal electronics can occur in motors without safe electrical separation of the temperature sensors.

- Use temperature sensors that fully comply with the specifications of the safety isolation.
- If safe electrical separation cannot be guaranteed (for linear motors or third-party motors, for example), use a Sensor Module External (SME120 or SME125) or Terminal Module TM120.

X524 electronics power supply

Table 8- 9 X524 electronics power supply

	Terminal	Function	Technical data
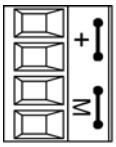	+	Electronics power supply	Voltage: 24 V (20.4 … 28.8 V) Current consumption: max. 0.35 A Maximum current via jumper in connector: 20 A (15 A according to UL/CSA)
	+	Electronics power supply	
	GND	Electronics ground	
	GND	Electronics ground	
Type: Screw-type terminal 2 (Page 437) Max. cross-section that can be connected: 2.5 mm²			

The maximum cable length that can be connected is 10 m.

Note

The two "+" and/or "M" terminals are jumpered in the connector. This ensures that the supply voltage is looped through.

8.1.3.3 Meaning of the LEDs

Table 8- 10 Meaning of the LED on the Sensor Module Cabinet-Mounted SMC20

LED	Color	Status	Description, cause	Remedy
RDY READY	-	Off	The electronics power supply is missing or outside the permissible tolerance range.	–
	Green	Continuous light	The component is ready for operation. Cyclic DRIVE-CLiQ communication is taking place.	–
	Orange	Continuous light	DRIVE-CLiQ communication is being established.	–
	Red	Continuous light	This component has at least one fault. Note: The LED is activated irrespective of whether the corresponding messages have been reconfigured.	Remove and acknowledge the fault.
	Green / Red	0.5 Hz flashing light	Firmware is being downloaded.	–
		2 Hz flashing light	Firmware download is complete. The system waits for POWER ON.	Carry out a POWER ON.
	Green / Orange or Red / Orange	Flashing light	Component recognition via LED is activated[1]. Note: Both options depend on the LED status when component recognition is activated.	–

[1] See SINAMICS S120/S150 List Manual for the parameters to activate the recognition of components via LED

Cause and rectification of faults

The following documents contain information about the cause of faults and how they can be rectified:

SINAMICS S120 Commissioning Manual (IH1)

SINAMICS S120/S150 List Manual (LH1)

8.1.3.4 Dimension drawing

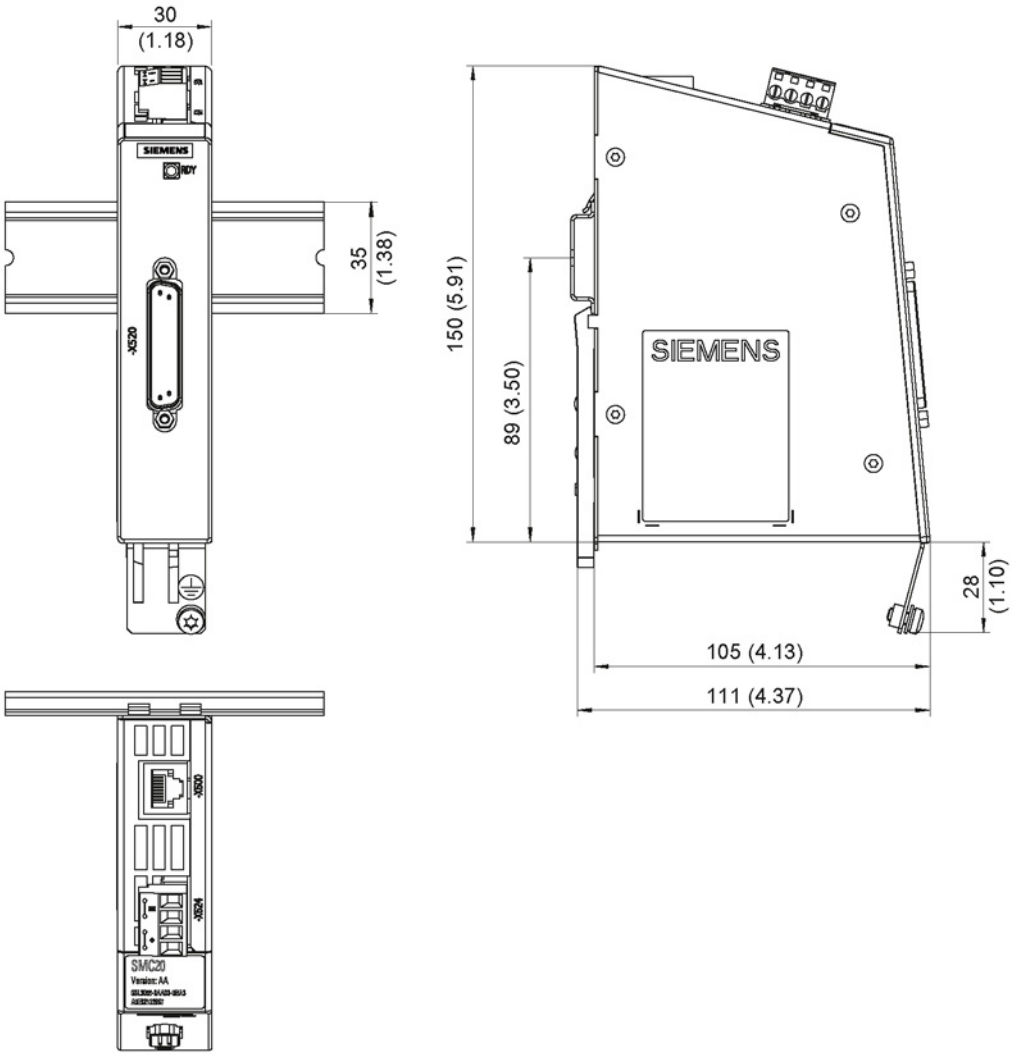

Figure 8-6 Dimension drawing of the Sensor Module Cabinet SMC20, all data in mm and (inches)

8.1.3.5 Mounting

Installation

1. Tilt the component backwards slightly and attach it to the DIN rail using the hooks.
2. Swivel the component onto the DIN rail until you hear the mounting slide at the rear latch into position.
3. Slide the components along the mounting rail to either the left or right up to their final position.

Removal

1. First shift the mounting slide downwards at the lug to release the interlocking with the mounting rail.
2. Swivel the component to the front and withdraw it upwards from the DIN rail.

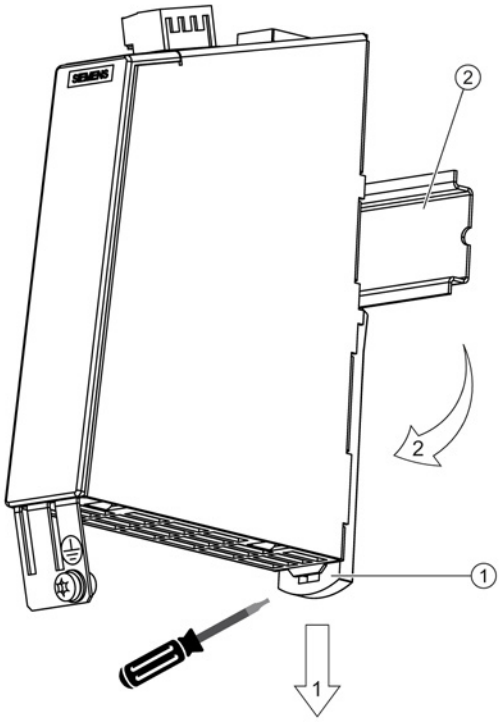

① Mounting slide
② Mounting rail

Figure 8-7 Removing from a DIN mounting rail

8.1.3.6 Technical data

Table 8- 11 Technical data

6SL3055-0AA00-5BAx	Unit	Value
Electronics power supply Voltage Current (without encoder system) Current (with encoder system) Power loss	 V_{DC} A_{DC} A_{DC} W	 24 (20,4 … 28,8) ≤ 0,20 ≤ 0,35 ≤ 10
Encoder system power supply Voltage Current	 V_{DC} A_{DC}	 5 V DC (with remote sense) [1] 0.35
Encoder frequency that can be evaluated ($f_{encoder}$)	kHz	≤ 500
SSI baud rate [2]	kBd	100 - 1000[3]
Max. encoder cable length	m	100
PE/ground connection		At the housing with M4/1.8 Nm screw
Weight	kg	0,45
Degree of protection		IP20 or IPXXB

[1] A controller compares the encoder system supply voltage - sensed via the Remote Sense cables - with the reference supply voltage of the encoder system, and adjusts the supply voltage for the encoder system at the output of the sensor module until the required supply voltage is obtained directly at the encoder system (only for 5 V encoder system power supply).

[2] Only possible for SSI encoders with 5 V supply.

[3] See the diagram "Maximum cable length depending on the SSI baud rate for SSI encoders"

Note

Current controller clock cycle

For a current controller clock cycle of 31.25 µs, use an SMC20 with order number 6SL3055-0AA00-5BA3.

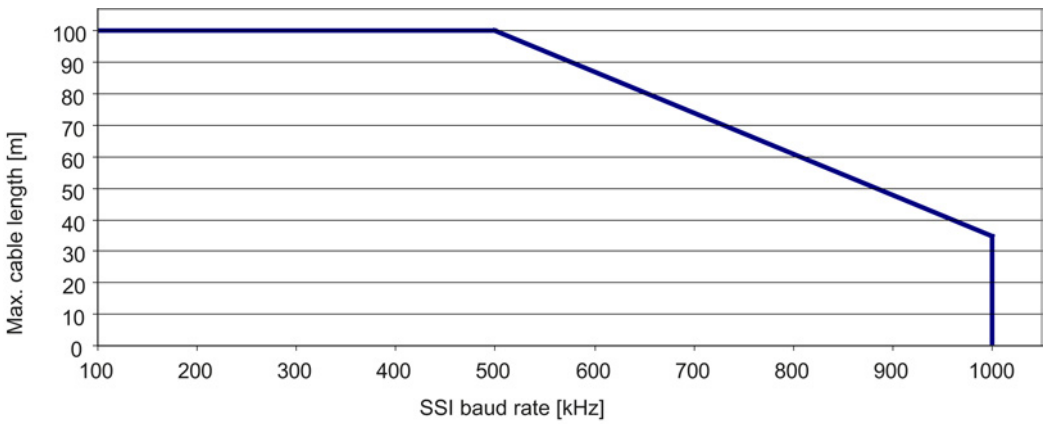

Figure 8-8 Maximum cable lengths depending on the SSI baud rate for SSI encoders

8.1.4 Sensor Module Cabinet-Mounted SMC30

8.1.4.1 Description

The Sensor Module Cabinet-Mounted SMC30 evaluates encoder signals and transmits the speed, actual position value and, if necessary, the motor temperature and reference point via DRIVE-CLiQ to the Control Unit.

The SMC30 is used to evaluate encoder signals from encoders with TTL, HTL, or SSI interfaces.

A combination of TTL/HTL signal and SSI absolute signal is possible at terminals X521/X531, if both signals are derived from the same measured variable.

8.1.4.2 Interface description

Overview

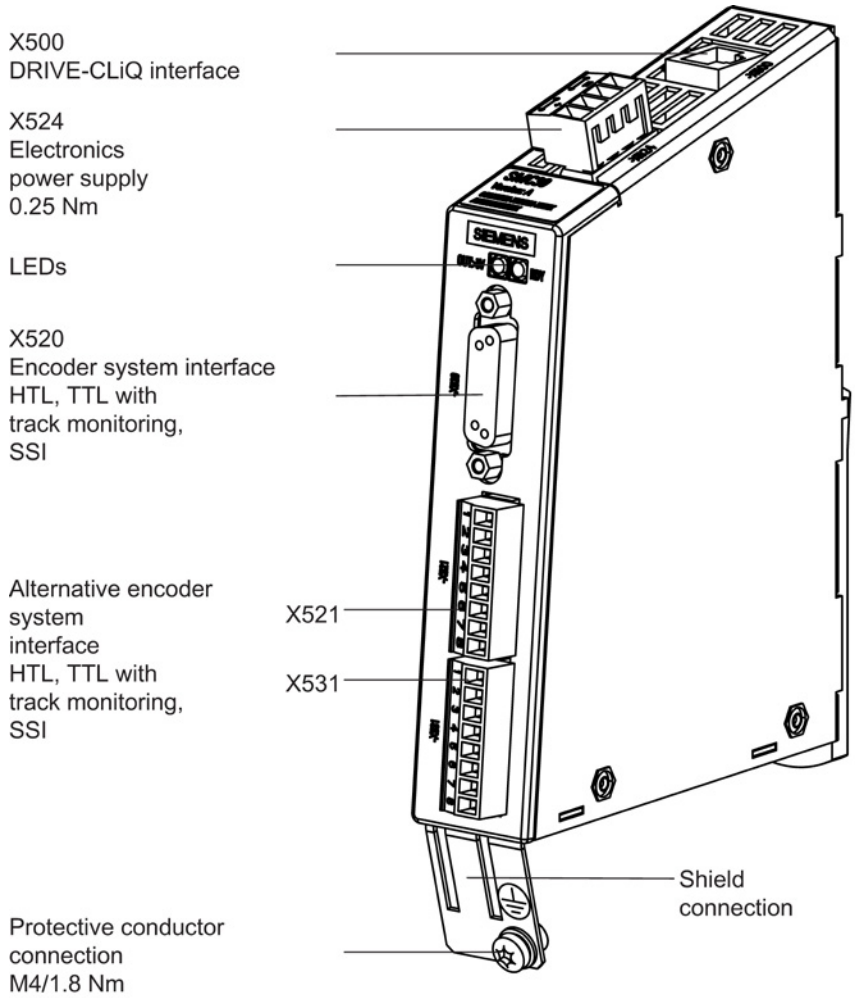

Figure 8-9 Interface description of the SMC30

X500 DRIVE-CLiQ interface

Table 8- 12 X500: DRIVE-CLiQ interface

	Pin	Signal name	Technical data
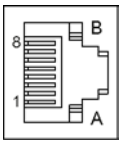	1	TXP	Transmit data +
	2	TXN	Transmit data -
	3	RXP	Receive data +
	4	Reserved, do not use	
	5	Reserved, do not use	
	6	RXN	Receive data -
	7	Reserved, do not use	
	8	Reserved, do not use	
	A	Reserved, do not use	
	B	M (0 V)	Electronics ground
Connector type	DRIVE-CLiQ socket		

The blanking cover for the DRIVE-CLiQ port is included in the scope of delivery.

Blanking covers (50 x) Order number: 6SL3066-4CA00-0AA0

X520 encoder system interface

Table 8- 13 X520: Encoder system interface

	Pin	Signal name	Technical data
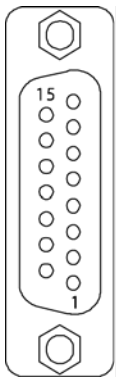	1	+ Temp [1]	Motor temperature sensing KTY84-1C130 (KTY+) Temperature sensor KTY84-1C130 / PTC
	2	Clock	SSI clock
	3	Clock*	Inverse SSI clock
	4	P encoder 5 V / 24 V	Encoder power supply
	5	P encoder 5 V / 24 V	
	6	P sense	Sense input encoder power supply
	7	M encoder (M)	Ground, encoder power supply
	8	- Temp [1]	Motor temperature sensing KTY84-1C130 (KTY-) Temperature sensor KTY84-1C130 / PTC
	9	M sense	Ground sense input
	10	R	Reference signal R
	11	R*	Inverse reference signal R
	12	B*	Inverse incremental signal B
	13	B	Incremental signal B
	14	A* / data*	Inverted incremental signal A/inverted SSI data
	15	A / data	Incremental signal A/SSI data
Connector type:	15-pin Sub-D socket		
Measuring current via temperature sensor connection: 2 mA			

1) Accuracy of temperature measurement:
- KTY: ±7°C (including evaluation)
- PTC: ±5°C (including evaluation)

NOTICE

Damage to the encoder due to incorrect supply voltage

The encoder supply can be parameterized to 5 V or 24 V. The sensor may be destroyed if you enter the wrong parameters.

- Select the appropriate supply voltage.

NOTICE

Damage to motor in the event of incorrectly connected KTY temperature sensor

A KTY temperature sensor connected with incorrect polarity cannot detect if the motor overheats. Overheating can cause damage to the motor.

- Connect a KTY temperature sensor with the correct polarity.

You can find information for parameterizing the KTY temperature sensor in the SINAMICS S120 Function Manual (FH1) in Chapter "Monitoring and protective functions/thermal motor monitoring".

WARNING

Danger to life due to electric shock in the event of voltage flashovers at the temperature sensor

Voltage flashovers in the signal electronics can occur in motors without safe electrical separation of the temperature sensors.

- Use temperature sensors that fully comply with the specifications of the safety isolation.
- If safe electrical separation cannot be guaranteed (for linear motors or third-party motors, for example), use a Sensor Module External (SME120 or SME125) or Terminal Module TM120.

X521 / X531 alternative encoder system interface

Table 8- 14 X521/X531: Alternative encoder system interface

	Pin	Designation	Technical data
X521 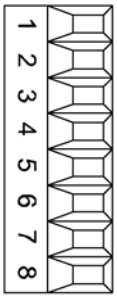	1	A	Incremental signal A
	2	A*	Inverse incremental signal A
	3	B	Incremental signal B
	4	B*	Inverse incremental signal B
	5	R	Reference signal R
	6	R*	Inverse reference signal R
	7	CTRL	Control signal
	8	M	Ground
X531 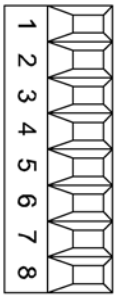	1	P_Encoder 5 V / 24 V	Encoder power supply
	2	M_Encoder	Ground, encoder power supply
	3	- Temp [1]	Motor temperature sensing KTY84-1C130 (KTY-) Temperature sensor KTY84-1C130 / PTC
	4	+ Temp [1]	Motor temperature sensing KTY84-1C130 (KTY+) Temperature sensor KTY84-1C130 / PTC
	5	Clock	SSI clock
	6	Clock*	Inverse SSI clock
	7	Data	SSI data
	8	Data*	Inverse SSI data
Max. connectable cross-section: 1.5 mm^2 Measuring current via the temperature sensor connection: 2 mA When unipolar HTL encoders are used, A*, B*, and R* on the terminal block must be jumpered with M_Encoder (X531)[2].			

[1] Accuracy of temperature measurement:
- KTY: ±7°C (including evaluation)
- PTC: ±5°C (including evaluation)

[2] Because the physical transmission media is more robust, the bipolar connection should always be used. The unipolar connection should only be used if the encoder type does not output push-pull signals.

WARNING

Danger to life through electric shock due to unconnected cable shields

Hazardous touch voltages can occur through capacitive cross-coupling due to unconnected cable shields.

- Attach the cable shield to the component for the encoder system connection at the terminals.

Temperature sensor connection

NOTICE
Damage to motor in the event of incorrectly connected KTY temperature sensor A KTY temperature sensor connected with incorrect polarity cannot detect if the motor overheats. Overheating can cause damage to the motor. • Connect a KTY temperature sensor with the correct polarity.

You can find information for parameterizing the KTY temperature sensor in the SINAMICS S120 Function Manual (FH1) in Chapter "Monitoring and protective functions/thermal motor monitoring".

Note

The maximum length of the temperature sensor cable is 100 m. The cables must be shielded.

⚠ WARNING
Danger to life due to electric shock in the event of voltage flashovers at the temperature sensor Voltage flashovers in the signal electronics can occur in motors without safe electrical separation of the temperature sensors. • Use temperature sensors that fully comply with the specifications of the safety isolation. • If safe electrical separation cannot be guaranteed (for linear motors or third-party motors, for example), use a Sensor Module External (SME120 or SME125) or Terminal Module TM120.

X524 Electronics power supply

Table 8- 15 X524: Electronics power supply

	Terminal	Function	Technical data
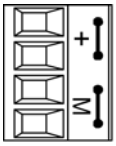	+	Electronics power supply	Voltage: 24 V (20.4 … 28.8 V) Current consumption: max. 0.55 A Max. current via jumper in connector: 20 A (15 A according to UL/CSA)
	+	Electronics power supply	
	M	Electronics ground	
	M	Electronics ground	
Type: Screw terminal 2 (Page 437) Max. cross-section that can be connected: 2.5 mm²			

The maximum cable length that can be connected is 10 m.

Note

The two "+" or "M" terminals are jumpered in the connector. This ensures that the supply voltage is looped through.

8.1.4.3 Connection examples

Connection example 1: HTL encoder, bipolar, with reference signal

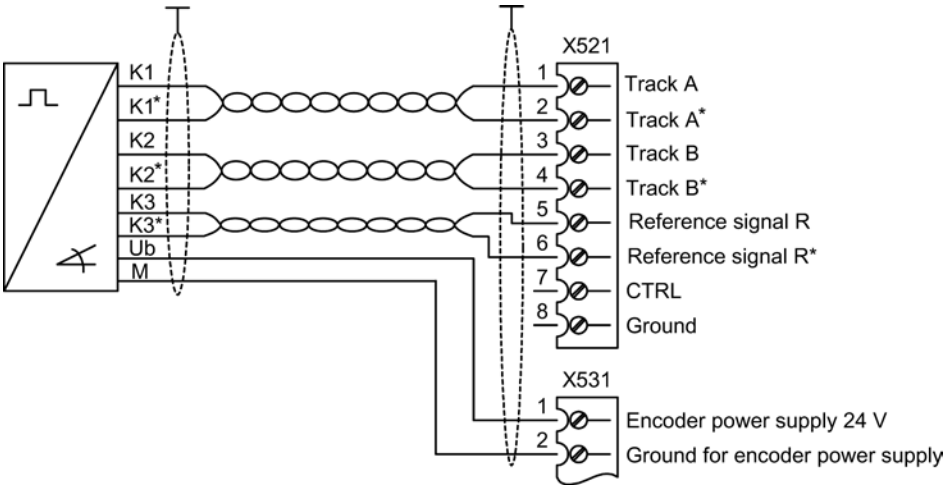

Figure 8-10 Connection example 1: HTL encoder, bipolar, with reference signal

Signal cables must be twisted in pairs to improve immunity to induced noise.

Connection example 2: HTL encoder, unipolar, with reference signal

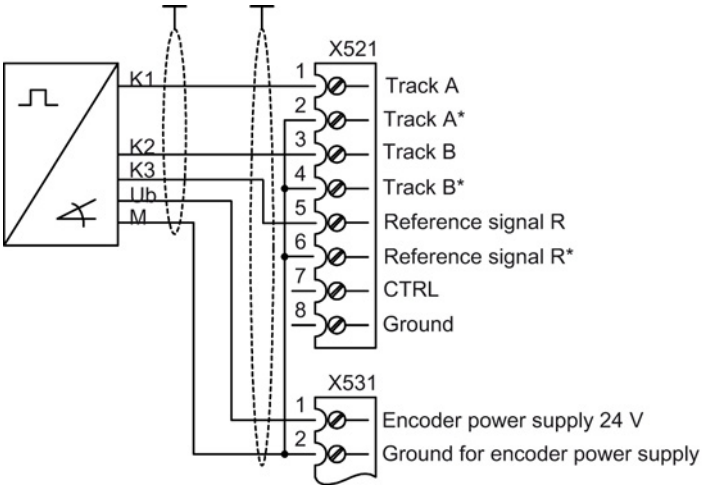

Figure 8-11 Connection example 2: HTL encoder, unipolar, with reference signal[1)]

[1)] Because the physical transmission media is more robust, the bipolar connection should always be used. The unipolar connection should only be used if the encoder type does not output push-pull signals.

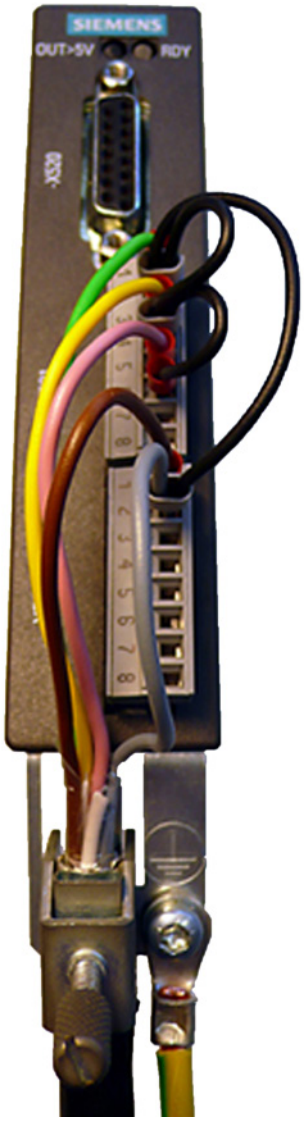

Figure 8-12 Photo of connection example 2: SMC30, 30 mm wide

Note: Diagram of the wire jumpers to connect unipolar HTL encoders with reference signal

8.1.4.4 Meaning of the LEDs

Meaning of LEDs on the Sensor Module Cabinet-Mounted SMC30

Table 8- 16 Meaning of LEDs on the Sensor Module Cabinet SMC30

LED	Color	State	Description, cause	Remedy
RDY READY	–	Off	The electronics power supply is missing or outside the permissible tolerance range.	–
	Green	Continuous light	The component is ready for operation. Cyclic DRIVE-CLiQ communication is taking place.	–
	Orange	Continuous light	DRIVE-CLiQ communication is being established.	–
	Red	Continuous light	This component has at least one fault. Note: LED is controlled irrespective of the corresponding messages being reconfigured.	Remedy and acknowledge fault
	Green/red	Flashing light 0.5 Hz	Firmware is being downloaded.	–
	Green/red	Flashing light 2 Hz	Firmware download is complete. The system waits for POWER ON.	Carry out a POWER ON
	Green/orange or Red/orange	Flashing light	Component recognition via LED is activated[1]. Note: Both options depend on the LED status when component recognition is activated.	–
OUT > 5 V	–	Off	The electronic power supply is missing or outside permissible tolerance range. Power supply ≤ 5 V.	–
	Orange	Continuous light	The electronics power supply for the encoder system is available. Power supply > 5 V Notice Make sure that the connected encoder can be operated with a 24 V power supply. If an encoder that is designed for a 5 V supply is operated with a 24 V supply, this can destroy the encoder electronics.	–

[1] See SINAMICS S120/S150 List Manual for the parameters to activate the recognition of components via LED

Cause and rectification of faults

The following documents contain information about the cause of faults and how they can be rectified:

SINAMICS S120 Commissioning Manual (IH1)

SINAMICS S120/S150 List Manual (LH1)

8.1.4.5 Dimension drawing

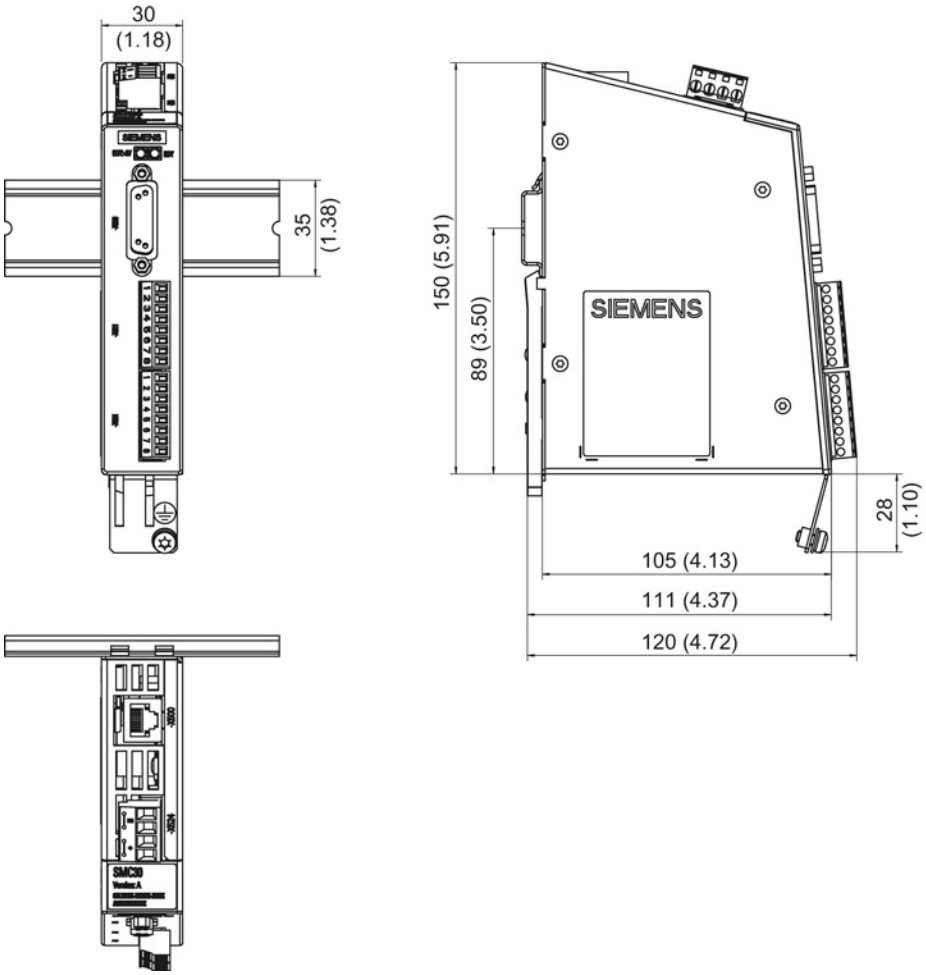

Figure 8-13 Dimension drawing of the Sensor Module Cabinet SMC30, all data in mm and (inches)

8.1.4.6 Mounting

Installation

1. Tilt the component backwards slightly and attach it to the DIN rail using the hooks.
2. Swivel the component onto the DIN rail until you hear the mounting slide at the rear latch into position.
3. Slide the components along the mounting rail to either the left or right up to their final position.

Removal

1. First shift the mounting slide downwards at the lug to release the interlocking with the mounting rail.
2. Swivel the component to the front and withdraw it upwards from the DIN rail.

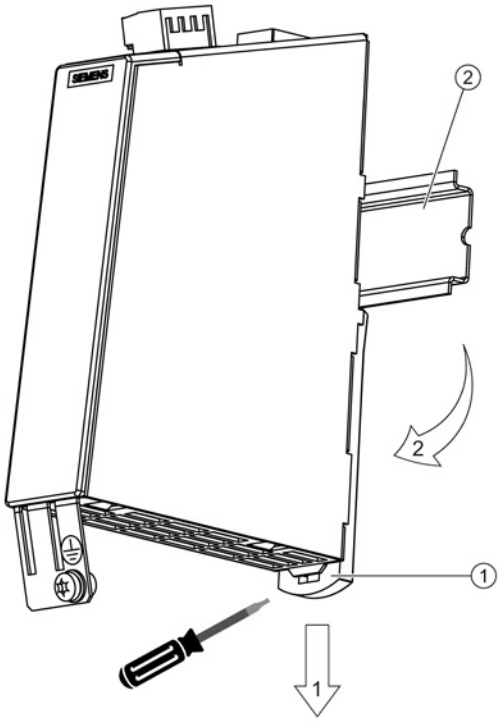

① Mounting slide
② Mounting rail

Figure 8-14 Removing from a DIN mounting rail

8.1.4.7 Protective conductor connection and shield support

Shield contacts are only required if the system is connected to X521/X531.

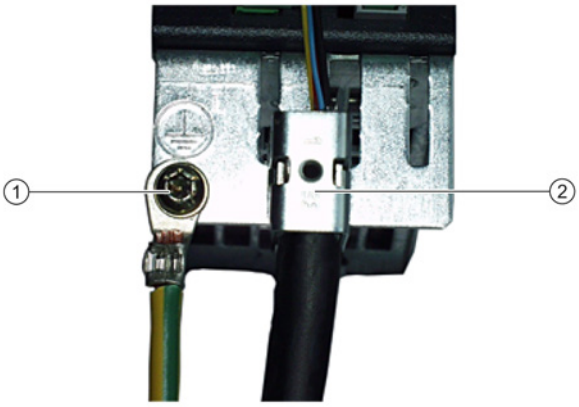

① Protective conductor connection M4 / 1.8 Nm

② Shield connection terminal, Weidmüller company, type: KLBÜ CO1, order number: 1753311001

Figure 8-15 Shield support and protective conductor connection

The bending radii of the cables must be taken into account (see MOTION-CONNECT description).

NOTICE
Damage or faulty operation due to incorrect shielding or inadmissible cable lengths If the correct shielding procedures or the permissible cable lengths are not observed, it can cause damage or the machine may malfunction. • Only use shielded cables. • Do not exceed the cable lengths stated in the technical data.

8.1.4.8 Technical data

Table 8- 17 Technical data

6SL3055-0AA00-5CA2	Unit	Value
Electronics power supply Voltage Current (without encoder system) Current (with encoder system) Power loss	 V_{DC} A_{DC} A_{DC} W	 24 (20,4 … 28,8) ≤ 0,20 ≤ 0,55 ≤ 10
Encoder system power supply Voltage Current	 V_{DC} A_{DC}	 5 (with or without remote sense) [1] or V_{DC} - 1 V 0.35
Encoder frequency that can be evaluated ($f_{encoder}$)	kHz	≤ 300
SSI baud rate	kBd	100 - 1000[2]
PE/ground connection		At the housing with M4/1.8 Nm screw
Weight		0,45
Degree of protection		IP20 or IPXXB

[1] A controller compares the encoder system supply voltage - sensed via the Remote Sense cables - with the reference supply voltage of the encoder system, and adjusts the supply voltage for the encoder system at the output of the sensor module until the required supply voltage is obtained directly at the encoder system (only for 5 V encoder system power supply). Remote Sense only to X520.

[2] See the diagram "Maximum cable length depending on the SSI baud rate for SSI encoders"

Connectable encoder systems

Table 8- 18 Specification of encoder systems that can be connected

Parameter	Designation	Threshold	Min.	Max.	Unit
High signal level (TTL bipolar at X520 or X521/X531) [1]	U_{Hdiff}		2	5	V
Low signal level (TTL bipolar at X520 or X521/X531)[1]	U_{Ldiff}		-5	-2	V
High signal level (HTL unipolar)	U_H[3]	High	17	V_{CC}	V
		Low	10	V_{CC}	V
Low signal level (HTL unipolar)	U_L[3]	High	0	7	V
		Low	0	2	V
High signal level (HTL bipolar)[2]	U_{Hdiff}		3	V_{CC}	V
Low signal level (HTL bipolar) [2]	U_{Ldiff}		$-V_{CC}$	-3	V
High signal level (SSI bipolar at X520 or X521/X531) [1]	U_{Hdiff}		2	5	V
Low signal level (SSI bipolar at X520 or X521/X531)[1]	U_{Ldiff}		-5	-2	V
Signal frequency	f_S		-	300	kHz
Edge clearance	t_{min}		100	-	ns
"Zero pulse inactive time" (before and after A=B=high)	t_{Lo}		640	$(t_{ALo-BHi} - t_{Hi})/2$[4]	ns
"Zero pulse active time" (while A=B=high and beyond) [5]	t_{Hi}		640	$t_{ALo-BHi} - 2*t_{Lo}$ [4]	ns

1) Other signal levels according to the RS 422 standard.

2) The absolute level of the individual signals varies between 0 V and VCC of the encoder system.

3) Only with order number 6SL3055-0AA00-5CA2 and firmware version 2.5 SP1 or higher can this value be configured using software. For older firmware releases and Order Nos. less than 6SL3055-0AA00-5CA2 then the "low" threshold applies.

4) $t_{ALo-BHi}$ is not a specified value, but is the time between the falling edge of track A and the next but one rising edge of track B.

5) Additional information on setting the "Zero pulse active time" can be found in the manual: SINAMICS S120, Function Manual, tolerant encoder monitoring for SMC30

Table 8- 19 Encoders that can be connected

	X520 (SUB-D)	X521 (terminal)	X531 (terminal)	Track monitoring	Remote Sense[2)]
HTL bipolar 24 V	Yes	Yes		Yes	no
HTL unipolar 24 V [1)]	Yes	Yes (however, a bipolar connection is recommended)[1)]		no	no
TTL bipolar 24 V	Yes	Yes		Yes	no
TTL bipolar 5 V	Yes	Yes		Yes	At X520
SSI 24 V/5 V	Yes	Yes		no	no
TTL unipolar	no				

1) Because the physical transmission media is more robust, the bipolar connection should always be used. The unipolar connection should only be used if the encoder type does not output push-pull signals.

2) A controller compares the encoder system supply voltage - sensed via the Remote Sense cables - with the reference supply voltage of the encoder system, and adjusts the supply voltage for the encoder system at the output of the sensor module until the required supply voltage is obtained directly at the encoder system (only for 5 V encoder system power supply).

Maximum encoder cable lengths

Table 8- 20 Maximum encoder cable length

Encoder type	Maximum encoder cable length in m
TTL[1)]	100
HTL unipolar[2)]	100
HTL bipolar	300
SSI	100[3)]

1) For TTL encoders at X520 → remote sense → 100 m

2) Because the physical transmission media is more robust, the bipolar connection should always be used. The unipolar connection should only be used if the encoder type does not output push-pull signals.

3) See the diagram "Maximum cable length depending on the SSI baud rate for SSI encoders"

SSI encoder

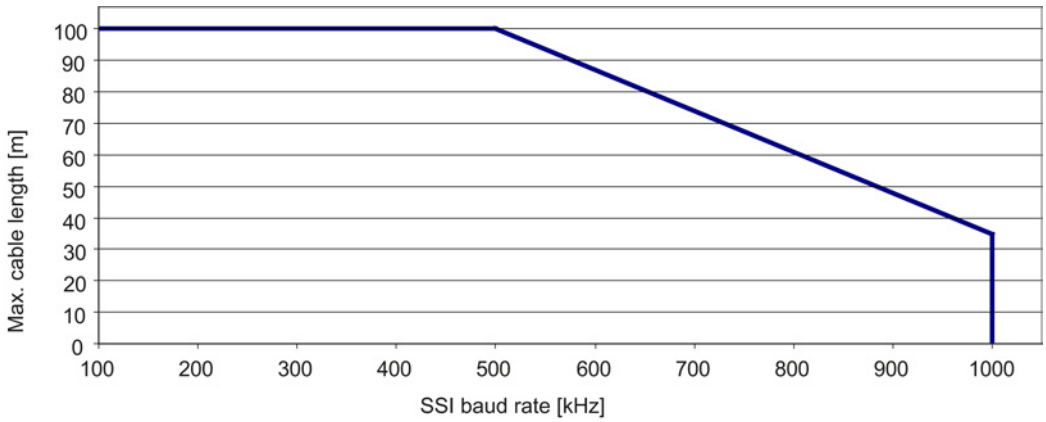

Figure 8-16 Maximum cable lengths depending on the SSI baud rate for SSI encoders

Encoders with 5 V supply connected to X521/X531

For encoders with a 5 V supply at X521/X531, the cable length depends on the encoder current (for 0.5 mm² cable cross-sections):

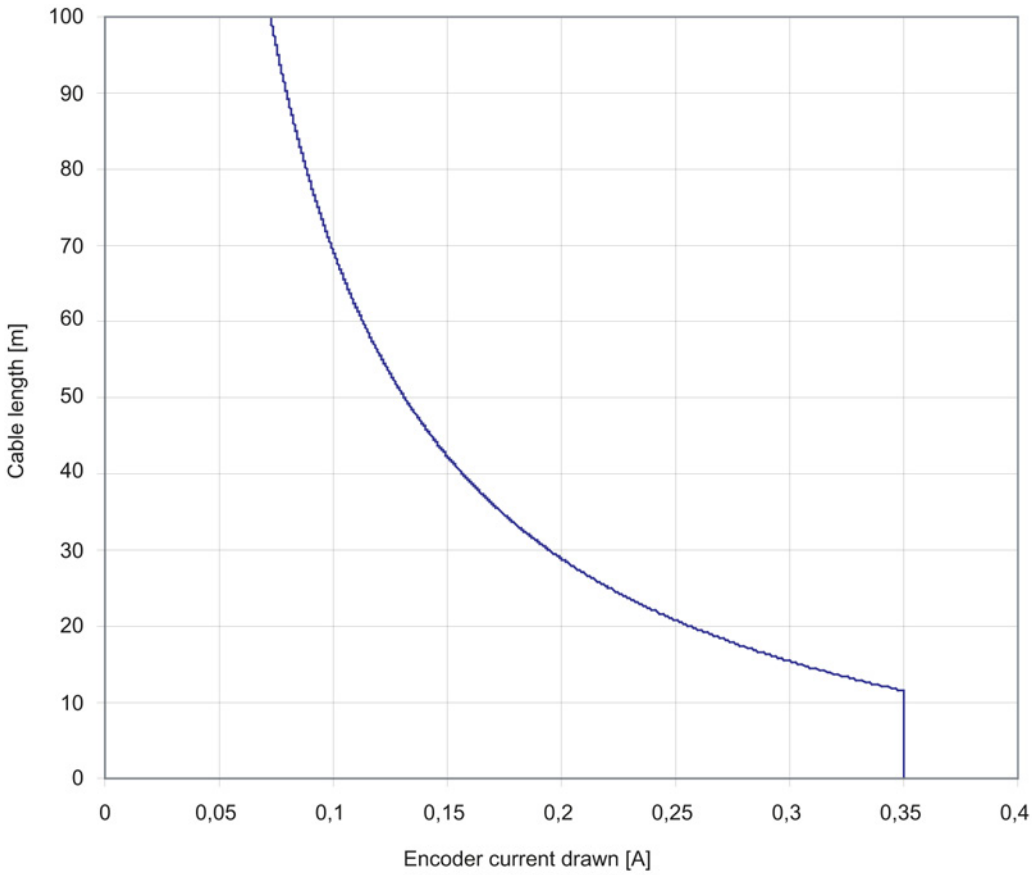

Figure 8-17 Max. cable length as a function of the encoder current drawn

Encoders without remote sense

For encoders without Remote Sense, the permissible cable length is restricted to 100 m. Reason: The voltage drop depends on the cable length and the encoder current.

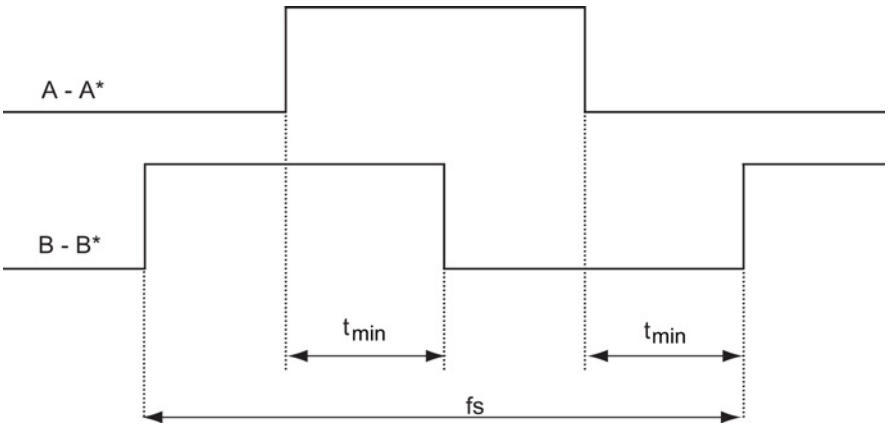

Figure 8-18 Signal characteristic of track A and track B between two edges: Time between two edges with pulse encoders

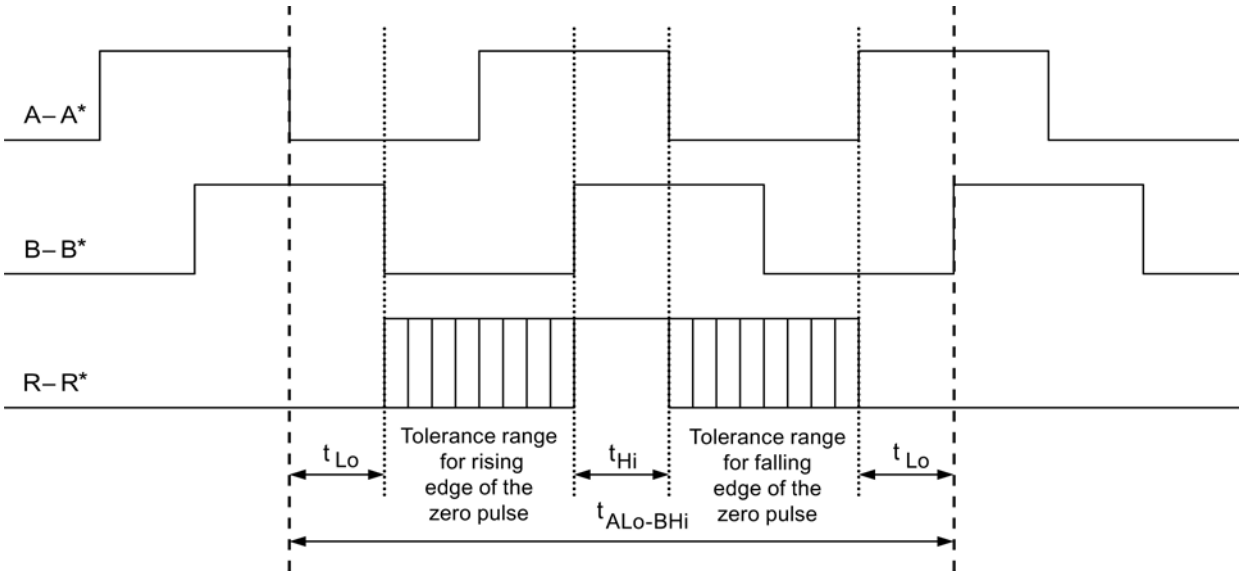

Figure 8-19 Position of the zero pulse to the track signals

8.2 Option module Safe Brake Relay

8.2.1 Introduction

A Safe Brake Relay is required for operating motors with holding brakes up to 2 A.

The Safe Brake Relay is the interface between the Control Unit / Blocksize Power Modules, and the 24 VDC motor brake.

The motor brake is electronically controlled.
The supply voltage for the motor brake must be separately connected to the Safe Brake Relay. A regulated power supply is required, whose rated value (to compensate for the voltage drop in the supply cable for the 24 VDC motor brake coil) can be set to 26 V, e.g. SITOP modular.

Table 8- 21 Interface overview the Safe Brake Relay

Type	Number
Connection for the solenoid of the motor brake	1
Connection for a 24 VDC power supply	1
Connection for the pre-fabricated (CTRL) to the Power Module, Blocksize format	1

The Safe Brake Relay is supplied with the pre-fabricated cable to connect to the Power Module and all of the customer connectors.

8.2.2 Safety instructions for Safe Brake Relays

Note

A regulated DC power supply is required to operate motors with a built-in holding brake. The voltage is supplied via the internal 24 V busbars. The voltage tolerances of the motor holding brakes and the voltage drops of the connection cables must be taken into account.

The DC power supply should be set to 26 V. This ensures that the supply voltage for the brake remains within the permissible range when the following conditions are fulfilled:

- Use of Siemens three-phase motors
- Use of Siemens MOTION-CONNECT power cables
- Motor cable lengths: max. 100 m

8.2.3 Interface description

8.2.3.1 Overview

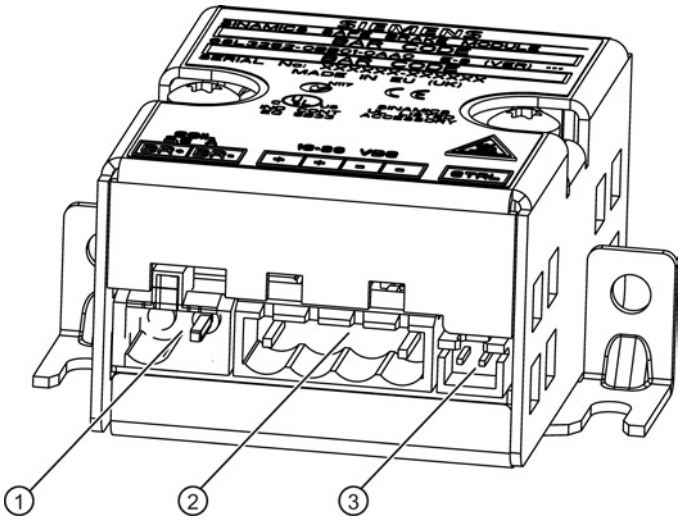

① Connection for the solenoid of the motor brake
② Connection for the 24 VDC power supply
③ Connection for the pre-fabricated (CTRL) to the Power Module, Blocksize format

Figure 8-20 Interface description: Safe Brake Relay

8.2.3.2 X524 electronics power supply

Table 8- 22 X524 electronics power supply

	Terminal	Function	Technical data
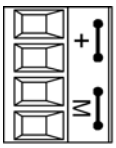	+	Electronics power supply	Voltage: 24 V (20.4 … 28.8 V) Current consumption: max. 0.3 A (without motor holding brake) Maximum current via jumper in connector: 20 A (15 A according to UL/CSA)
	+	Electronics power supply	
	GND	Electronics ground	
	GND	Electronics ground	
Type: Screw-type terminal 2 (Page 437) Max. cross-section that can be connected: 2.5 mm²			

The maximum cable length that can be connected is 10 m.

Note

The two "+" and/or "M" terminals are jumpered in the connector. This ensures that the supply voltage is looped through.

8.2.3.3 Brake connection

Table 8- 23 Connector

Designation	Technical specifications
Brake connection	Relay output (close)
PE connection	M4 / 3 Nm

8.2.4 Connection example

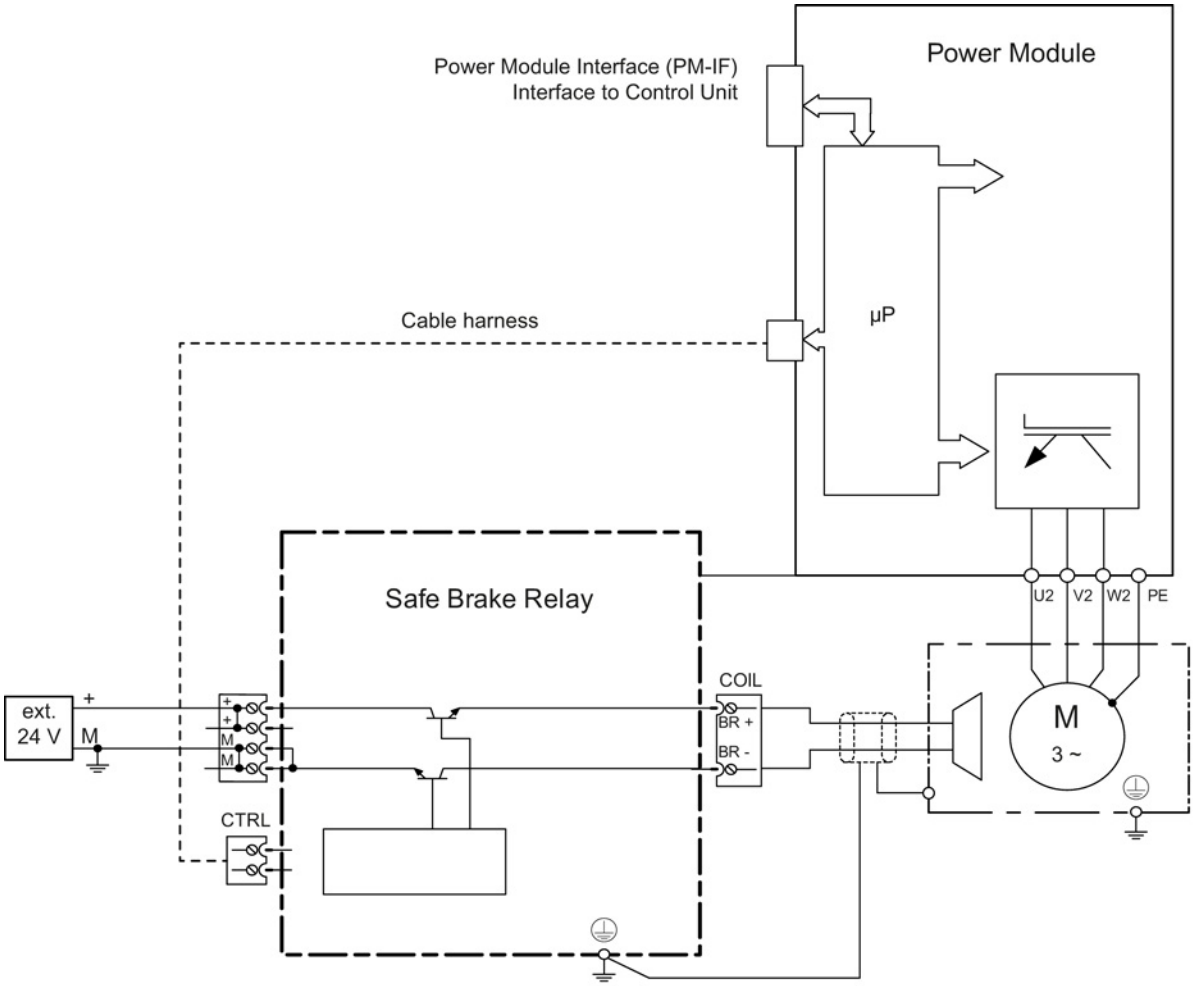

Figure 8-21 Safe Brake Relay connection example

8.2.5 Dimension drawing

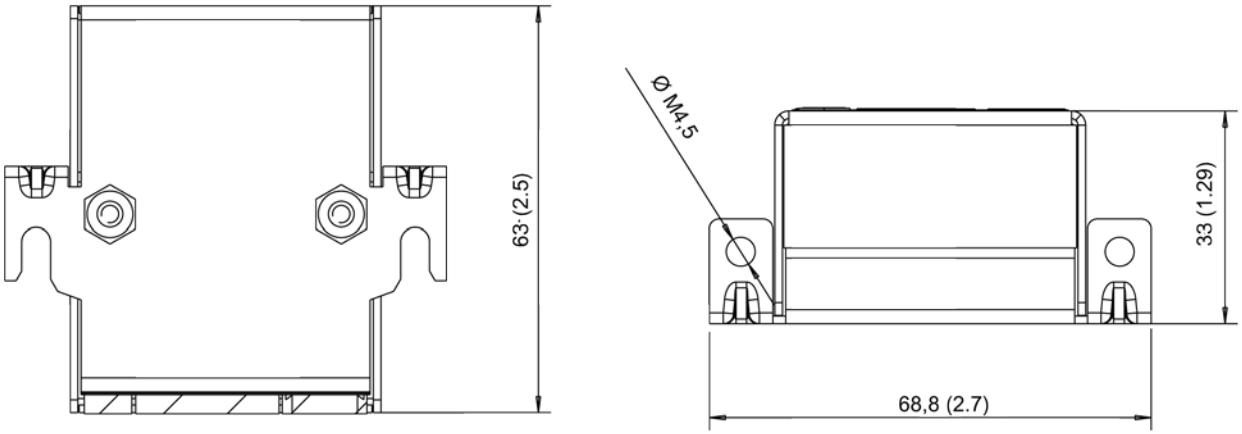

Figure 8-22 Dimension drawing of Safe Brake Relay, all data in mm and (inches)

8.2.6 Mounting

Installation with PM240-2 Power Modules

The Safe Brake Relay is installed at the rear of the cabinet next to the Power Module.

Installation with PM340 Power Modules

The Safe Brake Relay is either installed beneath the Power Module on the screening kit or alternatively on the cabinet rear panel

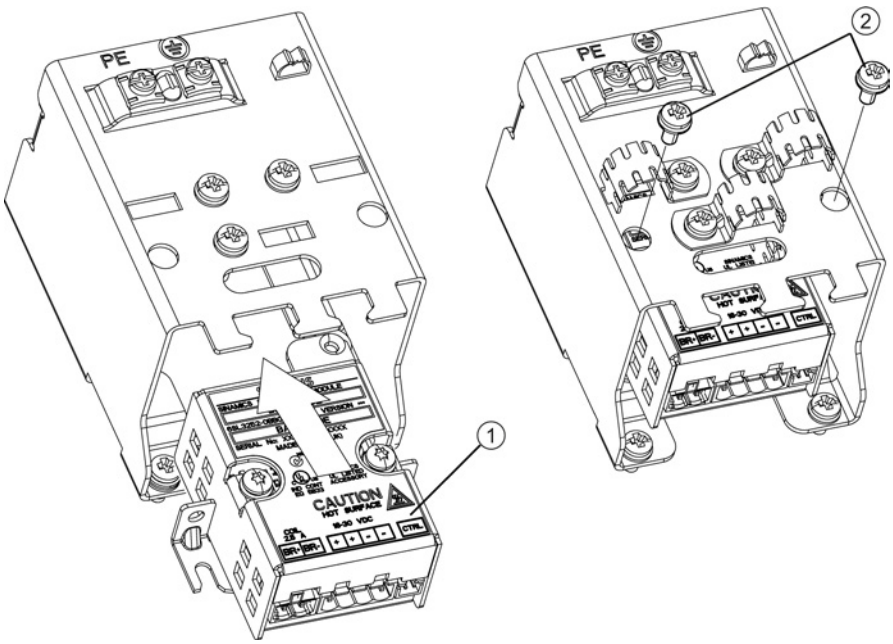

① Safe Brake Relay
② Fixing screws

Figure 8-23 Mounting the Safe Brake Relay and shield connection kit (frame size FSA)

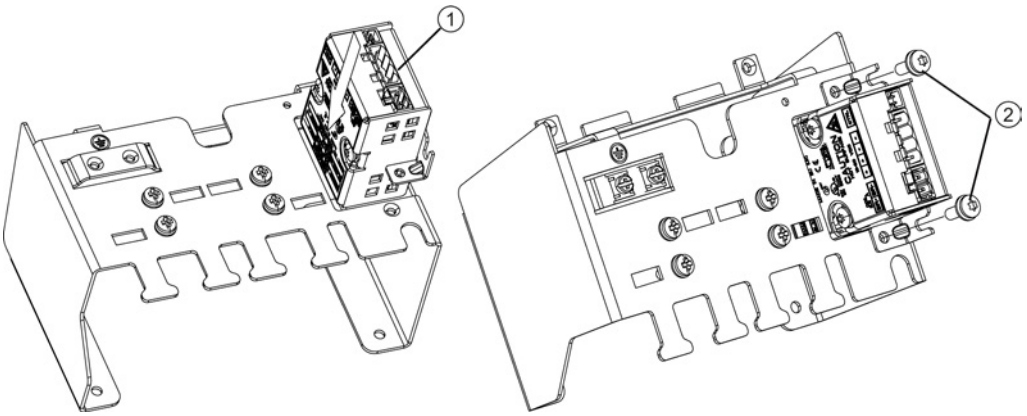

① Safe Brake Relay
② Fixing screws

Figure 8-24 Mounting the Safe Brake Relay and shield connection kit (frame size FSB / FSC)

8.2.7 Technical data

Table 8- 24 Technical data

6SL3252-0BB01-0AA0	Unit	
Power supply	V_{DC}	20,4 … 28,8 Recommended nominal value of the power supply 26 VDC (to equalize and compensate for the voltage drop along the feeder cable to the 24 VDC solenoid of the motor brake)
Current requirement, max. Motor brake at 24 VDC	 A A	 2 0.05 + current requirement of the motor brake
Conductor cross section, max.	mm^2	2,5
Dimensions (W x H x D)	mm	69 x 63 x 33
Weight	kg	Approx. 0.17

8.3 Safe Brake Adapter optional module

8.3.1 Description

The Safe Brake Adapter (SBA) is required to implement Safe Brake Control (SBC) in conjunction with Power Modules in the chassis format.

The Safe Brake Control (SBC) is a safety function, that is used in safety-related applications, e.g. in presses or in rolling mills. In the no-current state, the brake acts on the motor of the drive using spring force. The brake is released (opened) when current flows through it (=low active).

Power must be connected to terminal X12 on the Safe Brake Adapter.

For controlling the brake, a connection must be established between terminal X14 on the Safe Brake Adapter and the motor holding brake.

For the control, a connection must be established between the Safe Brake Adapter and the Control Interface Module.
The cable harness with order number 6SL3060-4DX04-0AA0 can be used.

Fast de-energization

In some cases, DC brakes are operated with an upstream brake rectifier (230 VAC input side) for fast de-energization. Some brake rectifiers are equipped with two additional connections for switching the brake load on the DC side. This allows the brake coil to be quickly de-energized, i.e. braking starts earlier.

The Safe Brake Adapter supports such fast de-energization via the two additional connections for X15.1 and X15.2. This function does not belong to the safe brake control.

8.3.2 Safety instructions for Safe Brake Adapters

⚠ WARNING

Danger to life due to release of motor brake when connection cable is damaged

If the connection cable between the Safe Brake Adapter and the motor brake is broken or short circuited, this may result in the motor brake being supplied with power and released. If the motor cannot be braked, death or serious injury may result.

- Test the motor brake by means of the Safety Integrated Extended Function "Safe Brake Test."

NOTICE

Damage to the Safe Brake Adapter when connecting a 24 V DC brake

If a 24 V DC brake is connected to the 230 V AC Safe Brake Adapter on the system side, this may cause damage to the Safe Brake Adapter. This can result in the following undesirable effects:

- Closing the brake is not displayed on the LEDS.

- The fuse is tripped.

- The contact service life of the relay is reduced.

- Do not connect a 24 V DC brake to the 230 V AC Safe Brake Adapter on the system side.

Note

The integrated safety functions, starting from the Safety Integrated (SI) input terminals of the SINAMICS components (Control Unit, Motor Module), satisfy the requirements according to EN 61800-5-2, EN 60204-1, DIN EN ISO 13849-1 Category 3 (formerly EN 954-1) for Performance Level (PL) d and IEC 61508 SIL2.

With the Safe Brake Adapter, the requirements specified in EN 61800-5-2, EN 60204-1, DIN EN ISO 13849-1 Category 3 (formerly EN954-1) as well as for Performance Level (PL) d and IEC 61508 SIL 2 are fulfilled.

8.3.3 Interface description

8.3.3.1 Overview

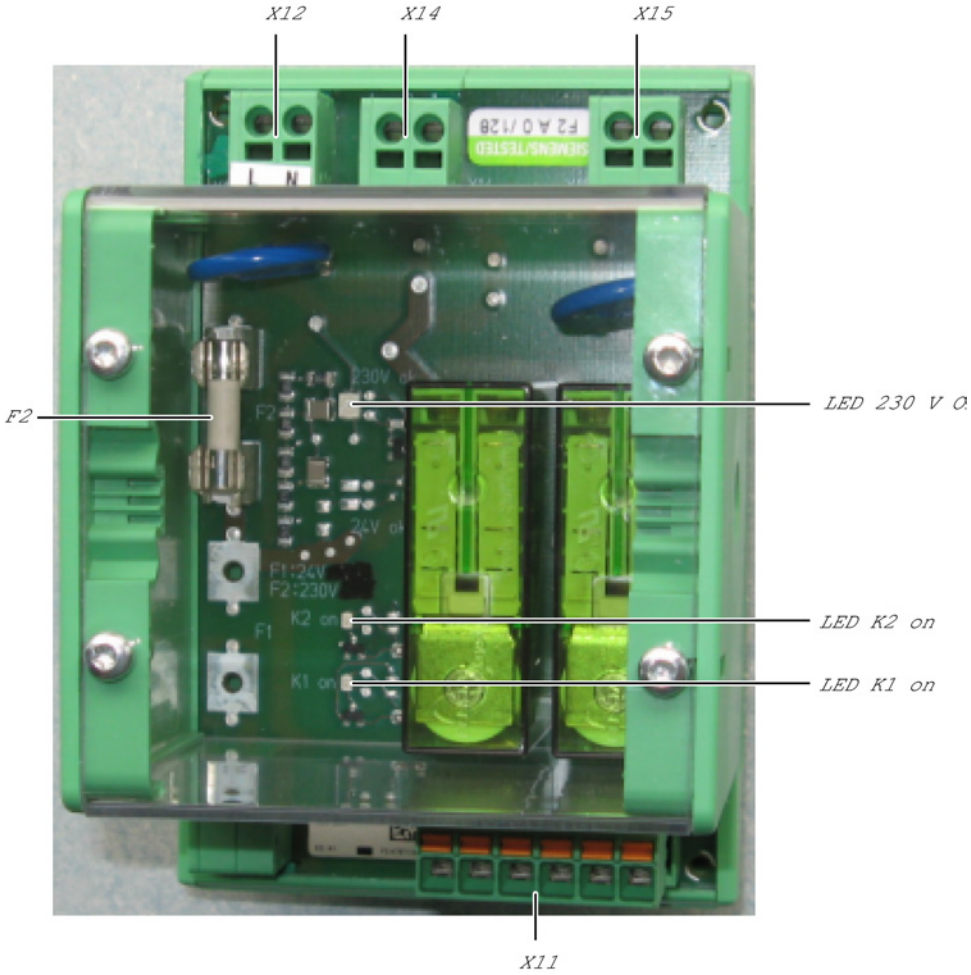

Figure 8-25 Interface overview, Safe Brake Adapter 230 VAC

F2 fuse

Type of spare fuse: 2 A, time-lag

8.3.3.2 X11 interface to the Control Interface Module

Table 8- 25 X11 interface to the Control Interface Module

Terminal	Signal	Description	Technical data
X11.1	BR+	Control channel 1	Connection to Control Interface Board, X46.1
X11.2	BR-	Control channel 2	Connection to Control Interface Board, X46.2
X11.3	FB+	Relay feedback signal	Connection to Control Interface Board, X46.3
X11.4	FB-	Ground of the relay feedback signal	Connection to Control Interface Board, X46.4
X11.5	P24	P24 of the auxiliary voltage to supply the feedback signal	Connection to Control Interface Board, X42.2
X11.6	M	Ground of the auxiliary voltage	Connection to Control Interface Board, X42.3
Max. connectable cross-section: 2.5 mm²			

⚠ WARNING

Fire hazard due to overheating when permissible cable lengths are exceeded

Excessively long power cables can cause overheating of components with resulting fire and smoke development.

- The maximum permissible cable length of 10 m between the 230 V AC Safe Brake Adapter and the Control Interface module must not be exceeded.
  Use the cable harness (length: 4 m) order no. 6SL3060-4DX04-0AA0.

8.3.3.3 X12 230 V AC power supply

Table 8- 26 X12 230 V AC power supply

Terminal	Signal	Technical data
X12.1	L	Supply voltage: AC 230 V
X12.2	N	Current consumption: 2 A
Max. connectable cross-section: 2.5 mm²		

8.3.3.4 X14 load connection

Table 8- 27 X14 load connection

Terminal	Signal	Technical data
X14.1	BR L	Supply voltage: AC 230 V
X14.2	BR N	Current consumption: 2 A
Max. connectable cross-section: 2.5 mm^2		

⚠ WARNING

Fire hazard due to overheating when permissible cable lengths are exceeded

Excessively long power cables can cause overheating of components with resulting fire and smoke development.

- The maximum permissible cable length of 300 m between the Safe Brake Adapter 230 V AC and the brake must not be exceeded.

  Information for precise calculation of the maximum cable length can be found in the Configuration Manual: SINAMICS-Low Voltage.

8.3.3.5 X15 fast de-energization

Table 8- 28 X15 fast de-energization

Terminal	Signal	Technical data
X15.1	AUX 1	Supply voltage: AC 230 V
X15.2	AUX 2	Current consumption
Max. connectable cross-section: 2.5 mm^2		

8.3.4 Connection example

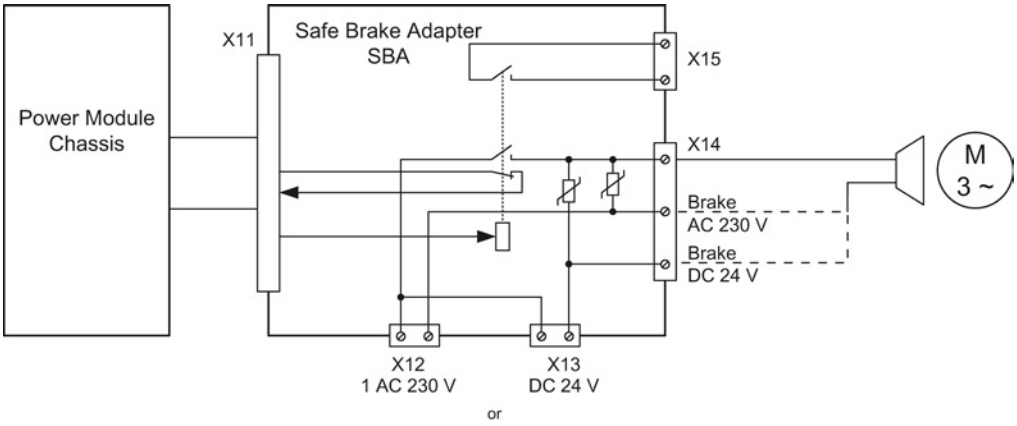

Figure 8-26 Connection example for a Safe Brake Adapter

8.3.5 Dimension drawing

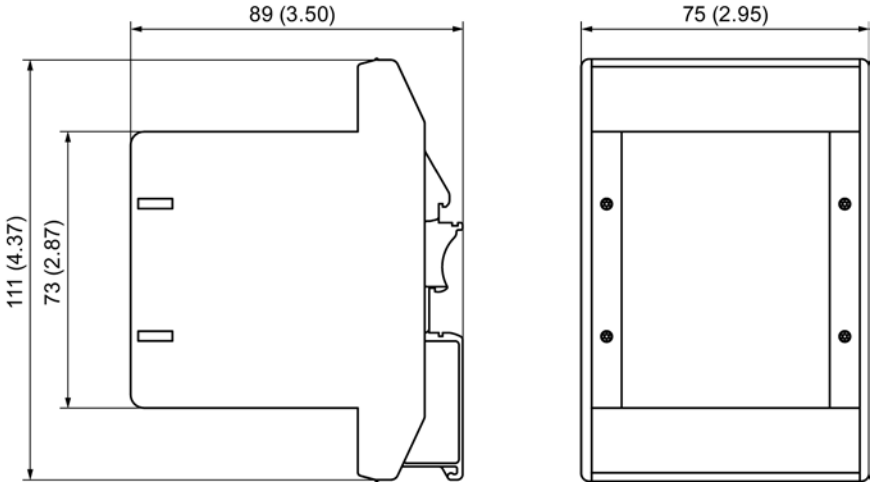

Figure 8-27 Dimension drawing of Safe Brake Adapter, all data in mm and (inches)

8.3.6 Mounting

Safe Brake Adapter

The Safe Brake Adapter is designed for mounting on a rail in accordance with EN 60715

Housing cover after replacing the fuse

An adhesive label is provided on the housing cover indicating the position of the connector. You should attach the housing cover so that the labeling on the label matches the connectors.

8.3.7 Technical data

Table 8- 29 Technical data

6SL3355-2DX00-1AA0	Unit	Value
Electronics power supply (power supply via the Control Interface Module)	V_{DC}	24 (20,4 … 28,8)
Power supply Motor holding brake	V_{AC}	230
Current consumption, max. Motor holding brake Fast de-energization	 A A	 2 2
Weight	kg	0,25

Accessories 9

9.1 DRIVE-CLiQ cabinet bushing

9.1.1 Description

A DRIVE-CLiQ cabinet bushing is used to connect the DRIVE-CLiQ cables between the inside and outside of the control cabinet. It is used in a control cabinet panel. The data lines and the voltage supply contacts of the DRIVE-CLiQ are also routed through the bushing. The DRIVE-CLiQ cabinet bushing for DRIVE-CLiQ cables is available with DRIVE-CLiQ connector and M12 connector/socket.

DRIVE-CLiQ cabinet bushing for DRIVE-CLiQ connectors

The cabinet bushing has degree of protection IP54 according to EN 60529 from the outside towards the inside. Inside the control cabinet, a connection is established according to degree of protection IP20 or IPXXB acc. to EN 60529. So that the complete outside of the cabinet bushing, including the DRIVE-CLiQ interface, has degree of protection IP54, a DRIVE-CLiQ cable must be used, which as a minimum must also have degree of protection IP54.

DRIVE-CLiQ cabinet bushing for M12 plug/socket

The cabinet bushing has degree of protection IP67 according to EN 60529 from the outside towards the inside. Inside the cabinet a connection according to degree of protection IP67 in compliance with EN 60529 is realized.

NOTICE
Damage through use of incorrect DRIVE-CLiQ cables Damage or malfunctions can occur on the devices or system when DRIVE-CLiQ cables are used that are either incorrect or have not been approved for this purpose. • Only use suitable DRIVE-CLiQ cables that have been approved by Siemens for the particular application.

9.1.2 Interface description

9.1.2.1 Overview

DRIVE-CLiQ cabinet bushing for DRIVE-CLiQ cables with DRIVE-CLiQ connectors

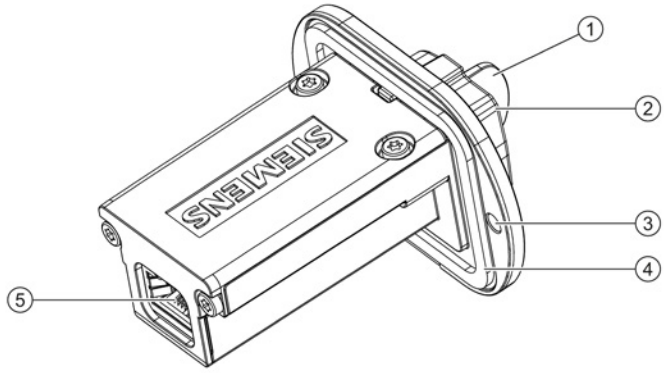

① Protective cap, Yamaichi, order number: Y-ConAS-24-S
② DRIVE-CLiQ interface on the outside (to connect DRIVE-CLiQ signal cables MOTION-CONNECT with IP67 degree of protection)
③ Mounting holes
④ Flange-type seal to ensure degree of protection IP54 on the outside of the control cabinet
⑤ DRIVE-CLiQ interface on the inside (to connect DRIVE-CLiQ signal cables MOTION-CONNECT with IP20 degree of protection)

Figure 9-1 Interface overview, DRIVE-CLiQ cabinet bushing

DRIVE-CLiQ cabinet bushing for DRIVE-CLiQ cables with M12 plug/socket

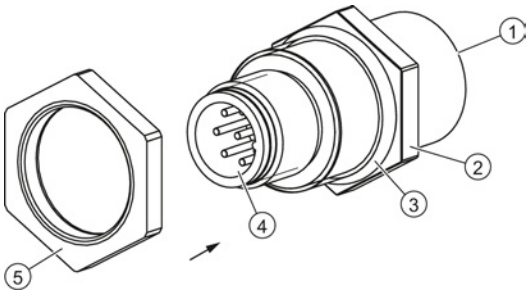

① DRIVE-CLiQ interface with M12 socket (8-pin)
② Flange, SW18
③ Seal
④ DRIVE-CLiQ interface with M12 plug (8-pin)
⑤ O ring, SW20, tightening torque: 3 to 4 Nm

Figure 9-2 Interface overview, DRIVE-CLiQ cabinet bushing M12

9.1.3 Dimension drawings

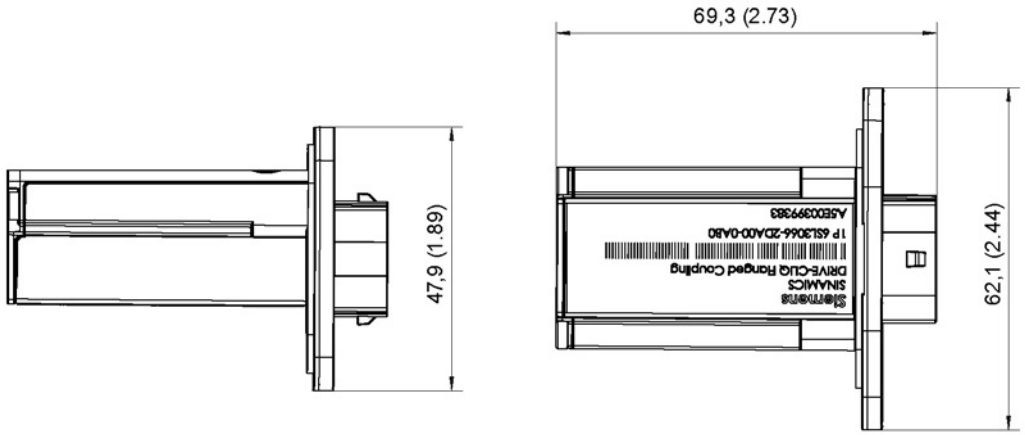

Figure 9-3 Dimension drawing of the DRIVE-CLiQ cabinet gland, all dimensions in mm and (inches)

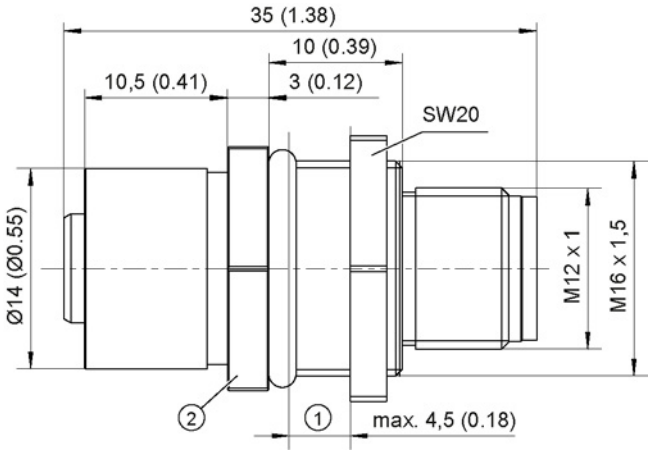

① Cabinet panel
② Flange, SW18

Figure 9-4 Dimension drawing of the DRIVE-CLiQ cabinet bushing M12, all dimensions in mm and (inches)

9.1.4 Installation

9.1.4.1 DRIVE-CLiQ cabinet bushing for cables with DRIVE-CLiQ connectors

In order to install the DRIVE-CLiQ cabinet gland, you must make a cutout in the control cabinet panel as shown in the diagram below.

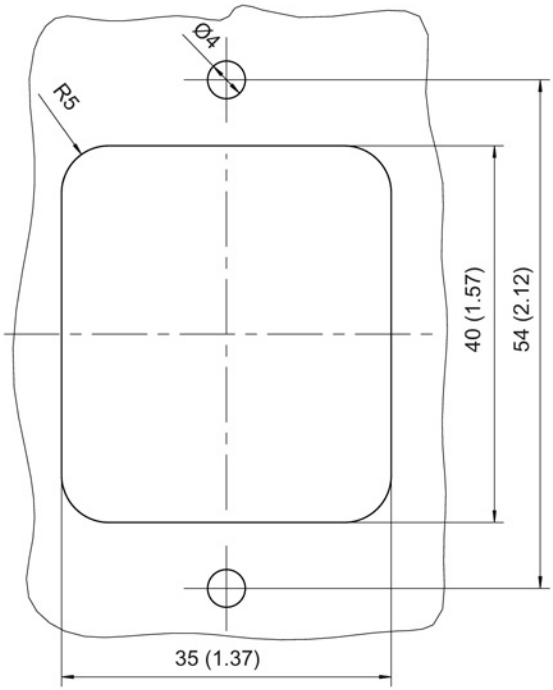

Figure 9-5 Cutout in the control cabinet, all dimensions in mm and (inches)

Installation

1. Insert the DRIVE CLiQ cabinet bushing from the outside of the control cabinet through the cutout in the control cabinet.
2. Attach the DRIVE-CLiQ cabinet bushing to the outer control cabinet panel using 2 M3 screws and 2 nuts. In order to ensure good electromagnetic compatibility, a good electrical connection must be established between the DRIVE-CLiQ cabinet gland and the cabinet panel over a large surface area.

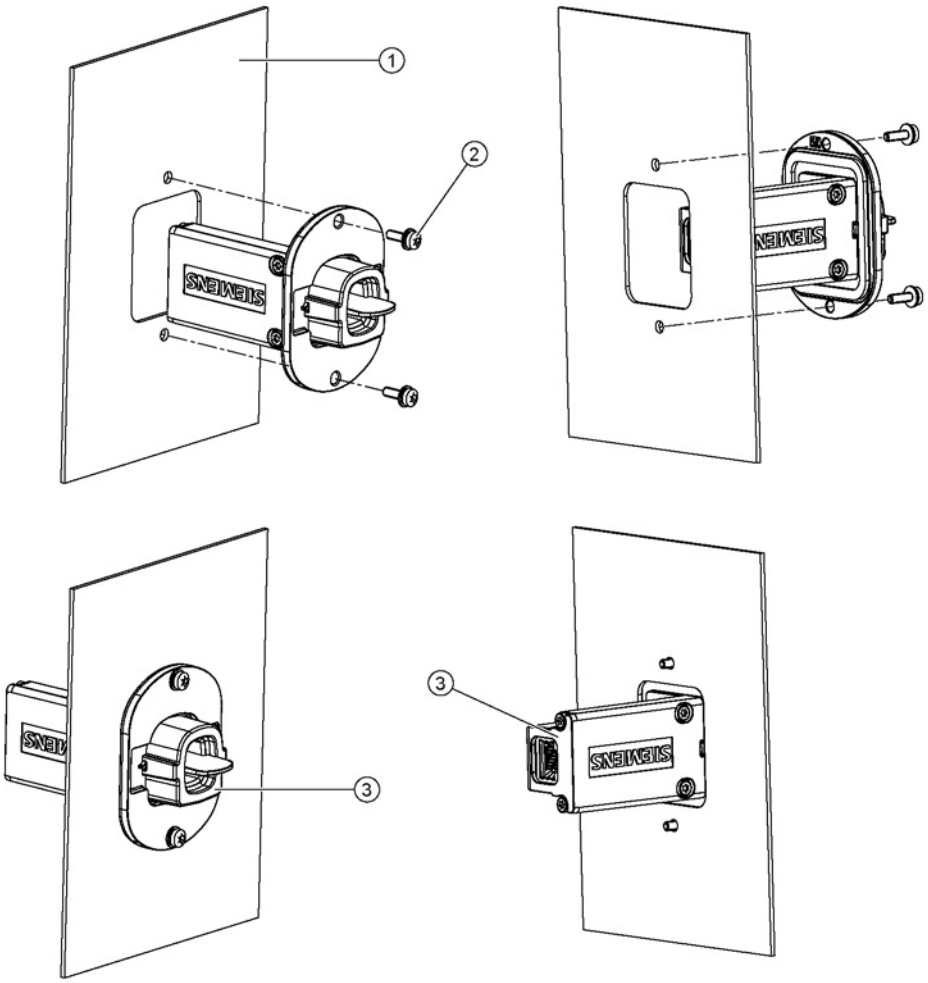

① Control cabinet panel
② M3 screw, tightening torque 0.8 Nm
③ DRIVE-CLiQ cabinet bushing

Figure 9-6 Installing the DRIVE-CLiQ cabinet bushing for cables with DRIVE-CLiQ connectors

9.1.4.2 DRIVE-CLiQ cabinet bushing for cables with M12 plug/socket

Prepare the cabinet panel for mounting the DRIVE-CLiQ cabinet bushing M12 as shown below. The removable O ring can be screwed from the inside or the outside.

Mounting from the inside using an O ring that can be screwed

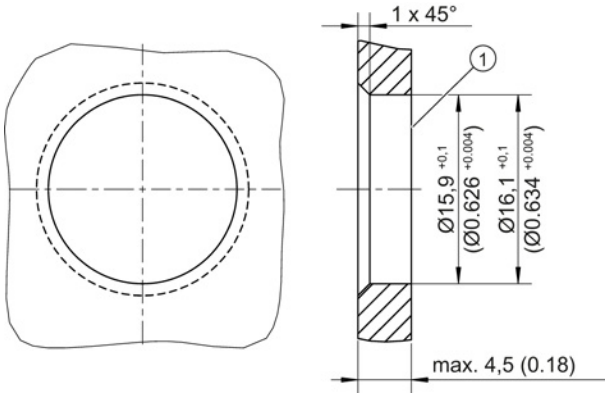

① Through-hole with chamfer

Figure 9-7 Through-hole for mounting the DRIVE-CLiQ cabinet bushing M12 with an O-ring that can be screwed from the inside

Mounting from the outside using an O ring that can be screwed

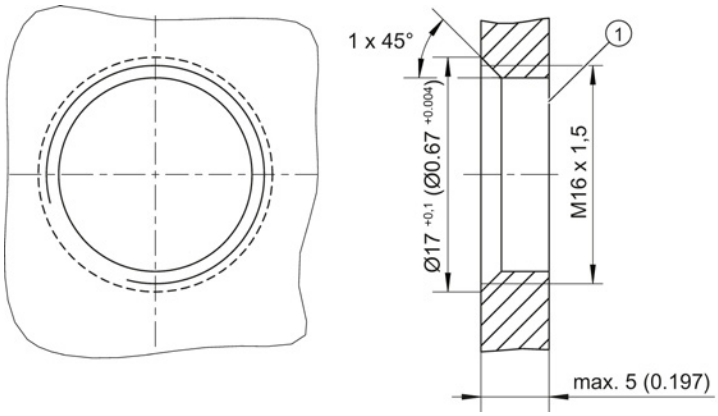

① Threaded hole with chamfer

Figure 9-8 Threaded hole for mounting the DRIVE-CLiQ cabinet bushing M12 with an O-ring that can be screwed from the outside

Installation

1. Insert the DRIVE-CLiQ cabinet bushing through the opening in the cabinet.
2. Fasten the DRIVE-CLiQ cabinet bushing using the associated O ring with a tightening torque of 3 to 4 Nm

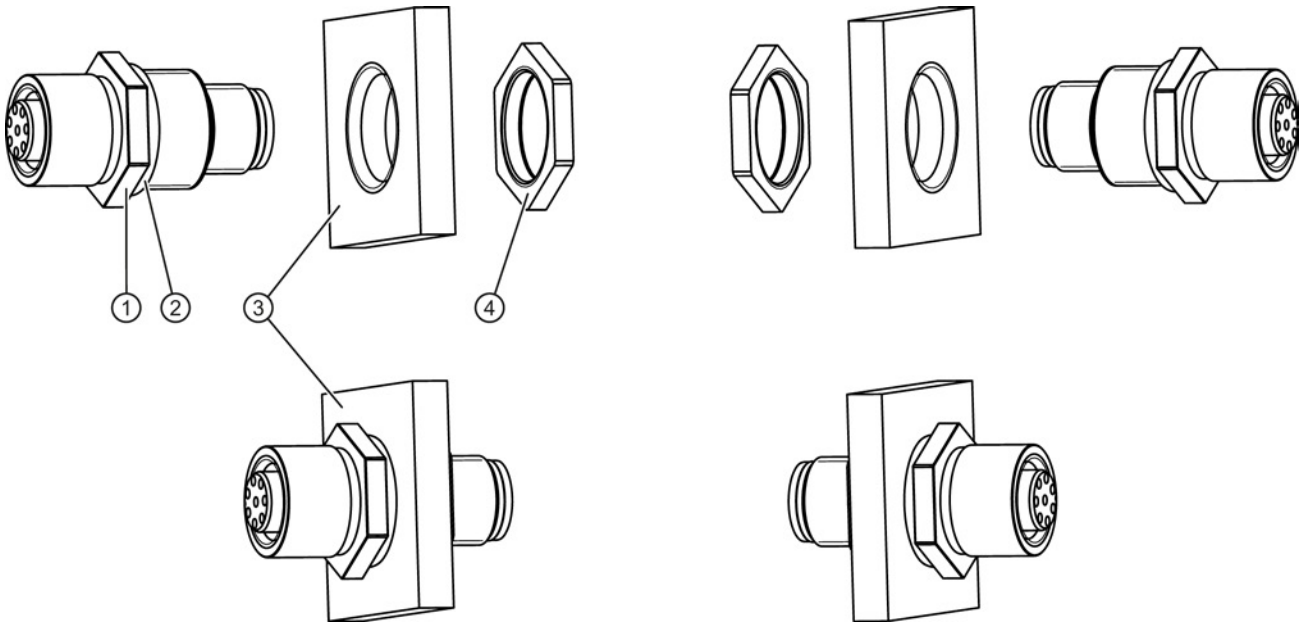

① Flange, SW18
② Seal
③ Cabinet panel
④ O ring, SW20, tightening torque: 3 to 4 Nm

Figure 9-9 Mounting DRIVE-CLiQ cabinet bushings for cables with M12 connectors

9.1.5 Technical data

Table 9- 1 Technical data of DRIVE-CLiQ cabinet bushings

	Unit	6SL3066-2DA00-0AA0 DRIVE-CLiQ	6FX2003-0DT67 M12
Weight	kg	0.165	0.035
Degree of protection according to EN 60529		IP54 outside the control cabinet IP20 or IPXXB inside the control cabinet	IP67

9.2 DRIVE-CLiQ coupling

9.2.1 Description

The DRIVE-CLiQ coupling is used to connect 2 DRIVE-CLiQ cables in accordance with degree of protection IP67 acc. to EN 60529.

In addition to the data lines, the power supply contacts of DRIVE-CLiQ are also routed via the coupling.

You can find information on the permissible cable length in Chapter DRIVE-CLiQ signal cables (Page 427)

NOTICE
Damage through use of incorrect DRIVE-CLiQ cables Damage or malfunctions can occur on the devices or system when DRIVE-CLiQ cables are used that are either incorrect or have not been approved for this purpose. • Only use suitable DRIVE-CLiQ cables that have been approved by Siemens for the particular application.

9.2.2 Interface description

9.2.2.1 Overview

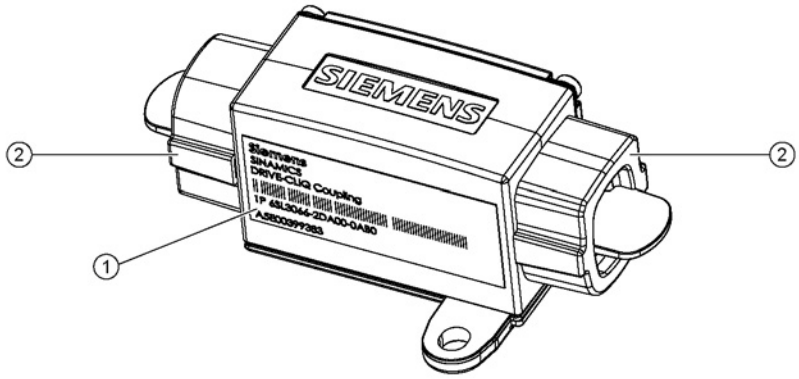

① Rating plate
② Protective cap, Yamaichi, order number: Y-ConAS-24-S

Figure 9-10 Interface overview, DRIVE-CLiQ coupling

9.2.3 Dimension drawing

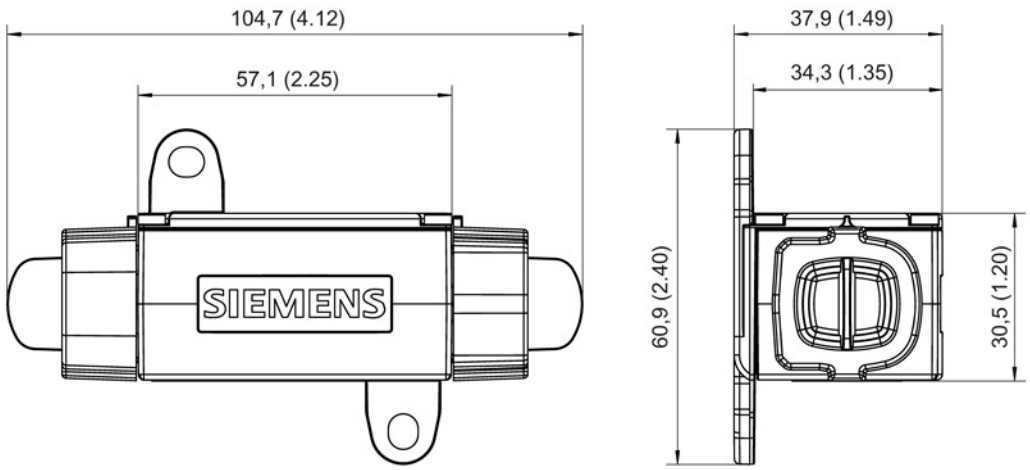

Figure 9-11 Dimension drawing of the DRIVE-CLiQ coupling, all dimensions in mm and (inches)

9.2.4 Mounting

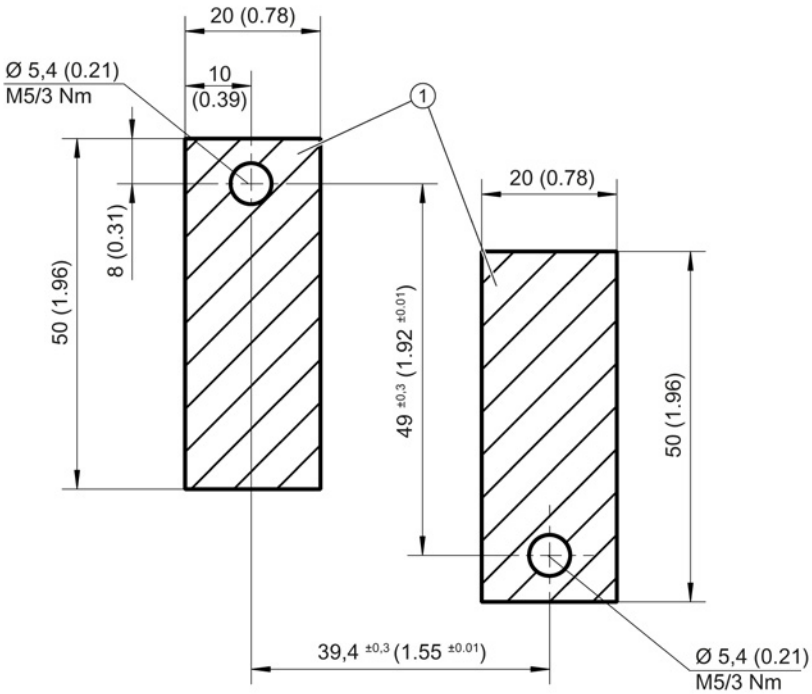

① Contact surface

Figure 9-12 Hole drilling pattern for installation

Installation

1. Attach the DRIVE-CLiQ coupling to the mounting surface as shown in the drilling pattern.
2. Remove the protective caps of the DRIVE-CLiQ coupling.
3. Latch the DRIVE-CLiQ connectors at both sides of the DRIVE-CLiQ coupling.

9.2.5 Technical data

Table 9- 2 Technical data

DRIVE-CLiQ coupling 6SL3066-2DA00-0AB0	Unit	
Weight	kg	0,272
Degree of protection	IP67 acc. to EN 60529	

9.3 Mounting frame

9.3.1 Description

The 240-2 Push Through Power Modules should be installed using a mounting frame inside the cabinet. This mounting frame includes the necessary seals and frame to ensure compliance with degree of protection IP54.

Order numbers

- FSA: 6SL3260-6AA00-0DA0
- FSB: 6SL3260-6AB00-0DA0
- FSC: 6SL3260-6AC00-0DA0

The supplementary package contains all the necessary nuts and seals.

9.3.2 Dimension drawings

Dimension drawings of mounting frame, frame sizes FSA to FSC

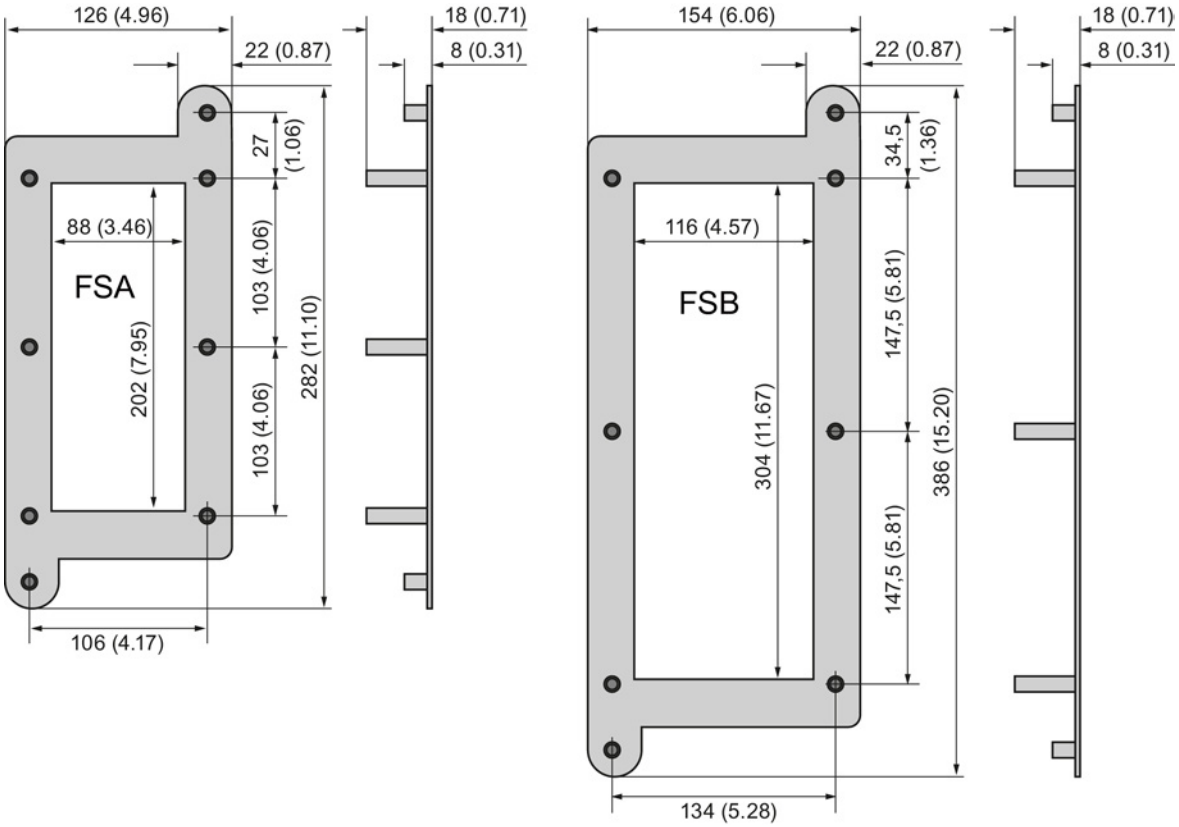

Figure 9-13 Dimension drawing of mounting frame, frame size FSA and FSB, all data in mm and (inches)

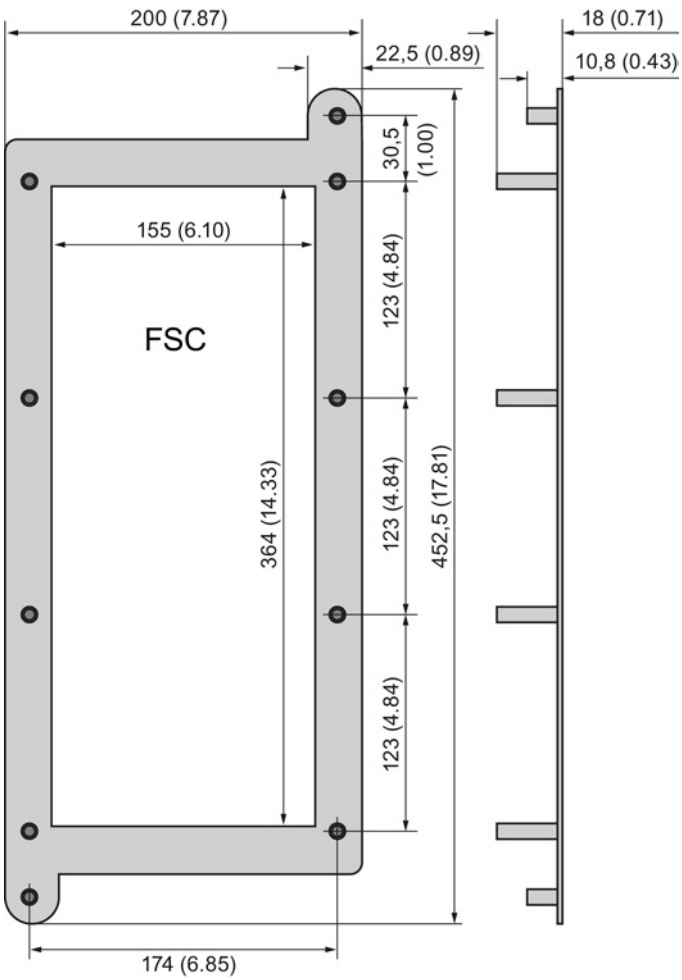

Figure 9-14 Dimension drawing of mounting frame, frame size FSC, all data in mm and (inches)

9.3.3 Mounting

Installation steps

1. Make an installation cutout and drill holes for the Power Module and the mounting frame according to the drilling pattern.
2. Fasten the mounting frame to the outer wall of the cabinet. Tighten the two screws finger-tight.
3. Attach the seal to the inner side of the control cabinet.
4. Fasten the Power Module. Tighten the screws finger-tight.
5. Tighten all screws with a torque of 3.5 Nm.
6. To fulfill EMC requirements, the mounting surface of the heat sink must be free of any paint.

9.4 Shield connection kit

9.4.1 Description

A shield connection kit is offered as an optional shield support for PM340 Power Modules in frame sizes FSA to FSF. It is used to connect the shields of two power cables. The shield connection kit is screwed directly onto the panel of the control cabinet for frame sizes FSA to FSC. For frame sizes FSD to FSF, it is attached to the Power Module.

For frame sizes FSB and FSC, the screening kit accessories pack contains a ferrite core for damping high-frequency cable disturbances.

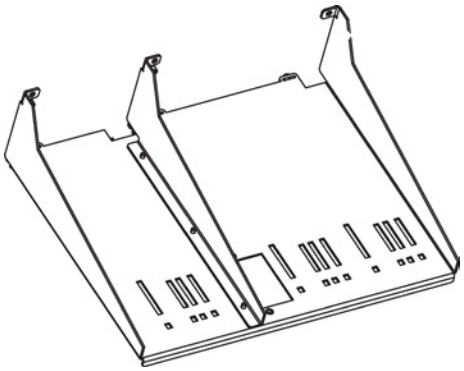

Figure 9-15 Shield connection kit for attachment to a PM340 Power Module, frame size FSD/FSE

Table 9- 3 Overview, shield connection kits for PM340 Power Modules, frame size FSA to FSF

PM340 frame size	FSA	FSB	FSC	FSD	FSE	FSF
6SL3262-	1AA00-0BA0	1AB00-0DA0 (with ferrite core)	1AC00-0DA0 (with ferrite core)	1AD00-0DA0	1AD00-0DA0	1AF00-0DA0

9.4.2 Dimension drawings

9.4.2.1 Shield connection kits

Dimension drawings, screening kit, frame sizes FSA to FSC

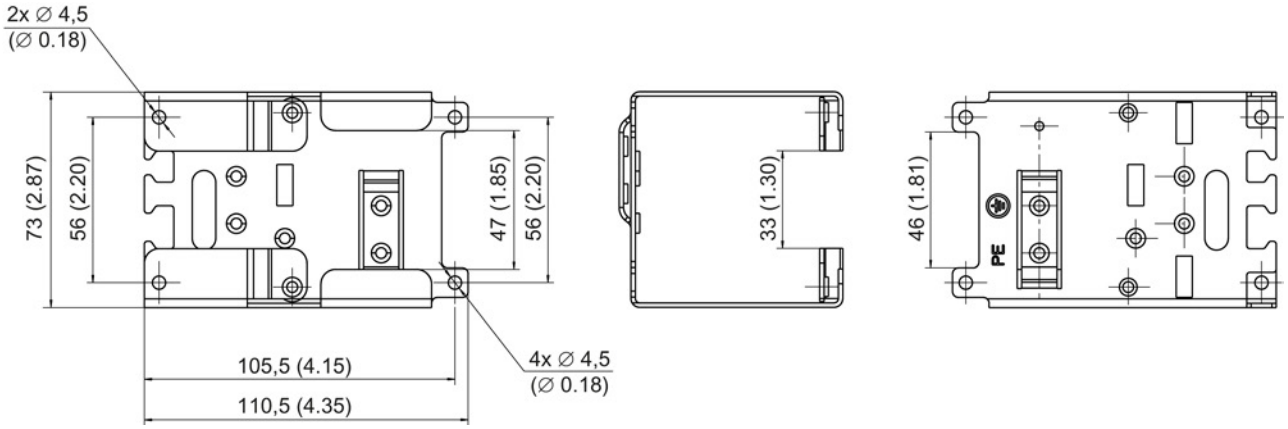

Figure 9-16 Dimension drawing of the shield connection kit for PM340 Power Modules, frame size FSA, all data in mm (inches)

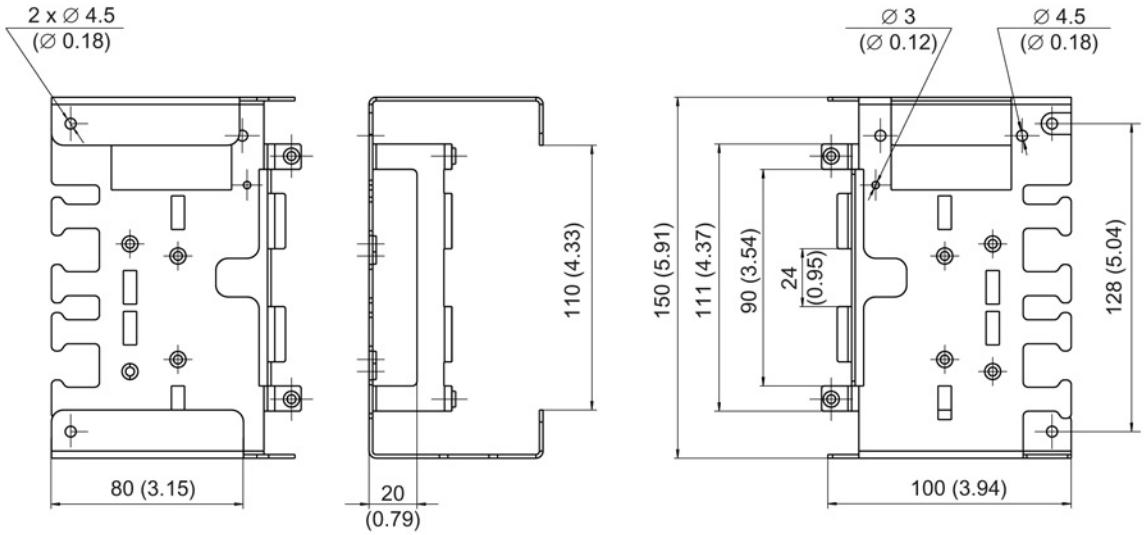

Figure 9-17 Dimension drawing of the shield connection kit for PM340 Power Modules, frame size FSB, all data in mm (inches)

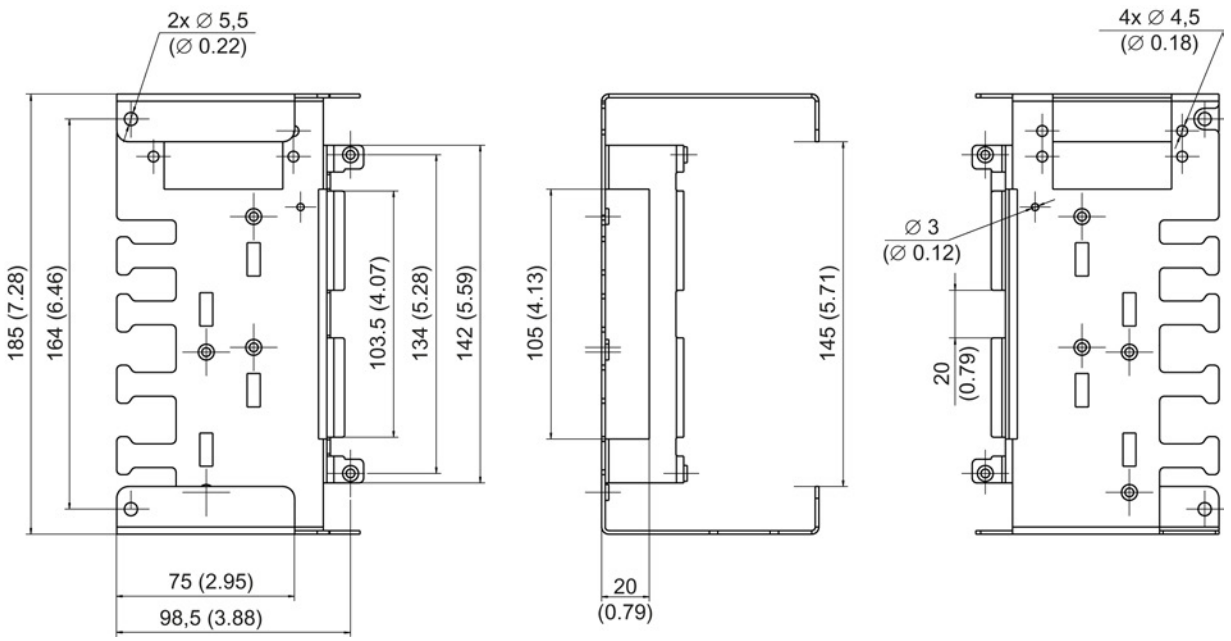

Figure 9-18 Dimension drawing of the shield connection kit for PM340 Power Modules, frame size FSC, all data in mm (inches)

9.4.2.2 Blocksize Power Modules with shield connection kit

Dimension drawings of Power Modules with shield connection kit, frame sizes FSA to FSF

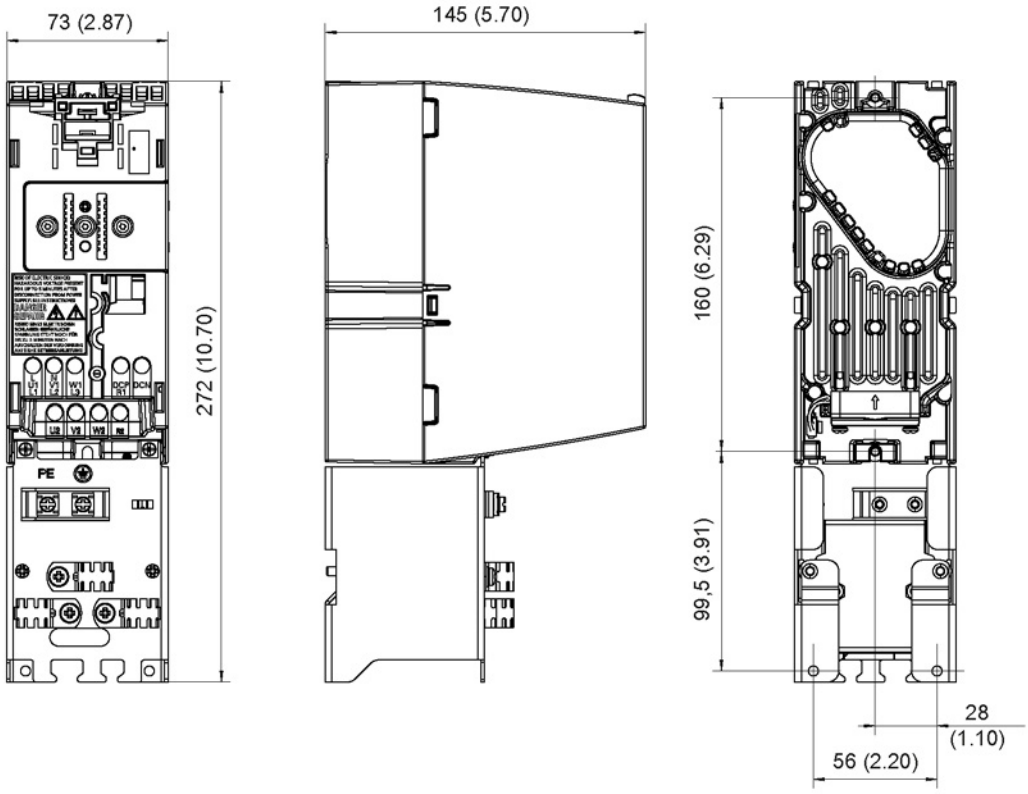

Figure 9-19 Dimension drawing of PM340 Power Module with shield connection kit, frame size FSA, dimensions in mm (inches)

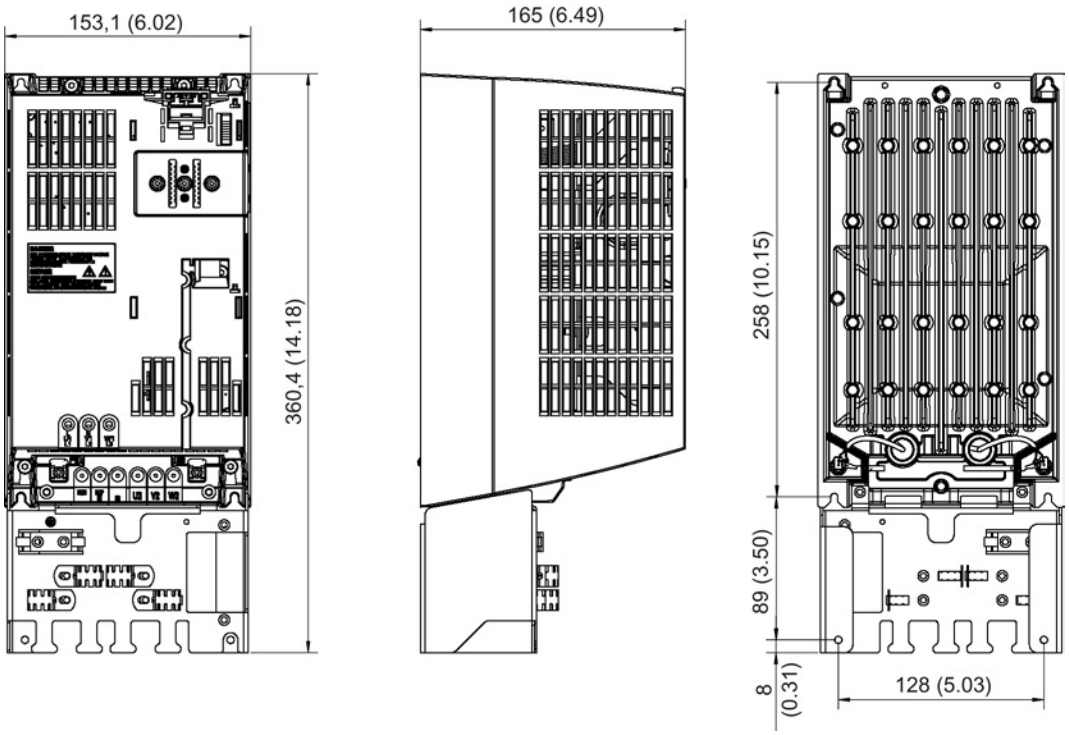

Figure 9-20 Dimension drawing of PM340 Power Module with shield connection kit, frame size FSB, dimensions in mm (inches)

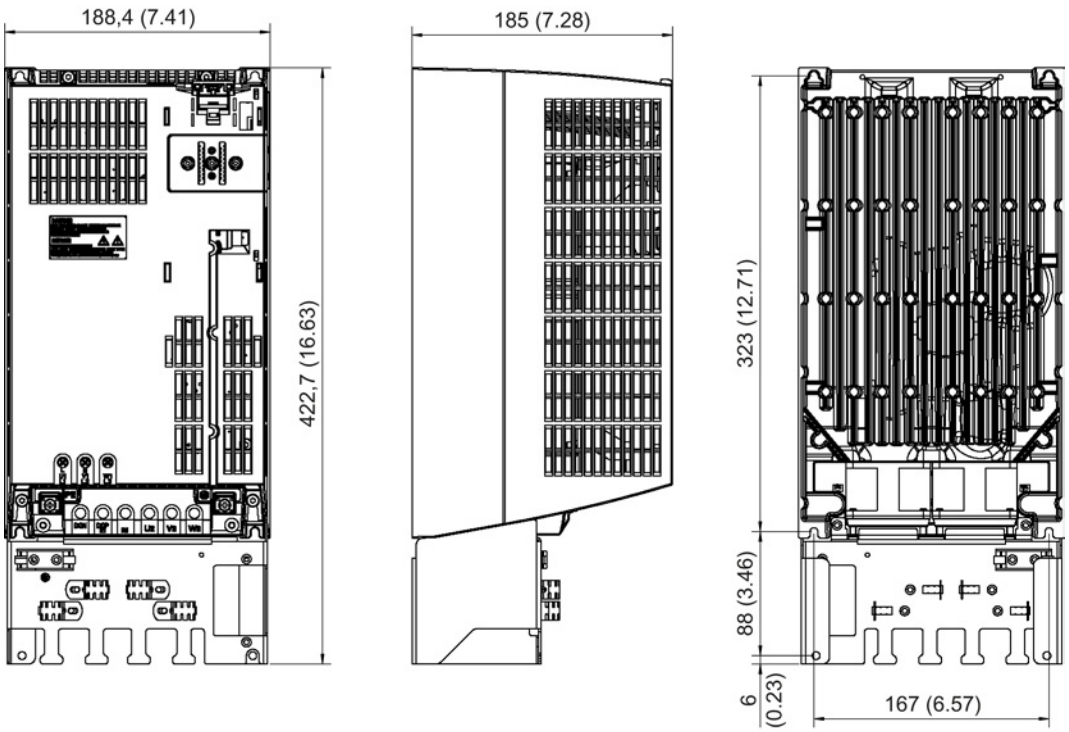

Figure 9-21 Dimension drawing of PM340 Power Module with shield connection kit, frame size FSC, dimensions in mm (inches)

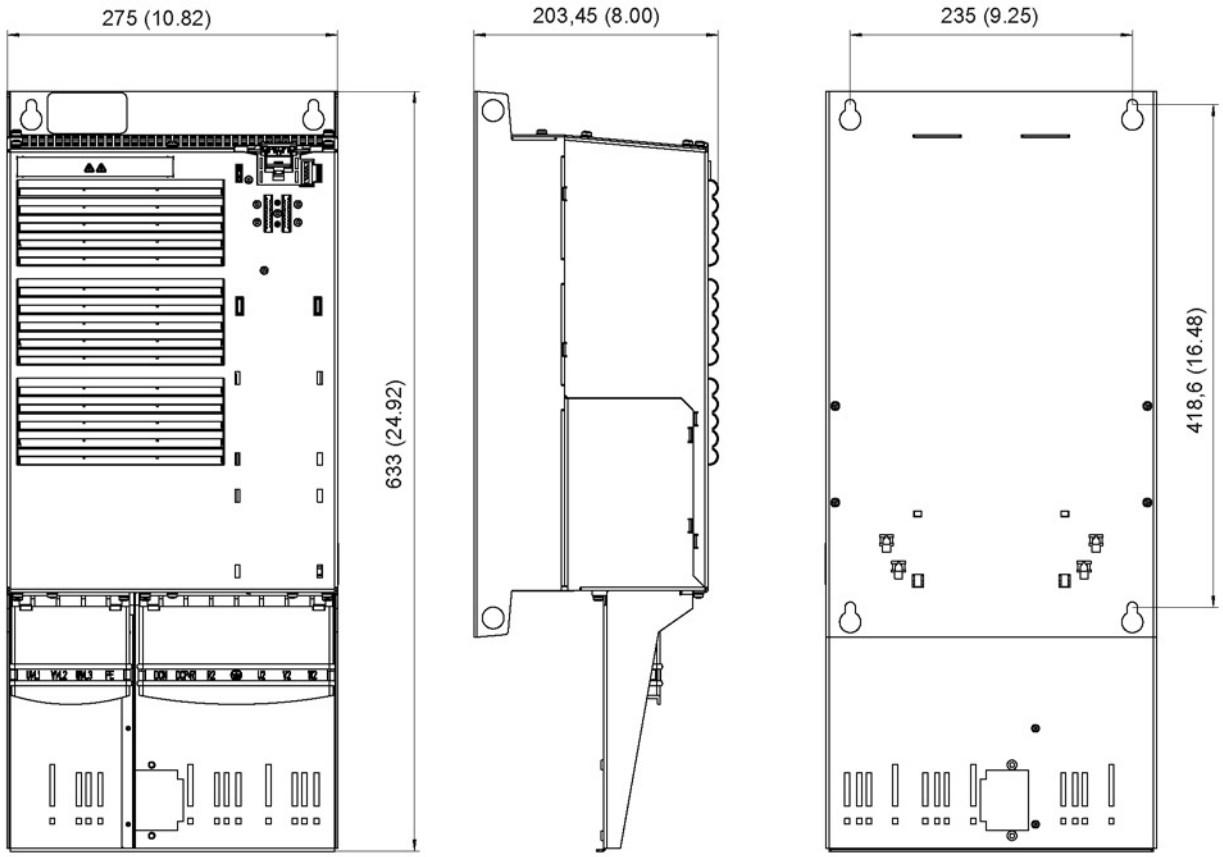

Figure 9-22 Dimension drawing of PM340 Power Module with shield connection kit, frame size FSD with integrated line filter, dimensions in mm (inches)

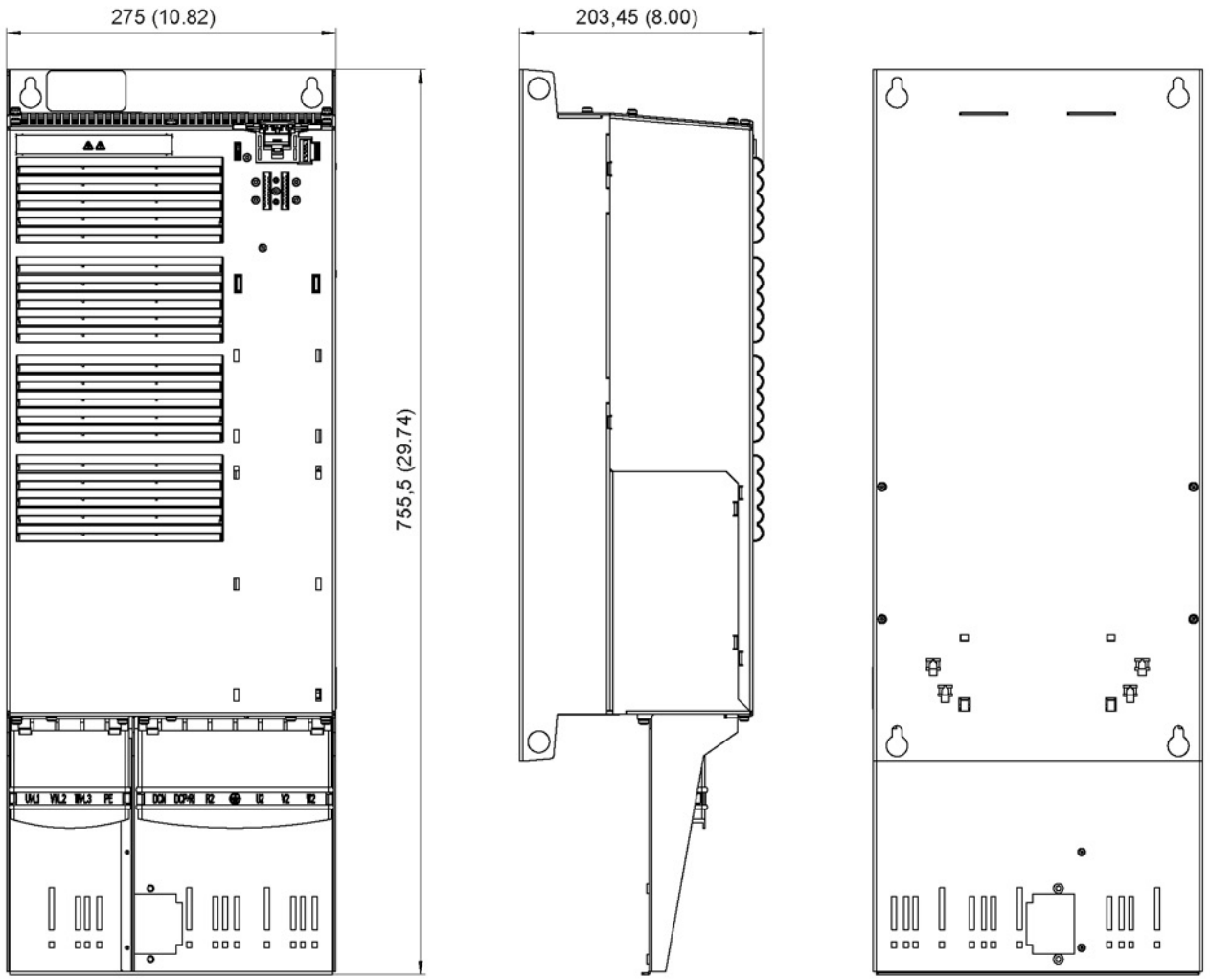

Figure 9-23 Dimension drawing of PM340 Power Module with shield connection kit, frame size FSE with integrated line filter, dimensions in mm (inches)

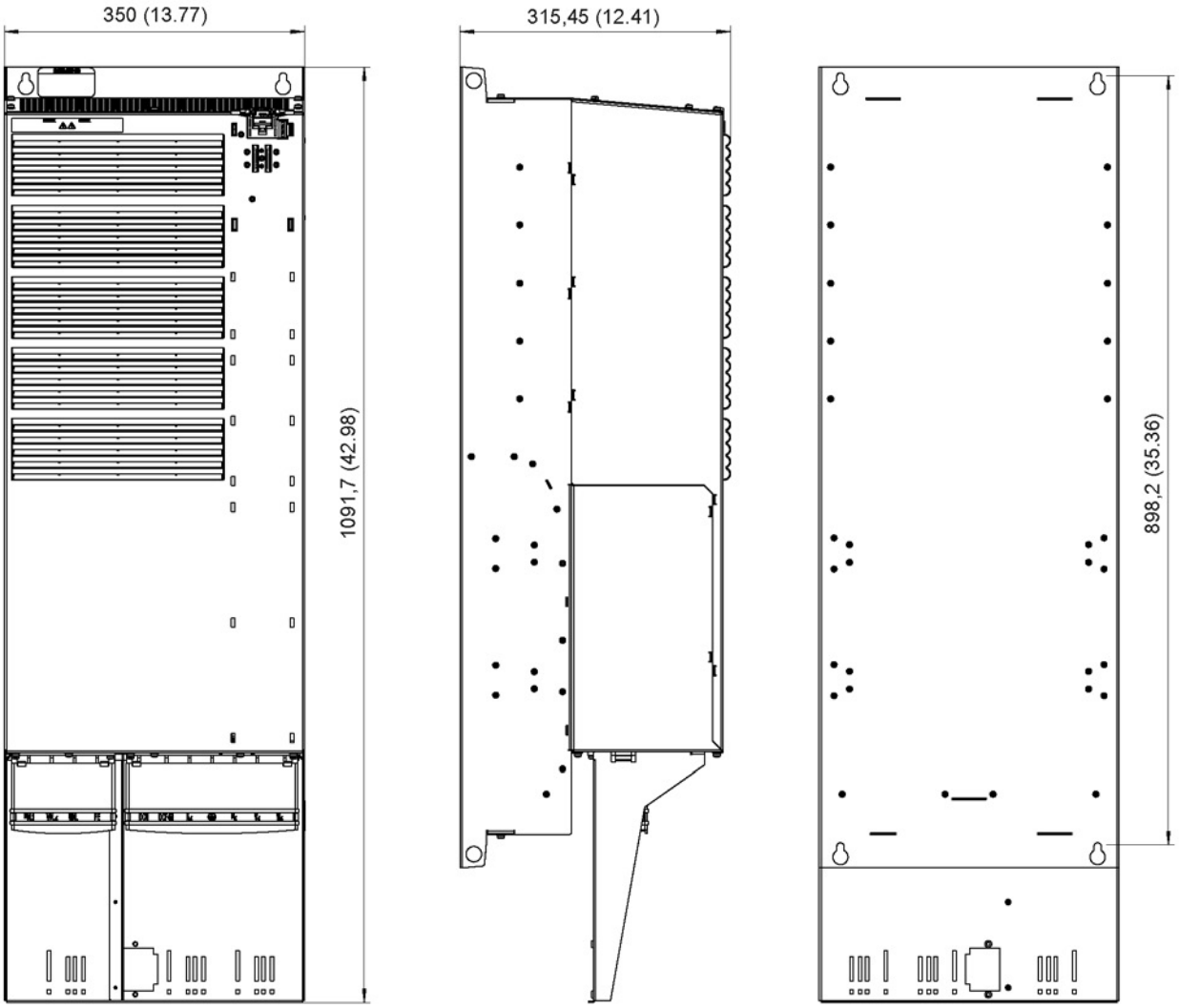

Figure 9-24 Dimension drawing of PM340 Power Module with shield connection kit, frame size FSF with integrated line filter, dimensions in mm (inches)

9.4.3 Mounting

9.4.3.1 PM340 Blocksize Power Modules

The diagrams show the mounting of shield connection kits on PM340 Power Modules with various frame sizes.

Frame size FSA

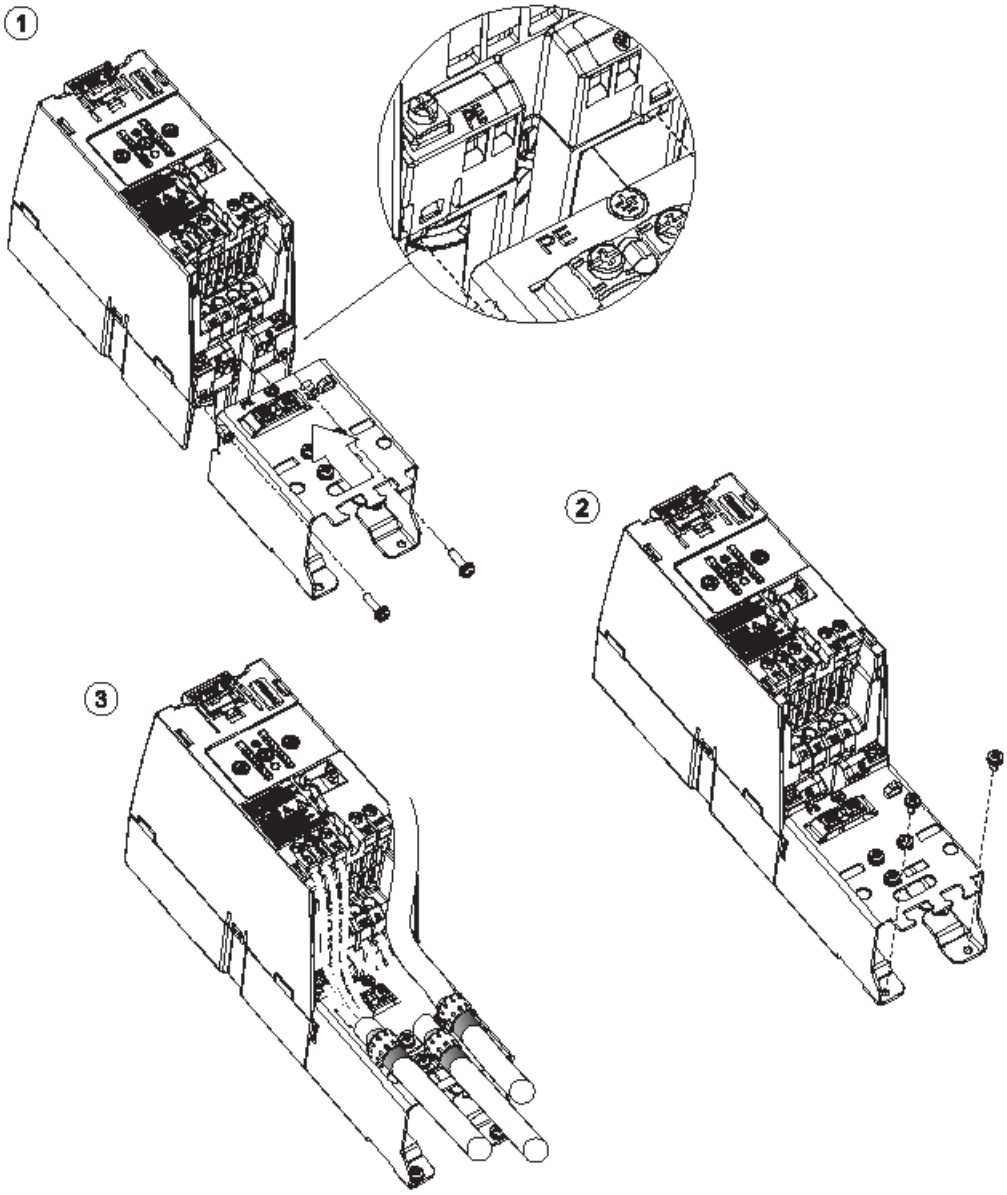

Figure 9-25 Mounting: Shield connection kit on PM340 Power Module (FSA)

Frame sizes FSB/FSC

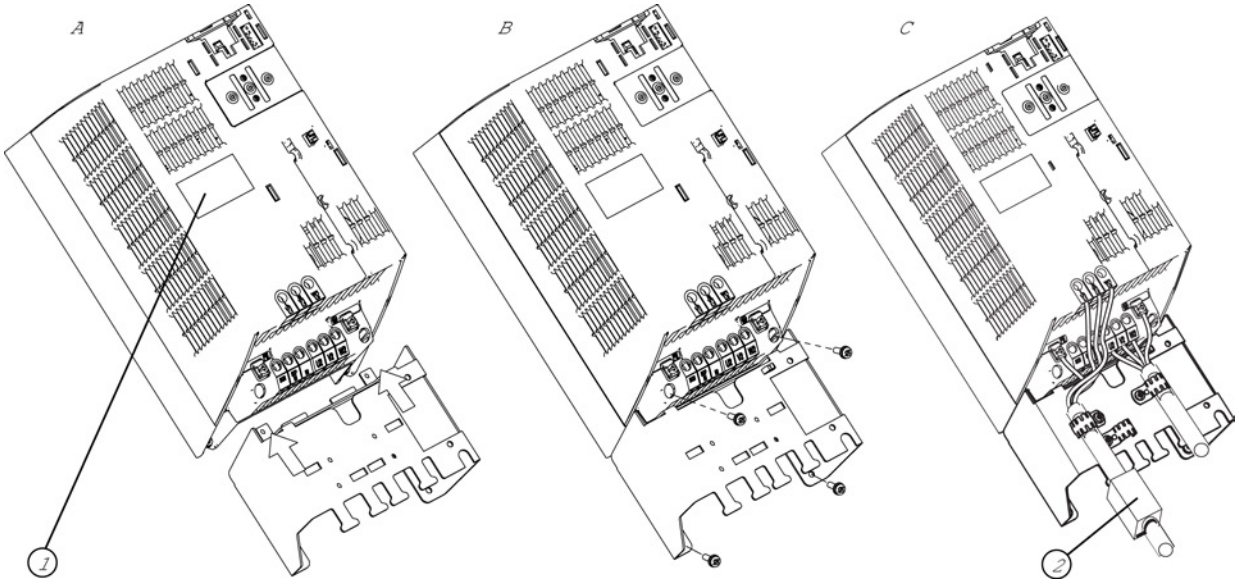

① Rating plate
② Ferrite core

Figure 9-26 Mounting: Shield connection kit and ferrite core on a PM340 Power Module (FSB / FSC)

Mounting the ferrite core

The ferrite core supplied should be attached to the line cable in order to dampen radio cable disturbances. The open ferrite core shown in the figure below is placed around the cable and snapped together in order to close it. The neck of the core (see the U-shaped collar in the figure below) enables the core to clamp onto the cable automatically, thus fixing it in position.

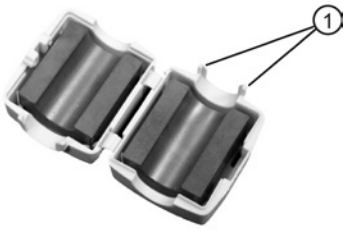

① Collar (U shape)

Figure 9-27 Ferrite core, open

If the core does not sit securely in position on the cable (due to the cable having a small diameter), a cable tie can be lashed tightly around the cable next to the closed ferrite core in order to prevent the ferrite from moving along the cable.

Frame sizes FSD/FSE

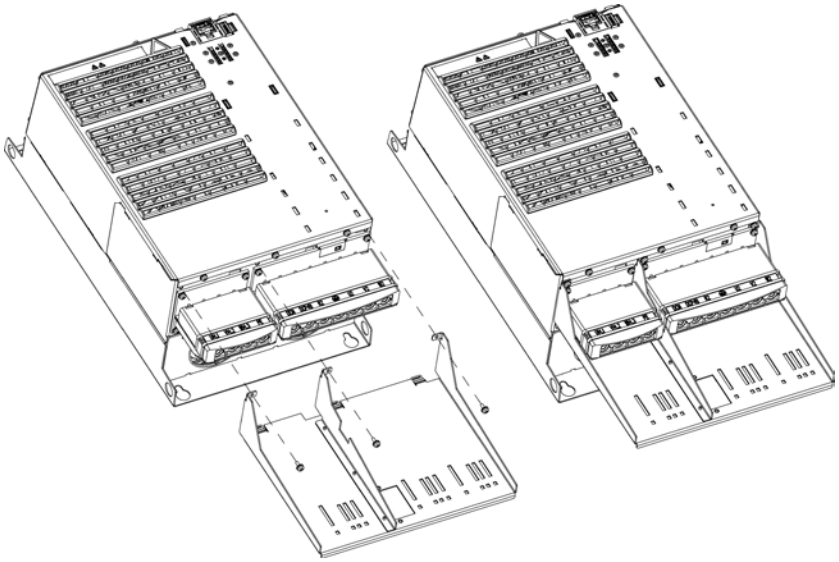

Figure 9-28 Mounting: Shield connection kit on PM340 Power Module PM340 (FSD/FSE)

Frame size FSF

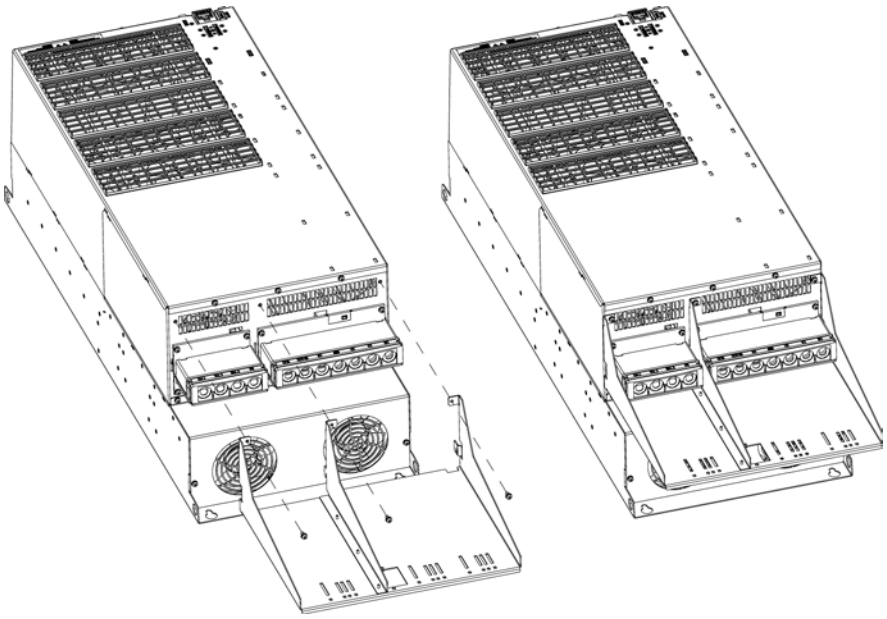

Figure 9-29 Mounting: Shield connection kit on PM340 Power Module (FSF)

9.4.3.2 Power cable connection

The diagram shows the connection of the power cables at the screening kit using the Power Module PM340, frame size FSD/FSE as an example.

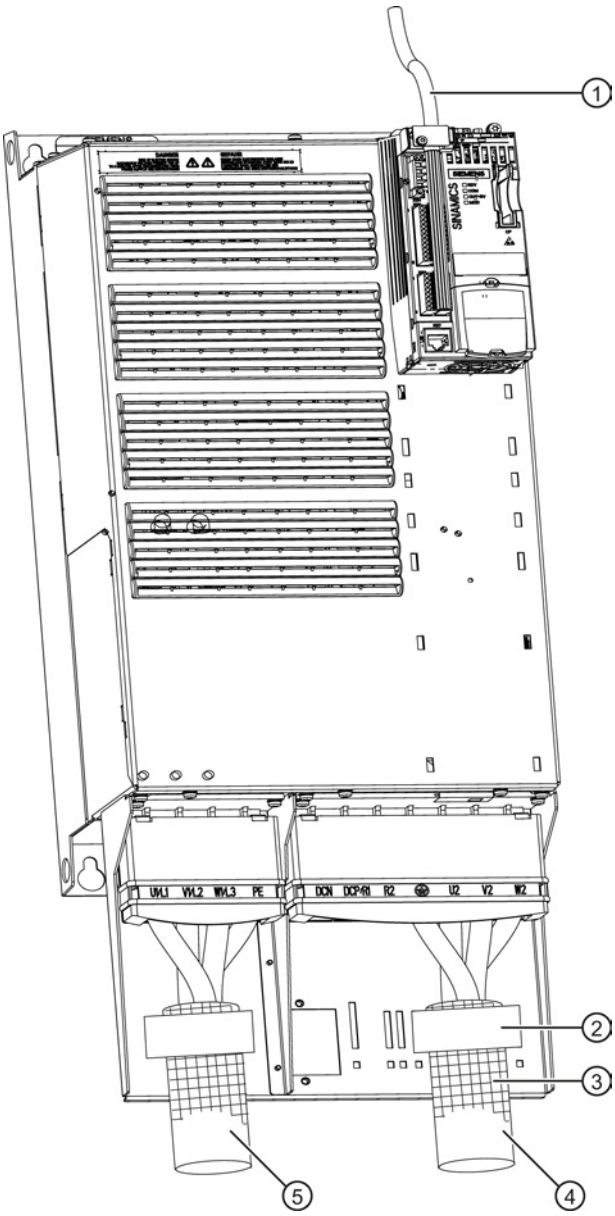

① Signal cable
② Mounting clip
③ Protective braided shield
④ Motor cable
⑤ Line supply cable

Figure 9-30 PM340 Power Module (frame size: FSD / FSE) with Control Unit and shield connection kit

Cabinet design and EMC for components, Blocksize format 10

10.1 General information

The SINAMICS S components are designed in accordance with degree of protection IPXXB according to EN 60529 and as open-type devices according to UL 50. This ensures protection against electric shock.
To also ensure protection against mechanical stress and climatic conditions, the components should only be operated in housing, cabinets or enclosed electrical operating areas that fulfill at least degree of protection IP54 and, as enclosure type 12, are designed according to UL 50.

Prefabricated MOTION-CONNECT cables are recommended.

Note

Functional safety of SINAMICS components

The components must be protected against conductive pollution, e.g. by installing them in a cabinet with degree of protection IP54 according to EN 60529.Provided conductive pollution can be prevented at the installation site, the degree of protection for the cabinet can be decreased accordingly.

Installation in a cabinet with degree of protection IP54 according to EN 60529 is advisable to ensure the safety functions of Safety Integrated are not compromised.

Low-voltage switchgear and controlgear assemblies

Part 1: Type-tested and partially type-tested low-voltage switchgear and controlgear assemblies

If the SINAMICS S drive line-up is used for the electrical equipment of machines, the applicable requirements of EN 60204-1 must also be adhered to.

Safety of machinery

Electrical equipment of machines

Part 1: General requirements

All information for device selection in this section applies to:

- Operation in a TN system
- Operating voltage range from 1-phase 200 VAC to 3-phase 440 VAC

10.2 Safety instructions for control panel manufacturing

WARNING

Danger to life if the fundamental safety instructions and residual risks are not observed

The non-observance of the fundamental safety instructions and residual risks stated in Chapter 1 can result in accidents with severe injuries or death.

- Observe the fundamental safety instructions.
- Consider the residual risks for the risk evaluation.

WARNING

Danger to life caused by high discharge currents when the external protective conductor is interrupted

Drive components conduct high discharge currents via the protective conductor. When the protective conductor is interrupted, touching live components can result in electric shock, which can lead to death or serious injuries.

- Ensure that the external protective conductor complies with at least one of the following conditions:
  - It is laid protected against mechanical damage.[1)]
  - For an individual core, it has a cross-section of at least 10 mm² Cu.
  - As core of a multi-core cable, it has a cross-section of at least 2.5 mm² Cu.
  - It has a parallel, second protective conductor with the same cross-section.
  - It corresponds to the local regulations for equipment with increased leakage current.

  [1)] Cables routed in control cabinets or enclosed machine enclosures are considered to be adequately protected against mechanical damage.

WARNING

Danger to life as a result of electric shock for incorrectly routed brake cables

When routing brake cables without safe electrical separation, the insulation can fail resulting in electric shock.

- Connect the holding brake using the MOTION-CONNECT cable intended for the purpose.
- Only use third-party cables that have brake cores with safe electrical separation or separately route the brake cores with safe electrical separation.

WARNING

Fire hazard due to overheating when permissible cable lengths are exceeded

Excessively long power cables can cause overheating of components with resulting fire and smoke development.

- The cable lengths (e.g. motor cable, DC-link cable) listed in the technical data must not be exceeded.

⚠ WARNING

Danger of injury caused by foreign objects in the device

Parts (e.g. drilling chips, end sleeves) falling into the device can cause short-circuits and damage the insulation. This can lead to serious injuries (arcing, bang, pieces flying out of the equipment).

- Only perform installation and other work when the devices are current-free.
- Cover the ventilation slits during the installation of the cabinet and remove the cover before switching on.

NOTICE

Damage due to use of incorrect coupling or cabinet bushings on DRIVE-CLiQ connections

Damage or malfunctions can occur on the devices or system if incorrect or unreleased couplings or cabinet bushings on DRIVE-CLiQ connections are used.

- Only use the DRIVE-CLiQ couplings and DRIVE-CLiQ cabinet bushings described in Chapter Accessories (Page 391).

10.3 Notes on electromagnetic compatibility (EMC)

Requirements to implement EMC are listed in EN 61000-6-2, EN 61000-6-4, EN 61800-3, EN 60204-1 and in the "EMC installation guideline" Configuration Manual (order number 6FC5297-0AD30-0xPx). Conformance with the EMC Directive of the EC can be ensured by following the measures described in the "EMC installation guideline" Configuration Manual. When mounting components in cabinets, in order to fulfill the EMC Directive, the following conditions must be additionally observed:

- Connected to TN or TT line supply systems with grounded neutral point
- SINAMICS line filter
- Observance of information about cable shielding and equipotential bonding
- Only the recommended Siemens power and signal cables are used
- Only cables from Siemens may be used for DRIVE-CLiQ connections

For MOTION-CONNECT cables, refer to catalog PM21

10.4 Cable shielding and routing

In order to comply with the EMC requirements, certain cables must be routed apart from other cables and from certain components. To full EMC requirements, the following cables must be used with shields:

- Power supply cables from line filter via line reactor to Power Module
- All motor cables (if necessary, including cables for motor holding brake)
- Cables for "fast inputs" of the Control Unit
- Cables for analog direct voltage/current signals
- Signal cables for sensors
- Cables for temperature sensors

Alternative measures (e.g. routing behind mounting plates, suitable clearances) can also be used provided they have similar results. This excludes measures that relate to the design, installation, and routing of motor power cables and signal cables. If unshielded cables are used between the line supply connection point and the line filter, make sure that no interfering cable is routed in parallel.

The cable shields must be connected as close to the conductor terminal connections as possible to ensure a low-impedance connection with cabinet ground.

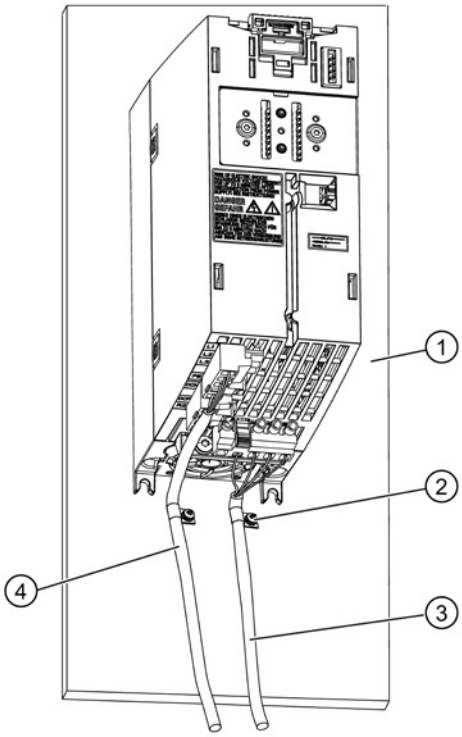

① Rear metal panel
② Clip to secure the shield of the motor and line cable to the rear metal panel
③ Motor cable (shielded)
④ Line supply input (shielded)

Figure 10-1 Shielding of a PM240-2 Power Module, frame size FSA

Alternatively, the cable shields can be connected to them metal mounting plate using pipe clamps and serrated rails. The cable length between the shield contact point and the terminals for cable conductors must be kept as short as possible.

Shield connection plates and shield connection kits with pre-prepared clip contacts are available for connecting the shields of power cables used for Power Modules.

All cables inside the cabinet must be connected as closely as possible to parts connected with cabinet ground, such as a mounting plate or cabinet wall. Ducts made of sheet steel or routing cables between between steel sheets (e.g. between the mounting plate and back wall) should provide adequate shielding.

Avoid, where possible, routing non-shielded cables, connected to the drive line-up, in the immediate vicinity of noise sources, e.g. transformers. Signal cables (shielded and unshielded) connected to the drive line-up must be laid at a great distance from strong external magnetic sources (e.g. transformers, line reactors). In both cases, a distance of ≥ 300 mm is usually sufficient.

Routing 24 V cables

When routing 24 V cables, the following must also be observed:

- A maximum of one conductor pair may be bundled together.
- 24 V conductors must be routed separately from other cables and conductors that could conduct the operating current.
- 24 V cables must never be routed parallel to power cables.
- 24 V cables as well as power cables should be routed to the components so that they never cover ventilation slots

Conditions of use for 24 V cables

- Ambient temperature 55 °C
- Limit conductor temperature, ≤ 70° C for operation with the rated load current
- Cable length max.:
  - 10 m for the 24 V supply cables
  - 30 m for signal lines without additional connections

10.5 24 V DC Supply Voltage

10.5.1 General

The 24 VDC voltage is required for the power supply:

1. The load voltage of the Control Unit digital outputs
   The Control Units are supplied with power via the PM-IF. 24 V must also be connected in the following cases:
   – Commissioning / diagnostics when the Power Module power supply is switched-out.
   – Using the digital outputs CU310-2
2. The electronics of Sensor Modules
3. The Safe Brake Relay (motor holding brakes)

Other loads can be connected to these power supply units if they are separately protected from overcurrent.

Note

The electronic power supply has to be supplied by the user as described in Chapter System data (Page 35).

When connecting to a "DC power supply" according to EN 60204-1:1997, Chapter 4.3.3, functional faults can occur due to the voltage interruptions that are permitted there.

NOTICE

Damage to further loads due to overvoltage

Overvoltage from switched inducted loads (contactors, relays) can damage connected loads.

- Install suitable overvoltage protection.

Note

Malfunction because 24 V supply voltage is too low

If the 24 V supply voltage falls short of the specified minimum value on a device in the assembly, a malfunction can occur.

- Select an input voltage that is high enough for there to be sufficient voltage on the last device. Do not exceed the maximum value for the supply voltage. If required, supply the voltage to the assembly at various locations.

Note

A regulated DC power supply is required to operate motors with a built-in holding brake. The power is supplied via the 24 V connection (Safe Brake Relay). The voltage tolerances of the motor holding brakes (24 V ±10%) and the voltage drops of the connecting cables must be taken into account.

The DC power supply should be set to 26 V. This ensures that the supply voltage for the brake remains within the permissible range when the following conditions are fulfilled:

- Use of Siemens three-phase motors
- Use of Siemens MOTION-CONNECT power cables
- Motor cable lengths: max. 100 m

10.5.2 Overcurrent protection

The cables on the primary and secondary sides of the 24 V power supply unit must be protected against overcurrent.

Primary side protection must be implemented according to the manufacturer's instructions.

Secondary side protection depends on the prevailing situation. Please note the following:

- Loading due to loads, including simultaneity factor depending on machine operation
- Current carrying capacity of the conductors used and cables in normal and short-circuit conditions
- Ambient temperature
- Cable bundling (routing cables in a common duct)
- Cable routing method according to EN 60204-1

The overcurrent protection devices can be determined according to EN 60204-1, Section 14.

Circuit-breakers from Siemens Catalogs LV 1 and LV 1T are recommended as overcurrent protection devices on the primary side.
Miniature circuit-breakers or SITOP select, 6EP1961-2BA00 are recommended as overcurrent protection devices on the secondary side. The miniature circuit-breakers can also be selected from Siemens LV 1 and LV 1T Catalogs.

Miniature circuit-breakers are recommended as overcurrent protection devices for the cables and busbars. The ground potential M must be connected to the protective conductor system (PELV / SELV).

When selecting the miniature circuit-breaker, local installation regulations must be carefully complied with.

Table 10- 1 MCBs by conductor cross-section and temperature

Conductor cross-section	Max. value up to 40° C	Max. value up to 55° C
1.5 mm^2	10 A	6 A
2.5 mm^2	16 A	10 A
4 mm^2	25 A	16 A
6 mm^2	32 A	20 A

The tripping characteristic of the circuit-breaker is selected so that loads remain protected against the maximum current that occurs in the event of a short circuit of the power supply unit.

10.5.3 Overvoltage protection

Overvoltage protection devices are needed if long cables are used.

- Supply cables > 10 m
- Signal cables > 30 m

The following Weidmüller overvoltage protectors are recommended for protecting the components' 24 V power supply and the 24 V signal cables from overvoltage:

Table 10- 2 Recommendations for overvoltage protection

DC power supply	24 V signal cables
Weidmüller Item no.: PU III R 24V Order number: 8860360000	Weidmüller Item no.: MCZ OVP TAZ Order number: 844915 0000

The overvoltage protectors must always be placed next to the area to be protected, e.g. at the entry point to the control cabinet.

10.5.4 Typical 24 V current consumption of the components

A separate 24 V power supply must be used for the SINAMICS S120 drive line-up.

The following table can be used to calculate the 24 VDC power supply. The values for typical current consumption are used as a basis for configuration.

Table 10- 3 Overview of 24 VDC current consumption

Component	Typical current consumption [A_{DC}]
Control Units and Control Unit Adapters	
CU310-2 DP without load For each digital output	0,8 0,1
CU310-2 PN without load For each digital output	0,8 0,1
CUA31 without DRIVE-CLiQ	0,15
CUA32 without DRIVE-CLiQ or encoder Encoder (max.)	0,15 0,4
DRIVE-CLiQ and brake	
DRIVE-CLiQ (e.g. motors with DRIVE-CLiQ interface)	0,19
Brake (e.g. motor holding brake)	Typical 0.4 to 1.1; max. 2
Sensor Module Cabinet	
SMC10 without/with encoder system	0,20 / 0,35
SMC20 without/with encoder system	0,20 / 0,35
SMC30 without/with encoder system	0,20 / 0,55
Sensor Module External	
SME20 without/with encoder system	0,15 / 0,25
SME25 without/with encoder system	0,15 / 0,25
SME120 without/with encoder system	0,20 / 0,30
SME125 without/with encoder system	0,20 / 0,30

10.5.5 Selecting power supply units

You are advised to use the devices in the following table. These devices meet the applicable requirements of EN 60204-1.

Table 10- 4 Recommended SITOP Power

Rated output current [A]	Phases	Rated input voltage [V] Operating voltage range [V]	Short-circuit current [A]	Order number
5	1 / 2	AC 120 … 230 / 230 … 500 85 … 264 / 176 … 550	Approx. 5.5 (power up) Typ. 15 for 25 ms (operation)	6EP1333-3BA00-8AC0
10	1 / 2	AC 120 … 230 / 230 … 500 85 … 264 / 176 … 550	Approx. 12 (power up) Typ. 30 for 25 ms (operation)	6EP1334-3BA00-8AB0
20	1 / 2	AC 120 / 230 85 … 132 / 176 … 264	Approx. 23 (power up) Typ. 60 for 25 ms (operation)	6EP1336-3BA00-8AA0
	3	3 AC 230 / 400 … 288 / 500 320 … 550		6EP1436-3BA00-8AA0
40	1 / 2	AC 120 / 230 85 … 132 / 176 … 264	Approx. 46 (power up) Typ. 120 for 25 ms (operation)	6EP1337-3BA00-8AA0
	3	3 AC 230 / 400 … 288 / 500 320 … 550		6EP1437-3BA00-8AA0

Table 10- 5 Recommendation for Control Supply Module

Rated output current [A]		Input voltage range [V]	Short-circuit current [A]	Order number
20	3	380 V 3 AC -10 % (-15 % < 1 min) to 480 V 3 AC +10% DC 300 … 800	< 24	6SL3100-1DE22-0AAx

Refer also to Catalog PM21 or NC61.

WARNING

Danger to life through a hazardous voltage when connecting an unsuitable power supply

Touching live components can result in death or severe injury.

- Connect the ground potential to the protective conductor connection.
- Mount the power supply close to the drive lineup.

  Ideally, they should be mounted on a common mounting plate. If different mounting plates are used, their electrical interconnection must comply with the EMC installation guideline.

10.6 Connection Methods

10.6.1 DRIVE-CLiQ signal cables

10.6.1.1 Overview

To connect DRIVE-CLiQ components, various pre-assembled and non-assembled DRIVE-CLiQ signal cables are available. The following pre-assembled DRIVE-CLiQ signal cables will be discussed in more detail in the next sections:

- Signal cables without 24 V cores with RJ45 connectors
- MOTION-CONNECT signal cables with DRIVE-CLiQ connectors
- MOTION-CONNECT signal cables with DRIVE-CLiQ connector and M12 socket

Table 10- 6 Overview of pre-assembled DRIVE-CLiQ signal cables

Type of DRIVE-CLiQ signal cable	24 V cores	Degree of protection		Connector type
		IP20	IP67	
6SL3060-4A.. 6FX2002-1DC..	--	x	x	RJ45
6FX5002-2DC00.. to .. -2DC20.. 6FX8002-2DC00.. to .. -2DC20..	x	x	x	DRIVE-CLiQ
6FX5002-2DC30.. 6FX8002-2DC30..	x	X (DRIVE-CLiQ)	X (M12)	DRIVE-CLiQ / M12

10.6.1.2 DRIVE-CLiQ signal cables without 24 V DC cores

Pre-assembled DRIVE-CLiQ signal cables without 24 V DC cores are used to connect components with DRIVE-CLiQ connection, which have a separate or external 24 V DC power supply. They are mainly intended for use in control cabinets. The signal cables are available with RJ45 connectors in degrees of protection IP20 and IP67.

Table 10- 7 Actual cable lengths of DRIVE-CLiQ bridges

DRIVE-CLiQ bridge	Cable length L [1]
50 mm	110 mm
100 mm	160 mm
150 mm	210 mm
200 mm	260 mm
250 mm	310 mm
300 mm	360 mm
350 mm	410 mm

[1] Cable length without connector

Cable lengths from 600 mm and higher are used to connect to other applications (e.g. establish a 2nd line in the drive line-up, establish wiring in a star configuration etc.)

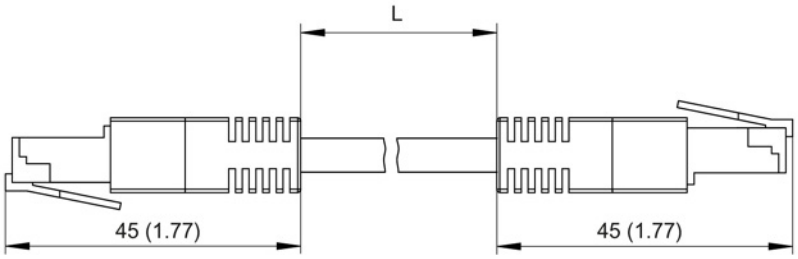

Figure 10-2 DRIVE-CLiQ signal cables without 24 V DC cores (IP20)

10.6.1.3 DRIVE-CLiQ signal cables MOTION-CONNECT with DRIVE-CLiQ connectors

The MOTION-CONNECT DRIVE-CLiQ signal cables with DRIVE-CLiQ connectors have 24 V DC cores. They are used for components with DRIVE-CLiQ connection if higher requirements must be complied with, such as mechanical stress and resistance to oil. For example, the signal cables are used for connections outside the control cabinet

The maximum length of the DRIVE-CLiQ MOTION-CONNECT signal cables with DRIVE-CLiQ connectors is:

- 100 m for MOTION-CONNECT 500 cables
- 75 m for MOTION-CONNECT 800PLUS cables

The signal cables are available in degrees of protection IP20 and IP67.

Note

DRIVE-CLiQ cabinet bushing for DRIVE-CLiQ connectors

For information about the cabinet bushing, see DRIVE-CLiQ cabinet bushing (Page 391).

10.6.1.4 MOTION-CONNECT DRIVE-CLiQ signal cables with DRIVE-CLiQ connector and M12 socket

The MOTION-CONNECT DRIVE-CLiQ signal cables with DRIVE-CLiQ connector and M12 socket have 24 V DC cores. They establish the connection between components with a DRIVE-CLiQ connection and a direct measuring system equipped with DRIVE-CLiQ ASIC with 8-pin M12 connector. Measuring systems from third-party manufacturers can be directly connected to the SINAMICS S120.

Basic cable

The pre-assembled basic cable has eight cores, of which four are used for data transmission and two for the 24 V supply. It is used to convert from a DRIVE-CLiQ connector (IP20) to an M12 socket (IP67).

Figure 10-3 DRIVE-CLiQ basic cable with DRIVE-CLiQ connector and M12 socket

Extension

The pre-assembled extension of a basic cable has an M12 plug (IP67) and an M12 socket (IP67).

Figure 10-4 DRIVE-CLiQ extension with M12 plug and M12 socket

---

Note

Maximum number of extensions

A maximum of two extensions can be used. More than two extensions can result in data transfer errors.

Note

Maximum permissible total cable length

The maximum permissible total cable length between the measuring system and the DRIVE-CLiQ socket of the SINAMICS S120 device is 30 m. For a longer total cable length, data transfer errors may occur. This is the reason that no additional extension can be connected to a 30 m long basic cable.

Note

DRIVE-CLiQ cabinet bushing with M12 plug

For information about the cabinet bushing, see DRIVE-CLiQ cabinet bushing (Page 391).

10.6.1.5 Comparison of DRIVE-CLiQ signal cables

DRIVE-CLiQ signal cables are designed for various applications. The following table provides an overview of the most important properties.

Table 10- 8 Properties of DRIVE-CLiQ signal cables

DRIVE-CLiQ signal cable	DRIVE-CLiQ	DRIVE-CLiQ MOTION-CONNECT 500	DRIVE-CLiQ MOTION-CONNECT 800PLUS
Approvals			
VDE cURus or UR/CSA UR-CSA File No.[1)] in conformance with RoHS	Yes UL STYLE 2502/CSA-N.210.2-M90 Yes Yes	Yes UL STYLE 2502/CSA-N.210.2-M90 Yes Yes	Yes UL STYLE 2502/CSA-N.210.2-M90 Yes Yes
Rated voltage V_0/V in accordance with EN 50395	30 V	30 V	30 V
Test voltage, rms	500 V	500 V	500 V
Operating temperature at the surface			
Permanently installed Moveable	-20 … +80 °C -	-20 … +80 °C 0 … 60 °C	-20 … +80 °C -20 … +60 °C
Tensile load, max.			
Permanently installed Moveable	45 N/mm² –	80 N/mm² 30 N/mm²	50 N/mm² 20 N/mm²
Smallest bending radius			
Permanently installed Moveable	50 mm -	35 mm 125 mm	35 mm 75 mm
Torsional stress	-	30°/m absolute	30°/m absolute
Bending operations	-	100000	10 million
Max. moving speed	-	30 m/min	300 m/min
Max. acceleration	-	2 m/s²	50 m/s² (3 m distance moved through)[2)]
insulation material	CFC/silicone-free	CFC/silicone-free	CFC/halogen/silicone-free IEC 60754-1 / DIN VDE 0472-815
Oil resistance	EN 60811-2-1	EN 60811-2-1 (mineral oil only)	EN 60811-2-1
Protective jacket	PVC Gray RAL 7032	PVC DESINA color green RAL 6018	PUR, HD22.10 S2 (VDE 0282, Part 10) DESINA color green, RAL 6018
Flame retardant	EN 60332-1-1 to 1-3	EN 60332-1-1 to 1-3	EN 60332-1-1 to 1-3

1) The file number is printed on the cable jacket.

2) Characteristic curves for accelerating can be found in Catalog "D31" in Chapter "MOTION-CONNECT connection system".

10.6.1.6 Combined use of MOTION-CONNECT 500 and MOTION-CONNECT 800PLUS

In principle, MOTION-CONNECT 500 cables and MOTION-CONNECT 800PLUS cables be used together.

Basic cables and extensions for MOTION-CONNECT cables with DRIVE-CLiQ connector and M12 socket can be combined without any restrictions.

For the combined use of MOTION-CONNECT cables with DRIVE-CLiQ connectors, the conditions below apply.

Use of DRIVE-CLiQ couplings

DRIVE-CLiQ couplings are used to combine MOTION-CONNECT 500 cables and MOTION-CONNECT 800PLUS cables with DRIVE-CLiQ connectors. The maximum permissible cable length is calculated as follows:

$\Sigma MC500 + 4/3 * \Sigma MC800PLUS + n_c * 5\ m \leq 100\ m$

ΣMC500: Total length of all MC500 cable segments (fixed routing)

ΣMC800PLUS: Total length of all MC800PLUS cable segments (tow chain)

n_c: Number of DRIVE-CLiQ couplings (0 to max. of 3)

With this combination, DRIVE-CLiQ cables with a maximum length of over 75 m can also implemented for applications involving a tow chain.

Table 10- 9 Examples of maximum cable lengths when using a DRIVE-CLiQ coupling

ΣMC500 (fixed routing)	87 m	80 m	66 m	54 m	40 m	30 m	20 m	10 m	5 m
ΣMC800PLUS (tow chain)	5 m	10 m	20 m	30 m	40 m	48 m	55 m	63 m	66 m
ΣMC500+ ΣMC800PLUS	92 m	90 m	86 m	84 m	80 m	78 m	75 m	73 m	71 m

Using a DRIVE CLiQ Hub Module

A DRIVE-CLiQ Hub Module (DMC20 or DME20) can be used to double the maximum permissible cable length for MOTION-CONNECT cables with DRIVE-CLiQ connectors. After the hub, the same length conditions apply as before the hub.

$\Sigma MC500 + 4/3 * \Sigma MC800PLUS + n_c * 5\ m \leq 100\ m$ before the hub

$\Sigma MC500 + 4/3 * \Sigma MC800PLUS + n_c * 5\ m \leq 100\ m$ after the hub

It is possible to connect two DRIVE-CLiQ Hub Modules in series (cascade connection).

10.6.2 Power cables for motors

10.6.2.1 Configuring the cable length

Where a longer motor cable is required, a higher rating of Power Module must be selected or the permissible continuous output current $I_{continuous}$ must be reduced in relation to the rated output current I_{rated}. The following configuration applies to Power Modules Blocksize:

Table 10- 10 Permissible cable lengths for shielded motor cables

PM340 Power Module	Length of the MOTION-CONNECT motor cable (shielded)			
Rated output current I_{rated}	> 50 … 100 m	> 100 … 150 m	> 150 … 200 m	>200 m
1.3 A 1.7 A 2.2 A 3.1 A 4.1 A	Not permissible	Not permissible	Not permissible	Not permissible
5.9 A 7.7 A	$I_{max} \leq 1.1 \times I_{rated}$ $I_{continuous} \leq 0.6 \times I_{rated}$	Not permissible	Not permissible	Not permissible
10.2 A	$I_{max} \leq 1.2 \times I_{rated}$ $I_{continuous} \leq 0.7 \times I_{rated}$	Not permissible	Not permissible	Not permissible
18 A	$I_{max} \leq 1.2 \times I_{rated}$ $I_{continuous} \leq 0.7 \times I_{rated}$	$I_{max} \leq 0.7 \times I_{rated}$ $I_{continuous} \leq 0.45 \times I_{rated}$	Not permissible	Not permissible
25 A 32 A	$I_{max} \leq 1.5 \times I_{rated}$ $I_{continuous} \leq 0.9 \times I_{rated}$	$I_{max} \leq 1.3 \times I_{rated}$ $I_{continuous} \leq 0.8 \times I_{rated}$	Not permissible	Not permissible
38 A 45 A 60 A	$I_{max} \leq 1.6 \times I_{rated}$ $I_{continuous} \leq 0.95 \times I_{rated}$ 1)	$I_{max} \leq 1.5 \times I_{rated}$ $I_{continuous} \leq 0.9 \times I_{rated}$	$I_{max} \leq 1.4 \times I_{rated}$ $I_{continuous} \leq 0.85 \times I_{rated}$	Not permissible
75 A 90 A	Always permissible	$I_{max} \leq 1.6 \times I_{rated}$ $I_{continuous} \leq 0.95 \times I_{rated}$	$I_{max} \leq 1.5 \times I_{rated}$ $I_{continuous} \leq 0.9 \times I_{rated}$	Not permissible
110 A 145 A 178 A	Always permissible	Not permissible	Not permissible	Not permissible

1) Up to 70 m, always permissible

The permissible cable length for an unshielded motor cable is 150% of the length for a shielded motor cable.

Motor reactors can also be installed in order to permit the use of longer motor cables.

10.6.2.2 Comparison of MOTION-CONNECT power cables

MOTION-CONNECT 500 power cables are mainly suitable for permanent routing. MOTION-CONNECT 800PLUS power cables fulfill all of the high mechanical requirements for use in tow chains. They are resistant to cutting oils.

Table 10- 11 Comparison of the MOTION-CONNECT 500 and MOTION-CONNECT 800PLUS power cables

Power cable	MOTION-CONNECT 500	MOTION-CONNECT 800PLUS
Approvals		
VDE [1)] cURus or UR/CSA UR-CSA File No. [2)] in conformance with RoHS	Yes UL758-CSA-C22.2-N.210.2-M90 Yes Yes	Yes UL758-CSA-C22.2-N.210.2-M90 Yes Yes
Rated voltage V_0/V in accordance with EN 50395		
Supply cores Signal cores	600 V / 1000 V 24 V (EN) 1000 V (UL/CSA)	600 V / 1000 V 24 V (EN) 1000 V (UL/CSA)
Test voltage, rms		
Supply cores Signal cores	4 kV 2 kV	4 kV 2 kV
Operating temperature at the surface		
Permanently installed Moveable	-20 … 80 °C 0 … 60 °C	-50 … 80 °C -20 … 60 °C
Tensile load, max.		
Permanently installed Moveable	50 N/mm^2 20 N/mm^2	50 N/mm^2 20 N/mm^2
Smallest bending radius		
Permanently routed Moving [3)]	5 x D_{max} approx. 18 x D_{max}	4 x D_{max} approx. 8 x D_{max}
Torsional stress	30°/m absolute	30°/m absolute
Bending operations	100000	10 million From 10 mm^2: 3 million
Max. traversing speed	30 m/min	Up to 300 m/min
Max. acceleration	2 m/s^2	50 m/s^2 (3 m) [4)]
insulation material	CFC/silicone-free	CFC/halogen/silicone-free IEC 60754-1 / DIN VDE 0472-815
Oil resistance	EN 60811-2-1 (mineral oil only)	EN 60811-2-1
Protective jacket	PVC DESINA color, orange RAL 2003	PUR, HD22.10 S2 (VDE 0282, Part 10) DESINA color, orange, RAL 2003
Flame retardant	EN 60332-1-1 to 1-3	EN 60332-1-1 to 1-3

1) The registration number is printed on the cable jacket.

2) The file number is printed on the cable jacket.

3) Detailed information on D_{max} as well as the lowest permissible bending radius are provided in Catalog D31 in Chapter "Connection system MOTION-CONNECT."

4) Characteristic curves for accelerating can be found in Catalog D31 in Chapter "MOTION-CONNECT connection system."

10.6.3 Current-carrying capacity and derating factors for power cables and signal cables

The current-carrying capacity of PVC/PUR-insulated copper cables is specified for routing types B1, B2 and C under continuous operating conditions in the table with reference to an ambient air temperature of 40 °C. For other ambient temperatures, the values must be corrected by the factors listed in the "Derating factors for deviating ambient temperatures" table.

Table 10- 12 Current carrying capacity according to EN 60204-1 for 40 °C ambient temperature

Cross-section	Current carrying capacity, effective; AC 50/60 Hz or DC For routing type		
mm²	B1 A	B2 A	C A
Electronics			
0,20	–	4,3	4,4
0,50	–	7,5	7,5
0,75	–	9	9,5
Power			
0,75	8,6	8,5	9,8
1,00	10,3	10,1	11,7
1,50	13,5	13,1	15,2
2,50	18,3	17,4	21
4	24	23	28
6	31	30	36
10	44	40	50
16	59	54	66
25	77	70	84
35	96	86	104
50	117	103	125
70	149	130	160
95	180	165	194
120	208	179	225

Table 10- 13 Current carrying capacity according to IEC 60364-5-52 for 40 °C ambient temperature

Cross-section	Current carrying capacity, effective; AC 50/60 Hz or DC For routing type		
Power			
150	–	–	344
185	–	–	392
> 185	Values must be taken from the standard		

Routing types

B1 Cables in conduits or installation ducts

B2 Multi-core cables in conduits or installation ducts

C Cables along walls/panels, without conduits or installation ducts

Table 10- 14 Derating factors for deviating ambient temperatures

Ambient air temperature [°C]	Derating factor according to EN 60204-1, Table D1
30	1,15
35	1,08
40	1,00
45	0,91
50	0,82
55	0,71
60	0,58

10.6.4 Spring-loaded terminals

Table 10- 15 Spring-loaded terminals

Spring-loaded terminal type			
1	Connectable cable cross-sections	Rigid Flexible Flexible with end sleeve without plastic sleeve Flexible with end sleeve with plastic sleeve AWG/kcmil	0.2 … 1.5 mm^2 0.2 … 1.5 mm^2 0.25 … 1.5 mm^2 0.25 … 0.75 mm^2 24 … 16
	Insulation stripping length	10 mm	
	Tool	Screwdriver 0.4 x 2.0 mm	

10.6.5 Screw terminals

Connectable conductor cross-sections of screw terminals

The type of screw terminal can be taken from the interface description of the particular component.

Table 10- 16 Screw terminals

Screw terminal type			
1	Connectable cable cross-sections	Flexible With end sleeve, without plastic sleeve With end sleeve, with plastic sleeve	0.14 … 1.5 mm^2 0.25 … 1.5 mm^2 0.25 … 0.5 mm^2
	Insulation stripping length	7 mm	
	Tool	Screwdriver 0.4 x 2.0 mm	
	Tightening torque	0.22 … 0.25 Nm	
2	Connectable cable cross-sections	Rigid, flexible With end sleeve, without plastic sleeve With end sleeve, with plastic sleeve AWG / kcmil	0.2 … 2.5 mm^2 0.2 … 2.5 mm^2 0.2 … 1.5 mm^2 22 … 12
	Insulation stripping length	6 … 7 mm	
	Tool	Screwdriver 0.5 x 3 mm	
	Tightening torque	0.4 … 0.5 Nm	

10.7 Protective connection and equipotential bonding

Protective connections

The SINAMICS S drive system is designed for use in cabinets with a protective conductor connection.

The protective conductor connection of the SINAMICS components must be connected to the protective conductor connection of the control cabinet as follows:

Table 10- 17 Conductor cross-section for copper protective connections

Line supply cable in mm²	Copper protective connection in mm²
Up to 16 mm²	The same as the line supply cable
From 16 … 35 mm [2)]	16 mm²
From 35 mm²	0.5 x line supply cable

For materials other than copper, the cross-section should be increased so that as a minimum, the same conductivity is attained.

All system components and machine parts must be incorporated in the protection concept.

The protective connection (PE connection) of the motors used must be established through the motor cable. For EMC reasons, the shield of the motor cable should be connected through a large surface area both at the Power Module as well as at the motor.

The drive line-up must be arranged on a common bright mounting plate in order to comply with the EMC limit values. The mounting plate must be connected to the protective conductor connection of the control cabinet through a low impedance.

Copper cables with appropriate cross-sections (>2.5 mm²) must be used for the protective connections of the PROFIBUS nodes.

For more information about grounding PROFIBUS, see:
http://www.profibus.com/fileadmin/media/wbt/WBT_Assembly_V10_Dec06/index.html

Functional equipotential bonding

A mounting plate, which is connected with the protective conductor connection of the control cabinet through a low impedance connection, simultaneously serves as the functional equipotential bonding surface. This means that no additional functional equipotential bonding is required within the drive line-up.

If a common bright mounting plate is not available, then equally good functional equipotential bonding must be established using cable cross-sections as listed in the table above or, as a minimum, with the same conductivity.

When installing components on standard mounting rails, the data listed in the table also apply to the functional equipotential bonding. If only smaller connection cross-sections are permissible at the components, then the largest possible cross-section should be used, e.g. 6 mm² for SMC. These requirements also apply to distributed components located outside the control cabinet.

NOTICE

Component destruction as a result of high leakage currents

The Control Unit or other PROFIBUS and/or PROFINET nodes can be destroyed, if significant leakage currents flow via the PROFIBUS or PROFINET cable.

- Use a functional equipotential bonding conductor with a cross-section of at least 25 mm² between components of a plant or system that are located at a distance from each other.

No functional equipotential bonding conductors are required for PROFIBUS inside a control cabinet. For PROFIBUS connections between different buildings or parts of buildings, a functional equipotential bonding must be routed in parallel to the PROFIBUS cable. The following cross-sections must be observed in accordance with IEC 60364-5-54:

- Copper 6 mm²
- Aluminum 16 mm²
- Steel 50 mm²

Additional information about equipotential bonding for PROFIBUS can be found at:
http://www.profibus.com/fileadmin/media/wbt/WBT_Assembly_V10_Dec06/index.html

Note

Non-observance of the above guidelines on functional equipotential bonding can lead to faults on the fieldbus interfaces or to malfunction of the devices.

Note

PROFINET

For installation guidelines and information of protective grounding and equipotential bonding for all PROFINET types and topologies, refer to DOWNLOADS at:
http://www.profibus.com

10.8 Arrangement of components and equipment

10.8.1 General

The arrangement of the components and equipment takes account of:

- Space requirements
- Cable routing
- Bending radiuses of the connecting cables
  MOTION-CONNECT cables, refer to catalog PM21
- Heat dissipation
- EMC

Components are usually located centrally in a cabinet.

Always observe the mounting clearances necessary above and below the components.

10.8.2 Mounting

The components should be mounted on a conductive mounting surface to ensure low impedance between the component and the mounting surface. Mounting plates with a galvanized surface are suitable.

Figure 10-5 Mounting the CU310-2 onto a Power Module PM340 (frame size FSD)

Installation of PM340 Power Modules with base components

Many system components are designed as base components for PM340 Power Modules in frame sizes FSA to FSE. In such cases, the base component is mounted on the mounting surface and the PM340 Power Module in front of it, in order to save space.

Table 10- 18 Available base components

	FSA	FSB	FSC	FSD	FSE
Line filter	x	-	-	-	-
Line reactor	x	x	x	x	x
Brake resistor	x	x			
Motor reactor	x	x	x		

x: base mounting possible

-: Not available as an external component (use a Power Module with an integrated line filter)

Up to two base components can be mounted in front of one another. For configurations involving more than two base-type components (e.g. line reactor + motor reactor + braking resistor), the individual components must be mounted to the side of the Power Module.

In the case of the PM340 Power Modules of frame size FSA to FSC, installation must be performed in the following sequence:

Table 10- 19 Mounting sequence for base components, starting from the wall of the control cabinet

Frame size	Mounting sequence
FSA	**Without external line filter:** Motor reactor - line reactor - PM340
	With external line filter: Line reactor - line filter - PM340 or Motor reactor - line filter - PM340
FSB	Motor reactor - line reactor - PM340
FSC	Motor reactor - line reactor - PM340

Note

Mounting brake resistors

Brake resistors for Power Modules should be mounted next to the Power module or outside the control cabinet as a result of the high level of heat generated.

Wiring rules for DRIVE-CLiQ

Further information may be found in the: SINAMICS Commissioning Manual.

10.9 Information on control cabinet cooling

10.9.1 General

Electrical cabinets can be cooled, using among other things with the following:

- filtered fans
- heat exchangers or
- cooling units.

The decision in favor of one of these methods depends on the prevailing ambient conditions and the cooling power required.

The air routing inside the control cabinet and the ventilation clearances specified here, must be carefully observed. Other components or cables must not be installed/routed in these areas.

You must comply with the following specifications when installing SINAMICS components:

- Cooling clearance
- Cable routing
- Air guidance, air-conditioner

Table 10- 20 Ventilation clearances around the components

Component	Clearance above and below in mm and (inches)	Lateral clearance in mm and (inches)	Clearance in front of the component
CU310-2 DP	50 (1.97)		
CU310-2 PN	50 (1.97)		
CUA31	50 (1.97)		
SMCxx	50 (1.97)		
Line filter	100 (3.93)		
Line reactor	100 (3.93)		
PM240-2 Blocksize, frame size FSA … FSC	Above: 80 (3.15) Below: 100 (3.93)	1 (0,04)	
PM340 Blocksize, frame size FSA	100 (3.93)	30 (1.18)[1)]	
PM340 Blocksize, frame size FSB	100 (3.93)	40 (1.57)[1)]	30 (1.18)
PM340 Blocksize, frame size FSC	125 (4.92)	50 (1.97)[1)]	30 (1.18)
PM340 Blocksize, frame sizes FSD and FSE	300 (11.81)		30 (1.18)
PM340 Blocksize, frame size FSF	350 (13.77)		30 (1.18)

1) The PM340 Power Modules can be mounted side by side without base components up to an ambient temperature of 40° C. In combination with base components and at ambient temperatures of 40° C to 55° C, the specified lateral minimum clearances must be observed. Where combinations of different frame sizes are concerned, the longer of the two clearances shall apply.

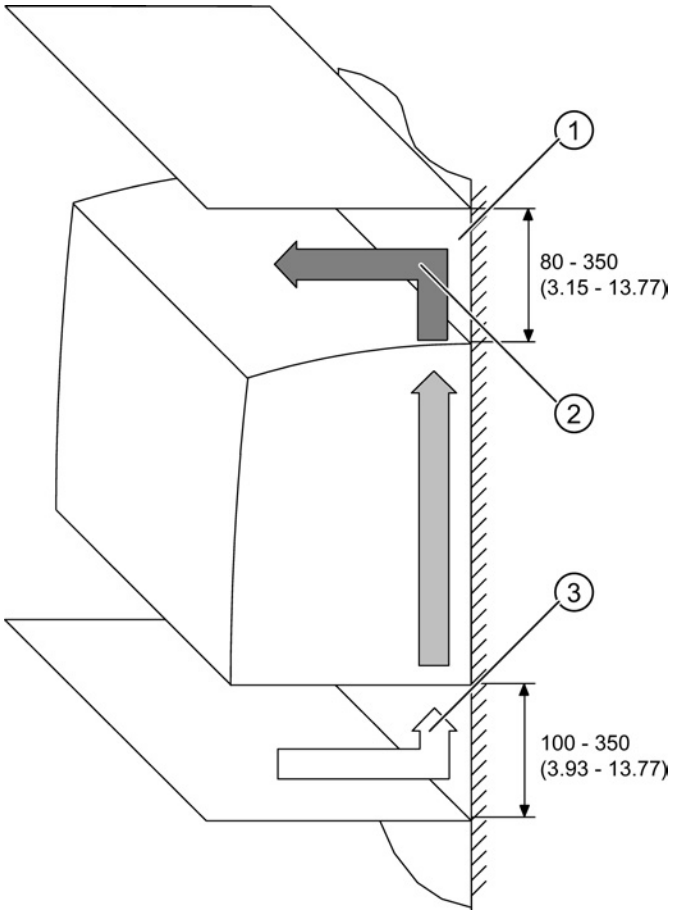

① Mounting surface
② Discharged air
③ Air intake

Figure 10-6 Ventilation clearances

10.9.2 Ventilation

The SINAMICS equipment is ventilated separately by means of integrated fans and is in some cases cooled by means of natural convection.

The cooling air must flow through the components vertically from bottom (cooler region) to top (region heated by operation).

If filtered fans, heat exchangers, or air conditioners are used, you must ensure that the air is flowing in the right direction. You must also ensure that the warm air can escape at the top. The cooling clearance above and below must be observed.

NOTICE
Damage caused by overheating Overheating can cause system damage. • Install the components with the specified orientation. • Maintain the minimum clearances to other components. • Install a suitable ventilation in the control cabinet in order to dissipate the power loss. • Install suitable air filters and keep the heat sink clean. • Ensure that the components are provided with adequate cooling air through the cooling openings. in particular, the connected signal and power cables must not cover the ventilation openings. • Ensure that the cooling air flow is not blocked by other devices or mixes with the exhaust air from other devices. If necessary, insert air deflectors.

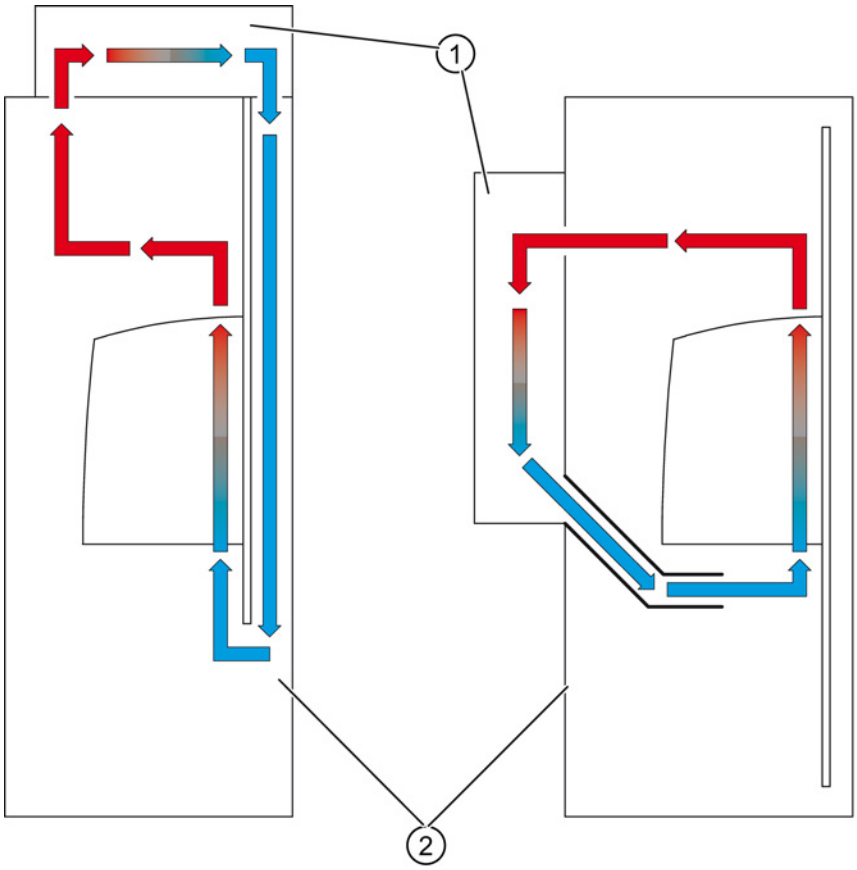

① Cooling units.
② Control cabinet

Figure 10-7 Examples of cabinet ventilation

If air conditioners are used, the relative air humidity of the expelled air increases as the air in the air conditioner cools and may exceed the dew point. If the relative humidity of the air entering the SINAMICS equipment is over 80% for an extended period of time, the insulation in the equipment may fail to function properly due to electrochemical reactions (see Chapter System overview (Page 29)). Using air baffle plates, for example, you must ensure that the cold air expelled from the air conditioner mixes with warm air in the cabinet before it enters the unit. This reduces the relative air humidity to uncritical values.

NOTICE
Damage caused by condensation Condensation on the components can result in their failure. • Select the air guidance and arrangement of the cooling equipment in such a way that no condensation can form on the components. The distance between the discharge opening of the air condition equipment and the electronic equipment must be at least 200 mm. • If required, install cabinet enclosure heating.

10.9.3 Power loss of components in rated operation

10.9.3.1 General

The tables below show the power loss for components during rated operation. The characteristic values apply for the following conditions:

- Line supply voltage for Power Modules 1-ph. 200 V AC to 3-ph. 380 V to 480 V AC ±10 %.
- Rated pulse frequency of Blocksize Power Modules, 4 kHz
- Rated pulse frequency of Power Modules Chassis, 2 kHz
- Operating components at their unit rating

10.9.3.2 Power loss of Control Units, Control Unit Adapters and Sensor Modules

Table 10- 21 Overview of power loss during rated operation for Control Units, Control Unit Adapters, Sensor Modules

Component	Unit	Power loss
Control Units		
CU310-2 DP	W	< 20
CU310-2 PN	W	20
Control Unit Adapter		
CUA31	W	2,4
CUA32	W	2,6
Sensor Modules		
SMC10	W	< 10
SMC20	W	< 10
SMC30	W	< 10

10.9.3.3 Power loss for line reactors and line filters

Table 10- 22 Overview of power loss during rated operation for line reactors and line filters

Rated output current I_{rated}	Frame size	Line voltage	Unit	Power loss 50/60 Hz
Line reactors for PM240-2 Blocksize				
4.0 A	FSA (1.1 kW)	1-phase 200 ... 240 VAC	W	23 / 25,3
11.3 A	FSA (4.0 kW)	1-phase 200 ... 240 VAC	W	36 / 39,6
22.3 A	FSB	1-phase 200 ... 240 VAC	W	53 / 58,3
47.0 A	FSC	1-phase 200 ... 240 VAC	W	88 / 96,8
4.0 A	FSA (1.1 kW)	3-phase 380 ... 480 VAC	W	23 / 25,3
11.3 A	FSA (4.0 kW)	3-phase 380 ... 480 VAC	W	36 / 39,6
22.3 A	FSB	3-phase 380 ... 480 VAC	W	53 / 58,3
47.0 A	FSC	3-phase 380 ... 480 VAC	W	88 / 96,8
Line reactors for Blocksize PM340				
0.9 A / 2.3 A	FSA	1-phase 200 ... 240 VAC	W	12,5 / 15
3.9 A	FSA	1-phase 200 ... 240 VAC	W	11,5 / 14,5
1.3 A / 1.7 A	FSA	3-phase 380 ... 480 VAC	W	6 / 7
2.2 A / 3.1 A	FSA	3-phase 380 ... 480 VAC	W	12,5 / 15
4.1 A	FSA	3-phase 380 ... 480 VAC	W	7,5 / 9
5.9 A / 7.7 A	FSB	3-phase 380 ... 480 VAC	W	9 / 11
10.2 A	FSB	3-phase 380 ... 480 VAC	W	27 / 32
18 A / 25 A	FSC	3-phase 380 ... 480 VAC	W	98 / 118
32 A	FSC	3-phase 380 ... 480 VAC	W	37 / 44
38 A / 45 A / 60 A	FSD	3-phase 380 ... 480 VAC	W	90 / 115
75 A / 90 A	FSE	3-phase 380 ... 480 VAC	W	170 / 215
110 A / 145 A / 178 A	FSF	3-phase 380 ... 480 VAC	W	280 / 360

Rated output current I_{rated}	Frame size	Line voltage	Unit	Power loss 50/60 Hz
Line reactors for Chassis Power Modules				
210 A	FX	3-phase 380 ... 480 VAC	W	274
260 A	FX	3-phase 380 ... 480 VAC	W	247
310 A	GX	3-phase 380 ... 480 VAC	W	267
380 A	GX	3-phase 380 ... 480 VAC	W	365
490 A	GX	3-phase 380 ... 480 VAC	W	365
Line filters for PM240-2 Blocksize				
15 A	FSA	3-phase 380 ... 480 VAC	W	13
23.5 A	FSB	3-phase 380 ... 480 VAC	W	22
49.4 A	FSC	3-phase 380 ... 480 VAC	W	39
Line filters for Blocksize PM340	FSA	3-phase 380 ... 480 VAC	W	< 5
Line filters for Chassis Power Modules				
210 A / 260 A	FX	3-phase 380 ... 480 VAC	W	49
310 A / 380 A	GX	3-phase 380 ... 480 VAC	W	49
490 A	GX	3-phase 380 ... 480 VAC	W	55

10.9.3.4 Power loss for Power Modules

Table 10- 23 Overview of power loss during rated operation for Power Modules

Rated output current I_{rated}/Unit rating based on I_{rated}	Frame size	Line voltage	Unit	Power loss
PM240-2 Blocksize				
7.5 A / 0.55 kW	FSA	1-phase/3-phase 200 … 240 VAC	kW	0,04
9.6 A / 0.75 kW	FSA	1-phase/3-phase 200 … 240 VAC	kW	0,04
13.5 A / 1.1 kW	FSB	1-phase/3-phase 200 … 240 VAC	kW	0,05
1801 A / 1.5 kW	FSB	1-phase/3-phase 200 … 240 VAC	kW	0,07
24.0 A / 2.2 kW	FSB	1-phase/3-phase 200 … 240 VAC	kW	0,12
35.9 A / 3.0 kW	FSC	1-phase/3-phase 200 … 240 VAC	kW	0,14
43.0 A / 4.0 kW	FSC	1-phase/3-phase 200 … 240 VAC	kW	0,18
29.0 A / 5.5 kW	FSC	3-phase 200 ... 240 VAC	kW	0,2
37.0 A / 7.5 kW	FSC	3-phase 200 ... 240 VAC	kW	0,26
2.3 A / 0.55 kW	FSA	3-phase 380 ... 480 VAC	kW	0,04
2.9 A / 0.75 kW	FSA	3-phase 380 ... 480 VAC	kW	0,04
4.1 A / 1.1 kW	FSA	3-phase 380 ... 480 VAC	kW	0,04
5.5 A / 1.5 kW	FSA	3-phase 380 ... 480 VAC	kW	0,07
7.7 A / 2.2 kW	FSA	3-phase 380 ... 480 VAC	kW	0,1
10.1 A / 3.0 kW	FSA	3-phase 380 ... 480 VAC	kW	0,12
13.3 A / 4.0 kW	FSB	3-phase 380 ... 480 VAC	kW	0,11
17.2 A / 5.5 kW	FSB	3-phase 380 ... 480 VAC	kW	0,15
22.2 A / 7.5 kW	FSB	3-phase 380 ... 480 VAC	kW	0,2
32.6 A / 11.0 kW	FSC	3-phase 380 ... 480 VAC	kW	0,3
39.9 A / 15.0 kW	FSC	3-phase 380 ... 480 VAC	kW	0,37
PM240-2 Blocksize Push Through				
9.6 A / 0.75 kW	FSA	1-phase/3-phase 200 … 240 VAC	kW	0,04
24.0 A / 2.2 kW	FSB	1-phase/3-phase 200 … 240 VAC	kW	0,12
43.0 A / 4.0 kW	FSC	1-phase/3-phase 200 … 240 VAC	kW	0,18
10.1 A / 3.0 kW	FSA	3-phase 380 ... 480 VAC	kW	0,12
22.2 A / 7.5 kW	FSB	3-phase 380 ... 480 VAC	kW	0,2
39.9 A / 15.0 kW	FSC	3-phase 380 ... 480 VAC	kW	0,37

Rated output current I_{rated}/Unit rating based on I_{rated}	Frame size	Line voltage	Unit	Power loss
Blocksize PM340				
0.9 A / 0.12 kW	FSA	1-phase 200 ... 240 VAC	kW	0,06
2.3 A / 0.37 kW	FSA	1-phase 200 ... 240 VAC	kW	0,075
3.9 A / 0.75 kW	FSA	1-phase 200 ... 240 VAC	kW	0,11
1.3 A / 0.37 kW	FSA	3-phase 380 ... 480 VAC	kW	0,10
1.7 A / 0.55 kW	FSA	3-phase 380 ... 480 VAC	kW	0,10
2.2 A / 0.75 kW	FSA	3-phase 380 ... 480 VAC	kW	0,10
3.1 A / 1.1 kW	FSA	3-phase 380 ... 480 VAC	kW	0,11
4.1 A / 1.5 kW	FSA	3-phase 380 ... 480 VAC	kW	0,11
5.9 A / 2.2 kW	FSB	3-phase 380 ... 480 VAC	kW	0,14
7.7 A / 3 kW	FSB	3-phase 380 ... 480 VAC	kW	0,16
10.2 A / 4 kW	FSB	3-phase 380 ... 480 VAC	kW	0,18
18 A / 7.5 kW	FSC	3-phase 380 ... 480 VAC	kW	0,24
25 A / 11 kW	FSC	3-phase 380 ... 480 VAC	kW	0,30
32 A / 15 kW	FSC	3-phase 380 ... 480 VAC	kW	0,40
38 A / 18.5 kW	FSD	3-phase 380 ... 480 VAC	kW	0,38
45 A / 22 kW	FSD	3-phase 380 ... 480 VAC	kW	0,51
60 A / 30 kW	FSD	3-phase 380 ... 480 VAC	kW	0,69
75 A / 37 kW	FSE	3-phase 380 ... 480 VAC	kW	0,99
90 A / 45 kW	FSE	3-phase 380 ... 480 VAC	kW	1,21
110 A / 55 kW	FSF	3-phase 380 ... 480 VAC	kW	1,42
145 A / 75 kW	FSF	3-phase 380 ... 480 VAC	kW	1,93
178 A / 90 kW	FSF	3-phase 380 ... 480 VAC	kW	2,31
Power Modules Chassis				
210 A / 110 kW	FX	3-phase 380 ... 480 VAC	kW	2,46
260 A / 132 kW	FX	3-phase 380 ... 480 VAC	kW	3,27
310 A / 160 kW	GX	3-phase 380 ... 480 VAC	kW	4,0
380 A / 200 kW	GX	3-phase 380 ... 480 VAC	kW	4,54
490 A / 250 kW	GX	3-phase 380 ... 480 VAC	kW	5,78

Service and maintenance 11

11.1 Safety instructions for service and maintenance

⚠ WARNING

Danger to life if the fundamental safety instructions and residual risks are not observed

The non-observance of the fundamental safety instructions and residual risks stated in Chapter 1 can result in accidents with severe injuries or death.

- Observe the fundamental safety instructions.
- Consider the residual risks for the risk evaluation.

⚠ DANGER

Danger to life due to electric shock caused by residual charge of the DC-link capacitors

Due to the DC-link capacitors, a hazardous voltage is present in the DC link for up to five minutes after the power supply has been switched off.

Touching live components results in death or severe injury.

- Only carry out work on these components after this time has elapsed.
- Measure the voltage before starting work on the DCP and DCN DC-link terminals.

⚠ WARNING

Danger to life due to electric shock from external supply voltage

If the auxiliary 230 VAC supplies are present, then a hazardous voltage is present at the components even when the main switch is in the open state.

Death or serious injury can result when live parts are touched.

- Disconnect the existing auxiliary supply circuits from the supply.

⚠ WARNING

Danger to life due to improper transport or installation of devices and components

Serious injury or even death and substantial material damage can occur if the devices are not transported or installed properly.

- Transport, mount, and remove the devices and components only if you are qualified to do so.
- Take into account that the devices and components are in some cases heavy and top-heavy and take the necessary precautionary measures.

11.2 Service and maintenance for components, Blocksize format

11.2.1 Replacing hardware components

Note

Hardware components may only be replaced when in the no-voltage state!

The following components can be replaced with replacement/exchange components with the same Order No.:

- Power Modules
- DRIVE-CLiQ components
- Control Units

11.2.2 Replacing the fan CU310-2 DP and CU310-2 PN

The fan is found on the underside of the CU310-2. It switches itself on according to the internal temperature in the unit.

If the internal temperature of the CU310-2 exceeds the permissible limit value, a category "CU" warning message signaling a Control Unit overtemperature will be output.

In this event, check for the following:

1. Is the cabinet temperature within the permitted range?
2. Is natural convection possible?
3. Is the fan blocked by dirt or foreign bodies?
4. Can the fan rotate freely?

The warning message will be cleared as soon as the fault is rectified and the temperature falls below the permissible limit.

Note

If the fan does not rotate and all the sources of the fault (items 1 to 4) can be excluded, then the fan is faulty and must be replaced.

Replacing the fan

The fan is available as a spare part and has the order number: 6SL3064-1AC00-0AA0.

1.	Disconnect the drive line-up from the power supply.		
2.	Remove the CU310-2 from the drive line-up (see Chapter Mounting Control Units and Control Unit Adapters (Page 332).)		
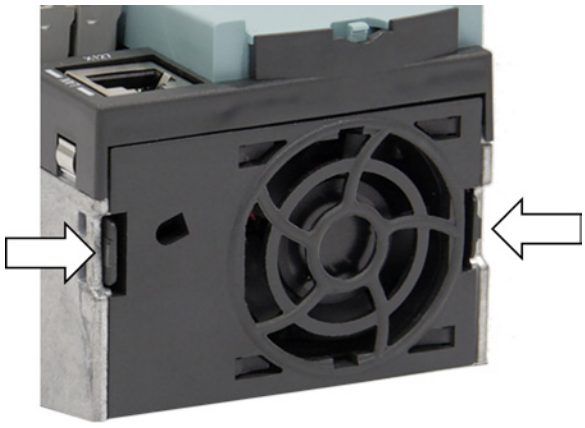		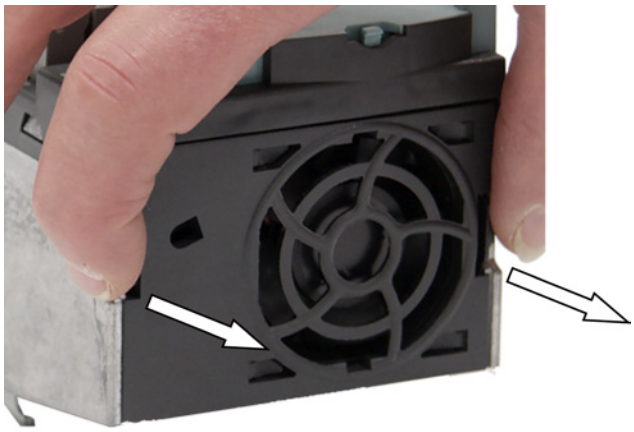	
3.	Release the snap hooks on the left and right sides of fan by pressing them inwards.	4.	Remove the fan forwards out of the CU310-2's housing.
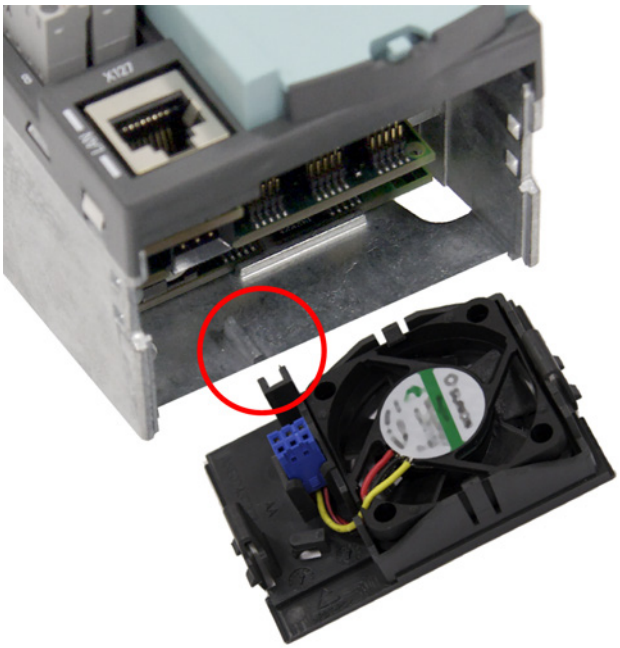			
5.	Locate the centering frame of the replacement fan on the mounting cam of the CU310-2.	6.	Slide the replacement fan onto the mounting cam in the Control Unit. Ensure that the fan connector fits into the centering frame of the PC board. Engage the two snap hooks at the fan in the Control Unit housing.
7.	Fit the CU310-2 to the drive line-up.		

11.2.3 Replacing the fan on the PM240-2

Fans are available as spare parts for all PM240-2 installation sizes.

Note

Only trained personnel may replace the fan, observing ESD guidelines.

Requirements

1. Disconnect the PM240-2 from the power supply.
2. Disconnect all cable connectors from the Power Module.

Frame sizes FSA/FSB/FSC

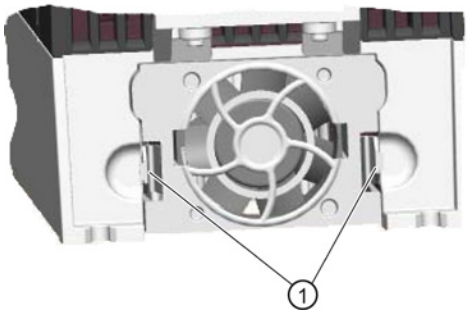

Figure 11-1 Fan replacement PM240-2, frame size FSB

1. Release the lock ① of the fan (1 lock on FSA, 2 locks on FSB and FSC.)
2. Withdraw the fan from the Power Module.
3. Remove the connector.
4. Remove the fan.
5. Connect the connector to the new fan.
6. Insert the new fan in the Power Module.

11.2.4 Replacing the fan on the PM340

Fans are available as spare parts for all frame sizes of PM340.

Note

Only trained personnel may replace the fan, observing ESD guidelines.

Requirements

1. Disconnect the PM340 from the power supply.
2. Remove the device or the drive line-up.

Frame sizes FSA/FSB/FSC

Note

You will require a cross-tip screwdriver to remove and install the fan of the PM340 for frame sizes FSA to FSC.

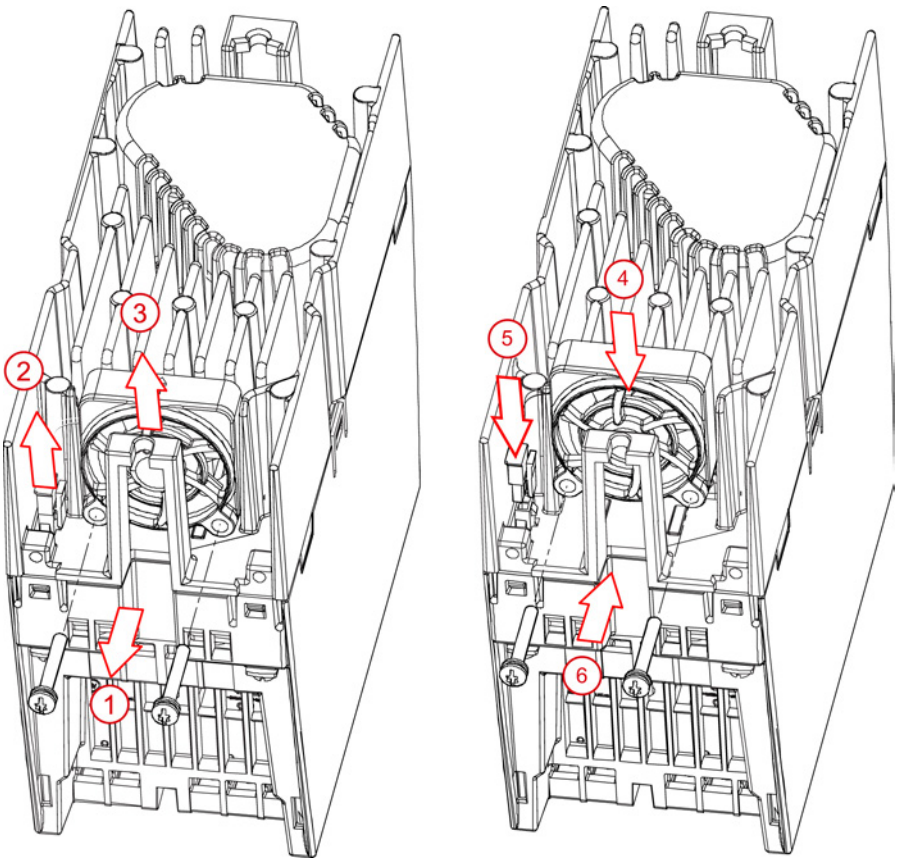

Figure 11-2 PM340 fan replacement, frame size FSA

1. Remove the fixing screws.
2. Remove the connector.
3. Remove the fan.
4. Insert the new fan.
5. Insert the connector.
6. Tighten the mounting screws (0.4 Nm tightening torque).

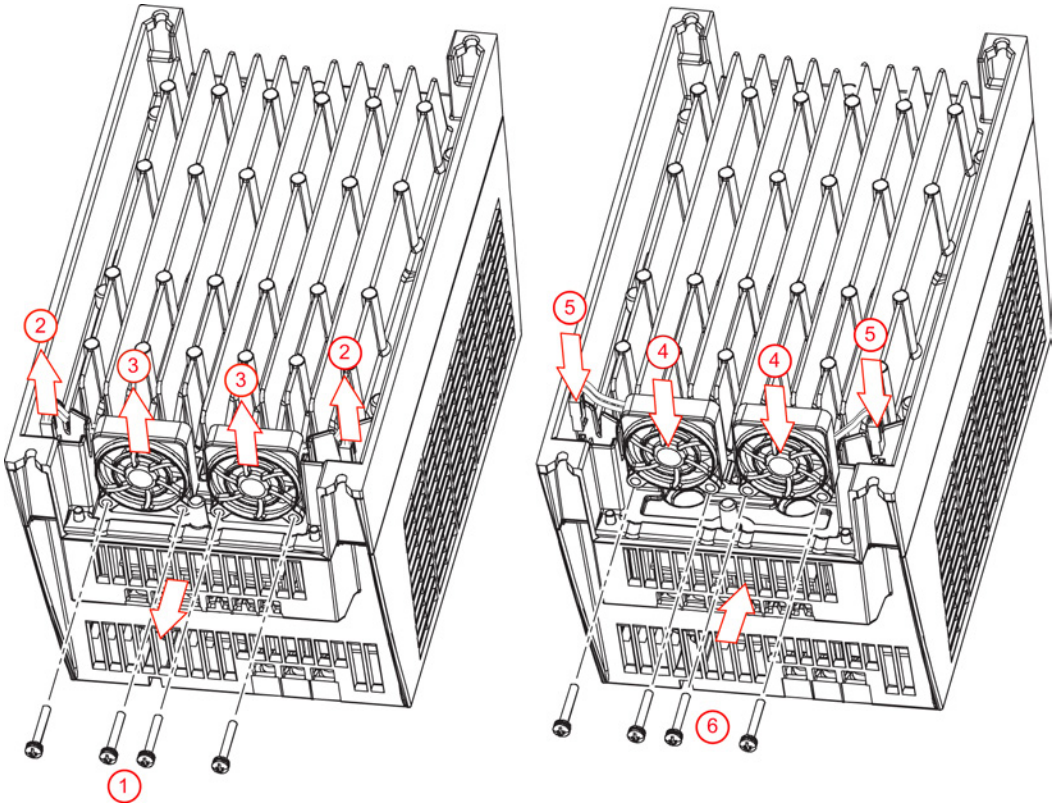

Figure 11-3 PM340 fan replacement, frame size FSB/FSC (0.4 Nm tightening torque)

Frame sizes FSD/FSE

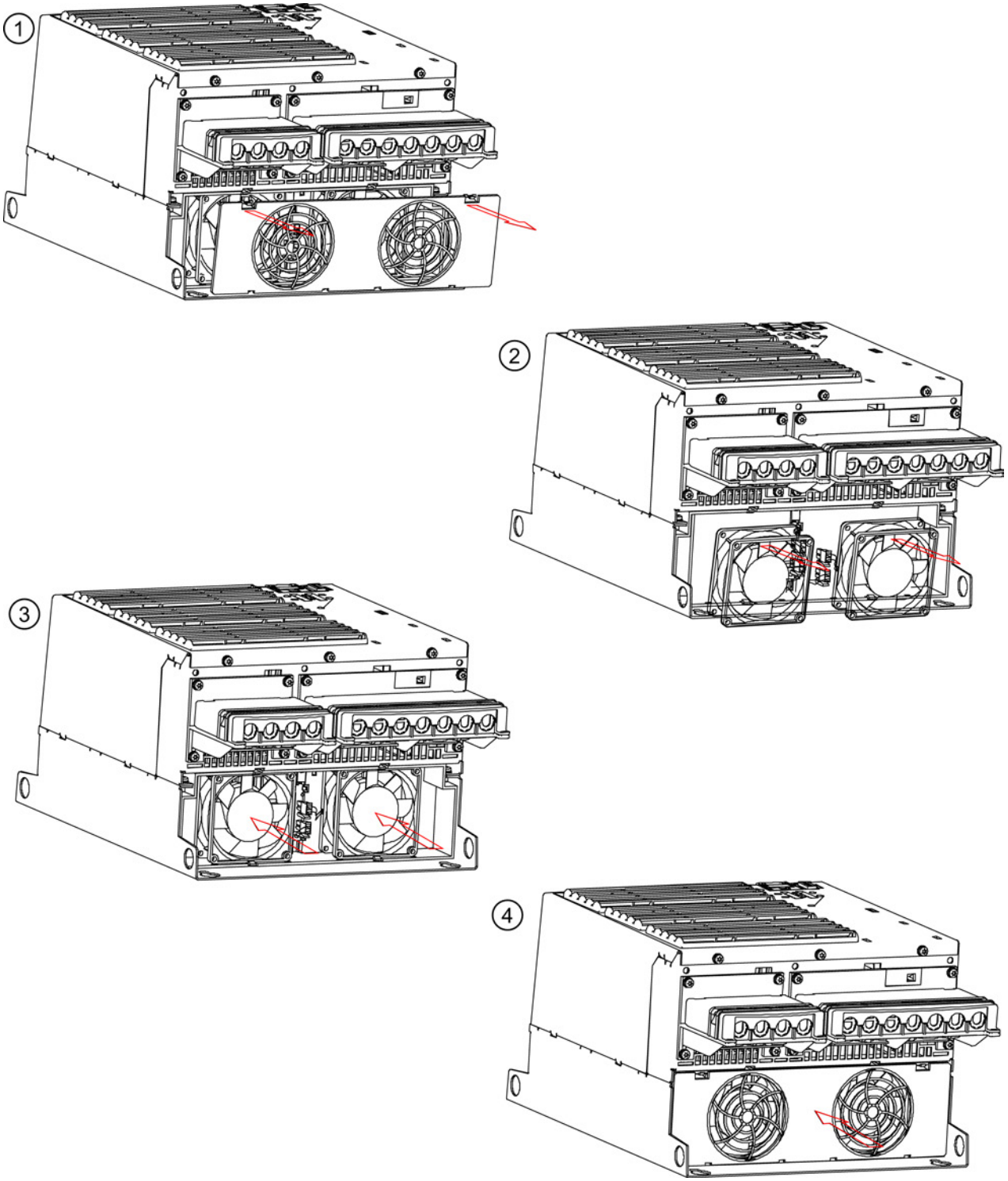

Figure 11-4 PM340 fan replacement, frame sizes FSD/FSE

1. Remove the cover.
2. Remove both connectors and both fans.
3. Insert the new fans and reattach both connectors.
4. Close the cover.

Frame size FSF

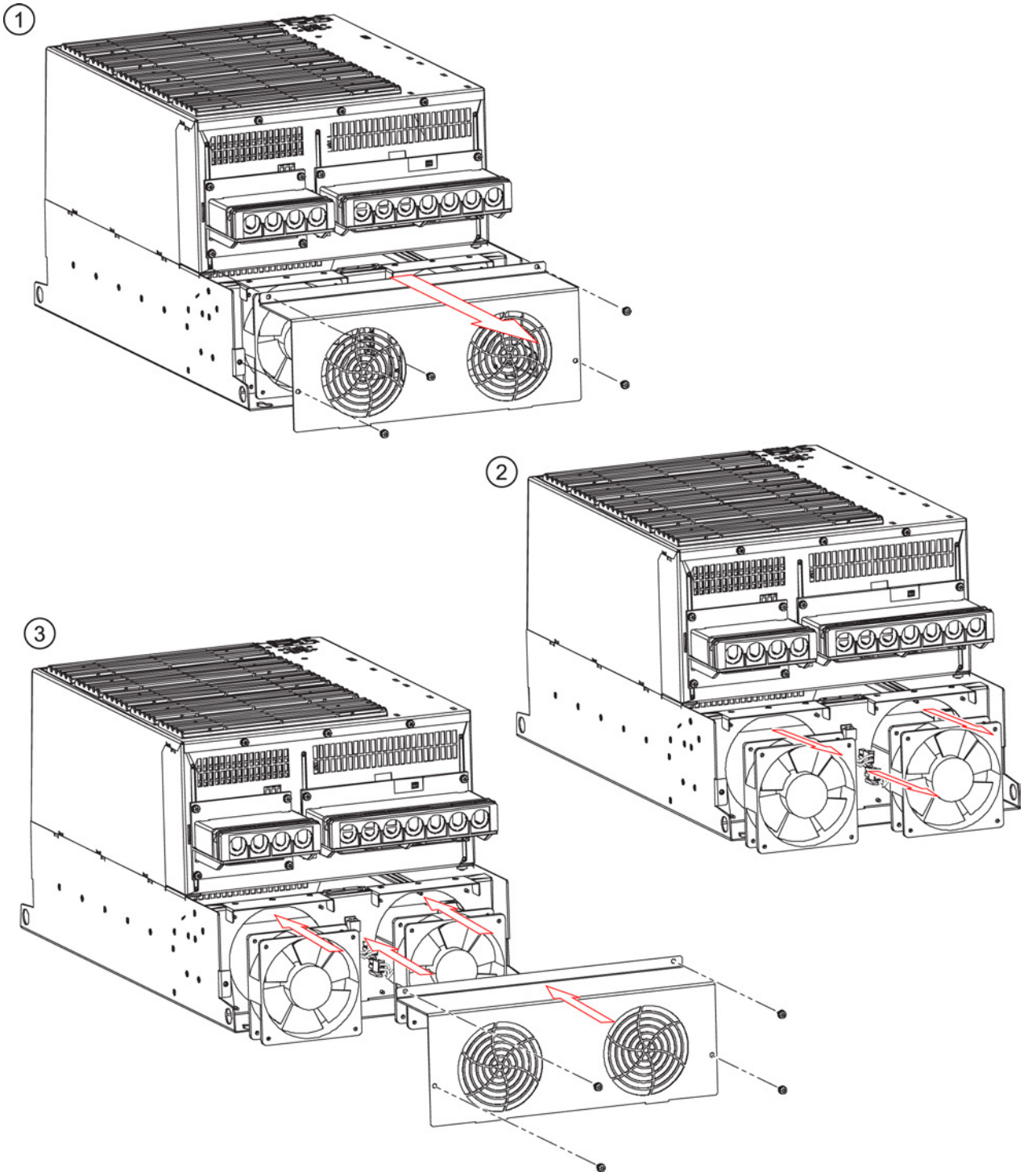

Figure 11-5 PM340 fan replacement, frame size FSF

1. Unfasten the screws and remove the cover.
2. Remove both connectors and both fans.
3. Insert the new fans. Plug in both connectors. Close the cover and fasten the screws (3.0 Nm tightening torque).

11.3 Service and maintenance for Chassis format components

Maintenance is intended to ensure that the equipment remains in the specified condition. Dirt and contamination must be removed regularly and parts subject to wear replaced.

The following points must generally be observed.

Dust deposits

Dust deposits inside the device must be removed at regular intervals (or at least once a year) by qualified personnel in line with the relevant safety regulations. The device must be cleaned using a brush and vacuum cleaner. Areas that cannot be easily reached must be cleaned with dry compressed air (max. 100 kPa).

Ventilation

The ventilation openings in the devices must never be obstructed. The fans must be checked to make sure that they are functioning correctly.

Cable and screw terminals

Cable and screw terminals must be checked regularly to ensure that they are secure in position, and if necessary, retightened. Cabling must be checked for defects. Defective parts must be replaced immediately.

Note

The actual intervals at which maintenance procedures are to be performed depend on the installation conditions (cabinet environment) and the operating conditions.

Siemens offers its customers support in the form of a service contract. For further details, contact your regional office or sales office.

11.3.1 Maintenance

Servicing involves activities and procedures for maintaining and restoring the operating condition of the devices.

Required tools

The following tools are required for replacing components:

- Spanner or socket spanner (w/f 10)
- Spanner or socket spanner (w/f 13)
- Spanner or socket spanner (w/f 16/17)
- Spanner or socket spanner (w/f 18/19)
- Hexagon-socket spanner (size 8)
- Torque wrench up to 50 Nm
- Screwdriver size 1 / 2

- Screwdriver Torx T20
- Screwdriver Torx T30

Tightening torques for current-carrying parts

When securing connections for current-conducting parts (supply/motor connections, busbars), you must observe the following tightening torques.

Table 11- 1 Tightening torques for connecting current-conducting parts

Screw	Torque
M6	6 Nm
M8	13 Nm
M10	25 Nm
M12	50 Nm

11.3.2 Installation equipment

Description

The installation equipment is used to install and remove the power blocks for Power Modules in the Chassis format.

It is used as an installation aid, which is placed in front of and secured to the module. The telescopic guide support allows the withdrawable device to be adjusted according to the height at which the power blocks are installed. Once the mechanical and electrical connections have been removed, the power block can be removed from the module, whereby the power block is guided and supported by the guide rails on the withdrawable devices.

Figure 11-6 Installation equipment

Order No.

Order number for the installation device: 6SL3766-1FA00-0AA0.

11.3.3 Replacing components

11.3.3.1 Replacing the Powerblock, Power Module, frame size FX

Replacing the powerblock

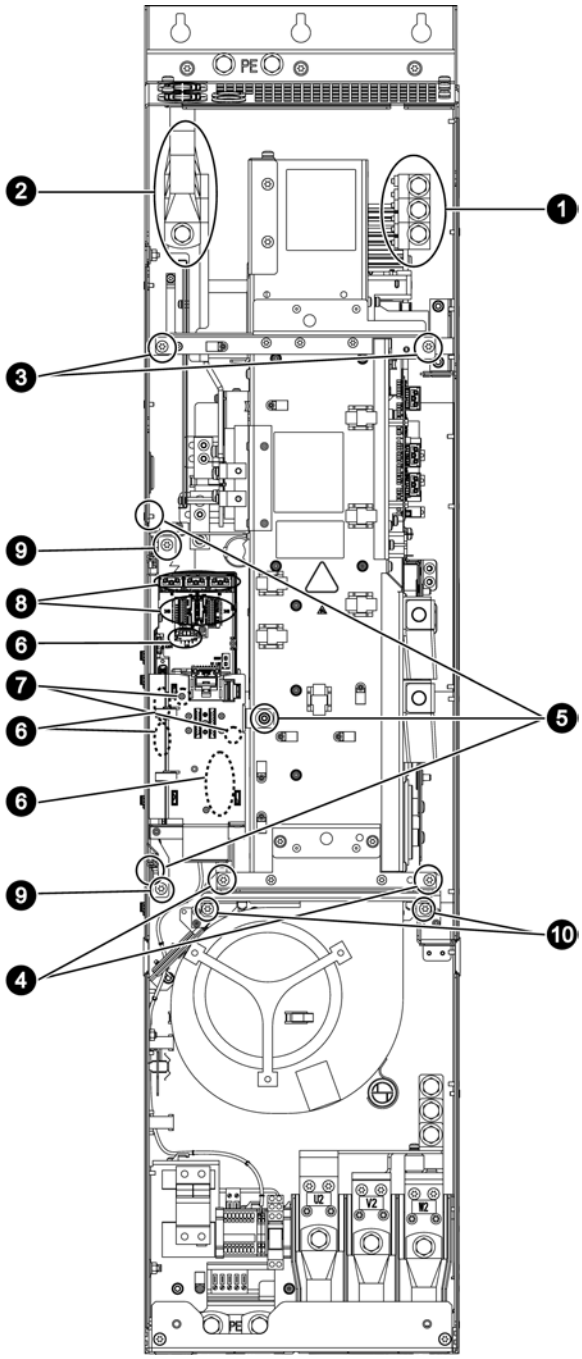

Figure 11-7 Replacing the Powerblock, Power Module, frame size FX

Preparatory steps

- Disconnect the drive line-up.
- Make sure the power block is accessible.
- Remove the front cover.

Removal

The steps for the removal procedure are numbered in accordance with the previous diagram.

1. Unscrew the connection of the motor outgoing feeder (3 screws).
2. Unscrew the connection for the infeed (3 screws).
3. Remove the retaining screws at the top (2 screws).
4. Remove the retaining screws at the bottom (2 screws).
5. Remove the retaining nuts of the supporting plate for the Control Unit and remove the supporting plate (3 nuts).
6. Remove DRIVE-CLiQ cables and connections at –X41/–X42/–X46 (6 connectors).
   The DRIVE-CLiQ cables should be marked to ensure that they are subsequently correctly inserted.
7. Take out the retaining screws for the IPD card (2 screws) and remove the IPD card from -X45 connector on the Control Interface Module.
8. Disconnect the plug-in connections of the fiber-optic cables and the signal cables (5 connectors).
9. Remove the retaining screws of the withdrawable electronic unit (2 screws) and carefully remove the electronic unit.
   When removing the plug-in module, 5 additional connectors (2 at the top, 3 at the bottom) must be removed one after the other.
10. Unscrew the 2 retaining screws for the fan and attach the mounting device for the power block at this position.

You can now remove the Powerblock.

NOTICE
Damage to signal cables while removing the power block The power block might damage signal cables when it is removed. • Remember that the power block weighs approximately 70 kg.

Installation

To reinstall, perform the above steps in reverse order.

Note

Connecting fiber-optic cables

The fiber-optic cable plugs must be re-inserted at their original slot. Fiber-optic cables and sockets are accordingly labeled for correct assignment (U11, U21, U31).

NOTICE

Material damage caused by loose power connections

Insufficient tightening torques can result in faulty electrical connections. This can cause fire damage or functional faults.

- Tighten all power connections with the specified tightening torques, e.g. line supply connection, motor connection.

Note

Connection clip to the interference-suppression capacitor

The connection clip to the interference-suppression capacitor is mounted on the spare power block together with a yellow warning label.

Please note the information in Chapter "Electrical connection" of the corresponding device.

11.3.3.2 Replacing the Powerblock, Power Module, frame size GX

Replacing the powerblock

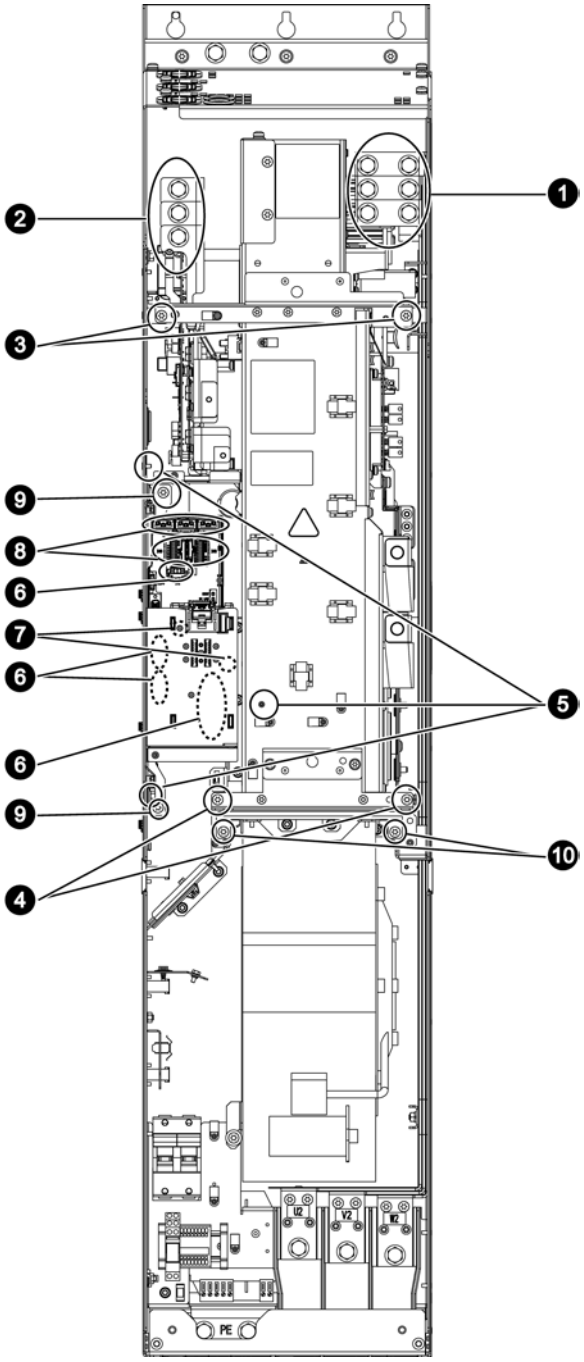

Figure 11-8 Replacing the Powerblock, Power Module, frame size GX

Preparatory steps

- Disconnect the drive line-up.
- Make sure the power block is accessible.
- Remove the front cover.

Removal

The steps for the removal procedure are numbered in accordance with the previous diagram.

1. Unscrew the connection of the motor outgoing feeder (6 screws).
2. Unscrew the connection for the infeed (3 screws).
3. Remove the retaining screws at the top (2 screws).
4. Remove the retaining screws at the bottom (2 screws).
5. Remove the retaining nuts of the supporting plate for the Control Unit and remove the supporting plate (3 nuts).
6. Remove DRIVE-CLiQ cables and connections at –X41/–X42/–X46 (6 connectors).
   The DRIVE-CLiQ cables should be marked to ensure that they are subsequently correctly inserted.
7. Take out the retaining screws for the IPD card (2 screws) and remove the IPD card from -X45 connector on the Control Interface Module.
8. Disconnect the plug-in connections of the fiber-optic cables and signal cables (5 connectors).
9. Remove the retaining screws of the withdrawable electronic unit (2 screws) and carefully remove the electronic unit.
   When removing the plug-in module, 5 additional connectors (2 at the top, 3 at the bottom) must be removed one after the other.
10. Unscrew 2 retaining screws for the fan and attach the mounting device for the power block at this position.

You can now remove the Powerblock.

NOTICE
Damage to signal cables while removing the power block The power block might damage signal cables when it is removed. • Remember that the power block weighs approximately 102 kg.

Installation

To reinstall, perform the above steps in reverse order.

Note

Connecting fiber-optic cables

The fiber-optic cable plugs must be re-inserted at their original slot. Fiber-optic cables and sockets are accordingly labeled for correct assignment (U11, U21, U31).

NOTICE

Material damage caused by loose power connections

Insufficient tightening torques can result in faulty electrical connections. This can cause fire damage or functional faults.

- Tighten all power connections with the specified tightening torques, e.g. line supply connection, motor connection.

Note

Connection clip to the interference-suppression capacitor

The connection clip to the interference-suppression capacitor is mounted on the spare power block together with a yellow warning label.

Please note the information in the chapter "Electrical connection" of the corresponding device.

11.3.3.3 Replacing the Control Interface Module, Power Module, frame size FX

Replacing the Control Interface Module

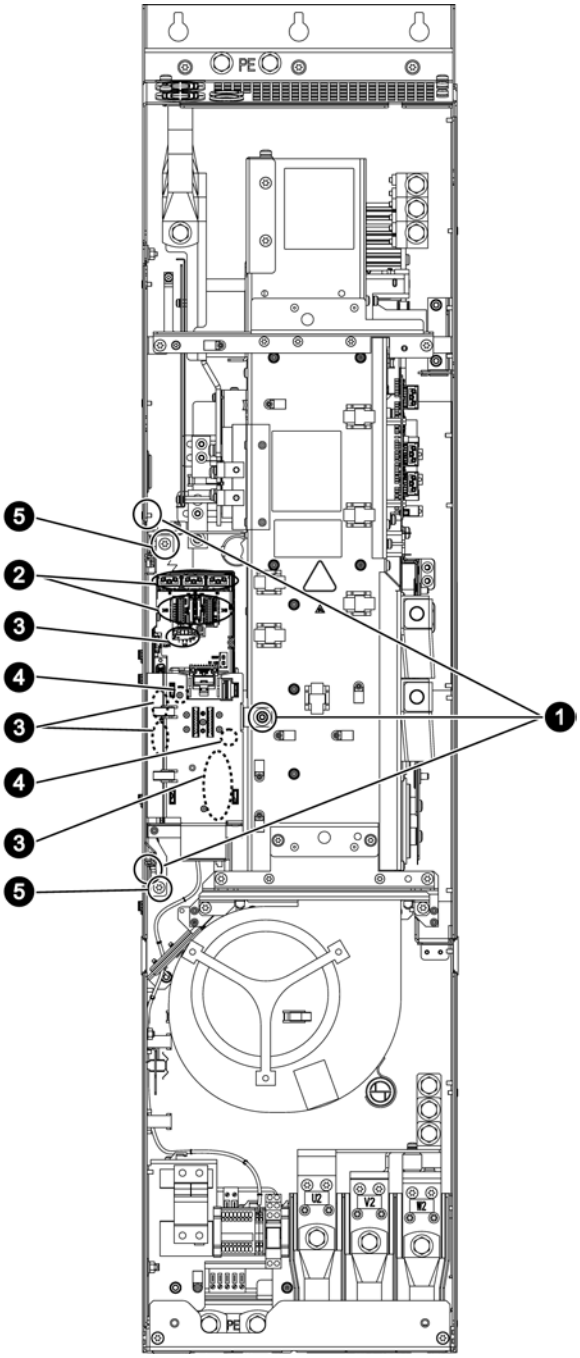

Figure 11-9 Replacing the Control Interface Module, Power Module, frame size FX

Preparatory steps

- Disconnect the drive line-up.
- Make sure the power block is accessible.
- Remove the front cover.

Removal

The steps for the removal procedure are numbered in accordance with the previous diagram.

1. Remove the retaining nuts of the supporting plate for the Control Unit and remove the supporting plate (3 nuts).
2. Disconnect the plug-in connections of the fiber-optic cables and signal cables (5 connectors).
3. Remove DRIVE-CLiQ cables and connections at –X41/–X42/–X46 (6 connectors).
   The DRIVE-CLiQ cables should be marked to ensure that they are subsequently correctly inserted.
4. Take out the retaining screws for the IPD card (2 screws) and remove the IPD card from -X45 connector on the Control Interface Module.
5. Remove the retaining screws for the Control Interface Module (2 screws).
   When removing the Control Interface Module, 5 additional connectors (2 at the top, 3 at the bottom) must be removed one after the other.

NOTICE
Damage to signal cables while removing the power block The power block might damage signal cables when it is removed. • Remember that the power block is very heavy.

Installation

To reinstall, perform the above steps in reverse order.

Note

Connecting fiber-optic cables

The fiber-optic cable plugs must be re-inserted at their original slot. Fiber-optic cables and sockets are accordingly labeled for correct assignment (U11, U21, U31).

NOTICE
Material damage caused by loose power connections Insufficient tightening torques can result in faulty electrical connections. This can cause fire damage or functional faults. • Tighten all power connections with the specified tightening torques, e.g. line supply connection, motor connection.

11.3.3.4 Replacing the Control Interface Module, Power Module, frame size GX

Replacing the Control Interface Module

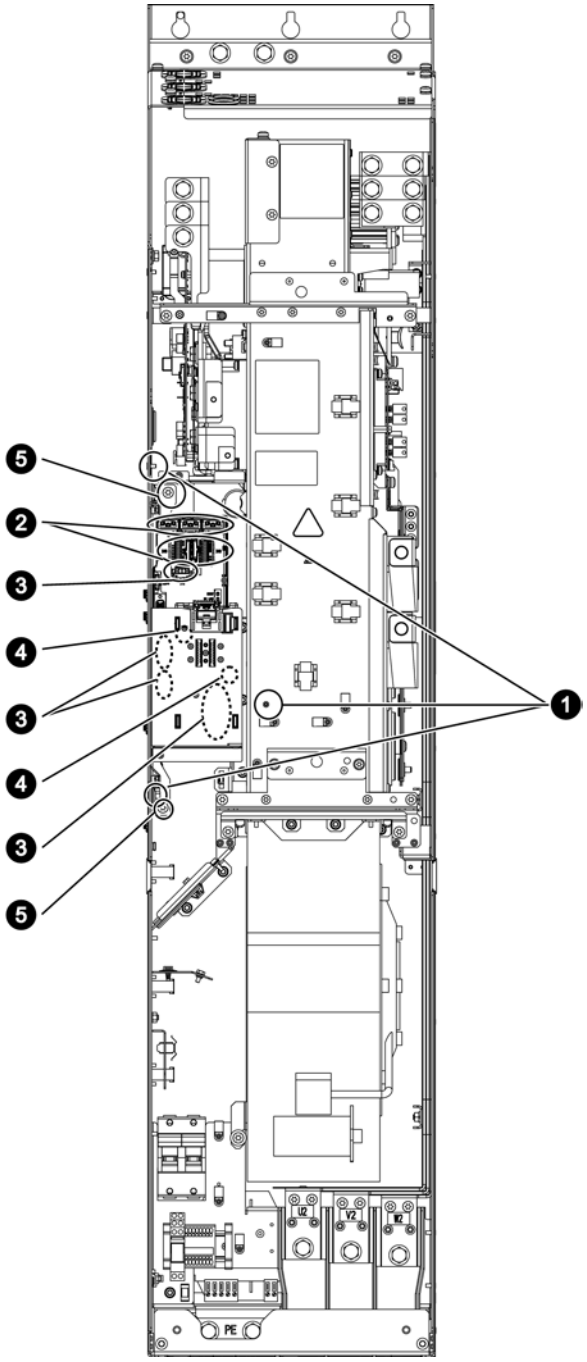

Figure 11-10 Replacing the Control Interface Module, Power Module, frame size GX

Preparatory steps

- Disconnect the drive line-up.
- Make sure the power block is accessible.
- Remove the front cover.

Removal

The steps for the removal procedure are numbered in accordance with the previous diagram.

1. Remove the retaining nuts of the supporting plate for the Control Unit and remove the supporting plate (3 nuts).
2. Disconnect the plug-in connections of the fiber-optic cables and signal cables (5 connectors).
3. Remove DRIVE-CLiQ cables and connections at –X41/–X42/–X46 (6 connectors).
   The DRIVE-CLiQ cables should be marked to ensure that they are subsequently correctly inserted.
4. Take out the retaining screws for the IPD card (2 screws) and remove the IPD card from -X45 connector on the Control Interface Module.
5. Remove the retaining screws for the Control Interface Module (2 screws).
   When removing the Control Interface Module, 5 additional connectors (2 at the top, 3 at the bottom) must be removed one after the other.

NOTICE
Damage to signal cables while removing the power block The power block might damage signal cables when it is removed. • Remember that the power block is very heavy.

Installation

To reinstall, perform the above steps in reverse order.

Note

Connecting fiber-optic cables

The fiber-optic cable plugs must be re-inserted at their original slot. Fiber-optic cables and sockets are accordingly labeled for correct assignment (U11, U21, U31).

NOTICE
Material damage caused by loose power connections Insufficient tightening torques can result in faulty electrical connections. This can cause fire damage or functional faults. • Tighten all power connections with the specified tightening torques, e.g. line supply connection, motor connection.

11.3.3.5 Replacing the fan, Power Module, frame size FX

Replacing the fan

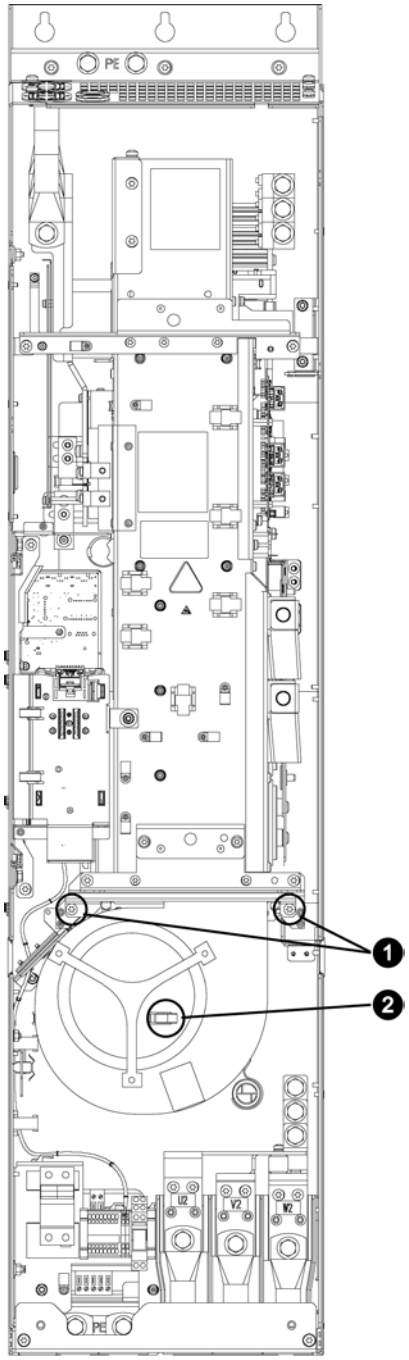

Figure 11-11 Replacing the fan, Power Module, frame size FX

Description

The average service life of the device fans is 50,000 hours. In practice, however, the service life depends on other variables, e.g. ambient temperature, degree of cabinet protection, etc. and, therefore, may deviate from this value in individual cases.

The fans must be replaced in good time to ensure that the device is available.

Preparatory steps

- Disconnect the drive line-up.
- Provide unobstructed access.
- Remove the front cover.

Removal

The steps for the removal procedure are numbered in accordance with the previous diagram.

1. Remove the retaining screws for the fan (2 screws).
2. Disconnect the supply cables (1 x "L", 1 x "N").

You can now carefully remove the fan.

NOTICE
Damage to signal cables while removing the power block The power block might damage signal cables when it is removed. • Remember that the power block is very heavy.

Installation

To reinstall, perform the above steps in reverse order.

Note

Connecting fiber-optic cables

The fiber-optic cable plugs must be re-inserted at their original slot. Fiber-optic cables and sockets are accordingly labeled for correct assignment (U11, U21, U31).

NOTICE
Material damage caused by loose power connections Insufficient tightening torques can result in faulty electrical connections. This can cause fire damage or functional faults. • Tighten all power connections with the specified tightening torques, e.g. line supply connection, motor connection.

11.3.3.6 Replacing the fan, Power Module, frame size GX

Replacing the fan

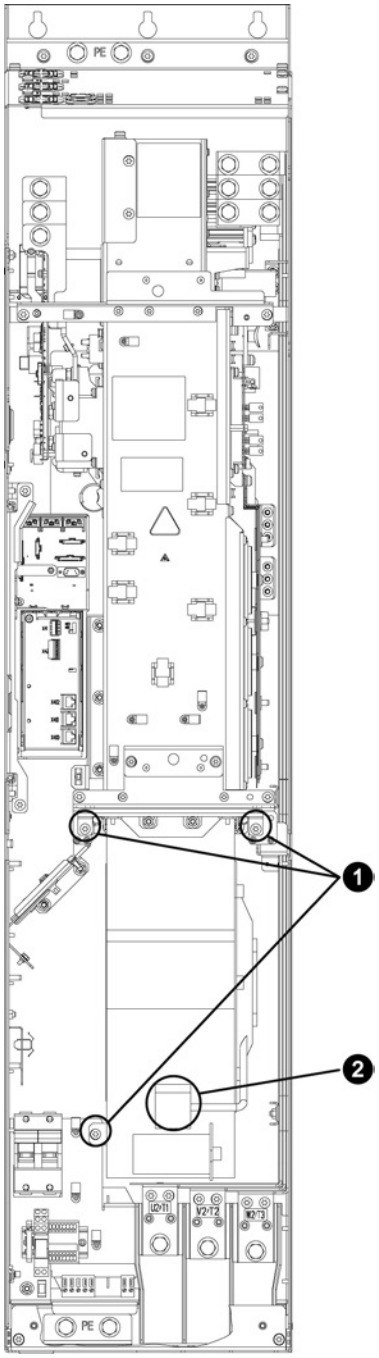

Figure 11-12 Replacing the fan, Power Module, frame size GX

Description

The average service life of the device fans is 50,000 hours. In practice, however, the service life depends on other variables, e.g. ambient temperature, degree of cabinet protection, etc. and, therefore, may deviate from this value in individual cases.

The fans must be replaced in good time to ensure that the device is available.

Preparatory steps

- Disconnect the drive line-up.
- Provide unobstructed access.
- Remove the front cover.

Removal

The steps for the removal procedure are numbered in accordance with the previous diagram.

1. Remove the retaining screws for the fan (3 screws).
2. Disconnect the supply cables (1 x "L", 1 x "N").

You can now carefully remove the fan.

NOTICE
Damage to signal cables while removing the power block The power block might damage signal cables when it is removed. • Remember that the power block is very heavy.

Installation

To reinstall, perform the above steps in reverse order.

NOTICE
Material damage caused by loose power connections Insufficient tightening torques can result in faulty electrical connections. This can cause fire damage or functional faults. • Tighten all power connections with the specified tightening torques, e.g. line supply connection, motor connection.

11.4 Forming the DC link capacitors

NOTICE
Damage in the case of long storage periods After being in storage for more than two years, the components may suffer damage when switched on. • Form the DC link capacitors of the Power Module again.

If the cabinet is commissioned within two years of its date of manufacture, the DC link capacitors do not need to be reformed. The date of manufacture can be taken from the serial number on the rating plate.

Note

The storage period starts from the date of manufacture and not from the date on which the equipment was shipped.

Date of manufacture

The date of manufacture can be determined from the following assignment to the serial number (e.g. T-**S9**2067000015 for 2004, September):

Table 11- 2 Production year and month

Character	Year of manufacture	Character	Month of manufacture
S	2004	1 to 9	January to September
D	2005	O	October
U	2006	N	November
V	2007	D	December
W	2008		
X	2009		
A	2010		
B	2011		
C	2012		
D	2013		
E	2014		

The serial number is found on the rating plate.

When DC link capacitors are formed, a defined voltage is connected to them and a defined current flows so that the appropriate capacitor characteristics are restored for them to be re-used as DC link capacitors.

Forming circuit

The forming circuit can be built using incandescent lamps or, alternatively, resistors.

Components required for reforming outside the drive line-up

- 1 fuse switch, triple 400 V / 10 A or double 230 V / 10 A
- Cable 1.5 mm^2
- 3 incandescent lamps 230 V / 100 W for a line voltage of 380 - 480 V 3 AC. Alternatively, use 3 resistors of 1 kΩ / 100 W each (e.g. GWK150J1001KLX000 from Vishay) instead of the incandescent lamps.
- 2 incandescent lamps 230 V / 100 W for a line voltage of 200 - 240 V 1 AC. Alternatively, use 2 resistors of 1 kΩ / 100 W each (e.g. GWK150J1001KLX000 from Vishay) instead of the incandescent lamps.
- Various Small components, such as lamp socket, etc.

⚠ DANGER

Danger to life due to electric shock caused by residual charge of the DC-link capacitors

Due to the DC link capacitors, a hazardous voltage is present in the DC link for up to 5 minutes after the power supply has been switched off.

Touching live components results in death or severe injury.

- Do not open the protective cover of the DC link until 5 minutes have elapsed.
- Measure the voltage before starting work on the DCP and DCN DC link terminals.

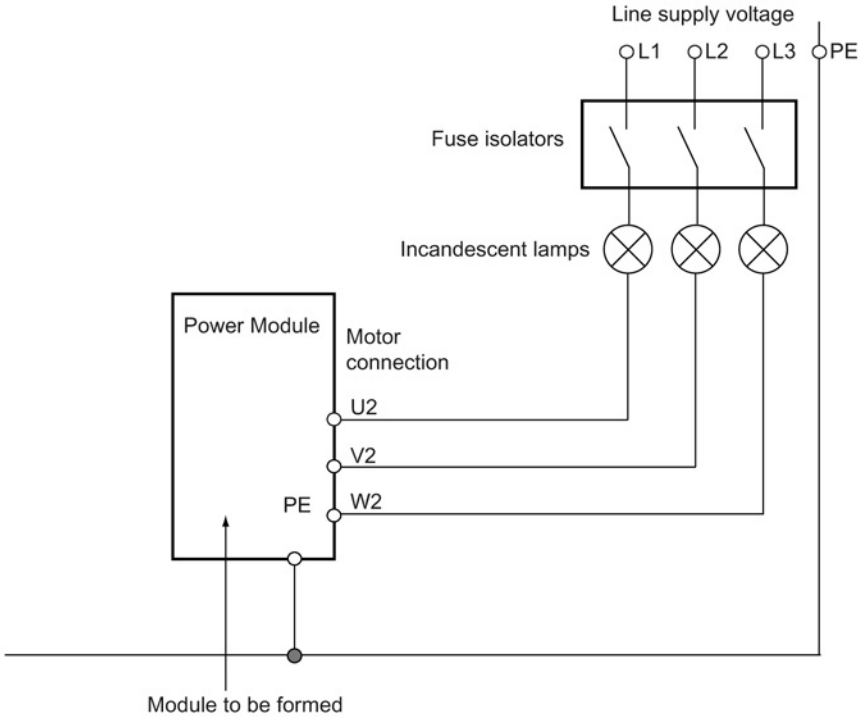

Figure 11-13 Forming circuit for 3-ph AC Power Modules with incandescent lamps

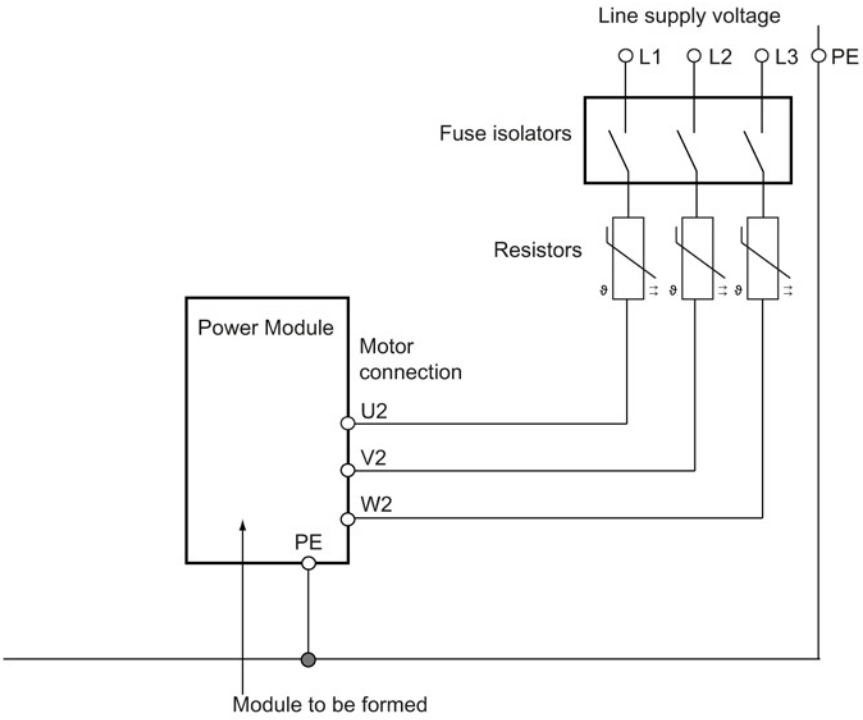

Figure 11-14 Forming circuit for 3-ph AC Power Modules with resistors

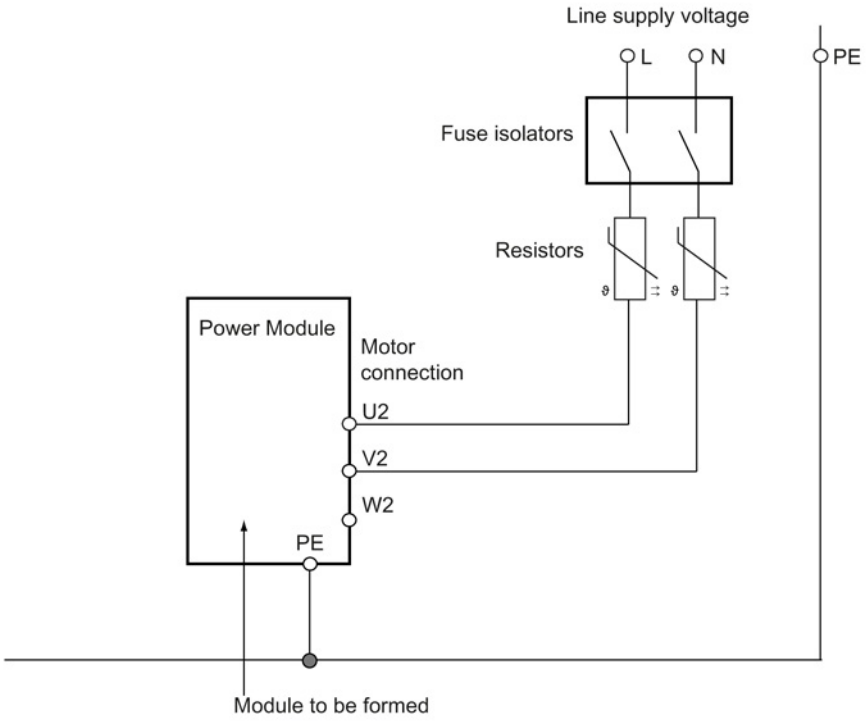

Figure 11-15 Forming circuit for 1-ph AC Power Modules with resistors

Procedure

- Make sure that the device **does not** receive a power-on command (e.g. from the keyboard or terminal block).
- Connect the forming circuit.
- While forming, the incandescent lamps must become less bright or go completely dark. If the incandescent lamps continue to be brightly lit, a fault has occurred in the drive unit or in the wiring.
- To form using resistors, the modules must remain in the circuit for approx. 1 h. The resistors will become very hot if there is a fault in the unit (surface temperature > 80 °C).

11.5 Spare parts

Spare parts are available on the Internet at:

http://support.automation.siemens.com/WW/view/de/16612315

11.6 Recycling and disposal

Dispose of the product according to the applicable national regulations.

The products described in this Equipment Manual are extensively recyclable on account of the low-toxic composition of the materials used. To recycle and dispose of your old device in an environmentally friendly way, please contact a company that disposes of electronic waste.

Appendix A

A.1 List of abbreviations

Note

The following list of abbreviations includes all abbreviations and their meanings used in the entire SINAMICS family of drives.

Abbreviation	Source of the abbreviation	Meaning
A		
A…	Alarm	Alarm
AC	Alternating Current	Alternating current
ADC	Analog Digital Converter	Analog-digital converter
AI	Analog Input	Analog input
AIM	Active Interface Module	Active Interface Module
ALM	Active Line Module	Active Line Module
AO	Analog Output	Analog output
AOP	Advanced Operator Panel	Advanced Operator Panel
APC	Advanced Positioning Control	Advanced Positioning Control
AR	Automatic Restart	Automatic restart
ASC	Armature Short-Circuit	Armature short-circuit
ASCII	American Standard Code for Information Interchange	American standard code for information interchange
AS-i	AS-Interface (Actuator Sensor Interface)	AS interface (open bus system in automation technology)
ASM	Asynchronmotor	Induction motor
B		
BB	Betriebsbedingung	Operating condition
BERO	-	Proximity switch
BI	Binector Input	Binector Input
BIA	Berufsgenossenschaftliches Institut für Arbeitssicherheit	BG Institute for Occupational Safety and Health
BICO	Binector Connector Technology	Binector connector technology
BLM	Basic Line Module	Basic Line Module

Abbreviation	Source of the abbreviation	Meaning
BO	Binector Output	Binector output
BOP	Basic Operator Panel	Basic Operator Panel
C		
C	Capacitance	Capacitance
C…	-	Safety message
CAN	Controller Area Network	Serial bus system
CBC	Communication Board CAN	Communication Board CAN
CBE	Communication Board Ethernet	PROFINET communication module (Ethernet)
CD	Compact Disc	Compact disk
CDS	Command Data Set	Command data set
CF Card	CompactFlash Card	CompactFlash card
CI	Connector Input	Connector Input
CLC	Clearance Control	Clearance control
CNC	Computer Numerical Control	Computerized numerical control
CO	Connector Output	Connector output
CO/BO	Connector Output/Binector Output	Connector/binector output
COB ID	CAN Object-Identification	CAN object identification
CoL	Certificate of License	Certificate of License
COM	Common contact of a change-over relay	Center contact on a changeover contact
COMM	Commissioning	Commissioning
CP	Communication Processor	Communications processor
CPU	Central Processing Unit	Central processing unit
CRC	Cyclic Redundancy Check	Cyclic redundancy check
CSM	Control Supply Module	Control Supply Module
CU	Control Unit	Control unit
CUA	Control Unit Adapter	Control Unit Adapter
CUD	Control Unit DC MASTER	Control Unit DC MASTER
D		
DAC	Digital Analog Converter	Digital-analog converter
DC	Direct Current	Direct current
DCB	Drive Control Block	Drive Control Block
DCBRK	DC Brake	DC braking
DCC	Drive Control Chart	Drive Control Chart
DCN	Direct Current Negative	Direct current negative
DCP	Direct Current Positive	Direct current positive
DDS	Drive Data Set	Drive data set
DI	Digital Input	Digital input
DI/DO	Digital Input/Digital Output	Bidirectional digital input/output
DMC	DRIVE-CLiQ Hub Module Cabinet	DRIVE-CLiQ Hub Module Cabinet
DME	DRIVE-CLiQ Hub Module External	DRIVE-CLiQ Hub Module External

Abbreviation	Source of the abbreviation	Meaning
DMM	Double Motor Module	Double Motor Module
DO	Digital Output	Digital output
DO	Drive Object	Drive object
DP	Decentralized Peripherals	Distributed I/O
DPRAM	Dual Ported Random Access Memory	Dual-Port Random Access Memory
DQ	DRIVE-CLiQ	DRIVE-CLiQ
DRAM	Dynamic Random Access Memory	Dynamic Random Access Memory
DRIVE-CLiQ	Drive Component Link with IQ	Drive Component Link with IQ
DSC	Dynamic Servo Control	Dynamic Servo Control
DTC	Digital Time Clock	Timer
E		
EASC	External Armature Short-Circuit	External armature short-circuit
EDS	Encoder Data Set	Encoder data set
EEPROM	Electrically Erasable Programmable Read-Only Memory	Electrically Erasable Programmable Read-Only-Memory
ESD	Elektrostatisch gefährdete Baugruppen	Electrostatic sensitive devices
ELCB	Earth Leakage Circuit Breaker	Residual current operated circuit breaker
ELP	Earth Leakage Protection	Ground-fault monitoring
EMC	Electromagnetic Compatibility	Electromagnetic compatibility
EMF	Electromotive Force	Electromotive force
EMK	Elektromotorische Kraft	Electromotive force
EMV	Elektromagnetische Verträglichkeit	Electromagnetic compatibility
EN	Europäische Norm	European standard
EnDat	Encoder-Data-Interface	Encoder interface
EP	Enable Pulses	Enable pulses
EPOS	Einfachpositionierer	Basic positioner
ES	Engineering System	Engineering System
ESB	Ersatzschaltbild	Equivalent circuit diagram
ESD	Electrostatic Sensitive Devices	Electrostatic sensitive devices
ESM	Essential Service Mode	Essential service mode
ESR	Extended Stop and Retract	Extended stop and retract
F		
F…	Fault	Fault
FAQ	Frequently Asked Questions	Frequently asked questions
FBLOCKS	Free Blocks	Free function blocks
FCC	Function Control Chart	Function control chart
FCC	Flux Current Control	Flux current control
FD	Function Diagram	Function diagram
F-DI	Failsafe Digital Input	Fail-safe digital input
F-DO	Failsafe Digital Output	Fail-safe digital output

Abbreviation	Source of the abbreviation	Meaning
FEM	Fremderregter Synchronmotor	Separately excited synchronous motor
FEPROM	Flash-EPROM	Non-volatile write and read memory
FG	Function Generator	Function generator
FI	-	Residual current
FOC	Fiber-Optic Cable	Fiber-optic cable
FP	Funktionsplan	Function diagram
FPGA	Field Programmable Gate Array	Field programmable gate array
FW	Firmware	Firmware
G		
GB	Gigabyte	Gigabyte
GC	Global Control	Global control telegram (broadcast telegram)
GND	Ground	Reference potential for all signal and operating voltages, usually defined as 0 V (also referred to as M)
GSD	Gerätestammdatei	Generic station description: describes the features of a PROFIBUS slave
GSV	Gate Supply Voltage	Gate supply voltage
GUID	Globally Unique Identifier	Globally Unique Identifier
H		
HF	High frequency	High frequency
HFD	Hochfrequenzdrossel	High-frequency reactor
HLA	Hydraulic Linear Actuator	Hydraulic linear drive
HLG	Hochlaufgeber	Ramp-function generator
HM	Hydraulic Module	Hydraulic Module
HMI	Human Machine Interface	Human machine interface
HTL	High-Threshold Logic	Logic with high fault threshold
HW	Hardware	Hardware
I		
i. V.	In Vorbereitung	Under development: This property is currently not available
I/O	Input/Output	Input/output
I2C	Inter-Integrated Circuit	Internal serial data bus
IASC	Internal Armature Short-Circuit	Internal armature short-circuit
IBN	Inbetriebnahme	Commissioning
ID	Identifier	Identification
IE	Industrial Ethernet	Industrial Ethernet
IEC	International Electrotechnical Commission	International Electrotechnical Commission
IF	Interface	Interface
IGBT	Insulated Gate Bipolar Transistor	Bipolar transistor with insulated control electrode
IGCT	Integrated Gate-Controlled Thyristor	Semiconductor power switch with integrated control electrode

Abbreviation	Source of the abbreviation	Meaning
IL	Impulslöschung	Pulse suppression
IP	Internet Protocol	Internet Protocol
IPO	Interpolator	Interpolator
IT	Isolé Terre	Non-grounded three-phase line supply
IVP	Internal Voltage Protection	Internal voltage protection
J		
JOG	Jogging	Jog
K		
KDV	Kreuzweiser Datenvergleich	Crosswise data comparison
KHP	Know-how protection	Know-how protection
KIP	Kinetische Pufferung	Kinetic buffering
Kp	-	Proportional gain
KTY	-	Special temperature sensor
L		
L	-	Symbol for inductance
LED	Light Emitting Diode	Light emitting diode
LIN	Linearmotor	Linear motor
LR	Lageregler	Position controller
LSB	Least Significant Bit	Least significant bit
LSC	Line-Side Converter	Line-side converter
LSS	Line-Side Switch	Line-side switch
LU	Length Unit	Length unit
FO cable	Lichtwellenleiter	Fiber-optic cable
M		
M	-	Symbol for torque
M	Masse	Reference potential for all signal and operating voltages, usually defined as 0 V (also referred to as GND)
MB	Megabyte	Megabyte
MCC	Motion Control Chart	Motion Control Chart
MDI	Manual Data Input	Manual data input
MDS	Motor Data Set	Motor data set
MLFB	Maschinenlesbare Fabrikatebezeichnung	Machine-readable product code
MM	Motor Module	Motor Module
MMC	Man-Machine Communication	Man-machine communication
MMC	Micro Memory Card	Micro memory card
MSB	Most Significant Bit	Most significant bit
MSC	Motor-Side Converter	Motor-side converter
MSCY_C1	Master Slave Cycle Class 1	Cyclic communication between master (class 1) and slave

Abbreviation	Source of the abbreviation	Meaning
MSC	Motorstromrichter	Motor-side converter
MT	Messtaster	Probe
N		
N. C.	Not Connected	Not connected
N…	No Report	No report or internal message
NAMUR	Normenarbeitsgemeinschaft für Mess- und Regeltechnik in der chemischen Industrie	Standardization association for measurement and control in chemical industries
NC	Normally Closed (contact)	NC contact
NC	Numerical Control	Numerical control
NEMA	National Electrical Manufacturers Association	Standardization body in the US
NM	Nullmarke	Zero mark
NO	Normally Open (contact)	NO contacts
LSC	Netzstromrichter	Line-side converter
NVRAM	Non-Volatile Random Access Memory	Non-volatile read/write memory
O		
OA	Open Architecture	Software component (technology package) which provides additional functions for the SINAMICS drive system
OAIF	Open Architecture Interface	Version of the SINAMICS firmware from which the OA-application can be used
OASP	Open Architecture Support Package	Expands the STARTER commissioning tool by the corresponding OA-application
OC	Operating Condition	Operating condition
OEM	Original Equipment Manufacturer	Original equipment manufacturer
OLP	Optical Link Plug	Bus connector for fiber-optic cable
OMI	Option Module Interface	Option Module Interface
P		
p…	-	Adjustable parameters
P1	Processor 1	CPU 1
P2	Processor 2	CPU 2
PB	PROFIBUS	PROFIBUS
PcCtrl	PC Control	Master control
PD	PROFIdrive	PROFIdrive
PDS	Power unit Data Set	Power unit data set
PE	Protective Earth	Protective ground
PELV	Protective Extra Low Voltage	Safety extra-low voltage
PEM	Permanenterregter Synchronmotor	Permanent-magnet synchronous motor
PG	Programmiergerät	Programming device
PI	Proportional Integral	Proportional integral
PID	Proportional Integral Differential	Proportional integral differential
PLC	Programmable Logical Controller	Programmable logic controller

Abbreviation	Source of the abbreviation	Meaning
PLL	Phase-Locked Loop	Phase-locked loop
PM	Power Module	Power Module
PN	PROFINET	PROFINET
PNO	PROFIBUS Nutzerorganisation	PROFIBUS user organization
PPI	Point to Point Interface	Point-to-point interface
PRBS	Pseudo Random Binary Signal	White noise
PROFIBUS	Process Field Bus	Serial data bus
PS	Power Supply	Power supply
PSA	Power Stack Adapter	Power Stack Adapter
PTC	Positive Temperature Coefficient	Positive temperature coefficient
PTP	Point To Point	Point-to-point
PWM	Pulse Width Modulation	Pulse width modulation
PZD	Prozessdaten	Process data
Q		
R		
r…	-	Display parameters (read only)
RAM	Random Access Memory	Read/write memory
RCCB	Residual Current Circuit Breaker	Residual current operated circuit breaker
RCD	Residual Current Device	Residual current operated circuit breaker
RCM	Residual Current Monitor	Residual current monitor
RFG	Ramp-Function Generator	Ramp-function generator
RJ45	Registered Jack 45	Term for an 8-pin socket system for data transmission with shielded or non-shielded multi-wire copper cables
RKA	Rückkühlanlage	Cooling unit
RLM	Renewable Line Module	Renewable Line Module
RO	Read Only	Read only
ROM	Read-Only Memory	Read-only memory
RPDO	Receive Process Data Object	Receive Process Data Object
RS232	Recommended Standard 232	Interface standard for cable-connected serial data transmission between a sender and receiver (also known as EIA232)
RS485	Recommended Standard 485	Interface standard for a cable-connected differential, parallel, and/or serial bus system (data transmission between a number of senders and receivers, also known as EIA485)
RTC	Real Time Clock	Realtime clock
RZA	Raumzeigerapproximation	Space vector approximation
S		
S1	-	Continuous duty
S3	-	Intermittent duty
SAM	Safe Acceleration Monitor	Safe acceleration monitoring

Abbreviation	Source of the abbreviation	Meaning
SBC	Safe Brake Control	Safe brake control
SBH	Sicherer Betriebshalt	Safe operating stop
SBR	Safe Brake Ramp	Safe brake ramp monitoring
SBT	Safe Brake Test	Safe brake test
SCA	Safe Cam	Safe cam
SD Card	SecureDigital Card	Secure digital memory card
SDI	Safe Direction	Safe motion direction
SE	Sicherer Software-Endschalter	Safe software limit switch
SG	Sicher reduzierte Geschwindigkeit	Safely-limited speed
SGA	Sicherheitsgerichteter Ausgang	Safety-related output
SGE	Sicherheitsgerichteter Eingang	Safety-related input
SH	Sicherer Halt	Safe standstill
SI	Safety Integrated	Safety Integrated
SIL	Safety Integrity Level	Safety Integrity Level
SLM	Smart Line Module	Smart Line Module
SLP	Safely-Limited Position	Safely-limited position
SLS	Safely-Limited Speed	Safely-limited speed
SLVC	Sensorless Vector Control	Vector control without encoder (sensorless)
SM	Sensor Module	Sensor Module
SMC	Sensor Module Cabinet	Sensor Module Cabinet
SME	Sensor Module External	Sensor Module External
SMI	SINAMICS Sensor Module Integrated	SINAMICS Sensor Module Integrated
SMM	Single Motor Module	Single Motor Module
SN	Sicherer Software-Nocken	Safe software cam
SOS	Safe Operating Stop	Safe operating stop
SP	Service Pack	Service pack
SP	Safe Position	Safe position
SPC	Setpoint Channel	Setpoint channel
SPI	Serial Peripheral Interface	Serial peripheral interface
SPS	Speicherprogrammierbare Steuerung	Programmable logic controller
SS1	Safe Stop 1	Safe stop 1 (monitored for time and ramping up)
SS2	Safe Stop 2	Safe Stop 2
SSI	Synchronous Serial Interface	Synchronous serial interface
SSM	Safe Speed Monitor	Safe feedback from speed monitor
SSP	SINAMICS Support Package	SINAMICS support package
STO	Safe Torque Off	Safe torque off
STW	Steuerwort	Control word

Abbreviation	Source of the abbreviation	Meaning
T		
TB	Terminal Board	Terminal board
TIA	Totally Integrated Automation	Totally Integrated Automation
TM	Terminal Module	Terminal Module
TN	Terre Neutre	Grounded three-phase line supply
Tn	-	Integral time
TPDO	Transmit Process Data Object	Transmit process data object
TT	Terre Terre	Grounded three-phase line supply
TTL	Transistor-Transistor-Logic	Transistor-transistor logic
Tv	-	Rate time
U		
UL	Underwriters Laboratories Inc.	Underwriters Laboratories Inc.
UPS	Uninterruptible Power Supply	Uninterruptible power supply
UPS	Unterbrechungsfreie Stromversorgung	Uninterruptible power supply
UTC	Universal Time Coordinated	Universal time coordinated
V		
VC	Vector Control	Vector control
Vdc	-	DC-link voltage
VdcN	-	Partial DC link voltage, negative
VdcP	-	Partial DC link voltage, positive
VDE	Verband Deutscher Elektrotechniker	Verband Deutscher Elektrotechniker [Association of German Electrical Engineers]
VDI	Verein Deutscher Ingenieure	Verein Deutscher Ingenieure [Association of German Engineers]
VPM	Voltage Protection Module	Voltage Protection Module
Vpp	Volt peak to peak	Volt peak to peak
VSM	Voltage Sensing Module	Voltage Sensing Module
W		
WEA	Wiedereinschaltautomatik	Automatic restart
WZM	Werkzeugmaschine	Machine tool
X		
XML	Extensible Markup Language	Extensible markup language (standard language for web publishing and document management)
Y		
Z		
ZK	DC Link	DC Link
ZM	Zero Mark	Zero mark
ZSW	Status word	Status word

A.2 Documentation overview

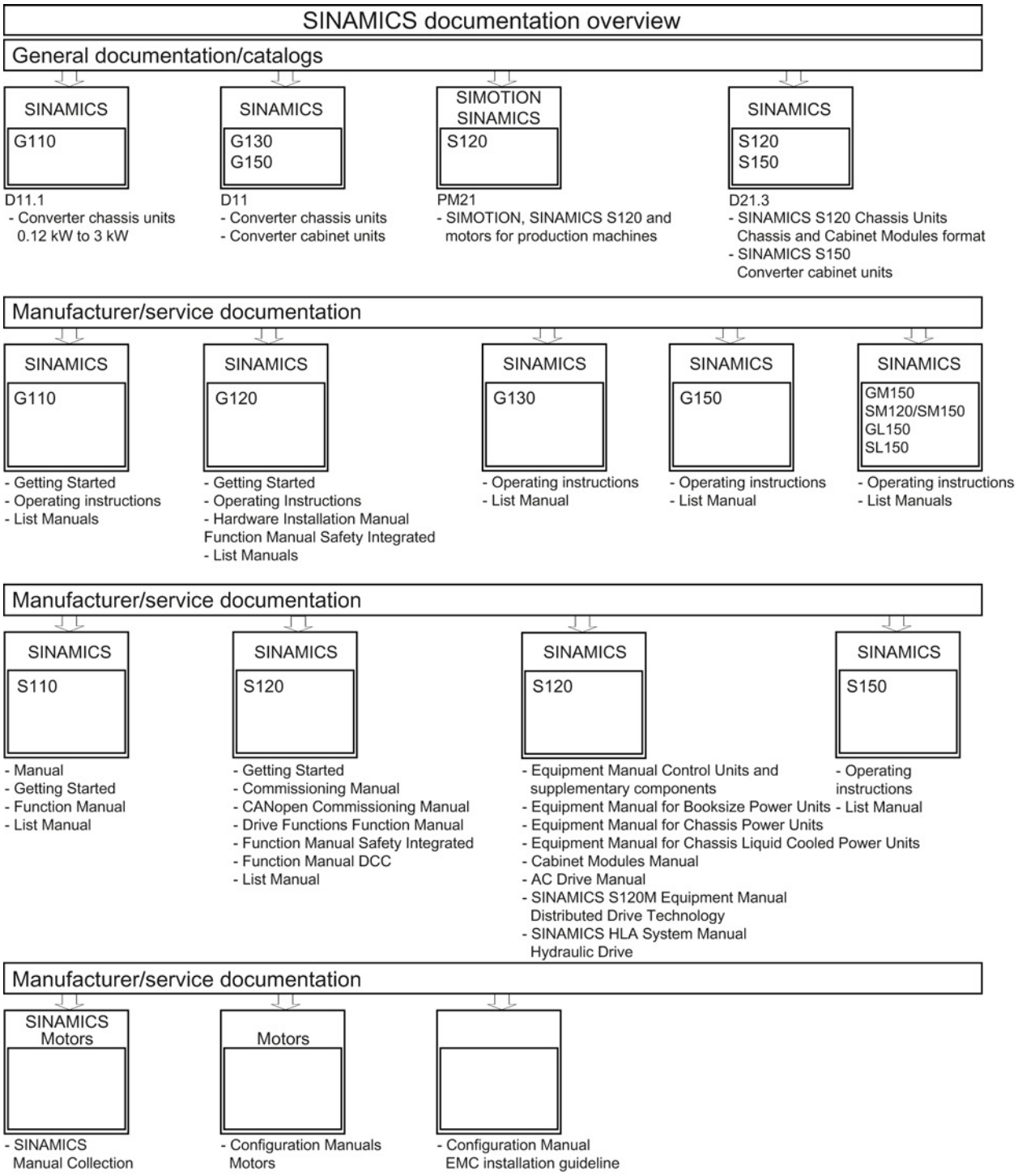

Index

2

24 V power consumption, 425
24 V power supply, 422
24 VDC overvoltage protection, 423, 424

A

Ambient temperature, 36
Auto-transformers, 82

B

Basic Operator Panel BOP20, 334
Bearings, 36
Braking Modules, 192
Braking resistors in blocksize format, 179
Braking resistors, Chassis, 204

C

Cable Installation, 420
Characteristics
- Chassis braking resistors duty cycle, 209
- Duty cycles Blocksize PM240-2 Power Modules, 117
- Duty cycles for braking resistors in Blocksize format, 191
- Duty cycles PM340 Blocksize Power Modules, 154
- Duty cycles Power Modules, chassis format, 174

Circuit-breaker, 41
Components
- Basic Operator Panel BOP20, 334
- Braking Modules, 192
- Braking resistors in blocksize format, 179
- Braking resistors, Chassis, 204
- Control Unit Adapter CUA31, 316
- Control Unit Adapter CUA32, 323
- Control Unit CU310-2 DP, 288
- Control Unit CU310-2 PN, 262
- DRIVE-CLiQ cabinet bushing, 391
- DRIVE-CLiQ coupling, 398
- dV/dt filter compact plus Voltage Peak Limiter Chassis, 247
- dV/dt filter plus Voltage Peak Limiter Chassis, 239
- Line filter, 44
- Line reactors, 56
- Motor reactors Chassis, 231
- Motor reactors, Blocksize, 211
- Mounting frame, 401
- PM240-2 Blocksize Power Modules, 88
- Power Modules Chassis, 159
- Power Modules PM340 blocksize, 121
- Safe Brake Adapter, 384
- Safe Brake Relay, 378
- Sensor Module Cabinet-Mounted SMC10, 343
- Sensor Module Cabinet-Mounted SMC20, 352
- Sensor Module Cabinet-Mounted SMC30, 360
- Shield connection kit, 404
- Sine-wave filter, chassis, 235

Connection
- Braking Modules Chassis, 196
- Braking resistors in Blocksize format, 181
- Braking resistors, Chassis, 208
- Control Unit Adapter CUA32, 329
- Control Unit CU310-2 PN, 281
- CU310-2 DP Control Unit, 308
- CUA31 Control Unit adapter, 320
- dV/dt filter compact plus Voltage Peak Limiter Chassis, 252
- dV/dt filter plus Voltage Peak Limiter Chassis, 243
- Line reactors, 71
- Motor reactors, Blocksize, 227
- PM240-2 Blocksize Power Modules, 93
- PM340 Blocksize Power Modules, 130
- Power Modules Chassis, 162
- Safe Brake Adapter, 389
- Safe Brake Relay, 380

Control cabinet design, 417
Control Unit Adapter CUA31, 316
Control Unit Adapter CUA32, 323
Control Unit CU310-2 DP, 288
Control Unit CU310-2 PN, 262

D

Derating, 37
- For Chassis Power Modules, 176
- for PM240-2 Power Modules, 119
- For PM340 Power Modules, 156

Diagnostics via LEDs
- Sensor Module Cabinet SMC10, 347
- Sensor Module Cabinet SMC20, 356

Sensor Module Cabinet SMC30, 369
Dimension drawings
Blocksize line filter, 51
Blocksize line reactors, 60
Braking resistors in Blocksize format, 182
Braking resistors, Chassis, 207
Chassis line filter, 52
Chassis line reactors, 63
Control Unit Adapter CUA31, 321
Control Unit Adapter CUA32, 331
Control Unit CU310-2 DP, 314
Control Unit CU310-2 PN, 286
DRIVE-CLiQ cabinet bushing, 393
DRIVE-CLiQ coupling, 399
dV/dt filter compact plus Voltage Peak Limiter Chassis, 253
dV/dt reactor, 244
Motor reactors Chassis, 233
Motor reactors, blocksize, 216
Mounting frame, 402
PM240-2 Blocksize Power Modules, 95
PM340 Blocksize Power Modules, 135
Power Modules Chassis, 168
Power Modules with Screening Kit, frame sizes FSA to FSF, 407
Safe Brake Adapter, 389
Safe Brake Relay, 381
Screening Kit, frame sizes FSA to FSC, 405
Sensor Module Cabinet SMC10, 348
Sensor Module Cabinet SMC20, 357
Sensor Module Cabinet SMC30, 370
Sine-wave filter, chassis, 237
Voltage peak limiter, 245
DRIVE-CLiQ cabinet bushing, 391
DRIVE-CLiQ coupling, 398
DRIVE-CLiQ signal cables, 427
Combined use of MC500 and MC800 PLUS, 432
Properties, 431
dV/dt filter compact plus Voltage Peak Limiter Chassis, 247
dV/dt filter plus Voltage Peak Limiter Chassis, 239

E

EMC category, 44
EMC Directive, 419
EMC environment, 44
Equipotential bonding, 438

F

Forming the DC-link capacitors, 480
Fuse, 41

H

Heat dissipation, 443

I

Installation
DRIVE-CLiQ cabinet bushing, 395
DRIVE-CLiQ cabinet bushing M12, 396
DRIVE-CLiQ coupling, 399
Sensor Module Cabinet, 349, 358, 371
Installation altitude, 36
Interface descriptions
Basic Operator Panel BOP20, 334
Control Unit Adapter CUA32, 324
Control Unit CU310-2 PN, 263
CU310-2 DP Control Unit, 289
CUA31 Control Unit adapter, 317
DRIVE-CLiQ cabinet bushing, 392
DRIVE-CLiQ cabinet bushing M12, 392
DRIVE-CLiQ coupling, 398
dV/dt filter compact plus Voltage Peak Limiter Chassis, 251
dV/dt filter plus Voltage Peak Limiter Chassis, 242
PM240-2 Blocksize Power Modules, 91
PM340 Blocksize Power Modules, 124
Power Modules Chassis, 160
Safe Brake Adapter, 386
Safe Brake Relay, 379
Sensor Module Cabinet SMC10, 343
Sensor Module Cabinet SMC20, 352
Sensor Module Cabinet SMC30, 360
Isolating transformer, 83
IT system, 76

L

Layout of the components, 440
LEDs
Control Unit Adapter CUA32, 330
Control Unit CU310-2 DP, 310
Control Unit CU310-2 PN, 283
CUA31 Control Unit adapter, 321
Sensor Module Cabinet SMC10, 347
Sensor Module Cabinet SMC20, 356
Sensor Module Cabinet SMC30, 369

Line connection voltage, 35
Line contactor, 43
Line disconnector, 40
Line filter, 44
Line frequency, 35
Line reactors, 56

M

Motor reactors Chassis, 231
Motor reactors, Blocksize, 211
Mounting
  Base components, 441
  Basic Operator Panel BOP20, 337
  Braking Modules Chassis, 200
  Braking resistors in Blocksize format, 186
  Control Unit, 332
  Control Unit Adapter, 332
  Ferrite core for size FSB/FSC, 413
  Line filter, 53
  Line reactors, 64
  Motor reactors, blocksize, 221
  Mounting frame, 403
  PM240-2 Blocksize Power Modules, 103
  PM340 Blocksize Power Modules, 142
  Safe Brake Adapter, 390
  Safe Brake Relay, 382
  Shield connection kit, frame size FSA, 412
  Shield connection kit, frame size FSB/FSC, 413
  Shield connection kit, frame size FSD/FSE, 414
  Shield connection kit, frame size FSF, 414
Mounting frame, 401

O

Overcurrent protection, 41
Overvoltage category, 35
Overvoltage protection, 42

P

PE terminal, 438
Platform Concept, 31
PM240-2 Blocksize Power Modules, 88
Pollution degree, 35
Power cables, 433
Power loss, 447
  Control Unit Adapter, 447
  Control Units, 447
  Line reactors and line filters, 448
  Power Modules, 450
  Sensor Modules, 447
Power Modules Chassis, 159
Power Modules PM340 blocksize, 121
Power Supply Units, 426
Protection class, 36
Protective connection, 438

R

RCD, 41
RCM, 42
Replacement
  Control Interface Module, frame size FX, 472
  Control Interface Module, frame size GX, 474
  CU310-2 fan, 455
  Fan, frame size FX, 476
  Fan, frame size GX, 478
  PM240-2 fan, 456
  PM340 fan, 457
  Power block (type FX), 466
  Power block type GX, 469
Replacing components, 454
Replacing the fan
  CU310-2, 455
  Frame size FX, 476
  Frame size GX, 478
  PM240-2, 456
  PM340, 457
Residual current monitor, 42
Residual current operated circuit-breakers (RCD), 41

S

Safe Brake Adapter, 384
Safe Brake Relay, 378
Safety guidelines
  Control cabinet design, 418
  Control Units, 260
  dV/dt filter compact plus Voltage Peak Limiter Chassis, 247
Safety instructions
  Braking Modules Chassis, 193
  Braking resistors in Blocksize format, 179
  Braking resistors, Chassis, 204
  dV/dt filter plus Voltage Peak Limiter Chassis, 239
  Line filter, 47
  Line reactors, 56
  Motor reactors, 211, 231
  PM240-2 Blocksize Power Modules, 90
  Power Modules, 85
  Power Modules Blocksize, 123

Power Modules Chassis, 159
Safe Brake Adapter, 385
Safe Brake Relay, 378
Sensor Modules Cabinet-Mounted, 341
Service and maintenance, 453
Sine-wave filter, Chassis, 235
Screw terminals, 437
Sensor Module Cabinet-Mounted SMC10, 343
Sensor Module Cabinet-Mounted SMC20, 352
Sensor Module Cabinet-Mounted SMC30, 360
Service and maintenance, 454
Setting the PROFIBUS address
CU310-2 DP, 291
Shield connection kit, 404
Shielding, 420
Short-circuit current rating, 35
Sine-wave filter, chassis, 235
Single Phase Grounded Midpoint, 81
Spare parts, 484
Specification of encoder systems and encoders
Sensor Module Cabinet SMC30, 374
Spring-loaded terminals, 437

T

Technical data
Blocksize line filter, 54
Blocksize line reactors, 72
Braking Modules Chassis, 203
Braking resistors in Blocksize format, 187
Braking resistors, Chassis, 208
Chassis line filter, 55
Chassis line reactors, 75
Control Unit Adapter CUA32, 331
Control Unit CU310-2 PN, 287
CU310-2 DP Control Unit, 315
CUA31 Control Unit adapter, 322
DRIVE-CLiQ cabinet bushings, 397
DRIVE-CLiQ coupling, 400
dV/dt filter compact plus Voltage Peak Limiter, 255
dV/dt filter plus Voltage Peak Limiter Chassis, 246
Motor reactors Chassis, 234
Motor reactors, blocksize, 228
PM240-2 Blocksize Power Modules, 106
PM340 Blocksize Power Modules, 145
Power Modules Chassis, 172
Safe Brake Adapter, 390
Safe Brake Relay, 383
Sensor Module Cabinet SMC10, 350
Sensor Module Cabinet SMC20, 359
Sensor Module Cabinet SMC30, 373
Sine-wave filter, chassis, 238
TN line system, 76
Totally Integrated Automation, 31
Transport, 36
TT system, 76

V

Ventilation, 445
Ventilation clearances, 443
PM240-2 Blocksize Power Modules, 90
PM340 Blocksize Power Modules, 123
Power Modules Chassis, 159

Siemens AG
Industry Sector
Drive Technologies
Motion Control Systems
Postfach 3180
91050 ERLANGEN
GERMANY

Subject to change without prior notice
© Siemens AG 2006 - 2014

www.siemens.com/motioncontrol