APPLICATION MANUAL

F5 MULTI SERVO

KEB COMBIVERT **F5-A,-E,-H 4.2**

KEB

Art.Nr.: 00.F5.AEA-K420

Stand 05/2009

Table of Contents

1. Introduction	Table of contents 1
2. Summary	Notes and use conditions of the KEB COMBIVERT.
3. Hardware	Description of the controls.
4. Operation	The basic operation of the KEB COMBIVERT like password input, parameter and set selection.
5. Selection of Operating Mode	Operating modes of the KEB COMBIVERT
6. Start-up	Gives support with regard to the initial start-up and shows possibilities and techniques for the optimization of the drive.
7. Functions	To make the programming easier all inverter functions and the parameters belonging to it are comprised in this chapter.
8. Error Assistance	Avoidance of errors, evaluation of error messages and elimination of the causes.
9. Project Design	Serves for support of the drive design.
10. Networks	Survey of the possible interconnection of the KEB COMBIVERT in existing networks.
11. Parameter Overview	A list of all parameters classified according to parameter groups. The parameter description comprises adresses, value ranges and references with regard to the functions for which they are used.
12. Annex	Keyword index

Table of Contents

1. Table of Contents 1.1-5

2. Summary 2.1-3

2.1 Product description 2.1-3
2.1.1 Features of KEB COMBIVERT 2.1-3
2.1.2 Function principle 2.1-3
2.1.3 Application as directed 2.1-4
2.1.4 Type code 2.1-5

3. Hardware 3.1-3

3.1 Control units 3.1-3
3.1.1 Terminal strip X2A 3.1-3
3.1.2 Connection of the control 3.1-4
3.1.3 Digital inputs 3.1-4
3.1.4 Analog inputs 3.1-5
3.1.5 Voltage input / external power supply 3.1-5

4. Operation 4.1-3

4.1 Fundamentals 4.1-3
4.1.1 Parameter, parameter groups, parameter sets 4.1-3
4.1.2 Selection of a parameter 4.1-4
4.1.3 Adjustment of parameter value 4.1-4
4.1.4 ENTER-parameter 4.1-5
4.1.5 Non-programmable parameters 4.1-5
4.1.6 Resetting of error messages 4.1-5
4.1.7 Resetting of peak values 4.1-5
4.1.8 Acknowledgement of status signals 4.1-5

4.2 Password structure 4.2-3
4.2.1 Password levels 4.2-3
4.2.2 Passwords 4.2-4
4.2.3 Changing of password level 4.2-5

5. Selection of Operating Mode 5.1-3

6. Start-up 6.1-3

6.1 Preparatory measures 6.1-3
6.1.1 After unpacking the goods 6.1-3
6.1.2 Installation and connection 6.1-3
6.1.3 Checklist prior to start-up 6.1-4

6.2 Initial start-up 6.2-3
6.2.1 Start-up of an asynchronous motor 6.2-3
6.2.1.1 V/F characteristic operation 6.2-4
6.2.1.2 Vector controlled operation with encoder feedback without motor model 6.2-6
6.2.1.3 Vector controlled operation with encoder feedback with motor model 6.2-8
6.2.1.4 Start-up F5H-M (ASCL/ vector controlled without encoder feedback with motor model) 6.2-11
6.2.2 Start-up of a synchronous motor 6.2-15

6.2.2.1 Start-up F5A-S 6.2-15
6.2.2.2 Start-up F5E-S (SCL) 6.2-17

7. Functions 7.1-3

7.1 Operating and appliance date 7.1-3
7.1.1 Overview of the ru-parameters 7.1-3
7.1.2 Overview of the In-Parameters 7.1-4
7.1.3 Overview of the Sy-parameters 7.1-4
7.1.4 Explanation to Parameter Description 7.1-5
7.1.5 Description of the ru-Parameters 7.1-5
7.1.7 Description of the Sy (System) - Parameters 7.1-20

7.2 Analog in- and outputs I 7.2-3
7.2.1 Summary description analog inputs 7.2-3
7.2.2 Interface selection 7.2-4
7.2.2.1 AN1 / AN2 (An.00, An.10) 7.2-4
7.2.2.2 AN3 (An.20) 7.2-5
7.2.3 Noise filter (An.01, An.11, An.21) 7.2-5
7.2.4 Save mode (An.02, An.12, An.22) 7.2-5
7.2.4.1 Input selection (An.03, An.13, An.23) 7.2-6
7.2.5 Zero clamp (An.04, An.14, An.24) 7.2-7
7.2.6 Gain of the input characteristics (An.05...07, An.15...17, An.25...27) 7.2-8
7.2.7 Lower and upper limit (An.08, An.09, An.18, An.19, An.28, An.29) 7.2-10
7.2.8 Selection REF input / AUX-function (An.30) 7.2-11
7.2.9 Brief description analog outputs 7.2-12
7.2.10 Output signals 7.2-13
7.2.11 Analog output / display (ru.33...34 / ru.35...36) 7.2-13
7.2.12 ANOUT 1/ -2/-3/-4/ function (An.31 / An.36 / An.41, An.47) 7.2-14
7.2.13 Gain of Output Characteristic (An.33...35 / An.38...40 / An.43...45 / An.49...51) 7.2-15
7.2.14 ANOUT 1...4 digitale setting (An.32 / 37 / 42 / 48) 7.2-16

7.3 Digital in- and outputs 7.3-3
7.3.1 Summary description digital inputs 7.3-3
7.3.2 Input signals PNP / NPN selection (di.00) 7.3-4
7.3.3 Setting of digital inputs by software (di.01, di.02) 7.3-5
7.3.4 Input terminal state (ru.21), internal input state (ru.22) 7.3-6
7.3.5 Digital noise filter (di.03), fast dig. noise filter (di.23) 7.3-6
7.3.6 Input logic (di.04) 7.3-6
7.3.7 Input trigger (di.05) 7.3-6
7.3.8 Strobe-dependent inputs (di.06, di.07, di.08) 7.3-7
7.3.10 Error reset / input selection and edge evaluation (di.09 / di.10) 7.3-8
7.3.11 Assignment of the inputs 7.3-9
7.3.12 Software ST and locking of the control release 7.3-12
7.3.13 Deactivation of the digital control release 7.3-12
7.3.14 Summary description digital outputs 7.3-13
7.3.15 Output signals / hardware 7.3-14
7.3.16 Output filter (do.43, do.44) 7.3-14
7.3.17 Switching conditions (do.00...do.07) 7.3-15

7.3.18 Inverting of switching conditions for flags 0...7 (do.08...do.15) ..... 7.3 - 20
7.3.19 Selection of switching conditions for flags 0...7 (do.16...do.23) ..... 7.3 - 20
7.3.20 Linking the switching conditions for flags (do.24) ..... 7.3 - 21
7.3.21 Inverting of flags (do.25...do.32) ..... 7.3 - 21
7.3.22 Selection of flags (do.33...do.40) ..... 7.3 - 22
7.3.23 Linking the flags(do.41) ..... 7.3 - 22
7.3.24 Output terminal state (ru.25) and digital output state (ru.80) ..... 7.3 - 23
7.3.25 Hardware output allocation (do.51) ..... 7.3 - 23
7.3.26 Programming example ..... 7.3 - 24

7.4 Setpoint-, rotation- and ramp adjustment ..... 7.4 - 3
7.4.1 Summary description ..... 7.4 - 3
7.4.2 Reference source oP.00 ..... 7.4 - 4
7.4.3 Rotation source oP.01 ..... 7.4 - 7
7.4.4 Fixed frequencies (oP.18...23) ..... 7.4 - 11
7.4.5 Setpoint limits ..... 7.4 - 13
7.4.6 Setpoint calculation ..... 7.4 - 15
7.4.7 Ramp generator ..... 7.4 - 16
7.4.7.1 Acc dec mode ..... 7.4 - 16
7.4.7.2 Ramp with constant ascent ..... 7.4 - 17
7.4.7.3 Ramp with constant time ..... 7.4 - 19
7.4.7.4 Ogive run ..... 7.4 - 20
7.4.7.5 Time factor acceleration/deceleration (oP.62) ..... 7.4 - 21
7.4.8 Acc dec mode ..... 7.4 - 22
7.4.8.1 Ramp with constant ascent ..... 7.4 - 22
7.4.8.2 Ramp with constant time ..... 7.4 - 22

7.5 Motor data and controller adjustments of the asynchronous motor ..... 7.5 - 3
7.5.1 Open loop operation (V/F characteristic) ..... 7.5 - 4
7.5.1.1 Rated frequency (uF.00), boost (uF.01) and delta boost (uF.04 / uF.05) ..... 7.5 - 4
7.5.1.2 Maximum voltage mode (uF.10) ..... 7.5 - 5
7.5.1.3 Additional rated point (uF.02/uF.03) ..... 7.5 - 5
7.5.1.4 Voltage stabilization (uF.09) ..... 7.5 - 6
7.5.1.5 Carrier frequency (uF.11) ..... 7.5 - 7
7.5.1.6 Energy saving mode (uF.06...08) ..... 7.5 - 7
7.5.1.7 SMM (sensorless motor management) ..... 7.5 - 8
7.5.2 Vector controlled operation ..... 7.5 - 12
7.5.2.1 Initial settings ..... 7.5 - 12
7.5.2.2 Vector controlled operation without motor model ..... 7.5 - 14
7.5.2.3 Vector controlled operation with motor model (with encoder feedback) ..... 7.5 - 16
7.5.2.4 Vector control without speed feedback (ASCL) ..... 7.5 - 23
7.5.2.5 Special function: Rotor adaption ..... 7.5 - 28
7.5.3 Block diagram ..... 7.5 - 29

7.6 Motor data and controller adjustments of the synchronous motor ..... 7.6 - 3
7.6.1 Initial settings ..... 7.6 - 3
7.6.1.1 Motor name plate ..... 7.6 - 3
7.6.1.2 Controller configuration ..... 7.6 - 4
7.6.1.3 Actual value source ..... 7.6 - 4
7.6.1.4 Load motor dependent parameter ..... 7.6 - 4
7.6.2 Speed-controlled operation with encoder feedback ..... 7.6 - 6
7.6.2.1 Controller Structure ..... 7.6 - 6
7.6.2.2 Absolute position (encoder 1) ..... 7.6 - 6

7.6.2.3 Speed measurement 7.6-7
7.6.3 Speed-controlled operation without encoder feedback (SCL) 7.6-8
7.6.3.1 General 7.6-8
7.6.3.2 Initial settings for sensorless operation 7.6-8
7.6.3.3 Identification of the motor data 7.6-8
7.6.3.4 Standstill and starting phase 7.6-13
7.6.3.5 Low speed 7.6-15
7.6.3.6 Motor model 7.6-16
7.6.3.7 Operation with sine-wave filter 7.6-18
7.6.4 Block diagram 7.6-19

7.7 Speed control 7.7-3
7.7.1. Speed controller parameters 7.7-3
7.7.1.1 Basic settings 7.7-3
7.7.1.2 Automatically adjustment of the speed controller (only at the operation with motor model) 7.7-3
7.7.1.3 Operating condition dependent control parameters 7.7-4
7.7.2. Determination of the mass moment of inertia 7.7-5
7.7.3. PT1 output filter 7.7-6
7.7.4. Acceleration dependent pre-control 7.7-6
7.7.4.1 Precontrol reach-through / smoothing 7.7-7
7.7.4.2 Setpoint smoothening 7.7-7

7.8 Torque display and -limiting 7.8-3
7.8.1 Maximum voltage controller, voltage limit 7.8-3
7.8.2 Physical torque limits ASM 7.8-4
7.8.2.1 Torque limits in the base speed range 7.8-4
7.8.2.2 Torque limits in the field weakening range 7.8-4
7.8.3 Physical torque limits DSM 7.8-5
7.8.3.1 Torque limits in the base speed range (dr.27, dr.15) 7.8-6
7.8.3.2 Torque limits in the field weakening range 7.8-6
7.8.4 Setting of the application-dependent torque limits 7.8-12
7.8.5 Display of the actual torque values and limits 7.8-13
7.8.6 Display of the torque-related motor workload (ru.90) 7.8-13
7.8.6.1 Mode 1: "Reference torque" Le 27 = 0 ..... 7.8-13
7.8.6.2 Mode 2: "Reference torque" Le 27 unequal 0 ..... 7.8-14

7.9 Torque control 7.9-3
7.9.1. Torque reference source 7.9-3
7.9.2. Rate of change torque reference 7.9-3
7.9.3. Speed calculation 7.9-4
7.9.4. Control mode 7.9-4
7.9.4.1 Mode 1: torque-controlled operation with emergency switching to speed control 7.9-4
7.9.4.2 Mode 2: torque-controlled operation with superimposed speed control 7.9-5

7.10 Current control, -limiting and switching frequencies 7.10-3
7.10.1 Current control 7.10-3
7.10.2. Current limit 7.10-4
7.10.3 Switching frequencies and derating 7.10-5
7.10.3.1 Switching frequency (uF.11, In.03, In.04, ru.45) 7.10-5

7.11 Speed measurement 7.11-3
7.11.1 Designs 7.11-3
7.11.2 Encoder interface channel 1 (X3A) 7.11-4

7.11.2.1 TTL incremental encoder input (standard at F5-M) ... 7.11-4
7.11.3 Encoder interface channel 2 (X3B) ... 7.11-6
7.11.3.2 Incremental encoder output ... 7.11-7
7.11.4 Voltage supply of encoder ... 7.11-8
7.11.5 Selection of encoder ... 7.11-8
7.11.6 Encoder identifier ... 7.11-10
7.11.7 Basic settings ... 7.11-11
7.11.8 Gear factor ... 7.11-12
7.11.8.1 Definition ... 7.11-12
7.11.8.2 Gear factor / analog setting ... 7.11-14
7.11.8.3 Gear factor / set-programming ... 7.11-15
7.11.9 Operation mode output ... 7.11-16
7.11.10 System offset (Ec.33 / Ec.34) ... 7.11-17
7.11.11 Further parameters / encoder ... 7.11-17
7.11.11.1 SSI encoder at channel 1 ... 7.11-17
7.11.11.2 SSI encoder at channel 2 ... 7.11-17
7.11.11.3 SSI position standardization channel 1 and 2 (Ec.41) ... 7.11-18
7.11.11.4 Tachometer at channel 2 ... 7.11-19
7.11.11.5 Evaluation intelligent interface ... 7.11-19
7.11-22
7.11.11.6 Encoder over gear (ec.39) ... 7.11-23

7.12 Positioning and synchronous control ... 7.12-4
7.12.1 Limit switch ... 7.12-4
7.12.1.1 Hardware limit switch ... 7.12-4
7.12.1.2 Software limit switch ... 7.12-4
7.12.2 Approach the reference point ... 7.12-4
7.12.2.1 Approach to reference point / modes ... 7.12-6
7.12.2.2 Approach to reference point / stopping point ... 7.12-8
7.12.2.3 Approach to reference point / stop at zero signal ... 7.12-8
7.12.2.4 Approach to reference point / no driving free ... 7.12-9
7.12.2.5 Approach to reference point / limit switch ... 7.12-9
7.12.2.6 Reference point / manual setting ... 7.12-11
7.12.2.7 Reference point / valid position ... 7.12-11
7.12.2.8 Approach to reference point / stop at index 0 ... 7.12-12
7.12.2.9 Approach to reference point with subsequent drive to zero signal ... 7.12-13
7.12.3 Synchronous mode ... 7.12-14
7.12.3.1 Synchronous mode / principle ... 7.12-14
7.12.3.2 Synchronous mode / premise ... 7.12-15
7.12.3.4 Synchronous mode / position normalisation ... 7.12-17
7.12.3.5 Synchronous mode / selection of operating mode ... 7.12-18
7.12.3.6 Synchronous mode / activation and synchronization ... 7.12-19
7.12.3.7 Gear factor ... 7.12-24
7.12.3.8 Angular correction ... 7.12-25
7.12.3.9 Angular reset ... 7.12-26
7.12.4 Posi mode ... 7.12-27
7.12.4.1 Selection of operating mode ... 7.12-27
7.12.4.2 Posi mode / principle ... 7.12-27
7.12.4.3 Posi mode / premise ... 7.12-29
7.12.4.4 Position normalisation ... 7.12-30
7.12.4.5 Posi mode / actual position ... 7.12-34
7.12.4.6 Posi mode / set and target position ... 7.12-34
7.12.4.7 Posi mode / single positioning ... 7.12-35
7.12.4.8 Posi mode / sequential positioning ... 7.12-37

7.12.4.9 Posi mode / Positioning with set changeover 7.12-50
7.12.4.10 Posi mode / rotary table 7.12-50
7.12.4.11 Posi mode / defined stop 7.12-56
7.12.4.12 Posi mode / remaining distance positioning 7.12-58
7.12.4.13 Posi mode / flying referencing with correction 7.12-59
7.12.4.14 Posi mode / start positioning 7.12-64
7.12.4.15 Posi mode / not reachable positions 7.12-68
7.12.4.16 Posi mode / stop positioning 7.12-70
7.12.4.17 Analog position setting 7.12-71
7.12.4.18 Analog position output 7.12-71
7.12.4.19 Target window 7.12-72
7.12.4.20 Position scan 7.12-72
7.12.4.21 Teach function 7.12-73
7.12.4.22 Functions and displays for the positioning mode 7.12-74
7.12.5 Contouring control mode 7.12-77
7.12.5.1 Contouring control mode / premises 7.12-77
7.12.5.2 Contouring control mode / settings 7.12-78
7.12.5.3 Contouring control mode / write / read data 7.12-78
7.12.5.4 Contouring control mode / speed precontrol 7.12-79
7.12.5.5 Contouring control mode / watchdog 7.12-79
7.12.5.6 Contouring control mode / example 7.12-79
7.12.6 Position controller 7.12-82

7.13 Protective Functions 7.13-3
7.13.1 Error and warning messages 7.13-3
7.13.1.1 Undervoltage 7.13-3
7.13.1.2 Overvoltage 7.13-4
7.13.1.3 Overcurrent 7.13-4
7.13.1.4 Overload 7.13-4
7.13.1.5 Inverter over temperature 7.13-5
7.13.1.6 External fault 7.13-5
7.13.1.7 Bus error 7.13-5
7.13.1.8 Limit switch error 7.13-6
7.13.1.9 Motor protection with temperature sensor 7.13-7
7.13.1.10 Software motor protection 7.13-7
7.13.1.11 Set selection error 7.13-7
7.13.1.12 Encoder interface / encoder error 7.13-8
7.13.1.13 Speed limit exceeded 7.13-8
7.13.1.14 Speed controller limit reached 7.13-9
7.13.1.15 Maximum acceleration exceeded 7.13-9
7.13.1.16 General power circuit error 7.13-9
7.13.2 Response to malfunction messages 7.13-10
7.13.2.1 Selection of the response 7.13-10
7.13.2.2 Parametrisation of the abnormal stopping 7.13-12
7.13.3 Automatic restart 7.13-15
7.13.3.1 Undervoltage error (E.UP) 7.13-15
7.13.3.2 Overvoltage error (E.OP) 7.13-15
7.13.3.3 Overcurrent error (E.OC) 7.13-16
7.13.3.4 Malfunction messages and pre-warnings 7.13-16
7.13.4 Base block 7.13-16
7.13.5 Quick Stop 7.13-17
7.13.5.1 Quick stop in the V/F characteristic operation 7.13-17
7.13.5.2 Quick stop at closed-loop systems 7.13-18
7.13.5.3 Time monitoring abnormal stopping 7.13-19
7.13.5.4 Abnormal stopping via control word 7.13-19

7.13.6 Speed search 7.13-20
7.13.6.1 Speed search in the open loop operation 7.13-20
7.13.6.2 Speed search at asynchronous motors in the closed-loop operation with encoder 7.13-20
7.13.6.3 Speed search at asynchronous motor in closed-loop operation without encoder(ASCL) 7.13-20
7.13.7 LAD-stop 7.13-21
7.13.7.1 Current-dependent ramp stop 7.13-21
7.13.7.2 DC link voltage-dependent ramp stop 7.13-21
7.13.7.3 Ramp stop dependent on a digital input 7.13-22
7.13.8 Current limit constant run (stall function) 7.13-22
7.13.8.1 Function of the current limit 7.13-24
7.13.9 Motor Protection Mode 7.13-25
7.13.10 Power-Off function 7.13-29
7.13.11 GTR7-Control 7.13-36
7.13.11.1 Activation via digital input 7.13-36
7.13.11.2 Adjustment of the activation threshold 7.13-36
7.13.11.3 Activation conditions 7.13-37
7.13.12 Special functions 7.13-37

7.14 Parameter sets 7.14-3
7.14.1 Non-programmable parameters 7.14-3
7.14.2 Security parameters 7.14-3
7.14.3 System Parameters 7.14-3
7.14.4 Indirect and direct set-addressing 7.14-4
7.14.5 Copying of parameter sets via keyboard (Fr.01) 7.14-4
7.14.6 Copying of parameter sets via bus (Fr.01, Fr.09) 7.14-5
7.14.7 Parameter set selection 7.14-8
7.14.8 Locking of parameter sets 7.14-12
7.14.9 Parameter set ON/OFF delay (Fr.05, Fr.06) 7.14-13

7.15 Special Functions 7.15-3
7.15.1 DC-braking 7.15-3
7.15.1.1 V/F characteristic control 7.15-5
7.15.1.2 Speed-controlled operation without feedback (ASCL) 7.15-5
7.15.2 Energy Saving Function 7.15-6
7.15.3 Motorpoti Function 7.15-7
7.15.4 Timer and Counter 7.15-10
7.15.5 Brake Control 7.15-13
7.15.5.1 Mode brake control 7.15-13
7.15.5.2 Monitoring of the brake control 7.15-14
7.15.5.3 Sequence of the brake control 7.15-14
7.15.5.4 Brake control / vector controlled 7.15-15
7.15.5.5 V/F characteristic controlled operation 7.15-17
7.15.7 Diameter correction 7.15-20
7.15.8 Analog Setting of Parameter Values 7.15-22
7.15.9 Register function 7.15-23
7.15.10 Technology controller 7.15-26
7.15.10.1 The PID controller 7.15-26
7.15.10.2 PID reference 7.15-28
7.15.10.3 PID actual value 7.15-29
7.15.10.4 Application examples 7.15-30

7.16 CP-parameter definition ..... 7.16 - 3
7.16.1 Survey ..... 7.16 - 3
7.16.2 Assignment of CP-parameters ..... 7.16 - 4
7.16.3 Example ..... 7.16 - 6
7.16.4 Display standardization ..... 7.16 - 7
7.16.5 Variable standardization ..... 7.16 - 10

8. Error Assistance ..... 8.1 - 3

8.1 Troubleshooting ..... 8.1 - 3
8.1.1 General ..... 8.1 - 3
8.1.2 Error messages and their causes ..... 8.1 - 3

9. Project Design ..... 9.1 - 3

9.1 General designs ..... 9.1 - 3
9.1.1 Control cabinet design calculation ..... 9.1 - 3
9.1.2 Design of braking resistors ..... 9.1 - 4
9.1.3 Cables and fuses ..... 9.1 - 6

10. Networks ..... 10.1 - 3

10.1 Network components ..... 10.1 - 3
10.1.1 Available hardware ..... 10.1 - 3
10.1.2 RS232-cable PC / operator 00.58.025-001D ..... 10.1 - 3
10.1.3 HSP5-cable / control board 00.F5.0C0-0010 ..... 10.1 - 4
10.1.4 Interface operator F5 00.F5.060-2000 ..... 10.1 - 4
10.1.5 Profibus-DP operator F5 00.F5.060-3000 ..... 10.1 - 5
10.1.6 InterBus operator F5 00.F5.060-4000 / 4001 ..... 10.1 - 6
10.1.7 CanOpen operator F5 00.F5.060-5010 / 5011 ..... 10.1 - 7
10.1.8 Sercos operator 00.F5.060-6000 ..... 10.1 - 8
10.1.9 Bus parameter ..... 10.1 - 9
10.1.9.1 Inverter address (SY.06) ..... 10.1 - 9
10.1.9.2 Baud rate ext. bus (SY.07) ..... 10.1 - 9
10.1.9.3 Baud rate int. bus (SY.11) ..... 10.1 - 9
10.1.9.4 Watchdog time (Pn.06) ..... 10.1 - 9
10.1.9.5 Response to E.bus (Pn.05) ..... 10.1 - 9
10.1.9.6 HSP5 Watchdog time (SY.09) ..... 10.1 - 10
10.1.9.7 Auto store (ud.05) ..... 10.1 - 10
10.1.9.8 Status- and control word ..... 10.1 - 10
10.1.9.9 Speed setting via bus ..... 10.1 - 13

11. Parameter Overview ..... 11.1 - 3

11.1 Parameter ..... 11.1 - 3
11.1.1 Parameter groups ..... 11.1 - 3
11.1.2 Parameter list F5-A, -E and -H ..... 11.1 - 5

12. Annex ..... 12.1 - 3

12.1 Search and find ..... 12.1 - 3
12.1.1 Keyword index ..... 12.1 - 3
12.1.2 KEB contact data ..... 12.1 - 11

1. Introduction
2. Summary
3. Hardware
4. Operation
5. Selection of Operating Mode
6. Initial Start-up
7. Functions
8. Error Assistance
9. Project Design
10. Networks
11. Parameter Overview
12. Annex

2

2.1 Product overview

2.1.1 Features of KEB COMBIVERT ..... 2.1 - 3
2.1.2 Function principle ..... 2.1 - 3
2.1.3 Application as directed ..... 2.1 - 4
2.1.4 Type code ..... 2.1 - 5

2. Summary

2.1 Product description

2.1.1 Features of KEB COMBIVERT

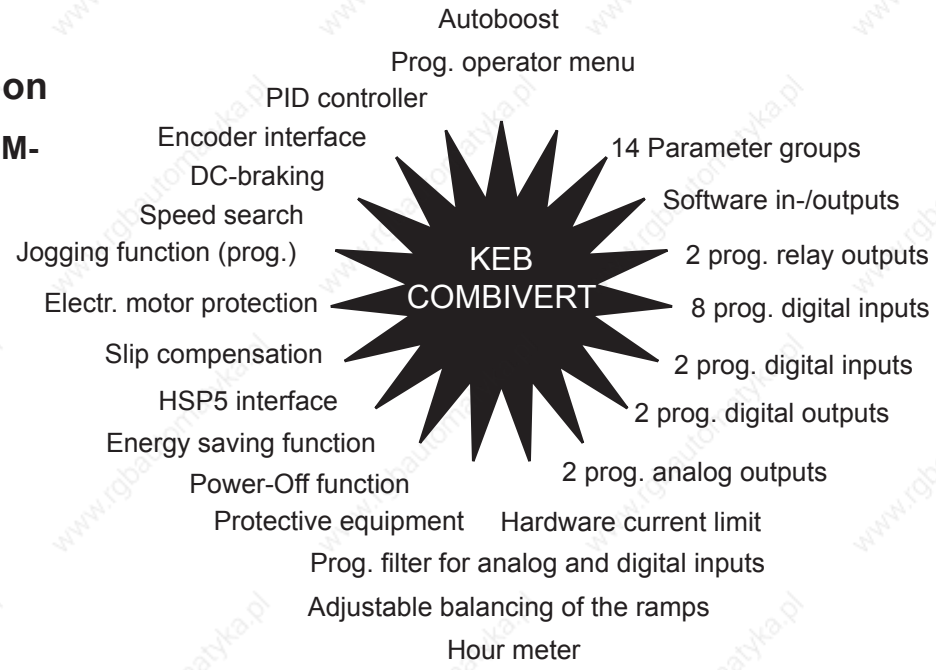

2.1.2 Function principle

The power circuit of a frequency inverter consists basically of a mains rectifier, the DC-link and an inverter at the output. The mains rectifier consists of an uncontrolled single or three-phase bridge connection, the single-phase design is restricted to small powers. It converts the AC-voltage of the mains into a DC-voltage, which is smoothed by the DC-link capacitor, thus in the ideal case (inverter unloaded) the DC-link is charged with a voltage of UZK = √2 UN.
Since during the charging of the DC-link capacitor very high currents flow for a short time which would lead to the tripping of the input fuses or even to the destruction of the mains rectifier, the charging current must be limited to a permissible level. This is achieved by using an inrush current limiting resistor in series to the capacitor. After the charging of the capacitor is completed the limiting resistor is bridged, for example, by a relay and is therefore only active at the switch-on of the inverter.
As the smoothing of the DC-link voltage requires a large capacity, the capacitor still has a high voltage for some time after the disconnection of the inverter from the mains.
The actual task of the frequency inverter, to produce an output voltage variable in frequency and amplitude for the control of the three-phase AC motor, is taken over by the converter at the output. It makes available a 3-phase output voltage according to the principle of the pulse-width modulation, which generates a sinusoidal current at the three-phase asynchronous motor.

Fig. 2.1.2 Block diagram of an inverter power circuit

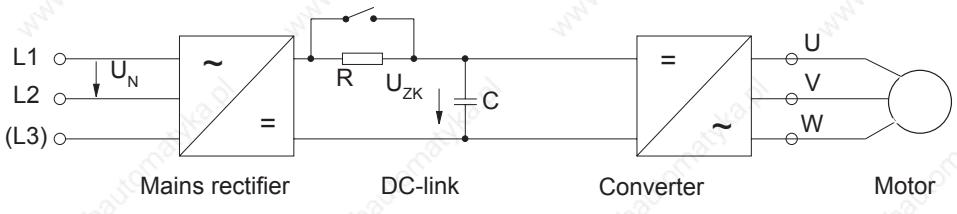

2.1.3 Application as directed

The KEB COMBIVERT is a frequency inverter with DC-voltage link. It works according to the principle of the pulse-width modulation and serves exclusively for the stepless speed control of three-phase AC motors.
The unit has been developed subject to the relevant safety standards and is manufactured with the highest demands on quality. Condition for an unobjectionable operation is the function-conform configuring of the drive and correct transport and storage as well as careful installation and connection.

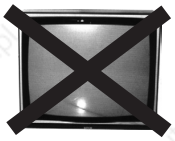

The operation of other electric consumers is prohibited and can lead to the destruction of the units as well as consequential damages as a result from it.

2.1.4 Type code

15.F5.A1E–35DA

At FI: Cooling
0: Standard
1: Flat rear
2: Water-cooled
3: Convection
4: Special fan

A-Z: As digits, varnished
A: 0 varnished (default)
B: 1 varnished (flat rear)
C: 2 varnished (water cooling)
D: 3 varnished (convection)
E: 4 varnished (special fan)

At Servos: Motor cooling
0: Self-cooling
1: External cooling

Encoder interface type see control part

0: no interface	5: resolver u. SSI	A: Inc. input a. Initiator	F: Hiperface a. Inc. outp.
1: Inc. input a. Inc. I/O	6: Hiperface a. SSI	B: resolver u. Initiator	G: Inc. input a. Inc. input.
2: resolver u. Inc. I/O	7: Inc. input a. Tacho	C: Hiperface a. Initiator	H: resolver u. Inc. input.
3: Hiperface a. Inc. I/O	8: resolver u. Tacho	D: Inc. inp. a. Inc. outp.	I: Hiperface a. Inc. inp.
4: Inc. input a. SSI	9: Hiperface a. Tacho	E: resolver u. Inc. output.	

At FI: Switching frequency / max. short time current / OC-tripping current

0: 2 kHz/125%/150%	5: 4 kHz/150%/180%	A: 8 kHz/180%/216%	F: 16 kHz/200%/240%
1: 4 kHz/125%/150%	6: 8 kHz/150%/180%	B: 16 kHz/180%/216%	G: 2 kHz/400%/480%
2: 8 kHz/125%/150%	7: 16 kHz/150%/180%	C: 2 kHz/200%/240%	H: 4 kHz/400%/480%
3: 16 kHz/125%/150%	8: 2 kHz/180%/216%	D: 4 kHz/200%/240%	I: 8 kHz/400%/480%
4: 2 kHz/150%/180%	9: 4 kHz/180%/216%	E: 8 kHz/200%/240%	K: 16 kHz/400%/480%

At Servos: Motor speed
1: 1500 rpm 2: 2000 rpm 3: 3000 rpm 4: 4000 rpm 6: rpm

Input identification

0: 1ph 230V AC/DC	5: 400V DC	A: 6ph 400V AC	
1: 3ph 230V AC/DC	6: 1ph 230V AC	z: 230V AC or AC/DC	
2: 1/3ph 230V AC/DC	7: 3ph 230V AC	Y: 400V AC or AC/DC	
3: 3ph 400V AC/DC	8: 1/3ph 230V AC	W: 230V DC	
4: 230V DC	9: 3ph 400V AC	V: 400V DC	

Housing type A, B, D, E, G, H, P, R, U, W

Accessory

0: without	4: PFC 2) integrated
1: GTR 7 [1]	5: GTR 7 1), PFC 2) integrated
2: integrated filter	6: integrated filter , integrated PFC 2)
3: GTR 7 [1], integrated filter	7: GTR 7 1), integrated filter, integrated PFC 2)

Control type
B: BASIC (controlled frequency inverter with standard function)
C: COMPACT (controlled frequency inverter with enhanced function)
G: GENERAL (controlled frequency inverter with enhanced function)
M: MULTI (regulated, field-oriented frequency inverter for three-phase asynchronous motors)
S: SERVO (regulated frequency inverter for synchronous motors)
A: APPLIKATION (special software, e.g. S.C.L. for synchronous motors, controlled open loop)

Series F5

At FI in the 1. and 2. place Digit: Inverter size
At servos: Motor identification / motor dimension wide

1) GTR 7: Braking transistor
2) PFC: Power factor control

1. Introduction
2. Summary
3. Hardware
4. Operation
5. Selection of Operating Mode
6. Initial Start-up
7. Functions
8. Error Assistance
9. Project Design
10. Networks
11. Parameter Overview
12. Annex

3.1 Control units

3.1.1 Terminal strip X2A ..... 3.1 - 3
3.1.2 Connection of the control ..... 3.1 - 4
3.1.3 Digital inputs ..... 3.1 - 4
3.1.4 Analog inputs ..... 3.1 - 5
3.1.5 Voltage input / external power supply ..... 3.1 - 5

3. Hardware

3.1 Control units

3.1.1 Terminal strip X2A

PIN	Function	Name	Description
1	+ Set value input 1	AN1+	The input signal 0...±10 V; 0...±20 mA a. 4...20 mA is defined with An.00/ An.10. Specification and control see chap. 7.2.2.
2	- Set value input 1	AN1-	
3	+ Set value input 2	AN2+	Resolution: 12 Bit (11 Bit at F5 servo in the A-housing, Ri = 30 kΩ, scan time: 1 ms / at fast setpoint setting: 250 µs
4	- Set value input 2	AN2-	(see. chapter 7.4.2)
5	Analog output 1	ANOUT1	The variable for outputting at analog output is determined with An.31 / 36. Specification and control see chap.7.2.11
6	Analog output 2	ANOUT2	Voltage range: 0...±10V, Ri = 100 Ω, resolution: 10 Bit, PWM-Frequency: 3,4 kHz, filter response 1. order: 178 Hz
7	+10 V output	CRF	Reference voltage output +10 VDC +5% / max. 4 mA for set value potentiometer
8	Analog mass	COM	Mass for analog in- and outputs
9	Analog mass	COM	Mass for analog in- and outputs
10	Progr. input 1	I1	Specifications, activation and programming of digital inputs see chapter 7.3
11	Progr. input 2	I2	
12	Progr. input 3	I3	All digital inputs are free programmable. The control release
13	Progr. input 4	I4	is firmly linked with the input ST, but can be occupied with additional
14	Progr. input forward	F	other functions.
15	Progr. input reverse	R	Ri = 2,1 kΩ
16	Progr. input control rel.	ST	Scan time: 1 ms
17	Progr. input reset	RST	
18	Transistor output 1	O1	Specifications, control and programming
19	Transistor output 2	O2	see chap. 7.3.12 ...7.3.22,
			a total of max. 50 mADC for both outputs
20	+24 V output	U_{out}	approx. 24V DC output (max.100 mA)
21	20...30 V input	U_{in}	Voltage input for ext. supply, potential 0 V X2A.22/23
22	Digital mass	0 V	Potential for digital in-/outputs
23	Digital mass	0 V	Potential for digital in-/outputs
24	Relay 1 / NO contact	RLA	Programmable relay output 1 (terminal X2A.24...26);
25	Relay 1 / NC contact	RLB	Programmable relay output 2 (terminal X2A.27...29)
26	Relay 1 / switching	RLC	Specifications, control and programming of the relay outputs
27	contact	FLA	see chapter 7.3.12 ... 7.3.22
28	Relay 2 / NO contact	FLB	max. 30 V DC, 0,01...1 A
29	Relay 2 / NC contact	FLC	
	Relay 2 / switching contact		

3.1.2 Connection of the control

In order to prevent a malfunction caused by interference voltage supply on the control inputs, the following directions should be observed:

EMC

Use shielded/drilled cables
Lay shield on one side of the inverter onto earth potential, Lay control and power cable separately (about 10...20 cm apart); Lay crossings in a right angle

3.1.3 Digital inputs

Figure 3.1.3.a Digital inputs in PNP control (di.00 = 0)

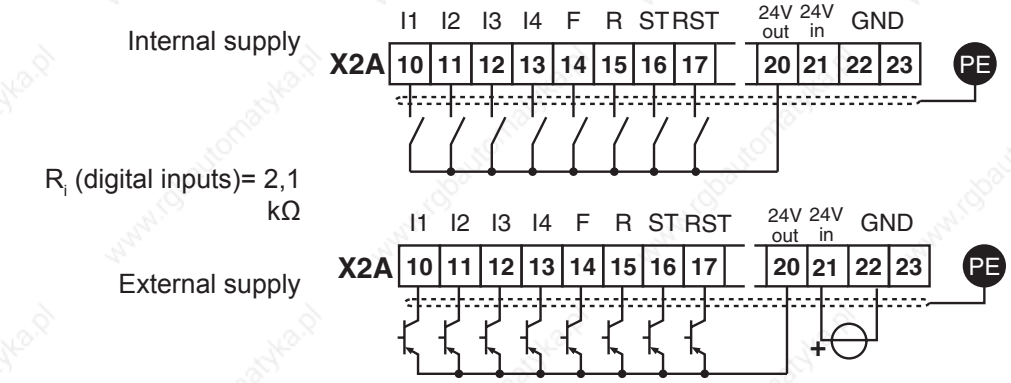

Switching voltage for digital inputs = 13...30V DC ±0% smoothed

Figure 3.1.3.b Digital inputs in NPN control (di.00 = 1)

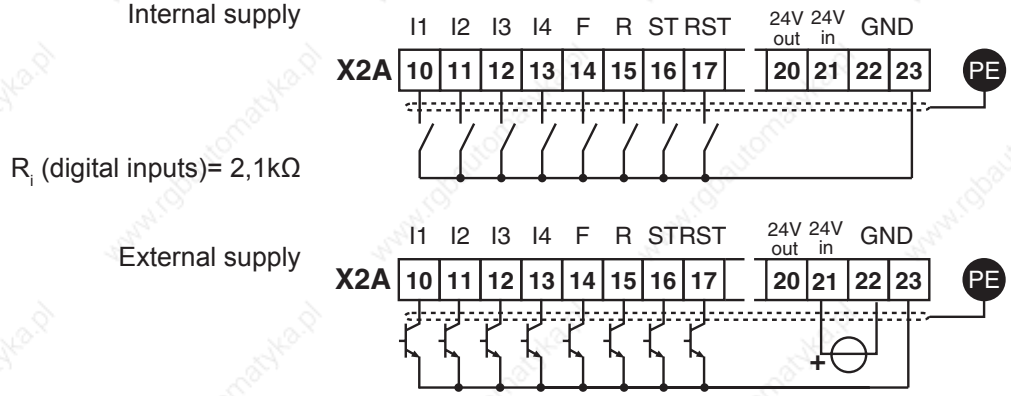

3.1.4 Analog inputs

Connect unused analog inputs with the analog mass, to prevent set value fluctuations!

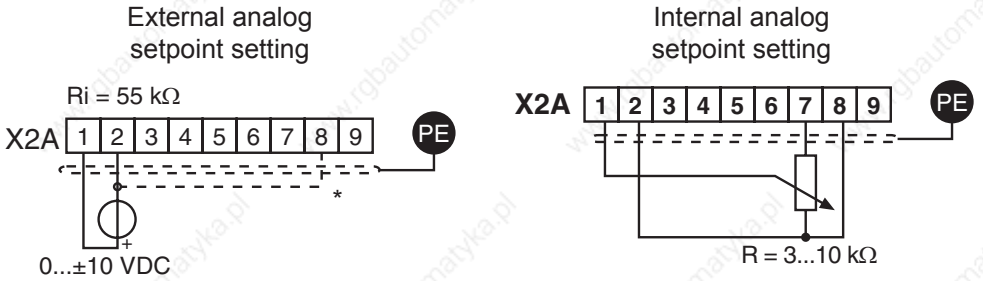

The inputs X2A.3 and X2A.4 can be programmed also as setpoint input and interconnected (see chapter 7.2).

Connect equipotential bonding conductor only, if a potential difference of > 30 V exists between the controls. The internal resistance is reduced to 30 KΩ.

3.1.5 Voltage input / external power supply

The supply of the control circuit through an external voltage source keeps the control in operational condition even if the power stage is switched off. To prevent undefined conditions at external power supply the basic procedure is to first switch on the power supply and after that the inverter.

1. Introduction		
2. Summary		
3. Hardware		
4. Operation	**4.1 Fundamentals**	**4**
5. Selection of Operating Mode		
6. Initial Start-up		
7. Functions	4.2 Password input	
8. Error Assistance		
9. Project Design		
10. Networks		
11. Parameter Overview		
12. Annex		

4.1.1 Parameter, parameter groups, parameter sets ..... 4.1 - 3
4.1.2 Selection of a parameter ..... 4.1 - 4
4.1.3 Adjustment of parameter value ..... 4.1 - 4
4.1.4 ENTER-parameter ..... 4.1 - 5
4.1.5 Non-programmable parameters ..... 4.1 - 5
4.1.6 Resetting of error messages ..... 4.1 - 5
4.1.7 Resetting of peak values ..... 4.1 - 5
4.1.8 Acknowledgement of status signals ..... 4.1 - 5

4. Operation

The following chapter describes the fundamentals of the software structure as well as the operating of the unit.

4.1 Fundamentals

The control boards F5 include following operating modes:

Operating modes of the control board		
Customer mode	**Application mode**	**Drive mode**
- is a list of parameters (CP parameters), freely definable, which are necessary or important for the user - supplied with a parameter list defined by KEB	- all parameter groups (exeption: CP-parameter) and parameter sets can be selected and, if necessary, changed - usually it is activated only for the adaption to the application	- with this special mode, the unit can be put into operation via operator - with the exception of the control release no terminal wiring is needed

4.1.1 Parameter, parameter groups, parameter sets

What are parameter, parameter groups und parameter sets?

Parameters are values changeable by the operator in a program, which have an influence on the program flow. A parameter consists of:

Parameter designation and **Parameter value**

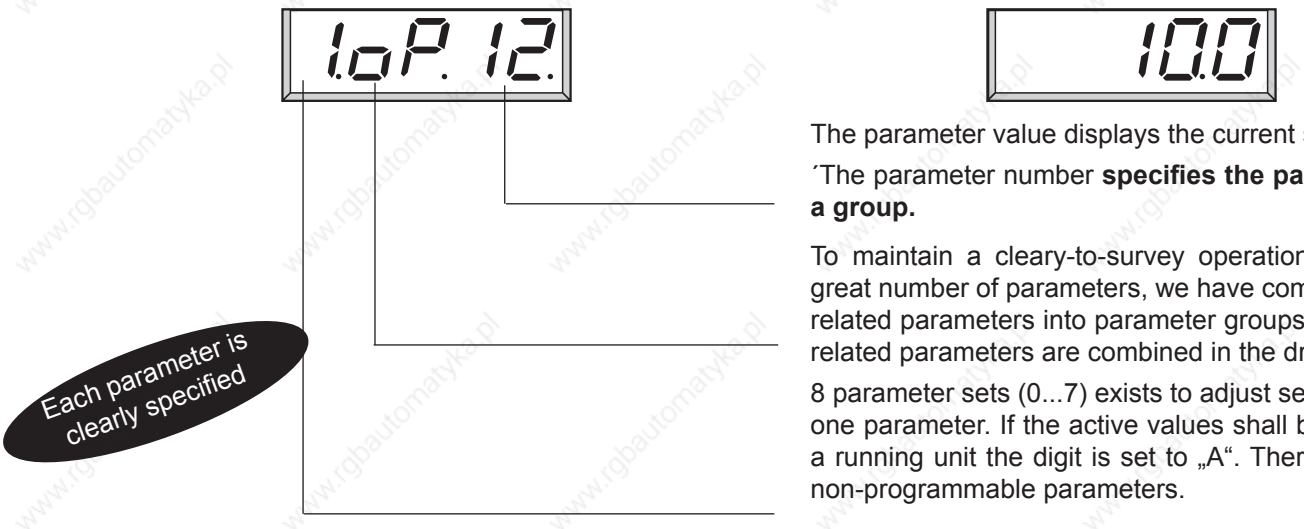

The parameter value displays the current settings

´The parameter number **specifies the parameter within a group.**

To maintain a cleary-to-survey operation inspite of the great number of parameters, we have combined function-related parameters into parameter groups (e.g. all motor-related parameters are combined in the drive(dr)-group).

8 parameter sets (0...7) exists to adjust several values for one parameter. If the active values shall be displayed for a running unit the digit is set to „A“. There is no digit for non-programmable parameters.

Example:

A conveyor belt shall be used with 3 different speeds. A parameter set is programmed for each "speed" ...acceleration, deceleration etc. can be adjusted individually.

4.1.2 Selection of a parameter

The blinking point indicates the changeable area. By pressing the ENTER-key the blinking point is shifted.

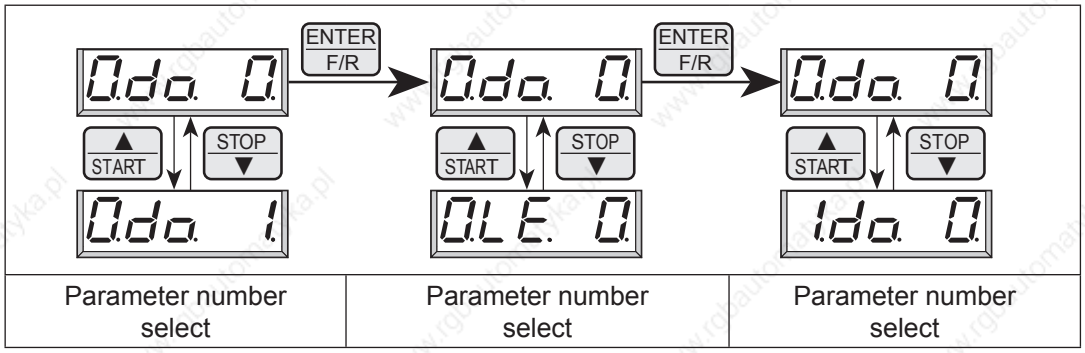

For non-programmable parameters (see 4.1.5)
a parameter set number is not displayed

Change between parameter values	FUNC SPEED	**and parameter designation**.

4.1.3 Adjustment of parameter value

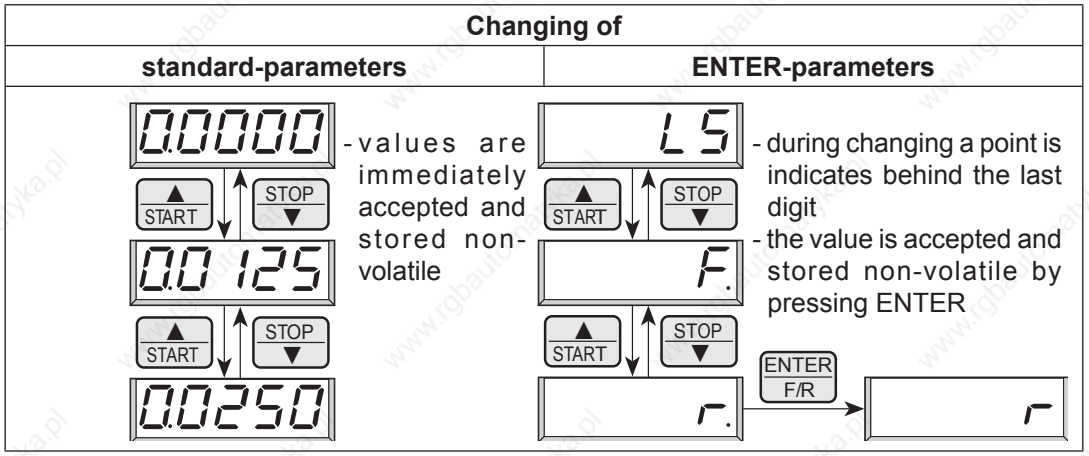

Parameter values can be changed only, when the parameter set is not adjusted to "Active parameter set" (A)! (see 4.1.6)

4.1.4 ENTER-parameter

For some parameters it is not sensible that the selected values become active immediately. For that reason they are called ENTER-parameters, they do not become active until the ENTER-key is pressed.
Example: At digital setting of rotation direction the rotation reverse (r) shall be selected from standstill (LS). As seen above it must be switched at this in forward (F) direction of rotation (F). The drive shall start only if the direction of rotation reverse is selected and confirmed with ENTER.

4.1.5 Non-programmable parameters

Certain parameters are not programmable, as their value must be the same in all sets (e.g. bus address or baud rate). For an easy identification of these parameters the parameter set number is missing in the parameter identification. **For all non-programmable parameters the same value is valid independent of the selected parameter set!**

4.1.6 Resetting of error messages

If a malfunction occurs during operation, the actual display is overwritten by a blinking error message. The error message can be deleted by pressing the ENTER key, so the initial value is displayed again.
ATTENTION! The resetting of the error message with ENTER is no error reset, i.e. the error status in the inverter is not reset. Thus is possible to correct adjustments before the error reset. An error reset is only possible by the reset terminal or control release.

4.1.7 Resetting of peak values

To permit conclusions on the operational performance of the drive, parameters are provided that indicate the peak values. Peak value means that the highest measured value is stored for the ON-time of the inverter (slave pointer principle). The peak value is cancelled by ▲ or ▼ and the actual measured value is shown in the display.

4.1.8 Acknowledgement of status signals

To monitor the correct execution of an action some parameters send a status signal. For example, after copying a set the display shows "PASS" to indicate that the action was carried out without errors. These status signals must be acknowledged with ENTER.

1. Introduction	4.1 Fundamentals
2. Summary	
3. Hardware	
4. Operation	
5. Selection of Operating Mode	
6. Initial Start-up	
7. Functions	
8. Error Assistance	
9. Project Design	4.2 Password structure
10. Networks	
11. Parameter Overview	
12. Annex	

4.2.1 Password levels ..... 4.2 - 3
4.2.2 Passwords ..... 4.2 - 4
4.2.3 Changing of password level ..... 4.2 - 5

4.2 Password structure

The KEB COMBIVERT is provided with extensive password protection. The different passwords are used to

- change the operating mode
- set a write protection
- activate the service mode
- switch to the Drive mode

Depending on the actual operating mode the password can be entered in the following parameters:

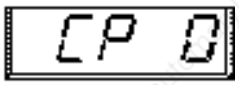	when the CP mode is active
	when the application mode is active

4.2.1 Password levels

The parameter value of the above parameters shows the actual password level. Following indications are possible:

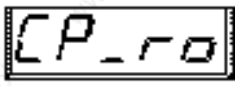	**CP - read only**	Only the customer parameter group is visible, exept for CP. 0 all parameters are in the read-only status (see chapter 4.3).
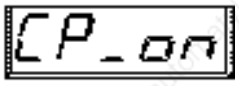	**CP - on**	Only the customer parameter group is visible. All parameters can be changed.
	CP service	Like CP-on, but the parameter identification is indicated according to the original parameter (see chapter 4.3)
	Application	All application parameters are visible and can be changed. The CP-parameters are not visible.
	Drive mode	The Drive-Mode is a special operating mode, here the unit can be put into operation via the operator.

4.2.2 Passwords

By selecting one of the following passwords you can switch to the respective password level:

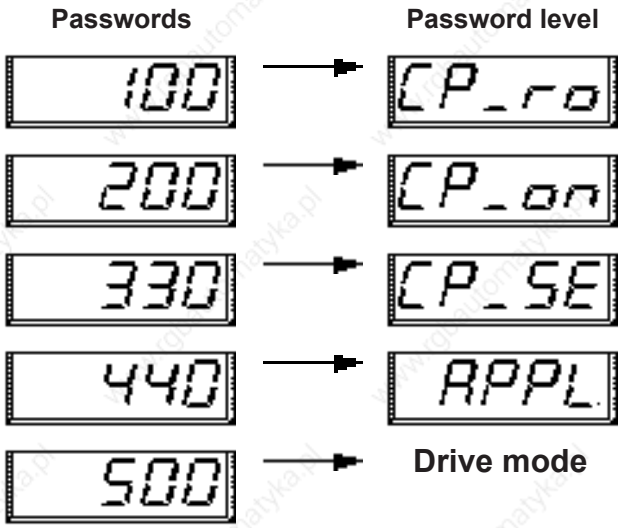

To finish the Drive-Mode press ENTER + FUNCT key for approx. 3 sec.

4.2.3 Changing of password level

Example 1:
Switching from CP mode to the application mode

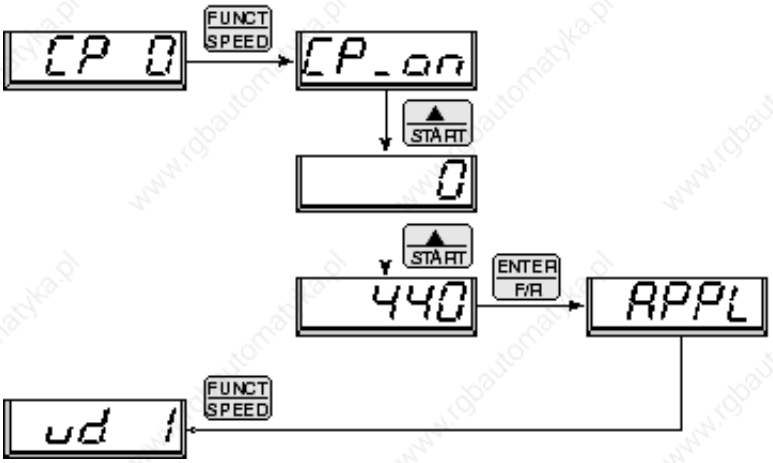

With the exception of the service password all entered password levels are generally stored non volatile!

Example 1:
Switching from application mode to the CP read only mode

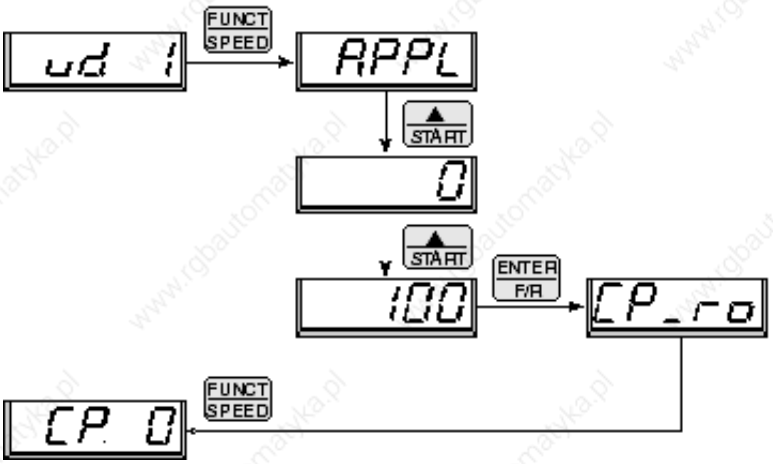

1. Introduction			
2. Summary			
3. Hardware			
4. Operation			
5. Selection of Operating Mode	5.1	Selection of operating mode	5
6. Initial Start-up			
7. Functions			
8. Error Assistance			
9. Project Design			
10. Networks			
11. Parameter Overview			
12. Annex			

5. Selection of Operating Mode

This instruction manual is valid for the following software versions:

Software type	Control type (adjustment ud.02)	Description
F5A V4.00	4: F5-M / 4000rpm 5: F5-M / 8000rpm 6: F5-M / 16000rpm 7: F5-M / 500rpm	**Standard software** for the operation: - of asynchronous motors with vector control - of asynchronous motors with V/F characteristic control - of synchronous motors with vector control
	8: F5-S / 4000rpm 9: F5-S / 8000rpm 10: F5-S / 16000rpm 11: F5-S / 500rpm	
F5A V4.01	4: F5-M / 4000rpm 5: F5-M / 8000rpm 6: F5-M / 16000rpm 7: F5-M / 32000rpm 12: F5-M / 64000rpm 13: F5-M / 128000rpm	**Software for motors with a maximum speed upto 128000 rpm (high-frequency applications)** corresponding to standard software F5A-M V4.00, except: • Control type 7 or 11 is for a maximum speed of 32000 rpm instead of 500 rpm • additional control types 12 / 13 or 14 / 15 for motors with a maximum speed of 64000 rpm or 128000 rpm (Attention: With output frequencies > 800Hz or if the ratio of output frequency to rated frequency is smaller than 1:10, please contact KEB regarding to the application.)
	8: F5-S / 4000rpm 9: F5-S / 8000rpm 10: F5-S / 16000rpm 11: F5-S / 32000rpm 14: F5-S / 64000rpm 15: F5-S / 128000rpm	
F5H V2.00	4: F5-M / 4000rpm 5: F5-M / 8000rpm 6: F5-M / 16000rpm 7: F5-M / 500rpm	**Software for the speed-controlled operation of asynchronous motors without speed feedback.** The measured speed is replaced by an estimated speed actual value, which is formed by means of a mathematical model of the asynchronous motor. - Also operation with speed feedback possible.
F5H V2.01	4: F5-M / 4000rpm 5: F5-M / 8000rpm 6: F5-M / 16000rpm 7: F5-M / 32000rpm 12: F5-M / 64000rpm 13: F5-M / 128000rpm	**Software for the speed controlled operation of asynchronous motors without speed feedback with a maximum speed upto 128000 rpm** - Control type 7 is for a maximum speed of 32000 rpm instead of 500 rpm - additional control types 12 and 13 (Attention: restrictions see high-frequency software F5A V4.01)
F5E V2.10	8: F5-S / 4000rpm 9: F5-S / 8000rpm 10: F5-S / 16000rpm 11: F5-S / 500rpm	**Software for the speed-controlled operation of synchronous motors without speed feedback.** The measured speed is replaced by an estimated speed actual value, which is formed by means of a mathematical model of the synchronous motor. - Also operation with speed feedback possible
F5E V2.11	8: F5-S / 4000rpm 9: F5-S / 8000rpm 10: F5-S / 16000rpm 11: F5-S / 32000rpm 14: F5-S / 64000rpm 15: F5-S / 128000rpm	**Software for the speed controlled operation of synchronous motors without speed feedback with a maximum speed upto 128000 rpm** - Control type 11 is for a maximum speed of 32000 rpm instead of 500 rpm - additional control types 14 and 15 (Attention: restrictions see high-frequency software F5A V4.01)

This operating instruction is not valid for the G mode (V/F characteristics open loop mode, because the display is scaled in Hz, not in rpm). I.e. this instruction is not valid for controller types, which selects the G-mode (F5-G / xxxHz).

Attention:
If a download list is downloaded to an inverter with another controller type, or if the COMBIVIS Config-File is used for another controller type parameters (e.g. set speed, speed limits, etc..) are not correctly displayed. COMBIVIS recognizes the use of not suitable lists and selects autmatically the right Config file. Unintended settings and wrong displays can occur if the warning messages are ignored.

The standardisation of some parameters is depending on the speed range of the control type.

Stan-dard	Speed range	Resolution	Parameter
1	500...32000 64000 128000	1 rpm 2 rpm 4 rpm	SY.52, SY.53
2	500 4000...128000	1 Nm 0,1 Nm	dr.27, dr.33, dr.40, dr.42, dr.44, dr.46
3	500 4000...64000 128000	0,125 rpm 1 rpm 2 rpm	dr.01, dr.17, dr.18, dr.24, dr.39, dr.41, dr.43, dr.45, dr.47 CS.11, CS.12 Ec.25 nn.02, nn.03 dS.19
4	500 4000 8000 16000 32000 64000 128000	0,015625 rpm 0,125 rpm 0,5 rpm 1 rpm 2 rpm 4 rpm 8 rpm	SY.45 ru.01, ru.02, ru.06, ru.07, ru.09, ru.10, ru.63, ru.79, ru.85, ru.86, ru.89 oP.03, oP.06, oP.07, oP.10, oP.11, oP.14, oP.15, oP.21, oP.22, oP.23, oP.40, oP.41, oP.64, oP.65, oP.66, oP.67, oP.68 Pn.32, Pn.37, Pn.41, Pn.48 dS.21 LE.16 cs.04 PS.08, PS.09, PS.21, PS.22, PS.25 nn.08
5	500 4000 8000 16000 32000 64000 128000	0,0015625 Hz 0,0125 Hz 0,05 Hz 0,1 Hz 0,2 Hz 0,4 Hz 0,8 Hz	ru.03 uF.00, uF.02

Some parameters (ramp adjustments) have reference values, which are depending on the selected speed range (500, 4000, 8000, 16000, 32000, 64000, 128000 rpm.

Speed range	Reference value	Parameter
500	125 rpm	Pn.21, Pn.60 OP.28 .. 31, OP.46 – 48 dr.49 dS.22
4000	1000 rpm	
8000	2000 rpm	
16000	4000 rpm	
32000	8000 rpm	
64000	16000 rpm	
128000	32000 rpm	

Attention:

Unless otherwise noted, the description of individual parameter adjustments presets the speed range of 4000 rpm (ud.02 = 4 or 8).

Chapters 7.5 to 7.10 are not valid for all operating modes.

Which chapters are valid is dependent on the software type, control type and the selection in cS.00 and cS.

1. Introduction	
2. Summary	
3. Hardware	6.1 Preparatory measures
4. Operation	
5. Selection of Operating Mode	
6. Initial Start-up	6
7. Functions	
8. Error Assistance	
9. Project Design	
10. Networks	6.2 Start-up
11. Parameter Overview	
12. Annex	

6.1.1 After unpacking the goods ..... 6.1 - 3
6.1.2 Installation and connection ..... 6.1 - 3
6.1.3 Checklist prior to start-up ..... 6.1 - 4

6. Start-up

The following chapter is intended for everybody who has no experience with the KEB frequency inverters. It shall allow a correct entering into this field. But because of the complex application possibilities we must restrict ourselves to explaining the start-up of standard applications.

6.1 Preparatory measures

6.1.1 After unpacking the goods

After unpacking the goods and checking them for complete delivery following measures are to be carried out:

☑ Visual control for transport damage
Should any external damages to the KEB COMBIVERT be visible get in tough with your forwarding agent and return the unit with a corresponding report to KEB.

☑ Check the voltage class:
Absolute check before assembly whether the supply voltage of the KEB COMBIVERT matches the application.

6.1.2 Installation and connection

The EMC-conform installation of the inverter is described in the Instruction Manual Part 1. Installation and connection instructions are found in the instruction manual part 2.

☑ The mounting surface of the inverter must be bright.
☑ If necessary, use contact lacquer as protection against corrosion.
☑ Connect the earthing strip to central point in the control cabinet

Picture 6.1.3 Installation and connection

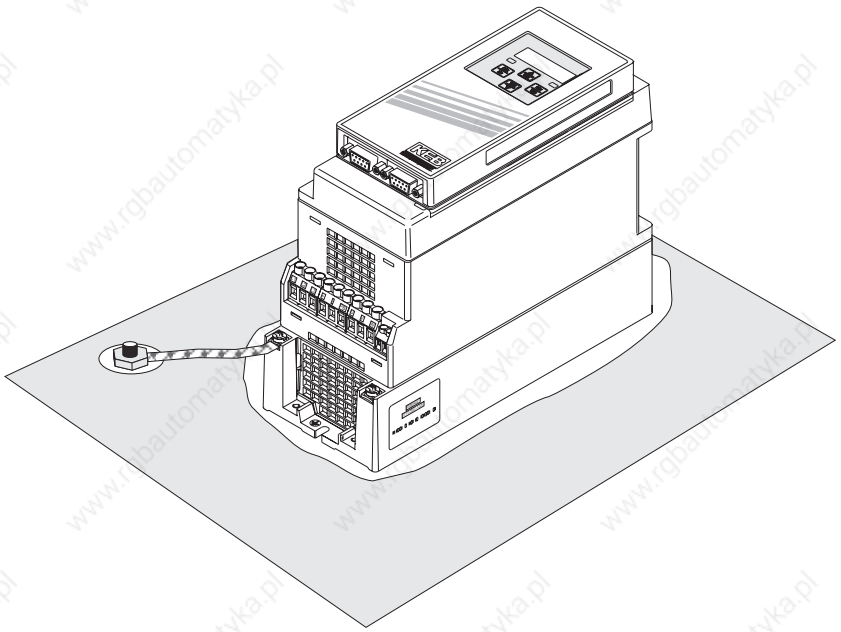

6.1.3 Checklist prior to start-up

Before switching on the inverter go through the following checklist.

- ☑ Is the inverter firmly bolted in the control cabinet?
- ☑ Is there enough space to ensure sufficient air circulation?
- ☑ Are mains and motor cables as well as the control cables installed separately from each other?
- ☑ Are the inverters connected to the correct supply voltage?
- ☑ Are all mass and earthing cables attached and well contacted?
- ☑ Ensure that mains and motor cables are not interchanged as that will lead to the destruction of the inverter!
- ☑ Is the motor connected in phase?
- ☑ Check tacho, initiator and encoder for firm attachment and correct connection!
- ☑ Check, whether all power and control cables are firmly in place!
- ☑ Remove any tools from the control cabinet!
- ☑ Attach all covers and protective caps to ensure that all live parts are secured against direct contact.
- ☑ When using measuring instruments or computers an isolating transformer should be used, if not, make sure that the equipotential bonding between the supply lines is guaranteed!
- ☑ Open the control release of the inverter to avoid the unintended starting of the machine.

1. Introduction	6.1 Preparatory measures
2. Summary	
3. Hardware	
4. Operation	
5. Selection of Operating Mode	
6. Initial Start-up	6
7. Functions	
8. Error Assistance	
9. Project Design	6.2 Start-up
10. Networks	
11. Parameter Overview	
12. Annex	

6.2.1 Start-up of an asynchronous motor ..... 6.2 - 3
6.2.1.1 V/F characteristic operation ..... 6.2 - 4
6.2.1.2 Vector controlled operation with encoder feedback without motor model ..... 6.2 - 6
6.2.1.3 Vector controlled operation with encoder feedback with motor model ..... 6.2 - 9
6.2.1.4 Start-up F5H-M (ASCL/ vector controlled without encoder feedback with motor model) ..... 6.2 - 12
6.2.2 Start-up of a synchronous motor ..... 6.2 - 16
6.2.2.1 Start-up F5A-S ..... 6.2 - 16
6.2.2.2 Start-up F5E-S (SCL) ..... 6.2 - 18

6.2 Initial start-up

After all preparatory measures have been carried out and checked the KEB COMBIVERT F5 can be switched on.

The control release ST (X2A.16) must be deactivated when switching on the first time, since the frequency inverter is not custom-specific parameterized.

The following descriptions suppose that the frequency inverter is on the password level "application mode" (ud.01 = application mode). The selection of the password level is described in the manual chapter 4. The start-up should be executed with COMBIVIS in order to have a short start-up time.
Operating lists are available on the KEB homepage (www.keb.de). This lists contain the necessary parameters for start-up.

Attention: The start-up instruction manual can only give a short overview of the parameter adjustments which are mandatory necessary to start-up the motor.
Thus it represents a check list and not a complete parameter description.
The appropriate chapters of the application manual must be read carefully for exact information about the parameters, additionally points to consider and application-specific adjustments!

The wiring of the motor must be checked before start-up:

- in-phase connection (inverter terminals U, V, W must be connected at the motor terminal board with the appropriate contacts)
  If the wiring is correct the following direction of rotation occurs at setting "clockwise rotation":

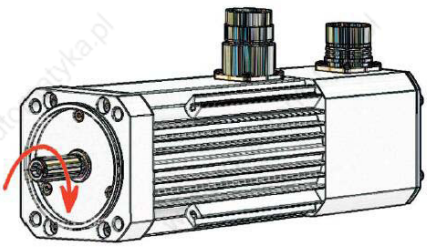

- large surface of shield connection, well grounding (see „EMC conform wiring“ in the manual „… before start-up“)

6.2.1 Start-up of an asynchronous motor

The following chapters describe the start-up of an asynchronous motor in the 4 available modes:

- V/F characteristics open loop operation (F5A-M)
- speed-controlled operation with encoder feedback without motor model (F5A-M)
- speed-controlled operation with encoder feedback with motor model (F5A-M) (recommended operating mode when using a speed feedback)
- speed-controlled operation without encoder feedback (ASCL / F5H-M)

6.2.1.1V/F characteristic operation

1. Open control release

Deactivate terminal X2A.16
→ Inverter state ru.00 = „noP“/„0: no control release“

2. Selection of the speed range

The required speed range (e.g.: 0..+/- 4000 rpm) is selected in control type ud.02.

→ ud.02 control type = 4…7

All data for the adjustment of the controller type (e.g. resolution of the speed, etc.) see chapter 5.1

Attention: Changing the controller type releases loading of the default parameters!
The speed range should be selected at least 10% higher than the highest setpoint speed in the application.

3. Loading the default parameters

Loading the default parameters (KEB factory setting) by

→ Fr.01 copy parameter set = - 4

Attention: Pre-adjustments (e.g. function of the digital inputs) disappear

4. Selection of the controller configuration

Adjust V/F characteristic operation

→ CS.00 speed control config. = 0: off
(default V/F characteristic operation)

Motor data are not necessary for standard V/F characteristic operation.
The following parameters must be examined if SMM (sensorless motor management for speed stabilization during load) should not be used:
Frequency when the highest voltage is output:

→ uF.00 rated frequency

Voltage [in%], which is output at 0Hz:

→ uF.01 boost

If these adjustments for the motor are made correctly continue to proceed at point 9.

5. Input of the motor data

Values dr.00 to dr.05 must be taken from the motor name plate.
The value for dr.06 can be identified automatically (see point 6).

→ dr.00 DASM rated current
→ dr.01 DASM rated speed
→ dr.02 DASM rated voltage
→ dr.04 DASM rated cos (phi)
→ dr.05 DASM rated frequency
→ dr.06 DASM stator resistance

6. Calibration of the stator resistance

The stator resistance dr.06 can be determined automatically by the KEB COMBIVERT.
Inverter must be in status „70: standstill (modulation off)“. Start measurement with the input of
→ dr.06 = 250000: on

Open control release (X2A.16) after the measurement is finished

7. Calculation of motor-dependent data

Activation of SMM, as well as the adaption of the U/f characteristic is made by the input of:

→ Fr10 load mot. dependent parameter = 3

8. Adjust speed controller

The speed controller must be adapted to the application via cS.06 and cS.09.

9. Enter application specific data

e.g. limit values (speed limits, torque limits etc.)
acceleration- / deceleration ramps,
function of the digital in- / outputs,
Type of speed setpoint setting etc.

Proper data for the adaption of the inverter to the respective application can be find in the corresponding chapters

10. Test run

Test run, in order to check whether the drive runs stable in all speed ranges and under all load conditions and if a sufficient safety distance to the power limits is available etc.

6.2.1.2Vector controlled operation with encoder feedback without motor model

With this start-up description it is provided that an incremental encoder to encoder interface 1 (Sub-D15 socket X3A) is used for speed feedback.
Read chapter 7.11 "Speed measurement" for necessary adjustments of your speed encoder when using another encoder type.

Also it must be secured that the motor phases and the incremental encoder are correct wired (in phase, large surface of shield connection, well earth connection). The motor temperature sensor must be connected.
A controlled start-up (V/F characteristic) of the drive can be executed for examination in case of insecurity about the phase allocation (motor and incremental encoder).

1. Open control release

Deactivate terminal X2A.16

→ inverter state ru.00 = „noP“/„0: no control release“

2. Selection of the speed range

The required speed range (e.g.: 0..+/- 4000 rpm) is selected in control type ud.02.

→ ud.02 control type = 4…7

The speed range should be selected at least 10% higher than the highest setpoint speed in the application.

Attention: Changing the controller type releases loading of the default parameters!
All data for the adjustment of the controller type (e.g. resolution of the speed, etc.) see chapter 5.1

3. Loading the default parameters

Loading the default parameters (KEB factory setting) by

→ Fr.01 copy parameter set = - 4

Attention: Pre-adjustments (e.g. function of the digital inputs) disappear

4. Selection of the controller configuration

Adjust speed-controlled operation

→ CS.00 speed control config. = 4
(control mode = speed control)

5. Select source of the speed feedback

The motor speed feedback must be connected to Sub-D socket X3A.

→ cS.01 act. source = 0:channel 1

6. Enter increments per revolution of the speed feedback

Enter the number of increments per revolution according to the name plate of the encoder

→ Ec.01 encoder 1 (inc/r)

Note: Further adjustments are necessary when using another encoder type. Read chapter 7.11 speed measurement

7. Input of the motor data

Values dr.00 to dr.05 must be taken from the motor name plate.

→ dr.00
→ dr.01
→ dr.02
→ dr.03
→ dr.04
→ dr.05

Note:
The equivalent circuit data dr.06...dr.10 are without meaning

8. Activate maximum voltage controller

The maximum voltage controller must be activated for the field-weakening range if the motor reaches the voltage limitation (modulation grade ru.42 = 100%).

→ dS.04 = 24

Parameterization of the controller,
Activation of the active current limitation in the field-weakening range

Attention: Further adjustments must be done in connection with the maximum voltage controller.

9. Calculation of motor-dependent data

Adaption of the adjustments to the motor

→ Fr.10 load mot. dependent parameter = 2: actual DC link voltage

Note:
Since the equivalent circuit data are unknown at this control type, the current controllers cannot be optimally adapted to the motor, as per control with motor model.

10. Enter application specific data

Application specifc data are e.g.

•Limit values (speed limits, etc.)
→ oP parameter (chapter 7.4.5 setpoint limits)

•Acceleration- / deceleration ramps
→ oP parameter (chapter 7.4.7 ramp generator)

•Function of the digital in- / outputs
→ di parameter (chapter 7.3 digital in- and outputs)

•Type of speed setpoint setting
→ oP parameter (chapter 7.4.2, 7.4.3, 7.4.6)

Proper data for the adaption of the inverter to the respective application can be find in the corresponding chapters.

11. Adjust speed controller

The speed controller parameters must be adapted to the application
The maximum voltage controller must be parameterized if the field weakening range is used.

12. Test run

Activate control release (terminal X2A.16) and make a test run, whether the drive runs stable in all speed ranges and under all load conditions.

If error messages occur during the start-up phase, read chapter 8.1 "Error causes and displays"

6.2.1.3 Vector controlled operation with encoder feedback with motor model

Attention: With this start-up description it is provided that an incremental encoder to encoder interface 1 (Sub-D15 socket X3A) is used for speed feedback.
Also it must be secured that the motor phases and the incremental encoder are correct wired (in phase, large surface of shield connection, well grounding).
The motor temperature sensor must be connected.
A controlled start-up (V/F characteristic) of the drive can be executed for examination in case of insecurity about the phase allocation (motor and incremental encoder).

1. Open control release

Deactivate terminal X2A.16
→ Inverter state ru.00 = „noP“/„0: no control release“

2. Selection of the speed range

The required speed range (e.g.: 0...+/- 4000 rpm) is selected in control type ud.02.

→ ud.02 control type = 4…7

The speed range should be selected at least 10% higher than the highest setpoint speed in the application.

Attention: Changing the controller type releases loading of the default parameters!
All data for the adjustment of the controller type (e.g. resolution of the speed, etc.) see chapter 5.1

3. Loading the default parameters

Loading the default parameters (KEB factory setting) by

→ Fr.01 copy parameter set = - 4

Attention: Preadjustments (e.g. function of the digital inputs) disappear.

4. Selection of the controller configuration

Adjust speed-controlled operation

→ cS.00 speed control config. = 4
(control mode = speed control)

5. Select source of the speed feedback

The motor speed feedback must be connected to Sub-D socket X3A.

→ cS.01 actual source = 0: channel 1

6. Enter increments per revolution of the speed feedback

Enter the number of increments per revolution according to the name plate of the encoder

→ Ec.01 encoder 1 (inc/r)

Note: Further adjustments are necessary when using another encoder type. Read chapter 7.11 speed measurement

7. Input of the motor data

Values dr.00 to dr.05 must be taken from the motor name plate.
The values for dr.06 upto dr.08 can be taken from the motor data sheet (if available) or they can be identified automatically (see point 10).
The DASM head-inductance (dr.10) should always be identified, because it is dependent on the selected magnetizing current.

→ dr.00 DASM rated current
→ dr.01 DASM rated speed
→ dr.02 DASM rated voltage
→ dr.03 DASM rated power
→ dr.04 DASM rated cos (phi)
→ dr.05 DASM rated frequency
→ dr.06 DASM stator resistance
→ dr.07 DASM sigma-inductance
→ dr.08 DASM rotor resistance
→ dr.10 DASM head-inductance

Attention: The interconnection of the motor must be considered at acceptance of the values of the motor data sheet. The data sheet contains mostly phase values. The phase-phase values must be entered in parameters dr.06... dr.10.

The default values can remain in dr.06 to dr.10 up to the identification if no equivalent circuit data are known.

8. Parameterize flux/rotor adaptation mode

The operation with motor model is activated in parameter ds.04 flux/rotor adaptation mode.

→ dS.04 = 249

Further necessary adjustments for the operation with motor model are additionally made by this parameter:

- Maximum voltage controller, maximum voltage 100% (without overmodulation)
- Flux controller and magnetization build-up active before start-up

Attention: Further adjustments must be done in connection with the maximum voltage controller.
Parameterization of the controller 7.9.1
Activation of the active current limitation in the field-weakening range 7.9.2

Further information about the flux controller and flux build-up see chapter 7.6.2.3.3.1

9. Calculation of motor-dependent data

The motor-dependent data (e.g. dr.18 field weak. speed) must be calculated here, even if the motor data dr.06 to dr.10 are unknown.

→ Fr.10 load mot. dependent para. = 2:act. DC link voltage

10. Identification of the equivalent circuit data

The equivalent circuit data dr.06..dr.10 can be automatically determined by the KEB COMBIVERT.
The following must be considered:

- The motor must be in no-load operation for identification of the main inductance. As standard the motor rotates with dr.17: "speed for max torque“. The speed limits (oP-parameter/chapter 7.4.5) must be programmed accordingly if this is not permissible.
- The direction of rotation is clockwise, the acceleration time is preset by dr.49: „Lh.ident. acc/dec time“
- The speed controller must be parameterized for acceleration (dynamics not necessary => select small value for cS.09: KI speed)
- The brake control mode must be activated (corresponding to KEB factory setting)

After successful measurement ru.00 = 127 "drive data calculated/Cddr" is displayed.
The identification is started with:

→ dr.48 = 8: complete AutoIdentification !with rotation!

Close control release (X2A.16) for starting the identification and open it after the measurement.

Attention:
Depending on the used motor the identification takes some minutes. Noises in the motor can occur caused by high frequency test signals. The sequence of the identification can be tracked in parameter dr.62 "state motor ident.".
Since the drive is not optimally parameterized, a flat acceleration ramp (dr.49) should be selected for the identification to avoid overload of the motor.
Note:
If the measurement is interrupted with an error, ru.00 = 60 (error! drive data / E.Cdd) is displayed.
Read chapter 7.6 for further data of the identification.

11. Adjustment of specific data

→ dS.02 Current decoupling = 1:on
→ uF.15 Hardw. curr. lim. mode = 0: off
→ uF.18 Deadtime comp. mode = 3: automatically

12. Enter application specific data

Application specifc data are e.g.

- Limit values (speec limits, torque limits etc.)

→ oP parameter (chapter 7.4.5 setpoint limits)
→ CS parameter (chapter 7.8 torque display and limitation)

- Acceleration / deceleration ramps

→ oP parameter (chapter 7.4.7 ramp generator)

- Function of the digital in- / outputs

→ di parameter (chapter 7.3 digital in- and outputs)

- Type of speed setpoint setting

→ oP parameter (chapter 7.4.2, 7.4.3, 7.4.6) etc.

Proper data for the adaption of the inverter to the respective application can be find in the corresponding chapters.

13. Adjust speed controller

The speed controller parameters can be calculated by the inverter for applications with constant inertia and rigidly coupled load (see chapter 7.7.1).
The speed controller must be manually adapted, if this adjustment is not workable for the application or if the result is nonsatisfying.
The maximum voltage controller must be parameterized, if the field weakening range is used.
Note:
Current and flux controller are automatically adjusted during identification.

14. Test run

Check whether the drive operates stable in all speed ranges and under all load conditions.

If error messages occur during the start-up phase, read chapter 8.1 "Error causes and displays"

6.2.1.4 Start-up F5H-M (ASCL/ vector controlled without encoder feedback with motor model)

Attention: The motor temperature sensor must be connected.

1. Open control release

Deactivate terminal X2A.16

→ Inverter state ru.00 = „noP“/„0: no control release“

2. Selection of the speed range

The required speed range (e.g.: 0..+/- 4000 rpm) is selected in control type ud.02.

→ ud.02 control type = 4…7

The speed range should be selected at least 10% higher than the highest setpoint speed in the application.

Attention: Changing the controller type releases loading of the default parameters!
All data for the adjustment of the controller type (e.g. resolution of the speed, etc.) see chapter 5.1

3. Loading the default parameters

If the control type ud.02 was not changed, loading of the default parameters (KEB factory setting) can be released by

→ Fr.01 copy parameter set = - 4

Attention: Preadjustments (e.g. function of the digital inputs) disappear

4. Selection of the controller configuration

Adjust speed-controlled operation

→ CS.00 speed control config. = 4

(control mode = speed control)

5. Select source of the speed feedback

Motor speed feedback not available.

→ cS.01 actual source = 2: calculated actual value

6. Input of the motor data

Values dr.00 to dr.05 must be taken from the motor name plate.
The values for dr.06 upto dr.08 can be taken from the motor data sheet (if available) or they can be identified automatically (see point 10).
The DASM head-inductance (dr.10) should always be identified, because it is dependent on the selected magnetizing current.

→ dr.00 DASM rated current
→ dr.01 DASM rated speed
→ dr.02 DASM rated voltage
→ dr.03 DASM rated power
→ dr.04 DASM rated cos (phi)
→ dr.05 DASM rated frequency
→ dr.06 DASM stator resistance
→ dr.07 DASM sigma-inductance
→ dr.08 DASM rotor resistance
→ dr.10 DASM head-inductance

Attention: The interconnection of the motor must be considered at acceptance of the values of the motor data sheet. The data sheet contains mostly phase values. The phase-phase values must be entered in parameters dr.06...dr.10.
The default values can remain in dr.06 to dr.10 up to the identification if no equivalent circuit data are known.

7. Parameterize flux/rotor adaptation mode

The operation with motor model is activated in parameter ds.04 flux/rotor adaptation mode.

→ dS.04 = 249

Further necessary adjustments for the operation with motor model are additionally made by this parameter:
- Maximum voltage controller, maximum voltage 100% (without overmodulation)
- Flux controller and magnetization build-up active before start-up

Attention: Further adjustments must be done in connection with the maximum voltage controller. Parameterization of the controller,
Activation of the active current limitation in the field-weakening range 7.9.2.
Further information about the flux controller and flux build-up see chapter 7.6.2.3.3.1

8. Calculation of motor-dependent data

The motor-dependent data (e.g. dr.18 field weak. speed) must be calculated here, even if the motor data dr.06 to dr.10 are unknown.

→ Fr.10 load mot. dependent para. = 2:act. DC link voltage

9. Identification of the equivalent circuit data

The equivalent circuit data dr.06..dr.10 can be automatically determined by the KEB COMBIVERT.
The following must be considered:

• The motor must be in no-load operation for identification of the main inductance. As standard the motor rotates with dr.17: "speed for max torque“.The speed limits (oP-parameter/chapter 7.4.5) must be programmed accordingly if this is not permissible.

• The direction of rotation is clockwise, the acceleration time is preset by dr.49: „Lh.ident. acc/dec time“

• The speeed controller must be parameterized for acceleration (dynamics not necessary => select small value for cS.09: KI speed)

• The brake control mode must be activated (corresponding to KEB factory setting)

After successful measurement ru.00 = 127 "drive data calculated/Cddr" is displayed.
The identification is started with

→ dr.48 = 8:complete AutoIdentification !with rotation!

Close control release (X2A.16) for starting the identification and open it after the measurement.

Attention:
Depending on the used motor the identification takes some minutes. Noises in the motor can occur caused by high frequency test signals. The sequence of the identification can be tracked in parameter dr.62 "state motor ident.".
Since the drive is not optimally parameterized, a flat acceleration ramp (dr.49) should be selected for the identification to avoid overload of the motor.
Note:
If the measurement is interrupted with an error, ru.00 = 60 (error! drive data / E.Cdd) is displayed.
Read chapter 7.6 for further data of the identification

10. Adjustment of specific data

→ dS.02 Current decoupling = 1: on
→ uF.15 Hardw. curr. lim. mode = 0: off
→ uF.18 Deadtime comp. mode = 3: automatically

11. Enter application specific data

Application specifc data are e.g.

- Limit values (speec limits, torque limits etc.)

  → oP parameter (chapter 7.4.5 setpoint limits)
  → cS parameter (chapter 7.8 torque display and limitation)

- Acceleration- / deceleration ramps

  → oP parameter (chapter 7.4.7 ramp generator)

- Function of the digital in- / outputs

  → di parameter (chapter 7.3 digital in- and outputs)

- Type of speed setpoint setting

  → oP parameter (chapter 7.4.2, 7.4.3, 7.4.6) etc.

Proper data for the adaption of the inverter to the respective application can be find in the corresponding chapters

12. Adjust speed controller

The speed controller parameters can be calculated by the inverter for applications with constant inertia and rigidly coupled load (see chapter 7.11)
The speed controller must be manually adapted if this adjustment is not workable for the application or if the result is nonsatisfying.
The maximum voltage controller must be parameterized if the field weakening range is used.

Note:
Current and flux controller are automatically adjusted during identification.

13. Test run

Check whether the drive operates stable in all speed ranges and under all load conditions.
In some cases operation with ASCL at low speed is critical. If the behaviour of the drive (e.g. when reversing or stopping) is not optimal, additional measures must be executed (described in chapter 7.6.2.3.5.1 "operation at low speed").

If error messages occur during the start-up phase, read chapter 8.1 "Error causes and displays"

6.2.2 Start-up of a synchronous motor

The following chapter describes the initial start-up of a synchronous motor splitted in speed controlled systems with encoder feedback (F5A-S) and speed controlled systems without encoder feedback (F5E-S).

6.2.2.1 Start-up F5A-S

Steps 1 to 10 can be skiped when using a KEB servo system consisting of KEB COMBIVERT F5 and KEB servo motor.

In this case the unit is already preset by a specific motor down load.

The following steps describe a standard start-up when using a "customer-specific motor“. Encoder interface 1 is used as encoder feedback.

1. Open control release

Deactivate terminal X2A.16
→ Inverter state ru.00 = noP/ „no control release“

2. Selection of the speed range

The useable speed range is adjusted with ud.02:

→ ud.02 control type = 8…11

All data for the adjustment of the controller type (e.g. resolution of the speed, etc.) see chapter 5.1

3. Loading the default parameters

Loading the default parameters (KEB factory setting) by

→ Fr.01 copy parameter set = - 4

Attention:
Preadjustments (e.g. function of the digital inputs) disappear

4. Select source of the speed feedback

→ cS.01 actual source = 0: channel 1

5. Enter increments per revolution of the speed feedback

→ Ec.01 encoder 1 (inc/r)

Note:
Not valid for resolver

6. Input of the motor rating plate data

→ dr.23 DSM rated current
→ dr.24 DSM rated speed
→ dr.25 DSM rated frequency
→ dr.27 DSM rated torque
→ dr.28 DSM current for zero speed

Note: The approximation value of dr.23 (rated current) can be used if dr.28 is not indicated.
Stator resistance and inductance must be preset as phase-phase values (RUV. LUV) and the EMK must be preset as peak value of the phase-phase voltage (√2 x U_{UV}).
The values can be taken from a data sheet OR they can be automatically identified. Identification: see step 10.

7. Input of equivalent circuit data

- dr.30 DSM winding resistance
- dr.31 DSM winding inductance
- dr.26 DSM EMK [Vpk*1000rpm]

8. Calculation of motor-dependent data

→ Fr.10 load mot. dependent parameter = 2: actual DC link voltage

9. Adjust system position

-Checking the direction of rotation. ru.09 must display a positive speed at manual forward direction of rotation.
-Motor shaft must be mandatory free-wheeling (no-load operation).
→ Ec.02 absolute pos. enc. 1 = 2206
-Close control release (X2A.16)
→ After successful trimming ru00 = 127: cddr/ „drive data calculated“ is displayed.
-Open control release again (X2A.16)

See chapter 7.6 for all data of the system position trimming.

10. If necessary identification of the equivalent circuit data

→ dr.48 motor identification = 7: autoIdentification without EMK
-Close control release (X2A.16)
→ After successful identification ru00 = 127: cddr/ „drive data calculated“ is displayed.
-Open control release again (X2A.16)

Note:
The EMK is not measured by identification, but it is calculated from the rated data.
Read chapter 7.6 for further data of the identification

11. Adjustment of specific data

→ dS.02 current decoupling = 1:on
→ uF.15 hardw. curr. lim. mode = 0:off
overload characteristic of the motor:
→ dr.33 DSM max. torque (otherwise 5* dr.27 rated torque)

12. Optimize speed controller

See chapter 7.11 for all data of the adjustment.

The start-up is successful completed if no error messages have arisen.
A detailed parameter description and their effects are described in chapter 7.6.

6.2.2.2Start-up F5E-S (SCL)

The following steps describe a standard start-up when using a KEB motor or "customer-specific motor“. An encoder feedback is not used.

1. Open control release

Deactivate terminal X2A.16
→ Inverter state ru.00 = noP/ „no control release“

2. Selection of the speed range

The useable speed range is adjusted with ud.02:
→ ud.02 control type = 8…11

See chapter 5.1 for all data of the adjustment

3. Loading the default parameters

→ Fr.01 copy parameter set = - 4

4. Select source of the speed feedback

→ cS.01 actual source = 2 : calculated actual value

5. Input of the motor rating plate data

→ dr.23 DSM rated current
→ dr.24 DSM rated speed
→ dr.25 DSM rated frequency
→ dr.26 DSM EMK [Vpk*1000rpm] [Vpk x 1000rpm] *
→ dr.27 DSM rated torque
→ dr.28 DSM current for zero speed
→ dr.30 DSM winding resistance *
→ dr.31 DSM winding inductance *

* Note:
dr.30 and dr.31 must be entered as phase-phase value (RUV, LUV).
Equivalent circuit data must be entered according to the data sheet OR the data must be identified automatically like step 7.
dr.26 must be programmed as peak value of the phase-phase voltage UUV.

6. Calculation of motor-dependent data

→ Fr.10 load mot. dependent parameter = 2: actual DC link voltage

7. Identification of the equivalent circuit data

Attention: Requires motor revolution in no-load operation!
→ dr.48 motor identification = 8: complete AutoIdentification
Close control release (X2A.16)
→ After successful identification ru.00 = 127: cddr/ „drive data calculated“ is displayed.
Open control release again (X2A.16)
Further informations see chapter 7.6.

Depending on the used motor the identification takes some minutes. Noises in the motor can occur caused by high frequency test signals.

8. Adjustment of specific data

→ dS.02 current decoupling = 1: on
→ uF.15 hardw. curr. lim. mode = 0: off
→ uF.18 deadtime comp. mode = 3: automatically
Overload characteristic of the motor:
→ dr.33 DSM max. torque (otherwise 5 x dr.27 rated torque)

9. Optimize speed controller

See chapter 7.11 for all data of the adjustment

The start-up is successful completed if no error messages have arisen.
A detailed parameter description and their effects are described in chapter 7.6.

Special adjustments must be made for the operation with special motors or Hf motors. Please contact KEB for this case.

1. Introduction	7.1 Operating and appliance data
2. Summary	7.2 Analog in- and outputs I
3. Hardware	7.3 Digital in- and outputs
4. Operation	7.4 Setpoint-, rotation- and ramp adjustment
5. Selection of Operating Mode	7.5 Motor data and controller adjustments of the asynchronous motor
6. Initial Start-up	7.6 Motor data and controller adjustments of the synchronous motor
7. Functions	7.7 Speed control
8. Error Assistance	7.8 Torque display and -limiting
9. Project Design	7.9 Torque control
10. Networks	7.10 Current control, -limiting and switching frequencies
11. Parameter Overview	7.11 Speed measurement
12. Annex	7.12 Positioning and synchronous control
	7.13 Protective Functions
	7.14 Parameter sets
	7.15 Special Functions
	7.16 CP-Parameter definition

7.1.1 Overview of the ru-parameters ..... 7.1 - 3
7.1.2 Overview of the In-Parameters ..... 7.1 - 4
7.1.3 Overview of the Sy-parameters ..... 7.1 - 4
7.1.4 Explanation to Parameter Description ..... 7.1 - 5
7.1.5 Description of the ru-Parameters ..... 7.1 - 5
7.1.7 Description of the SY (System) - Parameters ..... 7.1 - 20

7. Functions

7.1 Operating and appliance date

The parameter groups „ru“, „In“ and „SY“ are described in this chapter. They serve for the operational monitoring, error analysis and evaluation as well as for the unit identification.

7.1.1 Overview of the ru-parameters

The ru- (run) parameter group represents the multimeter of the inverter. Here speeds, currents, voltages etc. are displayed, with those a statement about the operating condition of the inverter can be made. Especially during startup or trouble shooting on a plant, this can turn out to be a great aid. Following parameters are available:

ru.00	Inverter status		ru.40	Hour meter
ru.01	Set value display		ru.41	Modulation on counter
ru.02	Ramp output display		ru.42	Modulation grade
ru.03	Actual frequency display		ru.43	Timer 1 display
ru.07	Actual value display		ru.44	Timer 2 display
ru.09	Encoder 1 speed		ru.45	Actual switching frequency
ru.10	Encoder 2 speed		ru.46	Motor temperature
ru.11	Set torque		ru.47	Set torque limit motoric
ru.12	Actual torque		ru.48	Set torque limit / generatoric
ru.13	Actual utilization		ru.49	Set torque / torque controller
ru.14	Peak utilization		ru.52	External PID out display
ru.15	Apparent current		ru.53	AUX display
ru.16	Peak apparent current		ru.54	Actual position
ru.17	Active current		ru.56	Set position
ru.18	DC-link voltage		ru.58	Angle difference
ru.19	DC-link voltage/peak value		ru.59	Factor rotor adaption
ru.20	Output voltage		ru.60	Act. position index
ru.21	Terminal Status		ru.61	Target position
ru.22	Internal input state		ru.63	Profil speed
ru.23	Output condition state		ru.68	Rated DC voltage
ru.24	State of output flags		ru.69	Distance reference point to zero signal
ru.25	Output Terminal Status		ru.71	Teach position
ru.26	Active parameter set		ru.73	Set torque in percent
ru.27	AN1 display before amplification		ru.74	Act. torque in percent
ru.28	AN1 display after amplification		ru.78	Act. val. display in percent
ru.29	AN2 display before amplification		ru.79	Abs. speed value (EMK)
ru.30	AN2 display after amplification		ru.80	Digital output state
ru.31	AN3 display before amplification		ru.81	Active power
ru.32	AN3 display after amplification		ru.82	Ramp val. display high-resolution
ru.33	Analog output 1 Display before amplification		ru.83	Actual val. display high-resolution
ru.34	Analog output 1 Display after amplification		ru.84	Accessible rel. position
ru.35	Analog output 2 Display before amplification		ru.85	Peak encoder 1 speed
ru.36	Analog output 2 Display after amplification		ru.86	Peak encoder 2 speed
ru.37	Motorpoti actual value		ru.87	Magnetizing current
ru.38	Power stage temperature		ru.89	Actual source speed
ru.39	Overload integrator (E.OL)		ru.90	Max. torque in percent

7.1.2 Overview of the In-Parameters

The In- (Information) parameter group contains data and information on the identification of the hardware and software as well as on the type and number of the errors that occurred. Following parameters are available:

In.00	Inverter type
In.01	Rated inverter current
In.03	Max. switching frequency
In.04	Rated switching frequency
In.06	Software version
In.07	Software date
In.10	Serial no.(date)
In. 11	Serial no.(count)
In.12	Serial number (Ackn.-No. High)
In. 13	Serial number (Ackn.-No. Low)
In.14	Customer number (High)
In.15	Customer number (Low)
In.16	QS-Number
In. 17	Temperature mode
In.22	User parameter 1
In.23	User parameter 2
In. 24	Last error
In. 25	Error Assistance
In.26	E.OC error counter
In.27	E.OL error counter
In.28	E.OP error counter
In. 29	E.OH error counter
In.30	E.OHI error counter
In.31	KEB Hiperface
In.32	Interface softw. date

7.1.3 Overview of the Sy-parameters

The Sy- (system) parameter group contains system specific parameters. Following parameters are available:

SY.02	Inverter identifier	SY.42	Status word high
SY.03	Power unit code	SY.43	Control word long
SY.06	Inverter address	SY.44	Status word long
SY.07	Baud Rate ext. Bus	SY.50	Control word low
SY.08	Bus synchron time	SY. 51	Status word low
SY.09	HSP5 watchdog time	SY.52	Set speed value
SY.11	Baud Rate int. Bus	SY.53	Actual speed value
SY.32	Scope Timer	SY.56	Start display address
SY.41	Control word high		

7.1.4 Explanation to Parameter Description

Legend:

Addr.	=	Address				
PG	=	programmable	→	+	=	programmable
				-	=	not programmable
E	=	ENTER	→	+	=	yes
				-	=	no
R	=	Right	→	RO	=	Read only
				RW	=	Read and write
				KB	=	Keyboard
[1)]	=	Resolution and value range depending on ud.02				
Min. value	=	Min. value				
Max. value	=	Max. value				
Res.	=	Resolution				
Default	=	Default value				
[?]	=	unit				

7.1.5 Description of the ru-Parameters

Parameter		Addr.	R	PG	E	Min. value	Max. value	Res.	[?]	Default
ru.00	Inverter status	0200h	RO	-	-	0	255	1	-	0
The inverter status shows the current operating condition of the regenerative unit. In the case of an error the current error message is displayed, even if the display has already been reset with ENTER (error-LED on the operator is still blinking). For more information about status messages as well as its cause and removal refer to Chapter 8 „Error Diagnosis“.										

Parameter		Addr.	R	PG	E	Min. value	Max. value	Res.	[?]	Default
ru.01	Set value display [1)]	0201h	RO	-	-	-4000	4000	0,125	rpm	-
Display of the actual set speed. For control reasons the set speed is displayed even if control release or direction of rotation are not switched. If no direction of rotation is set, the set speed for clockwise rotation (forward) is displayed. A counter-clockwise rotary field (reverse) is represented by a negative sign. Precondition is the phase-correct connection of the motor.										

Parameter		Addr.	R	PG	E	Min. value	Max. value	Res.	[?]	Default
ru.02	Set value display [1)]	0202h	RO	-	-	-4000	4000	0,125	rpm	-
The indicated actual speed corresponds to the rotary field speed given out at the ramp output. The representation is the same as at ru.01.										

Parameter		Addr.	R	PG	E	Min. value	Max. value	Res.	[?]	Default
ru.03	Actual frequency display [1)]	0203h	RO	-	-	-400	400	0,125	Hz	-
The indicated actual frequency corresponds to the rotary field frequency given out at the inverter output. The representation is the same as at ru.01.										

Parameter		Addr.	R	PG	E	Min. value	Max. value	Res.	[?]	Default
ru.07	Actual value display 1)	0207h	RO	-	-	-4000	4000	0,125	rpm	-
Depending on the adjusted actual source (cS.01) the actual speed of encoder input 1 and/or 2 is displayed.										

Parameter		Addr.	R	PG	E	Min. value	Max. value	Res.	[?]	Default
ru.09	Encoder 1 speed 1)	0209h	RO	-	-	-4000	4000	0,125	rpm	-
ru.10	Encoder 2 speed 1)	0210h	RO	-	-	-4000	4000	0,125	rpm	-
The displayed speed corresponds to the actual speed measured at the encoder input 1 or 2.										

Parameter		Addr.	R	PG	E	Min. value	Max. value	Res.	[?]	Default
ru.11	Set torque	020Bh	RO	-	-	-10000	10000	0,01	Nm	-
The indicated value corresponds to the current set torque.										

Parameter		Addr.	R	PG	E	Min. value	Max. value	Res.	[?]	Default
ru.12	Actual torque	020Ch	RO	-	-	-10000	10000	0,01	Nm	-
The indicated value corresponds to the actual torque.										

Parameter		Addr.	R	PG	E	Min. value	Max. value	Res.	[?]	Default
ru.13	Actual utilization	020Dh	RO	-	-	0	65535	1	%	-
Display of the current utilization referred to the rated current of the inverter. Only positive values are indicated, thus it is not possible to differentiate between a motoric or generatoric operation.										

Parameter		Addr.	R	PG	E	Min. value	Max. value	Res.	[?]	Default
ru.14	Peak utilization	020Eh	RO	-	-	0	65535	1	%	-
ru.14 permits the detection of short-time peak loads within an operating cycle. The highest occurred value of ru.13 is stored in ru.14. The peak value memory can be cleared by pressing the keys UP, DOWN or ENTER and by bus through writing any chosen value to the address of ru.14. The switch off of the inverter also clears the memory.										

Parameter		Addr.	R	PG	E	Min. value	Max. value	Res.	[?]	Default
ru.15	Apparent current	020Fh	RO	-	-	0	6553,5	0,1	A	-
Display of the current apparent current.										

Parameter		Addr.	R	PG	E	Min. value	Max. value	Res.	[?]	Default
ru.16	Apparent current	0210h	RO	-	-	0	6553,5	0,1	A	-
ru.16 permits the detection of short-time peak currents within an operating cycle. The highest occurred value of ru.15 is stored in ru.16. The peak value memory can be cleared by pressing the keys UP, DOWN or ENTER and by bus through writing any chosen value to the address of ru.16. The switch off of the inverter also clears the memory.										

Parameter		Addr.	R	PG	E	Min. value	Max. value	Res.	[?]	Default
ru.17	Active current	0211h	RO	-	-	-3276,7	3276,7	0,1	A	-
Display of the torque-forming active current. Negative current corresponds to generatoric operation, positive current corresponds to motoric operation. The more precise the motor data are entered, the more precise is the indication of the active current. The maximum values depend on the size of the inverter.										

Parameter		Addr.	R	PG	E	Min. value	Max. value	Res.	[?]	Default
ru.18	DC-link voltage	0212h	RO	-	-	0	1000	1	V	-

Display of current DC-link voltage. Typical values:

Normal operation:	**230V**-class approx. 300-330V	Over volt. (E.OP)	approx. 400 V	Under volt. (E.UP)	approx. 216 V
	400V-class approx. 530-620V		approx. 800 V		approx. 240 V

Parameter		Addr.	R	PG	E	Min. value	Max. value	Res.	[?]	Default
ru.19	DC-link voltage/peak value	0213h	RO	-	-	0	1000	1	V	-

ru.19 permits the detection of short-time voltage rises within an operating cycle. The highest occurred value of ru.18 is stored in ru.19. The peak value memory can be cleared by pressing the keys UP, DOWN or ENTER and by bus through writing any chosen value to the address of ru.19. The switch off of the inverter also clears the memory.

Parameter		Addr.	R	PG	E	Min. value	Max. value	Res.	[?]	Default
ru.20	Output voltage	0214h	RO	-	-	0	1000	1	V	-

Display of the current output voltage.

Parameter		Addr.	R	PG	E	Min. value	Max. value	Res.	[?]	Default
ru.21	Terminal Status	0215h	RO	-	-	0	4095	1	-	-

Display of the digital inputs controlled currently. The logic levels are indicated at the input terminals or at the internal inputs regardless of the following logic operations (also see Chapt. 7.3 „Digital inputs“). According to following table a specific decimal value is given out for each digital input. If several inputs are controlled, the sum of the decimal values is indicated.

Bit	Dec. value	Input	Terminal
0	1	ST (prog. input „control release/reset“)	X2A.16
1	2	RST (prog. input „reset“)	X2A.17
2	4	F (prog. input „forward“)	X2A.14
3	8	R (prog. input „reverse“)	X2A.15
4	16	I1 (prog. input 1)	X2A.10
5	32	I2 prog. input 2)	X2A.11
6	64	I3 (prog. input 3)	X2A.12
7	128	I4 (prog. input 4)	X2A.13
8	256	IA (internal input A)	no
9	512	IB (internal input B)	no
10	1024	IC (internal input C)	no
11	2048	ID (internal input D)	no

Parameter		Addr.	R	PG	E	Min. value	Max. value	Res.	[?]	Default
ru.22	Internal input state	0216h	RO	-	-	0	4095	1	-	-

Display of the digital external and internal inputs set currently. The input is only regarded as set if it is available as effective signal to the further processing (i.e. accepted through strobe, edge-triggering or logic operation). According to table like ru.21 a specific decimal value is given out for each digital input. If several inputs are controlled, the sum of the decimal values (see ru.21) is indicated (also see Chapt. 7.3 „Digital inputs“).

Parameter		Addr.	R	PG	E	Min. value	Max. value	Res.	[?]	Default
ru.23	Output condition state	0217h	RO	-	-	0	255	1	-	-

With parameters do.0...do.7 switching conditions can be selected, that serve as a base for setting the outputs. This parameter indicates which of the selected switching conditions are met before they are linked or inverted by programmable logic (also see Chapt. 7.3. „Digital outputs“). According to following table a specific decimal value is given out for the switching conditions. If several of the selected switching conditions are met, the sum of the decimal values is indicated.

Bit	Decimal value	Output
0	1	switching condition 0 (do.0)
1	2	Switching condition 1 (do.1)
2	4	Switching condition 2 (do.2)
3	8	Switching condition 3 (do.3)
4	16	Switching condition 4 (do.4)
5	32	Switching condition 5 (do.5)
6	64	Switching condition 6 (do.6)
7	128	Switching condition 7 (do.7)

Parameter		Addr.	R	PG	E	Min. value	Max. value	Res.	[?]	Default
ru.24	State of output flags	0218h	RO	-	-	0	255	1	-	-

Display of the output flags after logic step 1. The selected switching conditions are linked in logic step 1 (do.08...24) and indicated here (see chapt. 7.3 „Digital outputs“). According to following table a specific decimal value is given out for any output flags. If several output flags are set, the sum of the decimal values is indicated.

Bit	Decimal value	Output
0	1	Flag 0
1	2	Flag 1
2	4	Flag 2
3	8	Flag 3
4	16	Flag 4
5	32	Flag 5
6	64	Flag 6
7	128	Flag 7

Parameter		Addr.	R	PG	E	Min. value	Max. value	Res.	[?]	Default
ru.25	Output Terminal Status	0219h	RO	-	-	0	255	1	-	-

Display of the external and internal digital output set currently. According to following table a specific decimal value is given out for each digital output. If several outputs are set, the sum of the decimal values is indicated.

Bit	Decimal value	Output	Terminal
0	1	O1 (transistor output 1)	X2A.18
1	2	O2 (transistor output 2)	X2A.19
2	4	R1 (relay RLA,RLB,RLC)	X2A.24...26
3	8	R2 (relay FLA,FLB,FLC)	X2A.27...29
4	16	OA (internal output A)	no
5	32	OB (internal output B)	no
6	64	OC (internal output C)	no
7	128	OD (internal output D)	no

Parameter		Addr.	R	PG	E	Min. value	Max. value	Res.	[?]	Default
ru.26	Active parameter set	021Ah	RO	-	-	0	7	1	-	-

The KEB COMBIVERT can have access to 8 parameter sets (0-7). Through programming the inverter can change parameter sets autonomously and can thus start different modes of operation. This parameter shows the parameter set, with which the inverter is operating currently. Independent of it another parameter set can be edited by bus (also see chapter 7.16).

Parameter		Addr.	R	PG	E	Min. value	Max. value	Res.	[?]	Default
ru.27	Analog input 1 / Display before amplification	021Bh	RO	-	-	-100	100	0,1	%	-

This parameter indicates the value of the analog signal AN1 on the differential voltage input (terminal X2A.1 / X2A.2) before signal amplification in percent. In dependence on An.00 the indicated value of 0...±100 % corresponds to: 0...±10 V; 0...±20 mA or 4...20 mA (also see chapt. 7.2 „Analog inputs“).

Parameter		Addr.	R	PG	E	Min. value	Max. value	Res.	[?]	Default
ru.28	Analog input 1 / Display before amplification	021Ch	RO	-	-	-400	400	0,1	%	-

This parameter shows the value of the analog signal AN1 in percent after passing the characteristic amplifier. The range of indication is limited to ±400 % (also see chapt. 7.2 „Analog inputs“).

Parameter		Addr.	R	PG	E	Min. value	Max. value	Res.	[?]	Default
ru.29	Analog input 2 / Display before amplification	021Dh	RO	-	-	-100	100	0,1	%	-

This parameter shows the value of the analog signal AN2 on the differential voltage input (terminal X2A.3 / X2A.4) before signal amplification in percent. In dependence on An.10 the indicated value of 0...±100 % corresponds to: 0...±10 V; 0...±20 mA or 4...20 mA (also see chapt. 7.2 „Analog inputs“).

Parameter		Addr.	R	PG	E	Min. value	Max. value	Res.	[?]	Default
ru.30	Analog input 1 / Display before amplification	021Eh	RO	-	-	-400	400	0,1	%	-
This parameter shows the value of the analog signal AN2 in percent after passing the characteristic amplifier. The range of indication is limited to ±400 % (also see chapt. 7.2 „Analog inputs“).										

Parameter		Addr.	R	PG	E	Min. value	Max. value	Res.	[?]	Default
ru.31	Analog input 3 / Display before amplification	021Eh	RO	-	-	-100	100	0,1	%	-
This parameter shows the value of the analog signal on the optionally analog input AN3 before signal amplification in percent. In dependence on An.10 the indicated value of 0...±100 % corresponds to: 0...±10 V (see also chapt. 7.2 „Analog inputs“).										

Parameter		Addr.	R	PG	E	Min. value	Max. value	Res.	[?]	Default
ru.32	Analog input 3 / Display before amplification	021Fh	RO	-	-	-400	400	0,1	%	-
This parameter shows the value of the analog signal on the optionally analog input AN3 after signal amplification in percent. The range of indication is limited to ±400 % (also see chapt. 7.2 „Analog inputs“).										

Parameter		Addr.	R	PG	E	Min. value	Max. value	Res.	[?]	Default
ru.33	Analog output 1 / Display before amplification	0221h	RO	-	-	-400	400	0,1	%	-
This parameter shows the value of the analog signal ANOUT1 in percent before passing the characteristic amplifier (also see 7.2 „Analog outputs“).										

Parameter		Addr.	R	PG	E	Min. value	Max. value	Res.	[?]	Default
ru.34	Analog output 1 / Display after amplification	0222h	RO	-	-	-115	115	0,1	%	-
This parameter shows the value of the signal given out on analog output ANOUT1 (terminal X2A.5) in percent. A value of 0...±100 % correponds to an output signal of 0...±11,5 V (also see chapt. 7.2 „Analog outputs“).										

Parameter		Addr.	R	PG	E	Min. value	Max. value	Res.	[?]	Default
ru.35	Analog output 1 / Display before amplification	0223h	RO	-	-	-400	400	0,1	%	-
This parameter shows the value of the analog signal ANOUT1 in percent before passing the characteristic amplifier (also see 7.2 „Analog outputs“).										

Parameter		Addr.	R	PG	E	Min. value	Max. value	Res.	[?]	Default
ru.36	Analog output 1 / Display after amplification	0224h	RO	-	-	-115	115	0,1	%	-
This parameter shows the value of the signal given out on analog output ANOUT2 (terminal X2A.6) in percent. A value of 0...±100 % correponds to an output signal of 0...±11,5 V (also see chapt. 7.2 „Analog outputs“).										

Parameter		Addr.	R	PG	E	Min. value	Max. value	Res.	[?]	Default
ru.37	Motorpoti actual value	0225h	RO	-	-	-100	100	0,01	%	-
The motorpoti-function in the KEB COMBIVERT imitates a mechanical, motor operated potentiometer. The control occurs via 2 programmable inputs („poti up“ and „poti down“). The display is limited by oP.5354 . The adjustment of the motorpoti is done with the parameters oP.50...oP.59 (also see chapt. 7.15.3 „Motorpoti“). By way of the bus the motorpoti can be set to any chosen value between -100...100%. In addition to the inputs the motorpoti can be operated with the keys „UP“ and „DOWN“. Then the rate of change is not constant.										

Parameter		Addr.	R	PG	E	Min. value	Max. value	Res.	[?]	Default
ru.38	Power stage temperature	0226h	RO	-	-	0	150	1	°C	-
ru.38 shows the current power stage temperature of the inverter.										

Parameter		Addr.	R	PG	E	Min. value	Max. value	Res.	[?]	Default
ru.39	Overload integrator (E.OL)	0227h	RO	-	-	0	100	1	%	-
In order to preclude „E.OL“ - errors by too high load (load reduction in due time), the internal count of the OL-counter can be made visible with this indication. At 100 % the inverter switches off with error „E.OL“. The error can be reset only after a cooling time (blinking display „E.nOL“).										

Parameter		Addr.	R	PG	E	Min. value	Max. value	Res.	[?]	Default
ru.40	Hour meter	0228h	RO	-	-	0	65535	1	h	-
The operating hours meter shows the time the inverter was switched on. The indicated value comprises all operating phases. On reaching the maximum value (approx. 7.5 years) the indication remains on the maximum value.										

Parameter		Addr.	R	PG	E	Min. value	Max. value	Res.	[?]	Default
ru.41	Modulation on counter	0229h	RO	-	-	0	65535	1	h	-
The modulation hours meter shows the time the inverter was active (power modules controlled). On reaching the maximum value (approx. 7.5 years) the indication remains on the maximum value.										

Parameter		Addr.	R	PG	E	Min. value	Max. value	Res.	[?]	Default
ru.42	Modulation grade	022Ah	RO	-	-	0	110	1	%	-
The modulation factor shows the output voltage in percent. 100 % correspond to the input voltage (no-load). At a value of > 100 % the inverter works with overmodulation.										

Parameter		Addr.	R	PG	E	Min. value	Max. value	Res.	[?]	Default
ru.43	Timer 1 display	022Bh	RO	-	-	0	655,35	0,01	-	-
The count of the free-programmable timer 1 is indicated. The display is done either in seconds, in hours or in slopes/100 (see LE.21). The counter can be adjusted to any chosen value by keyboard or bus. The programming of the counter is done with the parameters LE.17...LE.21 (also see chapt. 7.15.4 „Timer“).										

Parameter		Addr.	R	PG	E	Min. value	Max. value	Res.	[?]	Default
ru.44	Timer 2 display	022Ch	RO	-	-	0	110	1	%	-
The count of the free-programmable timer 2 is indicated. The display is done either in seconds, in hours or in slopes/100 (see LE.26). The counter can be adjusted to any chosen value by keyboard or bus. The programming of the counter is done with the parameters LE.22...LE.26 (also see chapt. 7.15.4 „Timer“).										

Parameter		Addr.	R	PG	E	Min. value	Max. value	Res.	[?]	Default
ru.45	Actual switching frequency	022Dh	RO	-	-	0	4	1	-	-

Shows the current switching frequency of the inverter. The displayed values correspond to the following switching frequencies:

0 = 2 kHz	1 = 4 kHz	2 = 8 kHz	3 = 12 kHz	4 = 16 kHz	

Parameter		Addr.	R	PG	E	Min. value	Max. value	Res.	[?]	Default
ru.46	Motor temperature (opt.)	022Eh	RO	-	-	0	255: off	1	°C	-

Indicates the current motor temperature. Precondition for this function is aspecial power circuit. The temperature detection is connected to the terminals T1/T2.

0:	T1/T2 closed
253, 254:	cable breakage; short circuit; detection error
255:	T1/T2 open

Parameter		Addr.	R	PG	E	Min. value	Max. value	Res.	[?]	Default
ru.47	Actual torque limit motor	022Fh	RO	-	-	-10000	10000	0,01	Nm	-

This parameter indicates the actual adjusted set torque limit for motor operation.

Parameter		Addr.	R	PG	E	Min. value	Max. value	Res.	[?]	Default
ru.48	Actual torque limit generator	0230h	RO	-	-	-10000	10000	0,01	Nm	-

This parameter displays the currently adjusted set torque limit for generatoric operation.

Parameter		Addr.	R	PG	E	Min. value	Max. value	Res.	[?]	Default
ru.49	Set torque / torque controller	0231h	RO	-	-	-10000	10000	0,01	Nm	-

This parameter displays the preadjusted setpoint torque at the input of the torque controller.

Parameter		Addr.	R	PG	E	Min. value	Max. value	Res.	[?]	Default
ru.50	Set torque / torque controller	0232h	RO	-	-	-10000	10000	0,01	Nm	-

This parameter displays the preadjusted setpoint torque at the input of the torque controller.

Parameter		Addr.	R	PG	E	Min. value	Max. value	Res.	[?]	Default
ru.52	Ext. PID out display	0234h	RO	-	-	-100,0	100,0	0,1	%	-

A universal PI-controller is integrated into the inverter. It can be used externally as well as internally. So that the controller is as independent as possible, the displayed manipulated variable, referring to a +/- signal, is output in percent.

Parameter		Addr.	R	PG	E	Min. value	Max. value	Res.	[?]	Default
ru.53	AUX display	0235h	RO	-	-	-400,0	400,0	0,1	%	-

The AUX input is setting with An.30. This parameter shows the value of the analog signal AUX in percent. The range of indication is limited to ±400 % (also see Chapt. 6.2 „Analog inputs“).

Parameter		Addr.	R	PG	E	Min. value	Max. value	Res.	[?]	Default
ru.54	Actual position	0236h	RO	-	-	-2147483647	2147483647	1	Inc	-
ru.54 displays the absolute actual position in increments.										

Parameter		Addr.	R	PG	E	Min. value	Max. value	Res.	[?]	Default
ru.55	Set position	0237h	RO	-	-	-2147483647	2147483647	1	Inc	-
ru.55 displays the absolute set position in increments.										

Parameter		Addr.	R	PG	E	Min. value	Max. value	Res.	[?]	Default
ru.58	Angle difference	023Ah	RO	-	-	-2147483647	2147483647	1	Inc	-
This parameter displays the actual angle difference between set and actual position.										

Parameter		Addr.	R	PG	E	Min. value	Max. value	Res.	[?]	Default
ru.59	Factor rotor adaption	023Bh	RO	-	-	0	100	1	%	-
This parameter displays the actual factor of the rotor adaption.										

Parameter		Addr.	R	PG	E	Min. value	Max. value	Res.	[?]	Default
ru.60	act. position index	023Ch	RO	-	-	0	255	1	-	-
This parameter displays the actual position index of the position profile.										

Parameter		Addr.	R	PG	E	Min. value	Max. value	Res.	[?]	Default
ru.61	Target position	023Dh	RO	-	-	-2147483647	2147483647	1	Inc	-
This parameter displays the target position of the actual position index.										

Parameter		Addr.	R	PG	E	Min. value	Max. value	Res.	[?]	Default
ru.63	Profil speed	023Fh	RO	-	-	-4000	4000	0,125	rpm	-
This parameter displays the speed of the actual position index.										

Parameter		Addr.	R	PG	E	Min. value	Max. value	Res.	[?]	Default
ru.68	Rated DC voltage	0244h	RO	-	-	0	1000	1	V	-
This parameter displays the rated DC link voltage automatically determined by the inverter. The value is measured at switch-on.										

Parameter		Addr.	R	PG	E	Min. value	Max. value	Res.	[?]	Default
ru.69	Distance ref.- zeropoint	0245h	RO	-	-	-2147483647	2147483647	1	Inc	-
This parameter displays the distance to the zeropoint after relieve the reference switch.										

Parameter		Addr.	R	PG	E	Min. value	Max. value	Res.	[?]	Default
ru.71	Teach position	0247h	RO	-	-	-2147483647	2147483647	1	Inc	-
This parameter displays the current teach position. This position remains until a new position is teached.										

Parameter		Addr.	R	PG	E	Min. value	Max. value	Res.	[?]	Default
ru.73	Set torque in percent	0249h	RO	-	-	-100	100	0,1	%	-
This parameter displays the adjusted set torque (ru.11) in percent at the input referring to the absolute torque reference (cs.19).										

Parameter		Addr.	R	PG	E	Min. value	Max. value	Res.	[?]	Default
ru.74	Act. torque in percent	024Ah	RO	-	-	-100	100	0,1	%	-
This parameter displays the actual torque display (ru.12) in percent at the input referring to the absolute torque reference (cs.19).										

Parameter		Addr.	R	PG	E	Min. value	Max. value	Res.	[?]	Default
ru.78	Act. value display in percent	024Eh	RO	-	-	-100	100	0,1	%	-
This parameter displays the actual value display (ru.07) in percent referring to the max. reference forward (oP.10).										

Parameter		Addr.	R	PG	E	Min. value	Max. value	Res.	[?]	Default
ru.79	Absolute speed value (EMC)	024Fh	RO	-	-	-4000	4000	0,125	rpm	-
In order to protect the inverter against overvoltage in the field weakening range, an EMC dependent speed should not be exceeded. This calculated value has priority to all other limits and it is displayed in ru.79.										

Parameter		Addr.	R	PG	E	Min. value	Max. value	Res.	[?]	Default
ru.80	Digital output state	0250h	RO	-	-	0	255	1	-	-

With do.51 the digital output signals can be assigned to the hardware outputs (see chapter 7.3.). This parameter shows the digital output state of the output signals in accordance with the following table. If several outputs are set, the sum of the decimal values is indicated.

Bit	Dec. value	Output	Terminal
0	1	O1 (transistor output 1)	X2A.18
1	2	O2 (transistor output 2)	X2A.19
2	4	R1 (relay RLA,RLB,RLC)	X2A.24...26
3	8	R2 (relay FLA,FLB,FLC)	X2A.27...29
4	16	OA (internal output A)	no
5	32	OB (internal output B)	no
6	64	OC (internal output C)	no
7	128	OD (internal output D)	no

Parameter		Addr.	R	PG	E	Min. value	Max. value	Res.	[?]	Default
ru.81	Active power	0251h	RO	-	-	-400,00	400,00	0,01	kW	-
The active power of the inverter is displayed with parameter ru.81. Negative values are displayed during generatoric operation.										

Parameter		Addr.	R	PG	E	Min. value	Max. value	Res.	[?]	Default
ru.82	Ramp val. display high-resolution	0252h	RO	-	-	-2147483647	2147483647	1	-	0
The ramp output is displayed in high-resolution with ru.82.										

Parameter		Addr.	R	PG	E	Min. value	Max. value	Res.	[?]	Default
ru.83	Act. val. display high-res.	0253h	RO	-	-	-2147483647	2147483647	1	-	0

Parameter	Addr.	R	PG	E	Min. value	Max. value	Res.	[?]	Default
The actual value is displayed in high-resolution with ru.83.									

Parameter		Addr.	R	PG	E	Min. value	Max. value	Res.	[?]	Default
ru.84	Accessible rel. position	0254h	RO	-	-	-2147483647	2147483647	1	Inc	0
The accessible relative position is displayed with ru.84.										

Parameter		Addr.	R	PG	E	Min. value	Max. value	Res.	[?]	Default
ru.85	Peak encoder 1 speed	0255h	RO	-	-	0	4095,875	0,125	rpm	0
The actual speed of encoder 1 is displayed with ru.85.										

Parameter		Addr.	R	PG	E	Min. value	Max. value	Res.	[?]	Default
ru.86	Peak encoder 2 speed	0256h	RO	-	-	0	4095,875	0,125	rpm	0
The peak value of encoder 2 is displayed with ru.86.										

Parameter		Addr.	R	PG	E	Min. value	Max. value	Res.	[?]	Default
ru.87	Magnetizing current	0257h	RO	-	-	-3276,7	3276,7	0,1	A	0
The magnetizing current is displayed in ru.87.										

Parameter		Addr.	R	PG	E	Min. value	Max. value	Res.	[?]	Default
ru.89	Actual source speed	0259h	RO	-	-	-4000	4000	0,125	rpm	0
The frequency of the actual value source is displayed with ru.89.										

Parameter		Addr.	R	PG	E	Min. value	Max. value	Res.	[?]	Default
ru.90	Max. torque in percent	025Ah	RO	-	-	0,00	400,00	0,01	%	0
ru.90 displays the maximum torque as percentagevalue.										

Parameter		Addr.	R	PG	E	Min. value	Max. value	Res.	[?]	Default
ru.92	Input power	025Ch	RO	-	-	-10000,00	10000,00	0,01	kW	0
The input power is displayed with ru.92.										

Parameter		Addr.	R	PG	E	Min. value	Max. value	Res.	[?]	Default
ru.93	Power loss	025Dh	RO	-	-	-10000,00	10000,00	0,01	kW	0
The power loss is displayed with ru.93.										

7.1.6 Description of the In-Parameters

Parameter		Addr.	R	PG	E	Min. value	Max. value	Res.	[?]	Default
In.00	Inverter type	0E00h								

Bit	Description	Meaning			
0	Inverter size	0	Size 32		
1			binary coded, e.g. 00101 for size 05		
2					
3					
4					
5	Voltage class	0	230 V	1	400 V
6	Power phases	1	3-phase		
7	free	0			
8	Housing size				
9		4	E housing		
10		15	P housing		
11		17	R housing		
12					
13	Control type	3	S control		
14					
15					

Parameter		Addr.	R	PG	E	Min. value	Max. value	Res.	[?]	Default
In.01	Inverter rated current	0E01h	RO	-	-	LTK	710	0,1	A	-
Display of the inverter rated current in A. The value is determined from the power circuit identification (P-ID) and cannot be changed.										

Parameter		Addr.	R	PG	E	Min. value	Max. value	Res.	[?]	Default
In.03	Max. switching frequency	0E03h	RO	-	-	0	4	1	-	-
Display of the maximum possible switching frequency in kHz for this inverter. The displayed values correspond to the following switching frequencies: 0 = 2 kHz 1 = 4 kHz 2 = 8 kHz 3 = 12 kHz 4 = 16 kHz										

Parameter		Addr.	R	PG	E	Min. value	Max. value	Res.	[?]	Default
In.04	Rated carrier frequency	0E04h	RO	-	-	0	LTK	1	-	LTK
Display of the rated carrier frequency in kHz. The displayed values correspond to the following switching frequencies: 0 = 2 kHz 1 = 4 kHz 2 = 8 kHz 3 = 12 kHz 4 = 16 kHz										

Parameter		Addr.	R	PG	E	Min. value	Max. value	Res.	[?]	Default
In.06	Software version	0E06h	RO	-	-	0,00	9,99	1	-	-
Display of the software version number. 1. and 2. digit: Software version (e.g. 2.1) 3. digit: Special version (0 = standard)										

Parameter		Addr.	R	PG	E	Min. value	Max. value	Res.	[?]	Default
In.07	Software date	0E07h	RO	-	-	-	-	0,1	-	-
Display of the software date. The value contains day, month and year, from the year only the last digit is indicated. Example: Display = 2102.0 Date = 21.02.2000										

Parameter		Addr.	R	PG	E	Min. value	Max. value	Res.	[?]	Default
In.10	Serial number / date	0E0Ah	RO	-	-	0	65535	1	-	0
In. 11	Serial number / counter	0E0Bh	RO	-	-	0	65535	1	-	0
In.12	Serial number / AB-high	0E0Ch	RO	-	-	0	65535	1	-	0
In. 13	Serial number / AB-low	0E0Dh	RO	-	-	0	65535	1	-	0
In.14	Customer number / high	0E0Eh	RO	-	-	0	65535	1	-	0
In.15	Customer number / low	0E0Fh	RO	-	-	0	65535	1	-	0
In.16	QS number/ date	0E10h	RO	-	-	0	65535	1	-	0
The serial number and the customer number identify the inverter. The QS-number contains production internal information.										

Parameter		Addr.	R	PG	E	Min. value	Max. value	Res.	[?]	Default
In. 17	Temperature mode	0E11h	RO	-	-	0	LTK	1	-	LTK

Parameter In.17 displays in high byte the temperature mode of the inverter. The KEB COMBIVERT F5 in P housing is delivered as standard with switchable KTY84/PTC evaluation. The desired function is adjusted with Pn.72 and operates in accordance with the following table:

In. 17	Function of T1, T2	Pn.72	Resistance	Display ru.46	Error/ warning [1]
0xh	PTC (in accordance with DIN EN 60947-8)	-	< 750 Ω	T1-T2 closed	-
			0,75…1,65 kΩ (reset resistance)	T1-T2 closed	-
			1,65…4 kΩ (tripping resistance)	T1-T2 open	x
			> 4 kΩ	T1-T2 open	x
5xh	KTY84 (standard)	0	< 215 Ω	Detection error	x
			498 Ω	1°C	- [2]
			1 kΩ	100°C	x [2]
			1,722 kΩ	200°C	x [2]
			> 1811 Ω	Detection error 254	x
	PTC (in accordance with DIN EN 60947-8)	1	< 750 Ω	T1-T2 closed	-
			0,75…1,65 kΩ (reset resistance)	T1-T2 closed	-
			1,65…4 kΩ (tripping resistance)	T1-T2 open	x
			> 4 kΩ	T1-T2 open	x
6xh	PT100	-	on inquiry		
1)	The column is valid at factory setting and Ud.02 ≥ 4 (F5-Multi, Servo). At Ud.02 < 4 (F5-General) the function must be programmed accordingly with parameters Pn.12, Pn.13, Pn.62 and Pn.72.				
2)	The disconnection is depending on the adjusted temperature in Pn.62.				

Parameter		Addr.	R	PG	E	Min. value	Max. value	Res.	[?]	Default
In.22	User parameter 1	0E16h	R	-	-	0	65535	1	-	0
In.23	User parameter 1	0E17h	R	-	-	0	65535	1	-	0

This parameters are not assigned to any function and are available to the user for input.

Parameter		Addr.	R	PG	E	Min. value	Max. value	Res.	[?]	Default
In. 24	Last error	0E18h	R	-	-	0	255	1	-	-

In.24 stores the 8 errors that occurred last. The display is set-programmable. E. UP is not stored. The error messages are described in chapter 8. If the value 0 is written, (only possible with supervisor password), all error messages in all sets are deleted.

Parameter		Addr.	R	PG	E	Min. value	Max. value	Res.	[?]	Default
In. 25	Error Assistance	0E19h	RW	-	-	0	65535	1	-	0

Shows the last 8 errors that occurred (in the sets 0...7). The oldest error is in set 7. Between errors of the same type a difference time is determined and stored too.

Bit 0...11	Value	Description
	0...4094	Difference time in minutes
	4095	Difference time > 4094 minutes

Bit 12...15	Value	Error		Value	Error		Value	Error
	0	no error		3	E.OP		6...15	free
	1	E.OC		4	E.OH			
	2	E.OL		5	E.OHI			

Bit 16	Value	Description
	1	No decimal display at plaintext

Parameter		Addr.	R	PG	E	Min. value	Max. value	Res.	[?]	Default
In.26	E.OC error counter	0E1Ah	RO	-	-	0	65535	1	-	0
In.27	E.OL error counter	0E1Bh	RO	-	-	0	65535	1	-	0
In.28	E.OP error counter	0E1Ch	RO	-	-	0	65535	1	-	0
In. 29	E.OH error counter	0E1Dh	RO	-	-	0	65535	1	-	0
In.30	E.OHI error counter	0E1Eh	RO	-	-	0	65535	1	-	0

The error counters (for E.OC, E.OL, E.OP, E.OH, E.OHI) specify the total number of errors of each error type.

Parameter		Addr.	R	PG	E	Min. value	Max. value	Res.	[?]	Default
In.31	KEB-Hiperface	0E1Fh	RO	-	-	0	65535	1	-	-

In.31 shows the version of the KEB - Hiperface.

Parameter		Addr.	R	PG	E	Min. value	Max. value	Res.	[?]	Default
In.32	Interface softw. date	0E20h	RO	-	-	0	6553,5	0,1	-	-

In.32 shows the date of the interface software.

Parameter		Addr.	R	PG	E	Min. value	Max. value	Res.	[?]	Default
In.33	Interface software version	0E21h	RO	-	-	0	6553,5	1	-	-

In.33 shows the version of the interface software.

7.1.7 Description of the Sy (System) - Parameters

Parameter		Addr.	R	PG	E	Min. value	Max. value	Res.	[?]	Default
Sy.02	Inverter identifier	0002h	RO	-	-	0000	9999	1	hex	-
An unique number is assigned to each type of frequency inverter which identifies the inverter. This value is used for example by COMBIVIS to load the correct configuration files. Sy.02 can be written with the indicated value (e.g. for identification of download lists).										

Parameter		Addr.	R	PG	E	Min. value	Max. value	Res.	[?]	Default
Sy.03	Power unit code	0003h	RO	-	-	-255	255	1	-	-
On the basis of the power circuit identification the control recognizes the used power circuit, respectively a change of the power circuit and adjusts certain parameters accordingly. To accept a new P-Id enter positive values (see chap. 8 „E.Puch“).										

Parameter		Addr.	R	PG	E	Min. value	Max. value	Res.	[?]	Default
Sy.04	Configuration data selection	0004h	RO	-	-	0	24	1	-	-
Sy.05	Configuration data	0005h	RO	-	-	-32727	32767	1	-	-
This parameters give information about the appropriate config-data of the inverter.										

Parameter		Addr.	R	PG	E	Min. value	Max. value	Res.	[?]	Default
Sy.06	Power unit code	0006h	RW	-	+	0	239	1	-	1
In SY.06 can be adjusted, if the inverter shall be responded via "COMBIVIS" or another control.Values between 0 and 239 are possible, the default value is 1. If several inverters are operated on the bus simultaneously, it is absolutely necessary to assign different addresses to them, since otherwise it leads to communication failures because several inverters may answer at the same time. The description of the DIN 66019II protocol (C0.F5.01I-K001) contains further information to this.										

Parameter		Addr.	R	PG	E	Min. value	Max. value	Res.	[?]	Default
Sy.07	Power unit code	0007h	RW	-	+	0	6	1	-	5

Following values for the baud rate of the serial interface are possible:

Parameter value	Baud rate
0	1200 Baud
1	2400 Baud
2	4800 Baud
3	9600 Baud
4	19200 Baud
5 (default)	38400 Baud
6	55500 Baud

If the value for the baud rate is changed via the serial interface, it can be changed again only by the keyboard or after adapting the baud rate of the master, as no communication is possible with different baud rates of master and slave.
Should problems occur at the data transmission choose a transfer rate of maximal 38400 baud.

Parameter		Addr.	R	PG	E	Min. value	Max. value	Res.	[?]	Default
Sy.08	Bus synchron time	0008h	RW	-	+	0: off	65000	1	µs	0
The time, within which the control synchronized onto an external clock pulse (sercos), is entered in this parameter. If no sychnronization takes place, an error or status message (E.SbuS or A.SbuS) , depending on the adjusted behaviour, is output. The value „off“ deactivates the function.										

Parameter		Addr.	R	PG	E	Min. value	Max. value	Res.	[?]	Default
Sy.09	HSP5 watchdog time	0009h	RW	-	+	0: off	10,00	0,01	s	0
The HSP5 watchdog function monitors the communication of the HSP5 interface (control card - operator; or control card - PC). After expiration of an adjustable time (0,01...10 s) without incoming telegrams, the response adjusted in Pn.5 is triggered. The value „off“ deactivates the function.										

Parameter		Addr.	R	PG	E	Min. value	Max. value	Res.	[?]	Default
Sy.11	Baud rate int. bus	000Bh	RW	-	+	3	11	1	-	11

The transmission rate between operator/inverter or PC/inverter is determined with the internal baudrate. Following values are possible:

Value	Baud rate	Value	Baud rate	Value	Baud rate
3	9,6 kBaud	6	55,5 kBaud	9	115,2 kBaud
4	19,2 kBaud	7	57,6 kBaud	10	125 kBaud
5	38,4 kBaud	8	100 kBaud	11	250 kBaud

After Power-On it is always started with 38.4 kBaud and dependent on the operator higher set.

Parameter		Addr.	R	PG	E	Min. value	Max. value	Res.	[?]	Default
Sy.32	Scope Timer	0020h	RO	-	-	0	65535	1	-	0
The scope timer generates a time period of 1 ms. This can be used by external programs, e.g. scope, to represent time patterns. The timer counts from 0...65535 and starts again with 0 after an overflow.										

Parameter		Addr.	R	PG	E	Min. value	Max. value	Res.	[?]	Default
SY.41	Control word high	0029h	RW	-	+	0	65535	1	-	0
The control word is used for the state control of the inverter via bus. The control word long (Sy.43) consists of the two 16 bit parameters control word high (Sy.41) and Control word low (Sy.50). The status word is bit-coded. The description of the individual bits is found in chapter 10.1.9.										

Parameter		Addr.	R	PG	E	Min. value	Max. value	Res.	[?]	Default
SY.42	Status word high	002Ah	RO	-	-	0	65535	1	-	0
The current condition of the inverter can be readout with the status word. The status word long (Sy.44) consists of the two 16 bit parameters status word high (Sy.42) and status word low (Sy.51). The status word is bit-coded. The description of the individual bits is found in chapter 10.1.9.										

Parameter		Addr.	R	PG	E	Min. value	Max. value	Res.	[?]	Default
SY.43	Control word long	002Bh	RW	-	+	-2147483648	2147483647	1	-	0
The control word is used for the state control of the inverter via bus. The control word long (Sy.43) consists of the two 16 bit parameters control word high (Sy.41) and Control word low (Sy.50). The status word is bit-coded. The description of the individual bits is found in chapter 10.1.9.										

Parameter		Addr.	R	PG	E	Min. value	Max. value	Res.	[?]	Default
SY.44	Status word long	002Ch	RO	-	-	-2147483648	2147483647	1	-	0
The current condition of the inverter can be readout with the status word. The status word long (Sy.44) consists of the two 16 bit parameters status word high (Sy.42) and status word low (Sy.51). The status word is bit-coded. The description of the individual bits is found in chapter 10.1.9.										

Parameter		Addr.	R	PG	E	Min. value	Max. value	Res.	[?]	Default
SY.50	Control word low	0032h	RW	-	+	0	65535	1	-	0
The control word is used for the state control of the inverter via bus. The control word long (Sy.43) consists of the two 16 bit parameters control word high (Sy.41) and Control word low (Sy.50). The status word is bit-coded. The description of the individual bits is found in chapter 10.1.9.										

Parameter		Addr.	R	PG	E	Min. value	Max. value	Res.	[?]	Default
Sy. 51	Control word low	0033h	RO	-	-	0	65535	1	-	0
The current condition of the inverter can be readout with the status word. The status word long (Sy.44) consists of the two 16 bit parameters status word high (Sy.42) and status word low (Sy.51). The status word is bit-coded. The description of the individual bits is found in chapter 10.1.9.										

Parameter		Addr.	R	PG	E	Min. value	Max. value	Res.	[?]	Default
SY.52	Set speed value	0034h	RW	-	-	-32000	32000	1	rpm	0
Setting of the set speed value in the range of ±16000 rpm. The source of rotation direction is determined as the other absolute setpoint sources via oP.01. The setpoint source oP.00 must be adjusted to „5“ via Sy.52 for setpoint setting.										

Parameter		Addr.	R	PG	E	Min. value	Max. value	Res.	[?]	Default
SY.53	Actual speed value	0035h	RO	-	-	-32000	32000	1	rpm	0
The actual speed can be read out in rpm with this parameter. The direction of rotation is signalled by the sign.										

Parameter		Addr.	R	PG	E	Min. value	Max. value	Res.	[?]	Default
Sy.56	Start display address	0035h	RO	-	+	0	7FFFFh	1	hex	0203
Sy.56 adjusts the parameter address which shall be represented on switching on the operator. Operator parameters can also be adjusted as starting display. Only valid addresses are accepted. If there is adjusted an invalid address (neither in the inverter nor assigned in the operator) the operator searches for the next existing address of the parameter group. If this parameters is available in the CP-Mode, the setting becomes effective there. Otherwise CP.00 is indicated as start parameter.										

1. Introduction	7.1 Operating and appliance date
2. Summary	7.2 Analog in- and outputs I
3. Hardware	7.3 Digital in- and outputs
4. Operation	7.4 Setpoint-, rotation- and ramp adjustment
5. Selection of Operating Mode	7.5 Motor data and controller adjustments of the asynchronous motor
6. Initial Start-up	7.6 Motor data and controller adjustments of the synchronous motor
7. Functions	7.7 Speed control
8. Error Assistance	7.8 Torque display and -limiting
9. Project Design	7.9 Torque control
10. Networks	7.10 Current control, -limiting and switching frequencies
11. Parameter Overview	7.11 Speed measurement
12. Annex	7.12 Positioning and synchronous control
	7.13 Protective functions
	7.14 Parameter sets
	7.15 Special functions
	7.16 CP-Parameter definition

7.2.1 Summary description analog inputs ..... 7.2 - 3

7.2.2 Interface selection ..... 7.2 - 4
7.2.2.1 AN1 / AN2 (An.00, An.10) ..... 7.2 - 4
7.2.2.2 AN3 (An.20) ..... 7.2 - 5

7.2.3 Noise filter (An.01, An.11, An.21) ..... 7.2 - 5

7.2.4 Save mode (An.02, An.12, An.22) ..... 7.2 - 5
7.2.4.1 Input selection (An.03, An.13, An.23) ..... 7.2 - 6

7.2.5 Zero clamp (An.04, An.14, An.24) ..... 7.2 - 7

7.2.6 Gain of the input characteristics (An.05...07, An.15...17, An.25...27) ..... 7.2 - 8

7.2.7 Lower and upper limit (An.08, An.09, An.18, An.19, An.28, An.29) ..... 7.2 - 10

7.2.8 Selection REF input / AUX-function (An.30) ..... 7.2 - 11

7.2.9 Brief description analog outputs ..... 7.2 - 12

7.2.10 Output signals ..... 7.2 - 13

7.2.11 Analog output / display (ru.33...34 / ru.35...36) ..... 7.2 - 13

7.2.12 ANOUT 1/ -2/-3/-4/ function (An.31 / An.36 / An.41, An.47) ..... 7.2 - 14

7.2.13 Gain of Output Characteristic (An.33...35 / An.38...40 / An.43...45 / An.49...51) ..... 7.2 - 15

7.2.14 ANOUT 1...4 digitale setting (An.32 / 37 / 42 / 48) ..... 7.2 - 16

7.2 Analog in- and outputs I

7.2.1 Summary description analog inputs

By selecting an input interface (An.00 / 10) input AN1, e.g. AN2 can be adjusted to the applied input signal. By An.20 the third analog input can be switched additionally to AN1. Subsequently the analog inputs are smoothed in an electronic filter (An.01 / 11 / 21) by averaging. With An.02 / 12 / 22 a save mode can be adjusted and activated with a programmable input (An.03 / 13 / 23). To inhibit voltage fluctuations and ripple voltages around the zero point the analog signal can be faded out around the zero point up to ±10 % (An.04 / 14 / 24). In the characteristics amplifier the input signals can be influenced in X and Y direction as well as in the rise (An.05...07 / 15...17 / 25...27). At the output of the characteristic amplifier the signal can be limited to a minimum and a maximum value (An.08, 09 / 18, 19 / 28, 29). At the output of the block it can be defined with An.30 which analog signal serves as reference value and which one serves as auxiliary value. The ru-parameters are used for the indication of the analog signal before and after the amplification. The internal values are limited to ±400%.

Figure 7.2.1 Principle of the analog inputs

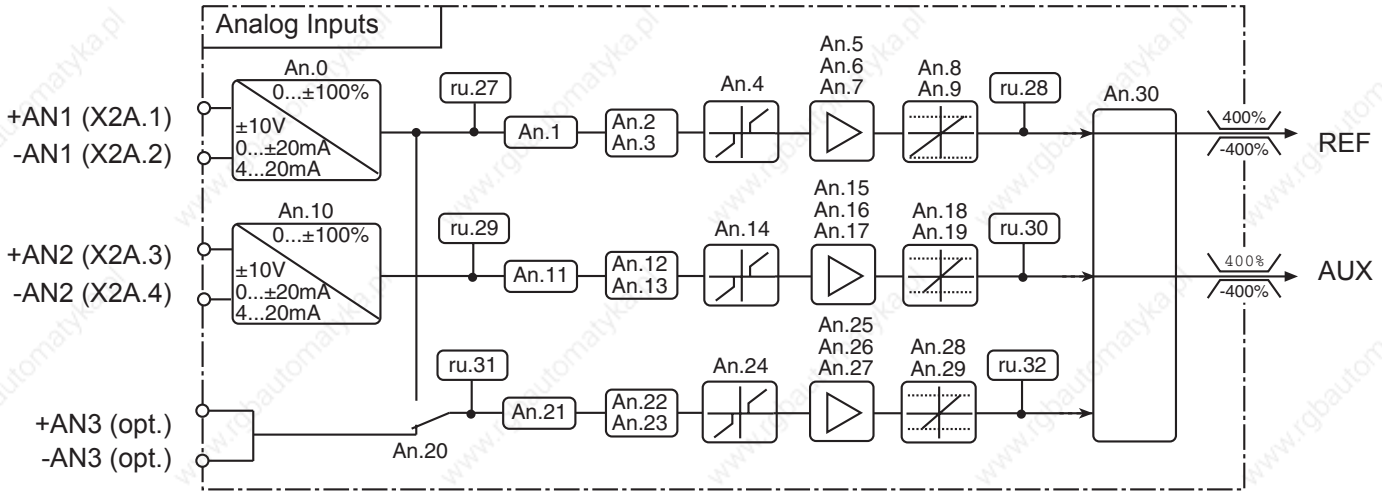

An.00	AN1 interface selection
An.01	AN1 noise filter
An.02	AN1 save mode
An.03	AN1 save trigger input selection
An.04	AN1 zero clamp
An.05	AN1 gain
An.06	AN1 offset X
An.07	AN1 offset Y
An.08	AN1 lower limit
An.09	AN1 upper limit
An.10	AN2 interface selection
An.11	AN2 noise filter
An.12	AN2 save mode
An.13	AN2 save trigger input selection
An.14	AN2 zero clamp
An.15	AN2 gain
An.16	AN2 offset X
An.17	AN2 offset Y
An.18	AN2 lower limit
An.19	AN2 upper limit
An.20	AN3 interface selection
An.21	AN3 noise filter
An.22	AN3 save mode
An.23	AN3 save trigger input selection
An.24	AN3 zero clamp
An.25	AN3 gain
An.26	AN3 offset X
An.27	AN3 offset Y
An.28	AN3 lower limit
An.29	AN3 upper limit
An.30	Selection REF input / AUX-function
ru.27	AN1 pre amplifier display
ru.28	AN1 post amplifier display
ru.29	AN2 pre amplifier display
ru.30	AN2 post amplifier display
ru.31	AN3 pre amplifier display
ru.32	AN3 post amplifier display

7.2.2 Interface selection

7.2.2.1AN1 / AN2 (An.00, An.10)

Depending on the selected interface (An.00 /An.10) the analog inputs AN1 and AN2 can process following input signals:

An.00 / An.10	= 0	0...±10 V (default)
	= 1	0...±20 mA
	= 2	4...20 mA

Figure 7.2.2.a Connection as differential voltage inputs 0...±10V DC

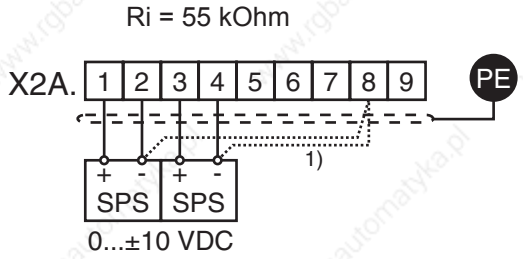

1) Connect equipotential bonding conductor only, if a potential difference of > 30 V exists between the controls. The internal resistance is reduced to 30 kOhm.

Figure 7.2.2.b Triggering with poti and internally reference voltage

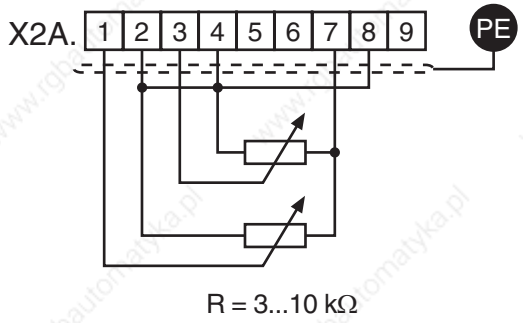

0...10V DC Ri=30kΩ (An.00 / An.10 = 0) The output CRF Terminal X2A.7 may be loaded with maximal 6mA!

Figure 7.2.2.c Triggering with current signal (An.00 / An.10 = 1 or 2)

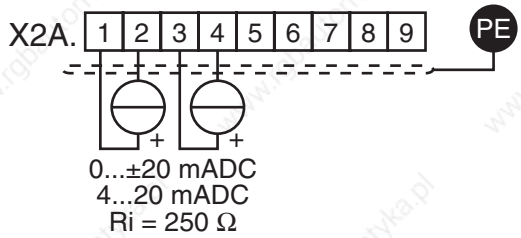

7.2.2.2AN3 (An.20)

With An.20 it is determined from where the 3. analog input value is received. Following values can be defined:

Value	Function
0	Analog option (AN3)
1	Analog input 1 (AN1)

7.2.3 Noise filter (An.01, An.11, An.21)

The noise filters shall suppress disturbances and ripples of the input signals. If the noise filter is switched off the analog inputs are queried every 1 ms and the recorded value is then transferred. The noise filter adjustments specify the number of sampled data for averaging.

An.01/ 11/ 21: Interference suppression filter	
Value	Function
0	off (no averaging)
1	double
2	4-fold
3	8-fold
4	16-fold

7.2.4 Save mode (An.02, An.12, An.22)

Coming from the input filter the save mode can be switched on with An.02 / An.12 / An.22. If now the programmable digital input (value 1) is set the analog signal is processed directly and written parallel into the non-volatile memory. As soon as the digital input is disconnected (value 0), the inverter continuos to run with value stored in the memory. Moreover, with An.02 / An.12 / An.22 it can be determined whether the memory contents are saved upon switch off.

An.02/ 12/ 22: Save mode		
Bit	Value	Meaning
0	0	Direct mode (default)
	1	Save mode
1	0	Do not delete memory contents at switch off (default)
	2	Delete memory contents at switch off

Figure 7.2.4 Save mode

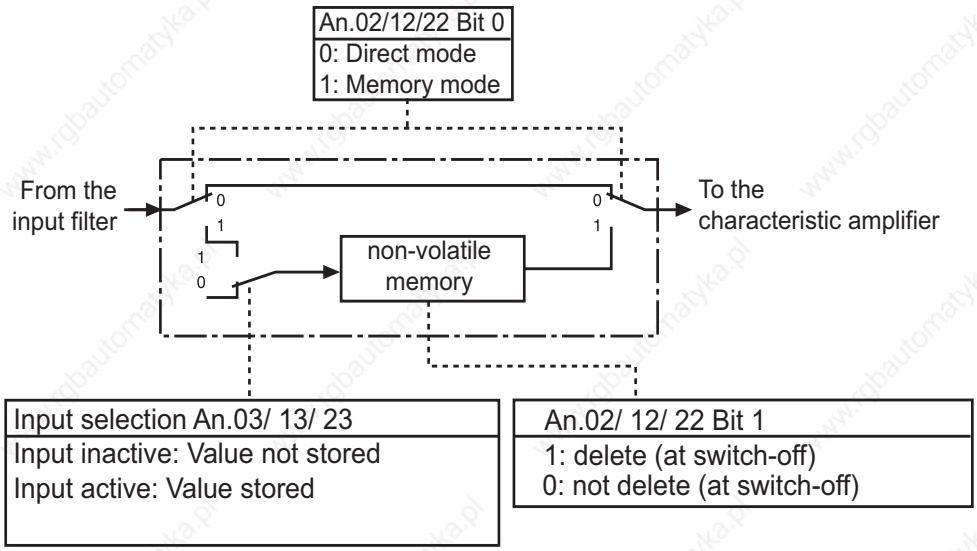

7.2.4.1Input selection (An.03, An.13, An.23)

With An.03 / An.13 / An.23 thedigital inputs for storing are selected according to the table on the next page (also see chapter 7.3.11 „Assignment of inputs“). In order to save an analog value, the save mode (An.02 / 12 / 22 = 1) must be switched on under An.02 / 12 / 22 and the selected input must be activated.

An.03, An.13, An.23: Input selection			
Bit	Decimal value	Input	Terminal
0	1	ST (prog. input „control release/reset“)	X2A.16
1	2	RST (prog. input „reset“)	X2A.17
2	4	F (prog. input „forward“)	X2A.14
3	8	R (prog. input „reverse“)	X2A.15
4	16	I1 (prog. input 1)	X2A.10
5	32	I2 prog. input 2)	X2A.11
6	64	I3 (prog. input 3)	X2A.12
7	128	I4 (prog. input 4)	X2A.13
8	256	IA (internal input A)	no
9	512	IB (internal input B)	no
10	1024	IC (internal input C)	no
11	2048	ID (internal input D)	no

7.2.5 Zero clamp (An.04, An.14, An.24)

Through capacitive as well as inductive coupling on the input lines or voltage fluctuations of the signal source, the motor connected to the inverter can still drift (tremble) during standstill in spite of the analog input filter. It is the task of the zero clamp to suppress this.
With the parameters An.04 / 14 / 24 the respective analog signals can be faded out within a range of 0...±10%. The adjusted value is valid for positive and negative input signals.
If a negative percent value is adjusted the hysteresis acts in addition to the zero point around the current set-point. Setpoint changes are accepted only if they are larger than the adjusted hysteresis.

Fig. 7.2.5 Zero clamp

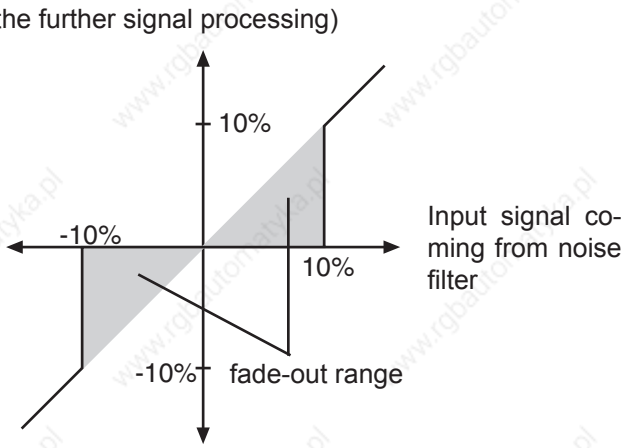

Value range

Input	Parameter	Value range	Resolution	Default value
AN1	An.04	0...±10 %	0,1%	0,2%
AN2	An.14			
AN3	An.24			

7.2.6 Gain of the input characteristics (An.05...07, An.15...17, An.25...27)

With these parameters the input signals can be adapted in X and Y direction as well as in the rise to the requirements. In the case of factory setting no zero point offset is adjusted, the rise (gain) is 1, i.e. the input value corresponds to the output value of this step (see Fig. 7.2.6.a). The output value is calculated according to following formula:

Out = Amplification • (In - Offset X) + Offset Y

Fig. 7.2.6.a Default: no Offset, Gain 1

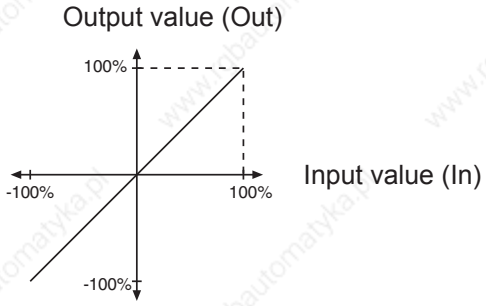

Input	AN1	AN2	AN3	Value range	Resolution	Default value
Amplification	An.05	An.15	An.25	-20,00...20,00	0,01	1,00
Offset X	An.06	An.16	An.26	-100,0%...100,0%	0,1%	0,0%
Offset Y	An.07	An.17	An.27	-100,0%...100,0%	0,1%	0,0%

By means of some examples, we want to show the possibilities of the function. According to Fig. 7.2.6.b

1. Adjustment of the X-Offset for input AN1 to 50 (%)
2. Adjustment of the amplification to 2

Figure 7.2.6.b X-Offset (An.06) =50%; amplification (An.5)=2.00

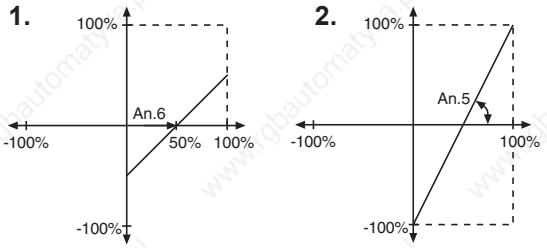

With these settings the entire speed range can be driven with 0...10 V via input AN1. (rotation direction = ±analog)

0% In	corresponds	-100% Out
50% In	corresponds	0% Out
100% In	corresponds	100% Out

According to Fig. 7.2.6.c

1. Adjustment of the X-Offset for the input AN1 to 75 (%)
2. Adjustment of the Y-Offset for the input AN1 to 100 (%)
3. Adjustment of the amplification to -1

Fig.7.2.6.c X-Offset (An.06)=75%; Y-Offset (An.07)= 100%; amplification. (An.5)= -1.00

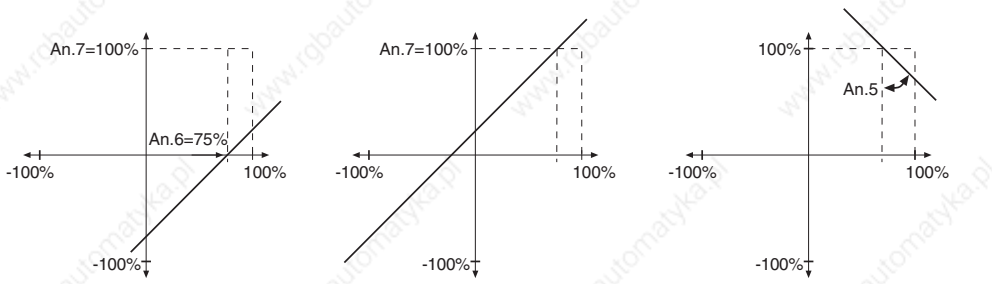

7

7.2.7 Lower and upper limit (An.08, An.09, An.18, An.19, An.28, An.29)

These parameters serve for the limiting of the analog signals after the amplifier stage.All parameters are adjustable in the range of -400...400 %. Since no mutual locking exists, it is to be ensured, that the lower limit is adjusted smaller than the upper limit.

An.08	AN1 lower limit
An.09	AN1 upper limit
An.18	AN2 lower limit
An.19	AN2 upper limit
An.28	AN3 lower limit
An.29	AN3 upper limit

Fig. 7.2.7 Limiting of the analog signal

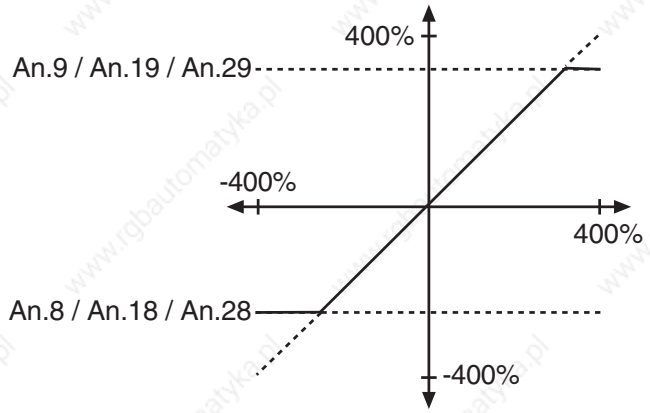

7.2.8 Selection REF input / AUX-function (An.30)

Assignment of the analog inputs:

An.30 Selection REF input / AUX function				
Bit	Function	Value	Description:	Explanation
0...2	Selection REF Input	0	AN1 input (ru.28)	Selection of the analog channel, which serves as REF input
		1	AN2 input (ru.30)	
		2	AN3 input (ru.32)	
3...5	AUX mode	0	Aux = source 1	Selection of the AUX input value calculation (addition, multiplication or absolute-value generation)
		8	Aux = source 1 + source 2	
		16	Aux = source 1 x (100% + source 2)	
		24	Aux = source 1 x source 2	
		32	Aux = source 1 absolute	
6...10	Aux 1 source	0	AN1 input (ru.28)	Source 1 = AN1 after amplification
		64	AN2 input (ru.30)	Source 1 = AN2 after amplification
		128	digital % (op.05)	Source 1 = value of oP.05
		192	Motorpoti (ru.37)	Source 1 = motorpoti value
		256	Ext. PID output display (ru.52)	Source 1 = PID controller base value
		320	AN3 input (ru.32)	Source 1 = AN 3 after amplification
		384	Encoder value channel 1 (ru.04 / 09)	Source 1 = ru.09 / reference value x 100%
		448	Encoder value channel 2 (ru.05 / 10)	Source 1 = ru.10 / reference value x 100%
11...15	Aux 2 source	0	AN1 input (ru.28)	Source 2 = AN1 after amplification
		2048	AN2 input (ru30)	Source 2 = AN2 after amplification
		4096	digital % (op.05)	Source 2 = value of oP.05
		6144	Motorpoti (ru.37)	Source 2 = motorpoti value
		8192	Ext. PID output display (ru.52)	Source 2 = PID controller base value
		10240	AN3 (ru.32)	Source 2 = AN 3 after amplification
		12288	Encoder value channel 1 (ru.04 / 09)	Source 2 = ru.09 / reference value x 100%
		14336	Encoder value channel 2 (ru.05 / 10)	Source 2 = ru.10 / reference value x 100%

The reference value for the calculation of the AUX signal of the encoder values of channel 1 or 2 is dependent on ud.02:

- Reference value = 1000 rpm in the mode 4000 (ud.02 = 4 or 10)
- Reference value = 2000 rpm in the mode 8000 (ud.02 = 5 or 11)
- etc. (see chapter 5.1, reference values dependent on the speed range)

7.2.9 Brief description analog outputs

The KEB COMBIVERT has three programmable outputs (ANOUT1, 2 and ANOUT3, 4). Parameters An.31/36 allow the selection of one size which is given out at the outputs X2A.5 / 6. ANOUT 3 and ANOUT 4 (An.41 / 47) may be output as switching condition 42, or 43 with the digital outputsas PWM signal. The analog signals can be adapted to the requirements with the characteristic amplifier (An.33...35 / An.38...40 / 43...45/ 49...51).The ru-parameters show the current size before and after the amplification. The period time for the PWM-signal can be adjusted with An.46 / 52.

Figure 7.2.9 Principle of the analog inputs

An.31/36/41/47		
Absolute actual value	0	ru.7
Absolute reference	1	ru.1
Actual value	2	± ru.7
Setpoint value	3	± ru.1
Output voltage	4	ru.20
DC-link voltage	5	ru.18
Apparent current	6	ru.15
Active current	7	ru.17
Digital setting via An.32/37/42/48	8	An.xx
External PID output	9	± ru.52
Absolute ext. PID output	10	ru.52
Absoluter active current	11	ru.17
Power stage temperature	12	ru.38
Motor temperature	13	ru.46
Actual torque	14	± ru.12
Absolute actual torque	15	ru.12
Set torque	16	± ru.11
Absolute set torque	17	ru.11
Control difference / speed control	18	-
Speed reference variable	19	± ru.2
Abs. speed reference variable	20	ru. 2
Angular deviation	21	ru.58
AN1 before amplification	22	ru.27
AN1 after amplification	23	ru.28
AN2 before amplification	24	ru.29
AN2 after amplification	25	ru.30
Active power	26	ru.81
Actual position	27	ru.54
Set position	28	ru.56
Max. torque in %	29	ru.90

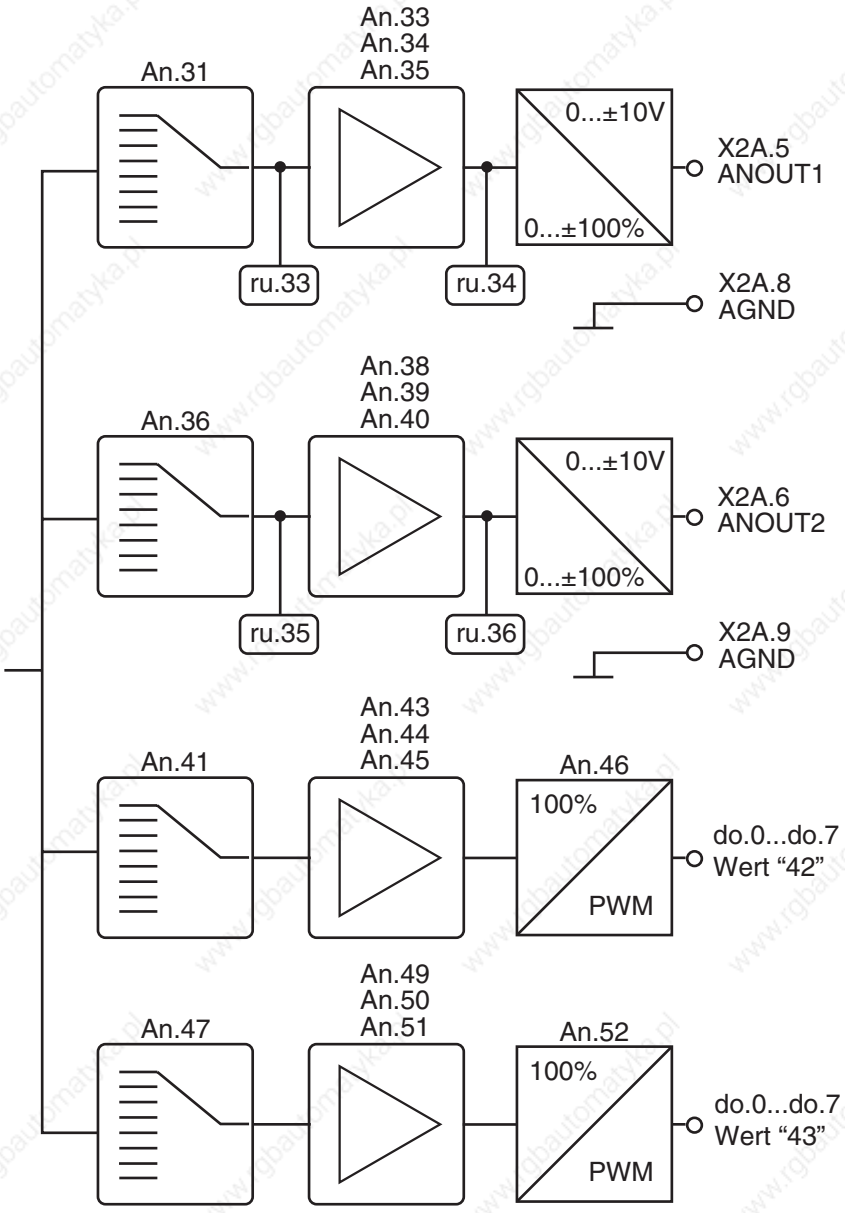

The reference values formode 0-3 and 18-20 change dependent on ud.02.

7.2.10 Output signals

ANOUT 1 / 2, bipolar

A voltage of 0...±11,5 VDC represents the selected size in the range of 0...±115 % with a resolution of 10 Bit at the output. In order to be able to balance load-dependent voltage drops, the limitation at the output of the characteristic amplifiers is ±115 %.

Fig. 7.2.10 Analog output

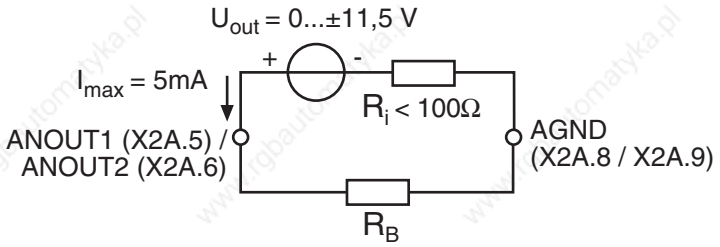

ANOUT 3 / 4, PWM output

Process variables, that change only slowly, as for example the power module temperature, can be output over two virtual analog outputs (ANOUT3 and 4). This is realised through generation of a PWM-signal (pulse-width-modulation) on a digital output. Period T can be adjusted with parameter An.46 or An.52 „ANOUT period“ of 1...240 s.

Fig. 7.2.10.a PWM output signal

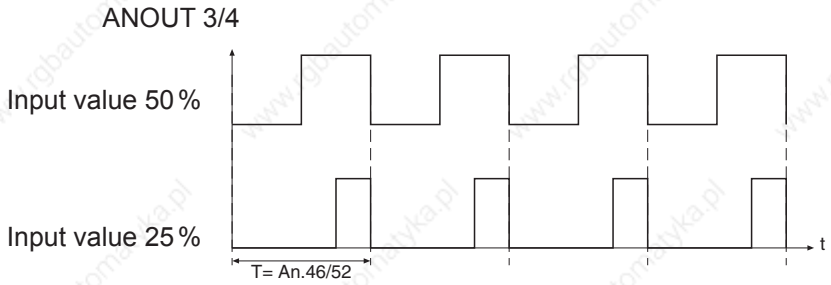

7.2.11 Analog output / display (ru.33...34 / ru.35...36)

Following parameters are used for the indication of the analog outputs, before and after the characteristic amplification:

ru.33 ANOUT1 / pre amplification display	0...±400 %
ru.34 ANOUT1 / post amplification display	0...±115 %
ru.35 ANOUT2 / pre amplification display	0...±400 %
ru.36 ANOUT2 / post amplification display	0...±115 %

At the outputs ANOUT3 and 4 there is no display provided.

7.2.12ANOUT 1/ -2/-3/-4/ function (An.31 / An.36 / An.41, An.47)

These parameters define the function which controls the respective output. Following adjustments are possible:

An.31/ An.36/ An.41/ An.47				
Value	**Function**	**Output of**		**100 % corresponds**
0	Absolute actual value ru.07	Amount of the actual speed value		3000 rpm [2]
1	Absolute set value ru.01	Amount of the speed set value before ramp generator		
2	Actual value ru.07	Actual speed value		
3	Set value ru.01	Speed setpoint		
4	Output voltage ru.20	Output voltage		0...500 V
5	DC voltage ru.18	DC-link voltage		0...1000 V
6	Apparent current ru.15	Apparent current		0...2 x inverter rated current (In.01)
7	Active current ru.17	Active current		
8	Digital setting by An.32/ 37/ 42/ 48	by An.32/ 37/ 42/ 48 preset value		0...100 %
9	External PID output ru.52	Base value of the PID controller		
10	Absolute ext. PID output ru.52	Amount of the PID controller base value		
11	Absolute active current ru.17	Amount of the active current		0...2 x inverter rated current (In.01)
12	Heat sink temperature ru.38	Power module temperature		0...100 °C
13	Motor temperature ru.46	Motor temperature		
14	Actual torque (F5-M/S)	Actual torque		0...3 x rated torque DASM: dr.14 DSM: dr.27
15	Absolute actual torque (F5-M/S)	Amount actual torque	only for closed -loop control operation	
16	Set torque (F5-M/S)	Set torque		
17	Absolute set torque (F5-M/S)	Amount set torque		
18	System deviation of the speed controller	System deviation of the speed controller		0...3000 rpm [2]
19	Speed reference variable ru.02	Speed set value after ramp generator		
20	Absolute speed reference variable ru.02	Angular deviation		
21	Angle difference (ru.58)	Angular deviation		0... Display increments for a revolution
22	Analog input 1 before amplification (ru.27)	Value of AN.01 at the terminal		0...100 %
23	Analog input 1 after amplification (ru.28)	Value of AN.01 after analog value processing		
24	Analog input 2 before amplification (ru.29)	Value of AN.02 at the terminal		
25	Analog input 2 after amplification (ru.30)	Value of AN.02 after analog value processing		
26	Active power (ru.81)	Active power		0...2 x rated motor power DASM: dr.03 DSM: dr.32
27	Actual position (ru.54)	Actual position		Ref. position 0 % (PS.41) Ref. position 100 % (PS.42)
28	Set position (ru.56)	Set position		
29	Max. torque in % (ru.90)	actual torque, referring to the max. permissible torque of the drive chain		0...100 %

[1] dependent on inverter rated current (In.1), [2] dependent on ud.2, [3] dependent on the motor

7.2.13 Gain of Output Characteristic (An.33...35 / An.38...40 / An.43...45 / An.49...51)

The characteristic amplifier are following after selecting the signal to be given out (see fig. 7.2.9). With these parameters the input signals can be adapted in X and Y direction as well as in the rise to the requirements. With factory setting no zero point offset is adjusted, the gain is 1, i.e. 100% of the variable to be given out correspond to 10V at the analog output (see fig. 7.2.14.a).

Function	ANOUT1	-2	-3	-4	Value range	Resolution	Default
Amplification	An.33	An.38	An.43	An.49	±20,00	0,01	1,00
X offset	An.34	An.39	An.44	An.50	±100,0%	0,1%	0,0%
Y offset	An.35	An.40	An.45	An.51	±100,0%	0,1%	0,0%

Fig. 7.2.13.a Factory setting: no Offset, Gain 1

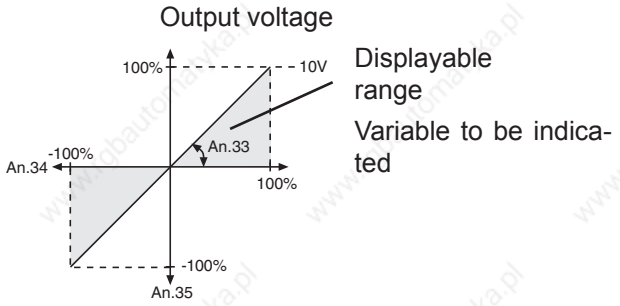

Inverting the analog output

An example for using the characteristic amplifier is shown in Fig. 7.2.14.b:

1. Adjustment of the X-Offset (An.34) to 100 (%)
2. Adjustment of the amplification (An.33) to -1.00

Figure 7.2.13.b Inverse of the analog output

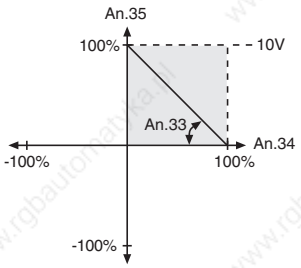

These settings result in an inverting of the analog signal.

0% corresponds to 10V at the output
100% corresponds to 0 V at the output

Analog output as switch

An example for using the analog output as 0/10V-switch is shown in fig. 7.2.13.c:

1. Adjustment of the amplification (An.33) to 20.00
2. Adjustment of the X-Offset (An.34) to the desired switching level

Figure 7.2.13.c Analog output as a switch

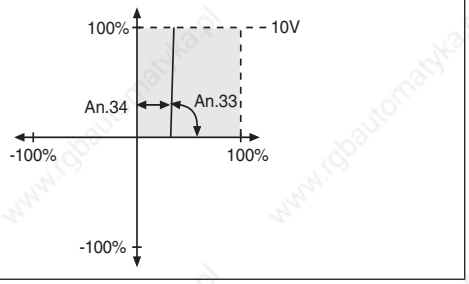

Because of the high amplification the analog output switches in a relative small switching window.

Computation of the amplification

Since the analog output always works firmly onto the values defined under 7.2.12, one can adjust the characteristic with the aid of the amplification so that the complete range 0...±10V is utilized.

$$\frac{\text{defined value}}{\text{desired value}} = \text{amplification (An.33/ 38/ 43/ 49)}$$

Example Output frequency (it is not valid for F5-M):

$$\frac{100\text{Hz}}{68\text{Hz}} = 1.47$$

7.2.14ANOUT 1...4 digitale setting (An.32 / 37 / 42 / 48)

Analog values can be preset in percent for the respective input with parameters An.32/ An.37/ An.42/ An.48. For that purpose the value8: „digital setting“ must be adjusted. The setting is done within the range ±100 %.

1. Introduction	7.1 Operating and appliance data
2. Summary	7.2 Analog in- and outputs I
3. Hardware	7.3 Digital in- and outputs
4. Operation	7.4 Setpoint-, rotation- and ramp adjustment
5. Selection of Operating Mode	7.5 Motor data and controller adjustments of the asynchronous motor
6. Initial Start-up	7.6 Motor data and controller adjustments of the synchronous motor
7. Functions	7.7 Speed control
8. Error Assistance	7.8 Torque display and -limiting
9. Project Design	7.9 Torque control
10. Networks	7.10 Current control, -limiting and switching frequencies
11. Parameter Overview	7.11 Speed measurement
12. Annex	7.12 Positioning and synchronous control
	7.13 Protective functions
	7.14 Parameter sets
	7.15 Special functions
	7.16 CP-Parameter definition

7

7.3.1	Summary description digital inputs	7.3 - 3
7.3.2	Input signals PNP / NPN selection (di.00)	7.3 - 4
7.3.3	Setting of digital inputs by software (di.01, di.02)	7.3 - 5
7.3.4	Input terminal state (ru.21), internal input state (ru.22)	7.3 - 6
7.3.5	Digital noise filter (di.03), fast dig. noise filter (di.23)	7.3 - 6
7.3.6	Input logic (di.04)	7.3 - 6
7.3.7	Input trigger (di.05)	7.3 - 6
7.3.8	Strobe-dependent inputs (di.06, di.07, di.08)	7.3 - 7
7.3.10	Error reset / input selection and edge evaluation (di.09 / di.10)	7.3 - 8
7.3.11	Assignment of the inputs	7.3 - 9
7.3.12	Software ST and locking of the control release	7.3 - 12
7.3.13	Deactivation of the digital control release	7.3 - 12
7.3.14	Summary description digital outputs	7.3 - 13
7.3.15	Output signals / hardware	7.3 - 14
7.3.16	Output filter (do.43, do.44)	7.3 - 14
7.3.17	Switching conditions (do.00...do.07)	7.3 - 15
7.3.18	Inverting of switching conditions for flags 0...7 (do.08...do.15)	7.3 - 20
7.3.19	Selection of switching conditions for flags 0...7 (do.16...do.23)	7.3 - 20
7.3.20	Linking the switching conditions for flags (do.24)	7.3 - 21
7.3.21	Inverting of flags (do.25...do.32)	7.3 - 21
7.3.22	Selection of flags (do.33...do.40)	7.3 - 22
7.3.23	Linking the flags(do.41)	7.3 - 22
7.3.24	Output terminal state (ru.25) and digital output state (ru.80)	7.3 - 23
7.3.25	Hardware output allocation (do.51)	7.3 - 23
7.3.26	Programming example	7.3 - 24

7.3 Digital in- and outputs

7.3.1 Summary description digital inputs

The KEB COMBIVERT has 8 external digital inputs and 4 internal inputs (IA...ID). All inputs can be assigned to one or several functions.
Coming from the terminal strip it can be defined with parameter di.00, whether external inputs shall be controlled in PNP or NPN (not at safety relais) wiring. Parameter ru.21 shows the currently controlled input. Each input can optionally (di.01) be set via terminal strip or by means of software with di.02. A digital filter (di. 03, di.23) reduces the interference susceptibility of the inputs. The inputs can be inverted with di.04 and with di.05 one can switch to edge-triggering. With the parameters di. 06...di. 08 a Strobe-mode can be activated. The input status (ru.22) shows the inputs that are actually set for processing. The function(s), that a programmed input carries out, is defined by means of the input selection of the corresponding function or by di.11...22.

For safety reasons the control release (ST) must generally be switched by means of hardware. Edge-triggering, inversion and strobe signal can be adjusted but have no influence.

Figure 7.3.1 Principle of the digital inputs

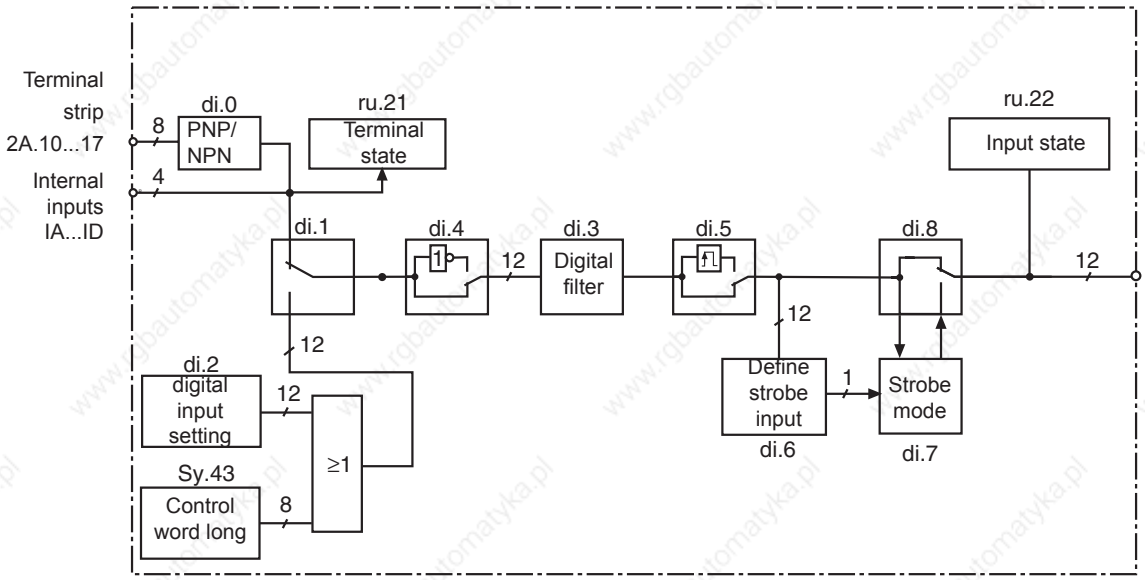

7.3.2 Input signals PNP / NPN selection (di.00)

Figure 7.3.2.a Digital inputs in PNP control (di.00 = 0)

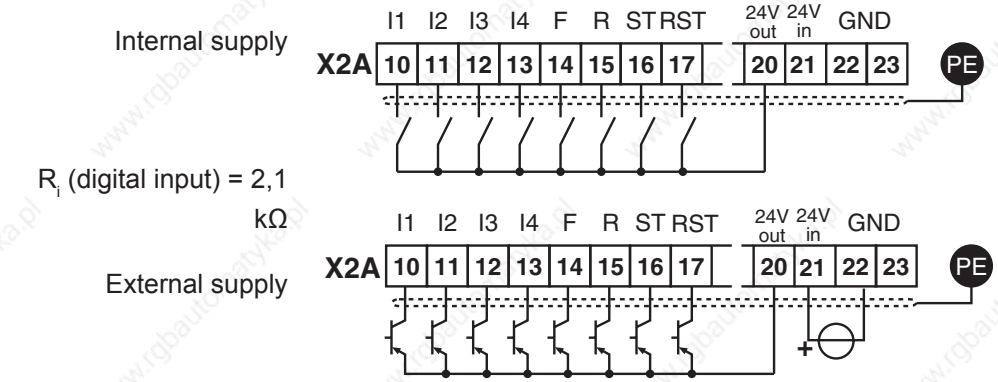

Switching voltage for digital inputs = 13...30V DC ±0% smoothed

Figure 7.3.2.b Digital inputs in NPN control (di.00 = 1)

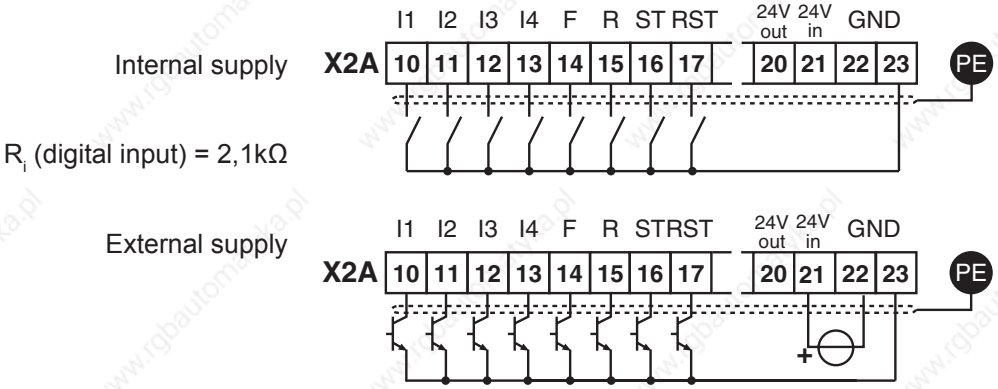

7.3.3 Setting of digital inputs by software (di.01, di.02)

With the aid of parameter di.01 and di.02 the digital input can be set without external wiring.

The control release must generally be switched by means of hardware even if one switches by software (see Fig. 7.3.3 AND-operation with di.02 and sy.50)!

Figure 7.3.3 Digital inputs controlled by software (di.01/di.02)

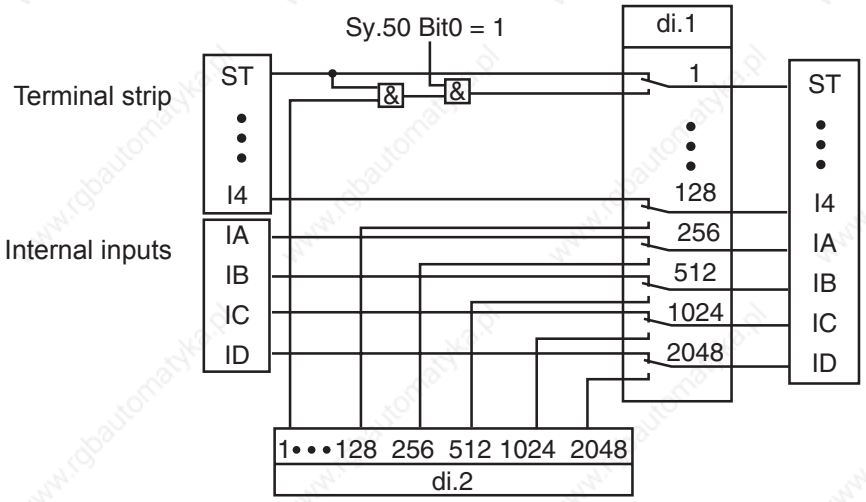

As shown in Fig. 7.3.3, it can be selected with di.01, whether the inputs shall be switched from the terminal strip (default) or by way of parameter di.02. Both parameters are bit-coded, i.e. according to following table, the appropriate value for the input is to be entered. In the case of several inputs the sum is to be formed. (Exception: Control release must always be bridged at the terminal strip).

7

Table terminal status

Bit	Decimal value	Input	Terminal
0	1	ST (prog. input "control release/reset")	X2A.16
1	2	RST (prog. input "reset")	X2A.17
2	4	F (prog. input "forward")	X2A.14
3	8	R (prog. input "reverse")	X2A.15
4	16	I1 (prog. input 1)	X2A.10
5	32	I2 (prog. input 2)	X2A.11
6	64	I3 (prog. input 3)	X2A.12
7	128	I4 (prog. input 4)	X2A.13
8	256	IA (internal input A)	no
9	512	IB (internal input B)	no
10	1024	IC (internal input C)	no
11	2048	ID (internal input D)	no

Example: ST, F and IB are controlled, indicated value = 1+4+512 = 517

7.3.4 Input terminal state (ru.21), internal input state (ru.22)

The input terminal state (ru.21) displays the logical level of the input terminals. It is unimportant, whether the inputs are internally active or not. If a terminal is controlled, then the appropriate decimal value according to the table below is output. If several terminals are active, then the sum of the decimal values is output.
The internal input state (ru.22) shows the logic condition of the digital inputs which are internally set for processing. If an input is set, the appropriate decimal value according to the table under 7.3.1 is output. If several inputs are set, then the sum of the decimal values is output.

7.3.5 Digital noise filter (di.03), fast dig. noise filter (di.23)

The digital filter reduces the susceptibility to interferences on the digital inputs. Only hardware inputs can be filtered. Each input port has a separate filter counter, counting upward for active ports and downward for inactive ports. The output of the filter is set when the filter time is reached and is reset at zero.

Parameter	Setting range	Resolution
di. 03	0...127 ms	1 ms
di. 23	0...31,75 ms	0,25 ms

Priority of filter times: The greater of the two times is used.

7.3.6 Input logic (di.04)

With parameter di.04 it can be adjusted, whether a signal is 1- or 0-active (inverted). The parameter is bit-coded, i.e. the value belonging to this input must be entered. If several inputs shall be inverted, then the sum is to be formed. (Exception: An inversion of the control release remains without function.)

7.3.7 Input trigger (di.05)

As a standard the inverter is controlled with static signals, i.e. an input is set for as long as a signal is applied. However, practice has shown that a signal may be available for a limited time only, but the input shall still remain set. In that case the input or several inputs can be adjusted to edge-triggered flip-flop. Then a rising edge with a pulse duration that is longer than the response time of the digital filter is sufficient for switch-on. Switch-off is effected with the next rising edge.

Control release (ST) can be set to edge-triggered flip-flop, but remains without affect on the function, since it is a pure static signal.

Figure 7.3.7 Example of a signal flow diagram for input I1 (di.05=16)

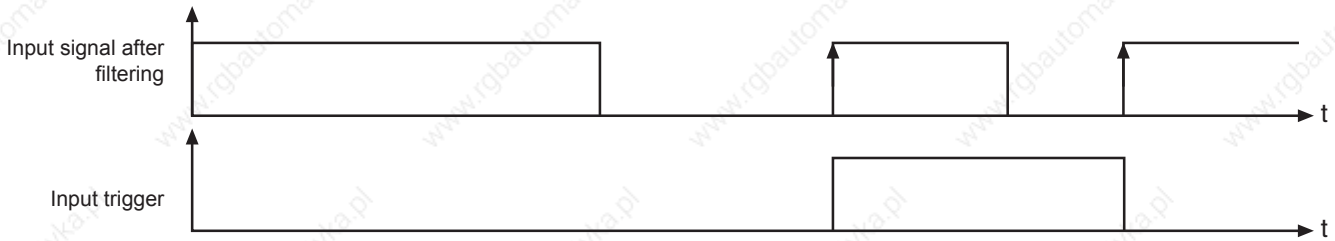

7.3.8 Strobe-dependent inputs (di.06, di.07, di.08)

A Strobe signal is used mainly for triggering the input signals. For example, two inputs shall be used for the parameter set selection. But the signals for the control do not arrive exactly even, so for a short time it would be switched into an unintended set. With active strobe (scanning signal) the current input signals of the strobe-dependent inputs are accepted and kept until the next scanning.
Which inputs are switched by strobe?

With di.08 any input can be selected as strobe-dependent input. With the control release di.08 has no function since this is a static input.

From where comes the strobe signal?

With parameter di.06 the strobe input is set. If several inputs are adjusted as strobe they are linked in OR-operation.

Edge-active or static strobe?

As a standard the strobe is edge-active, i.e. the input conditions on the strobe input are accepted with rising edge and maintained until the next increase edge. For some applications it is sensible to use the strobe in a manner of a gate function. In that case the strobe signal is static, i.e. the input signals are accepted for as long as the strobe signal is set (or for as long as the gate is open).

di.07 Strobe mode

di.07: Strobe mode		
Value	**Function**	**Description**
0	Edge-active strobe (default)	Input states are stored at the rising edge of the strobe input and are held until the next rising edge.
1	Static strobe - froze if strobe is not active	Input states are updated as long as the strobe signal is set. When the signal becomes inactive, the state is held.
2	Static strobe - only active at active strobe	Input states are updated as long as the strobe signal is set. When the signal becomes inactive, the state is reset.

Figure 7.3.8.a Edge active strobe (di.07 = 0)

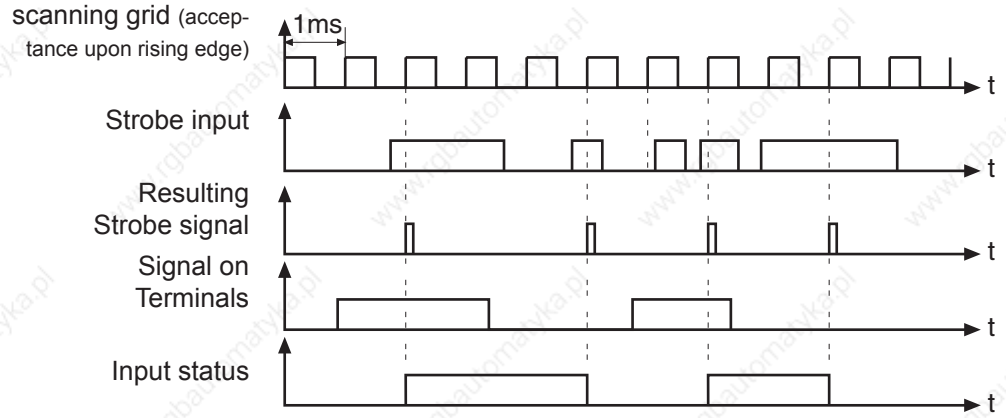

Figure 7.3.8.b Static strobe mode 1 (di.07 = 1)

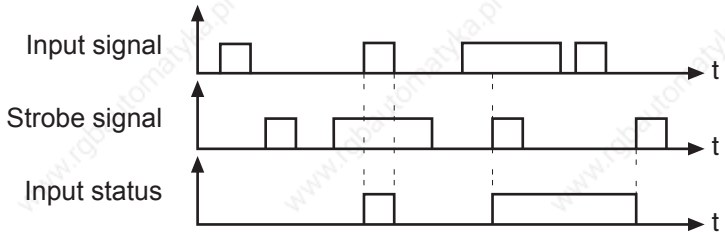

Figure 6.3.8.c Static strobe mode 2 (di.07 = 2)

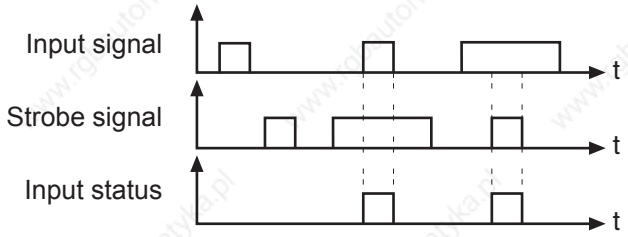

7.3.10 Error reset / input selection and edge evaluation (di.09 / di.10)

With di.09 the reset input is defined according to the table under 7.3.1. If the reset input shall react to an edge, one or several of the reset inputs defined with di.09 can be switched to edge evaluation with di.10.

7.3.11 Assignment of the inputs

There are two strictly different procedures for the assignment of inputs.

a.) Each function can be associated with one or more inputs. I.e., for each function (positioning, constant selection, etc.) an input can be selected that activates this function.

b.) Each digital input can be associated with one or more functions. I.e.,each digital input can be associated with one or more functions for the parameters di.11...di.22 "function" and di.24...di.35 "+ function". For the parameters di.11...di.22 each input can be associated with multiple functions, for the parameters di.24...di.35 only one function can be selected.

Both variants mutually influence each other; i.e., if an input is associated with a function, the parameters di.11... di.22 and di.24...di.35 are adjusted accordingly .

Because of the two variants, the control combines two advantages:

- with the functional programming of the inputs, the function's parametrization also permits selecting which inputs will activate the function,
- with the input-oriented display one gets a complete overview of the functionality of an input and can check whether there are any unwanted interactions between functions.

The following table shows a list of the parameters with which the various functions can be assigned digital inputs:

An.03	AN1 save trigger input selection
An.13	AN2 save trigger input selection
An.23	AN3 save trigger input selection
cn. 11	PID reset input selection
cn. 12	I reset input selection
cn. 13	Fade in reset input selection
di. 09	Reset input selection
di. 36	Software ST input selection
di. 37	ST lock input selection
di. 39	Disable dig. ST input selection
dr.61	Rs corr. auto temp input selection
Ec.48	Scan channel 2 input selection
Ec.49	Scan channel 1+ 2 input selection
Fr.07	Parameter set input selection
Fr.11	Reset set input selection
LE.17	Timer 1 start input selection
LE.19	Timer 1 reset input selection
LE.22	Timer 2 start input selection
LE.24	Timer 2 reset input selection
oP.19	Step value input selection 1
oP.20	Step value input selection 2
oP.56	Motor poti increase input selection
oP.57	Motor poti decrease input selection
oP.58	Motor poti reset input selection
oP.60	Direction forward input selection
oP.61	Direction reverse input selection
Pn.04	Ext. fault input selection
Pn.23	LAD stop input selection
Pn.29	DC brake input selection
Pn.64	Set GTR7 input selection
PS.02	Pos/syn input selection
PS.03	Shift. slave input selection
PS.10	Shift. slave inv. input selection
PS.18	Reference switch input selection
PS.19	Start reference input selection
PS.29	Start posi input selection
PS.36	Teach input selection
PS.37	Pos. scan index input selection
PS.38	Relative pos. f/r input selection
PS.43	Corr. reference point input selection
uF.08	Energy saving input selection
uF.21	Dt.comp. off input selection

The following table shows an overview of all functions that can be assigned to a digital input with the parameters di.11...di.22 (multiple functions can be used).

di.11...di.22 Input function			
Bit	Value	Explanation	Func. para [1]
0	1: Fixed frequency 1	Select fixed values	oP.19
1	2: Fixed value 2		oP.20
2	4: Increase motor potentiometer	Motor potentiometer	oP.56
3	8: Decrease motor potentiometer		oP.57
4	16: Reset motor potentiometer		oP.58
5	32: forward	Rotation setting	oP.60
6	64: reverse		oP.61
7	128: Reset error	Release reset	di. 09
8	256: Ramp stop	Stop ramp	Pn.23
9	512: DC braking	Activate DC braking	Pn.29
10	1024: Energy saving function	Flux reduction	uF.08
11	2048: set	Parameter set selection	Fr.07
12	4096: Reset to set 0		Fr.11
13	8192: external fault	Release error state at inverter	Pn.04
14	16384: Store AN1	Activate save mode for analog inputs	An.03
15	32768: Store AN2		An.13
16	65536: Store AN3		An.23
17	131072: Start timer 1	Start / stop timer	LE.17
18	262144: Reset timer 1		LE.19
19	524288: Start timer 2		LE.22
20	1048576: Reset timer 2		LE.24
21	2097152: Reset PID controller	PID controller	cn. 11
22	4194304: Reset PID (I part)		cn. 12
23	8388608: Reset PID overlay		cn. 13
24	16777216: Posi/synchronous activation	Activate posi / sync module	PS.02
25	33554432: Slave adjustment	Adjustment of the master position (Addition of adjustment value)	PS.03
26	67108864: Reference switch	Connection of the reference point switch	PS.18
27	134217728: Approach the reference point	Start approach to reference point	PS.19
28	268435456: Control GTR7	GTR7 permanent to	Pn.64
29	536870912: Start Posi	Start positioning	PS.29
30	1073741824: Slave adjustment inverted	Adjustment of the master position (Subtraction of adjustment value)	PS.10
31	2147483648: I + function	an auxilliary function ("+" function) is selected	---

[1] column "Func. Param." shows the function-specific parameter corresponding to the value in di.11...di.22.

The following table shows an overview of the functions that can additionally be assigned to a digital input with the parameters di.24.. di.35 (only one auxilliary function per input allowed / Bit 31 "I+ Function" must be active for the input in question):

di.24...di.35 Input "+" function		
Value	Explanation	Func. Para[1)]
0: Reset master slave difference	Master position (ru.56) is overwritten with slave position (ru.54)	PS.11
1: Set reference point	Current position (ru.54) is overwritten with reference position (PS.17)	PS.13
2: Store position (teach)	current position (ru.54) is adopted as target position in PS.24	PS.36
3: Scan position	in the state "positioning active", the current position is stored in ru.71 "Teach/ Scan Position Display" at a positive edge	PS.37
4: Relative position F/R	Rotation setting for relative positioning (only if for the positioning target the mode "relative to PS.38" is selected in PS.27)	PS.38
5: Software ST (not at di.35)	any digital input receives the function "control release" (software emulation / function cannot be connected to input ST)	di. 36
6: ST locking (not at di.35)	Setting the input leads to locking of the software control release	di. 37
7: Reference point correction	Connecting the switches for flying referencing in slip-coupled systems	PS.43
8: Break monitoring	Between the end of the break closing period (Pn.40) and the beginning of the break opening period (Pn.36) the break always has to be closed. If the input becomes (or is) active during this phase, E.br is triggered.	Pn.42
9: Dead time compensation off	While the input is active, dead time compensation is switched off	uF.21
10: UPS operation 400V class	Activating the input causes a reduction in the threshold for activation and resetting of the undervoltage error	Pn.78
11: no digital ST (di.35 no function)	Control release is set only via the terminal strip (di.01 / di.02 and control word SY.43 / SY.50 without function)	di. 39
12: Start autom. Rs temperature correction	Start of the temperature-dependent stator resistance adjustment (only in v/f-characteristic controlled operation and SMM)	dr.61
13: Encoder channel 2 / apply value	The value of Ec.32 (at 14: and Ec.31) is sampled with the rising edge and stored in Ec.50/ Ec.51	Ec.48
14: Encoder channel 1 + 2 / apply value		Ec.49
15: reserved		

[1)] column "func. param." shows the function-specific parameter corresponding to the value in di.11...di.22

7.3.12 Software ST and locking of the control release

di.36 software ST, di.37 ST lock, di.38 turn off ST delay time

The function is switched off, if no input is selected in di.36. ST can not be selected as software ST or input for locking.
With the locking function the control release can be controlled in case of voltage failure (even if the controlled PLC is failure) as long as e.g. Power off function needs for stopping the drive.
Condition: terminal ST must be bridged !
Switching off an input (selection in di.36) is decelerated for the time adjusted in di.38. Within this time the locking input (selection into di.37) must be active in order to secure the function.
A software input e.g. (IA-ID) can be assigned with the function Power off (do.00...do.07 = 17, switching condition for OA-OD) as locking input.

Figure 7.3.11c Software ST, locking of the control release

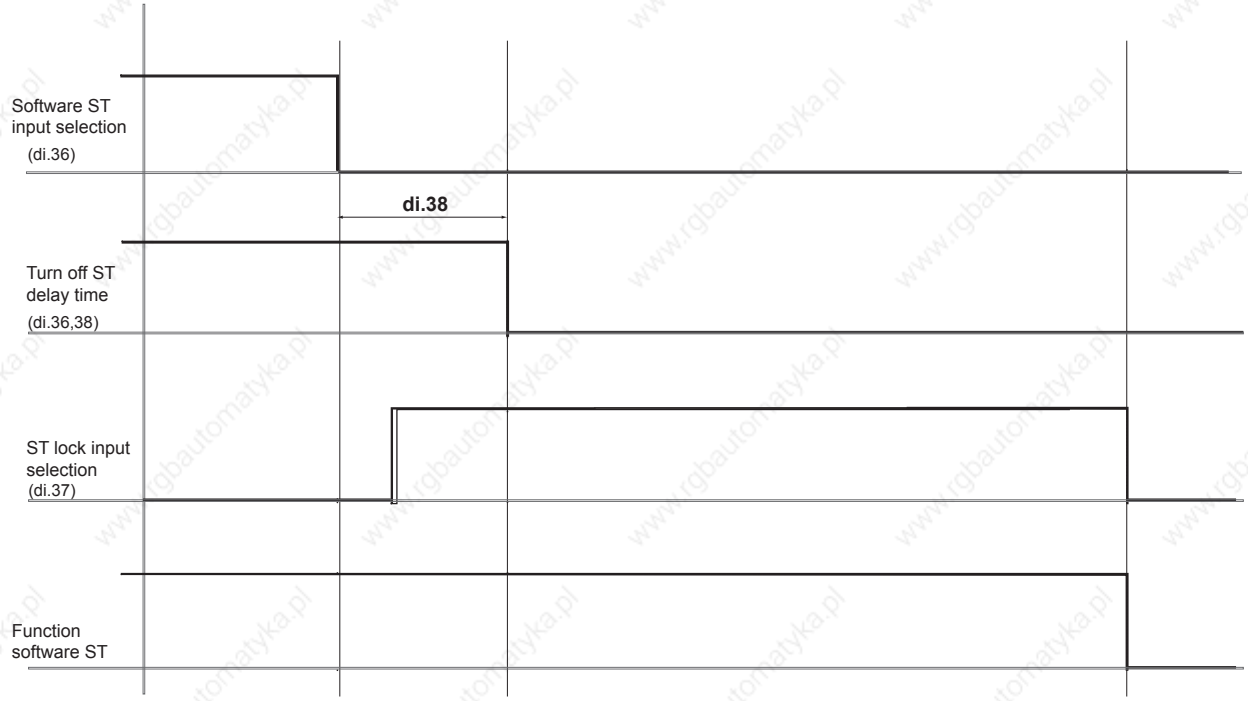

7.3.13 Deactivation of the digital control release

With the digital input selection (di.01 / di.02) or the control word (SY.43/ SY.50) the control release can be triggered digitally (e.g., via a bus system). Additionally, terminal ST must always be active.
In parameter di.39, "turn off ST input selection", an input can be selected for deactivating the digital setting of the control release . Thus, only terminal ST is active.

That way, it is possible to implement manual operation in case of bus system failure.

7.3.14 Summary description digital outputs

Figure 7.3.12 Principle of the digital outputs

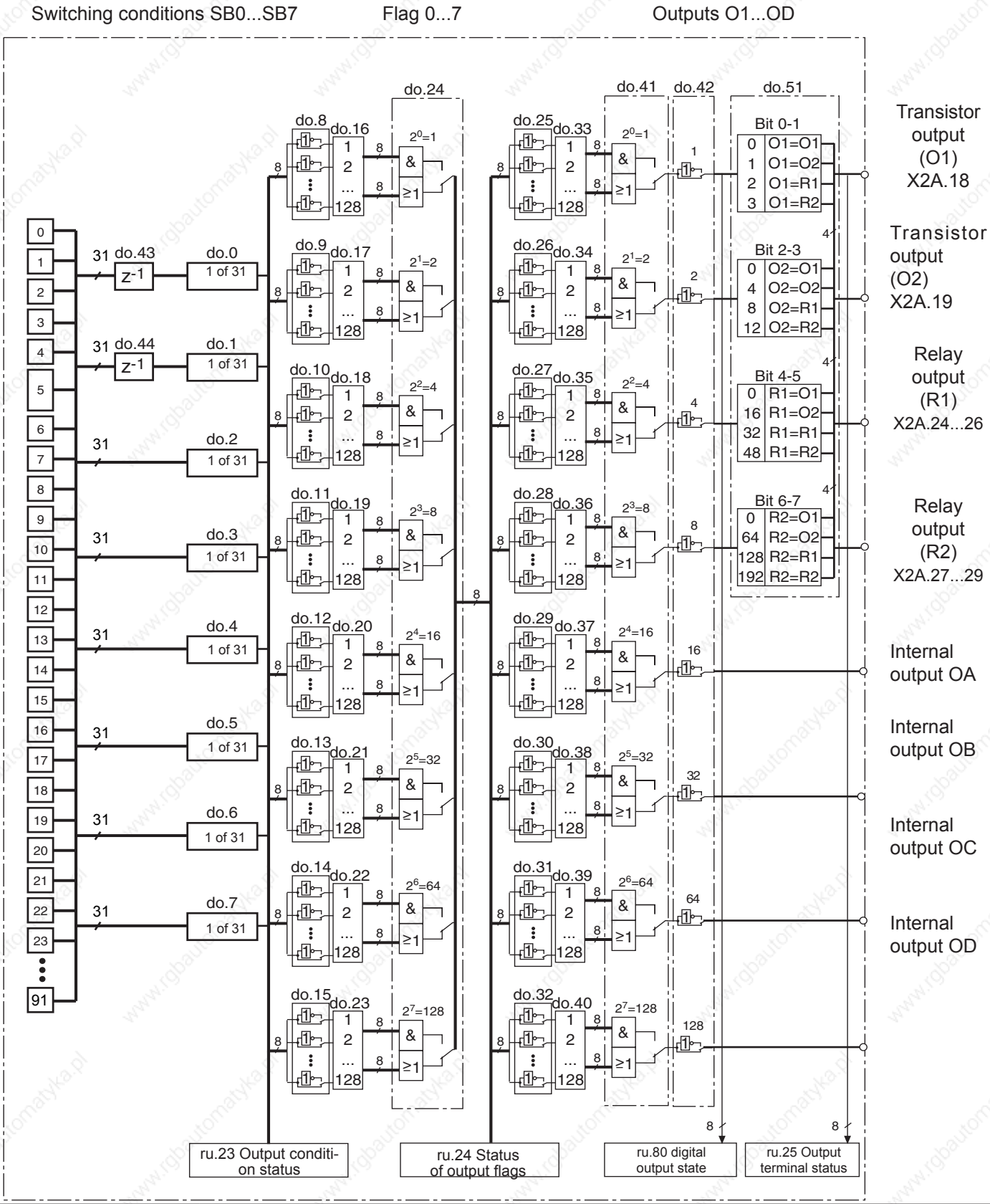

Description

For the switching of the digital outputs one can choose up to 8 conditions from the 91 different conditions. These are entered in do.00...do.07. Switching condition 0 and 1 can be filtered by do.43 and do.44. Parameter ru.23 shows, if one or several of these conditions are met.For each flag it can now be selected which of the 8 conditions shall apply to it (do.16...do.23). Each condition can still be inverted before selection (do.08...do.15). As a standard, all conditions (if several are selected) are OR-operated. With do.24 this can be changed to AND-operation, i.e. all conditions selected for this flag must be fulfilled before it is set. Parameter ru.24 shows the flags which are set in this stage. do.33...40 form a second logic step with which a selection of the flags from logic step 1 can be made. Every individual condition can be inverted with do..25...32. do.41 adjusts the manner of the linkage (AND/OR). Parameter do.42 is used for inverting one or several outputs. With do.51 the output signals are assigned to the terminals. ru.80 serves for the display of the status prior to allocation, thereafter ru.25. The internal outputs OA...OD are directly connected with the internal inputs IA...ID.

7.3.15 Output signals / hardware

Figure 7.3.13a 'Transistor output

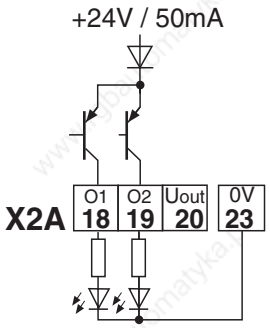

Figure 7.3.13b Relay output

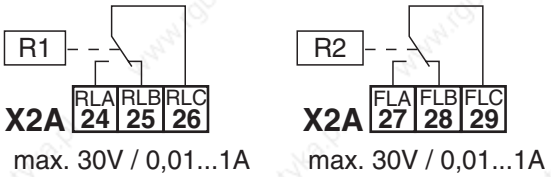

The total current of X2A.18, 19 is limited to 50mA. In case of inductive load at the relay outputs or at the transistor output a protective wiring is to be provided (free-wheeling diode)!

7.3.16 Output filter (do.43, do.44)

With do.43 a filter can be set for switching condition 0. With do.44 for switching condition 1. The change of a switching condition must be applied for the filter time, then it becomes active at the output of the filter. If the change of a switching condition is cancelled during the filter time, the filter time is reset and restarted at the next change. The filter time can be adjusted in a range of 0 (off)...1000 ms.

7.3.17 Switching conditions (do.00...do.07)

From the following switching conditions one can select up to 8 for further processing. The values are then entered in the parameters do.00...do.07.

do.00...do.07: Switching conditions		
Value	Function	Description
0	Always switched-off	Switching condition never met
1	Always active	Switching condition always met
2	Run signal;	Drive is running and there is no malfunction (also set when modulation is generally enabled but is temporarily disabled due to, e.g., "motor de-excitation").
3	Ready for operation	Drive is ready for operation (inverter state unequal error).
4	Error	There is an error message (inverter state equals the error).
5	Error without auto-reset	Is not set for errors for which automatic restart is programmed.
7	Pre-warning overload	ru.39 is an overload counter, counting in steps of 1%. On reaching 100 % the inverter switches off. Upon exceeding the level of Pn.09 (default 80%) the overload warning is given. The performance in case of a warning can be adjusted with Pn.08 (response to OL-warning).
8	Pre-warning power module overheating	Overheating-prewarning (OH)! Depending on the power circuit the inverter switches off between 60...95°C heat sink temperature. The prewarning is output, when the level OH-warning (Pn.11) is reached (default 70°C). The behaviour in case of a warning can be adjusted with Pn.10 (response to OH-warning).
9	Pre-warning motor overheating	PTC-prewarning (dOH), on tripping of the motor-PTC connected to the terminals T1/T2. After expiration of an adjustable switch-off time Pn.13 (0...120s) the inverter switches off. The behaviour in case of a warning can be adjusted with Pn.12 (response to dOH-warning).
10	Motor protection relay function	**F5-M and F5-H (asynchronous motors):** The motor protection trigger time according to VDE has expired. The reaction to the triggering of the electronic motor protection relay can be adjusted with Pn.14 (motor protection reaction). **F5-S and F5-E (synchronous motors):** The overload counter of the motor protection function for servo motors has exceeded the value of Pn.15 "motor protection function level". When the counter reaches 100%, the error is triggered. The response to this prewarning can be adjusted with Pn.14 (response to motor protective function).
11	Warning internal overheating	Interior temperature-prewarning (OHI) is output, when the interior temperature of the inverter exceeds the level OHI-warning. The behaviour in case of an error can be adjusted with Pn.16 (response to OHI-warning). An error is generally released after expiration of the OHI-deceleration time (Pn.17). Not at Pn.16 = 7
12	Cable breakage 4...20mA AN1	Cable breakage for 4...20mA setpoint setting at An.01 or An.02. Triggering when set point current falls below 2mA.
13	Cable breakage 4...20mA AN2	
14	Current limit (I > Pn.20)	Pn.20 "current limit level" exceeded (only for v/f characteristic-controlled operation).
15	Load acceleration stop active	Ramp is stopped (LA-/LD-stop active). Pn.24 "ramp stop current. level" or Pn.25 "ramp stop intermediate circuit voltage level" exceeded during acceleration/deceleration.

further on next side

do.00...do.07: Switching conditions		
Value	Function	Description
16	DC-braking active	DC-voltage breaking active
17	Power off function	The inverter state is "power off function active".
18	Brake control	The output is used for brake control. The output is active if the brake is to be ventilated.
19	System deviation > level	ru.02 "ramp output display" – ru.07 "actual value display" > switching level
20	Speed dependent	Is set if parameter ru.07 "actual value display" falls into a window of +/- LE.16 "freq./speed hysteresis" around ru.01 "set value display". Not set when the state is "no control release" or "idle". If the ramp generator is deactivated by a different function (e.g., positioning, speed search, DC braking, etc.), the state of the switching condition is undefined.
21	Acceleration	Ramp generator is in the phase acceleration, clockwise rotation, acceleration, counter clockwise rotation, or acceleration stop.
22	Deceleration	Ramp generator is in the phase deceleration, clockwise rotation, deceleration, counter clockwise rotation, or deceleration stop.
23	Real direction of rotation = set direction of rotation	The rotation directions at the input and output of the ramp generator are equal (the sign of ru.02 "ramp output display) is identical with the sign of ru.01 "set value display").
24	Utilization > level	Utilization (ru.13) > level
25	Abs. active current > level	Abs. active current (ru.17) > switching level
26	DC link voltage > level	DC-link voltage (ru.18) > level
27	Actual value > level	Abs. actual value (ru.07) > switching level
28	Set value > level	Abs. set value (ru.01) > switching level (applies only if the ramp generator is active)
29	Approach to reference point finished	Approach to reference point executed and completed (position valid/ software limit switch useable)
30	Current torque > level	Current torque > switching level (not in v/f-characteristic-controlled operation)
31	Absolute value AN1 > level	Absolute value of AN1 / AN2 / AN3 at the output of the characteristic amplifier > switching level
32	Absolute value AN2 > level	
33	Absolute value AN3 > level	
34	AN1 > level	AN1 / AN2 / AN3 at the output of the characteristic amplifier > switching level (with sign evaluation)
35	AN2 > level	
36	AN3 > level	
37	Timer 1 > level	ru.43 "timer 1 display" respectively ru.44 "timer 2 display" > switching level
38	Timer 2 > level	
39	Angle difference > level	Absolute value of ru.58 "angle difference" > switching level (only in posi- or synchro-mode / note the scaling factor of the LE-parameter for increments)
40	Hardware current limit active	Protection function "hardware current limitation" is active
41	Modulation on	set if modulation is active
42	ANOUT3 PWM	Output of the analog signal ANOUT 3 and ANOUT 4, respectively, as PWM signal. The cycle duration is set with An.46 and An.52, respectively.
43	ANOUT4 PWM	
44	Inverter state (ru.0) = level	Number of the inverter state (e.g. 18 at error! Watchdog) = switching level

further on next side

do.00...do.07: Switching conditions		
Value	Function	Description
45	Power module temperature (ru.38) > level	Power module temperature (ru.38) > switching level
46	Motor temperature (ru.46) > level	Motor temperature (ru.46) > level
47	Ramp output display (ru.2) > level	Abs. ramp output display (ru.02) > switching level
48	Apparent current (ru.15) > level	Apparent current (ru.15) > Level
49	clockwise rotation	current rotation direction clockwise rotation and counter clockwise rotation, respectively (only set if ramp generator is active.
50	counter-clockwise rotation	
51	OL2 warning	Upon exceeding the level of Pn.09 (default 80%) the overload warning OL2 is given. The performance in case of a warning can be adjusted with Pn.8 (response to OL-warning).
52	Current regulator limit reached	Current and speed controller, respectively, in the limit (not in v/f-characteristic-controlled operation).
53	Speed control at the limit	
54	Target window reached	The position profile is completed (ru.56 = ru.61) and the drive is in the range of +/- PS.30 / 2 (target window) around the target position ru.61.
55	Current position > level	ru.54 "current position" > switching level (note the scaling factor of the level: 1,00 = 100 increments).
56	Positioning active	Positioning is active, but the set position ru.56 has not yet reached the target position ru.61. The output is deactivated as soon as the calculated position profile has reached the target position (ru.56 "set position" = ru.61 "target position"), even if the drive has not reached the target window yet.
57	Position not reachable	The position is inaccessible from the current speed under the restrictions of the adjusted deceleration and S-curve times or a new "start positioning" command was sent during the deceleration ramp.
58	Profile processing active	This output switching condition is needed for the follow-up positioning. The output is set if all selected inputs coupled add up to 1. Relevant for the coupling is the internal status of the inputs (displayed in ru.22 "internal input status"). The output is set with "start positioning" and deactivated only if ru.56 "set position" has reached the target position of the last block. (in the parameter PS.26, "index/ next", of the last block, the value must be " -1: PS.28").

further on next side

<table>
<tr><th colspan="3">do.00...do.07: Switching conditions</th></tr>
<tr><td>Value</td><td>Function</td><td>Description</td></tr>
<tr><td>59</td><td>Inputs AND-connected (ru.22)</td><td rowspan="4">
<table>
<tr><td>Function</td><td>switching condition met if:</td></tr>
<tr><td>and</td><td>all selected inputs active</td></tr>
<tr><td>or</td><td>at least one selected input active</td></tr>
<tr><td>NAND</td><td>at least one selected input inactive</td></tr>
<tr><td>NOR</td><td>all selected inputs inactive</td></tr>
</table>

The selection of the inputs to be coupled is done with the switching level parameter LE.00...LE.07.

<table>
<tr><td>Input</td><td>ST</td><td>RST</td><td>F</td><td>R</td><td>I1</td><td>I2</td><td>I3</td><td>I4</td><td>IA</td><td>IB</td><td>IC</td><td>Id</td></tr>
<tr><td>Value</td><td>1</td><td>2</td><td>4</td><td>8</td><td>16</td><td>32</td><td>64</td><td>128</td><td>256</td><td>512</td><td>1024</td><td>2048</td></tr>
</table>

The sum of the inputs to be queried is entered in the switching levels. Example: If R and I1 are to be coupled for switching condition 0 F, LE.00 must be set to 4 + 8 + 16 = 28,00.</td></tr>
<tr><td>60</td><td>Inputs OR-connected (ru.22)</td></tr>
<tr><td>61</td><td>Inputs NAND-connected (ru.22)</td></tr>
<tr><td>62</td><td>Inputs NOR-connected (ru.22)</td></tr>
<tr><td>63</td><td>Absolute value ANOUT1 > switching level</td><td rowspan="2">Absolute value of ANOUT1 (absolute value of ru.34 "display ANOUT1 after amplification) or ANOUT2 (absolute value of ru.36 "display ANOUT2 after amplification) greater than the switching level</td></tr>
<tr><td>64</td><td>Absolute value ANOUT2 > switching level</td></tr>
<tr><td>65</td><td>ANOUT1 > Level</td><td rowspan="2">ANOUT1 (ru.34 "display of ANOUT1 after amplification) or ANOUT 2 (ru.36 "display of ANOUT2 after amplification) greater than the switching level</td></tr>
<tr><td>66</td><td>ANOUT2 > Level</td></tr>
<tr><td>67</td><td>traversed path > level (Posi)</td><td>path traversed since the last "start positioning" command is greater than the adjusted level. If the positioning is complete, the output is reset.</td></tr>
<tr><td>68</td><td>Position to target window > level (Posi)</td><td>The output is set, if the distance to be covered to the target is larger than the adjusted level.</td></tr>
<tr><td>69</td><td>Ext. PID system deviation > level</td><td>absolute value of the system deviation of the external PID-controller > switching level</td></tr>
<tr><td>70</td><td>Driver voltage active</td><td>For inverters with safety relays: The driver voltage for the activation of the power module is active.</td></tr>
<tr><td>71</td><td>Drive runs synchronously</td><td>synchronization period after activation of the synchronization run is completed (no display of existing angle synchronicity between slave and master)</td></tr>
<tr><td>72</td><td>Actual position index = level</td><td>ru. 60 "current position index" is equal to the switching level (scaling factor: values of 0.51...1.5 count as index 1 etc.)</td></tr>
<tr><td>73</td><td>Abs. active power > level</td><td>Abs. ru.81 "active power" > switching level</td></tr>
<tr><td>74</td><td>Active power > level</td><td>ru.81 "active power" > switching level</td></tr>
<tr><td>75</td><td>Amount act. position – scan position > level</td><td>ru.54 "actual position" – ru.71 "teach/scan position display" > switching level</td></tr>
<tr><td>76</td><td>reserved</td><td></td></tr>
<tr><td>77</td><td>Act. position = position index PS.28</td><td>ru.60 "actual position index" = PS.28 "start index new profile" and target window of this positioning reached</td></tr>
<tr><td>78</td><td>Rotary table reference invalid</td><td>During the flying referencing in a round table application, a reference signal outside of the position window of +/- PS.40 "reference point window" around the reference point has been recognised.</td></tr>
<tr><td colspan="3">further on next side</td></tr>
</table>

do.00...do.07: Switching conditions		
Value	Function	Description
79	Ignore position not reachable	The output is set if a "start positioning" command was ignored because the new target position is "inaccessible". The output is reset by a new "start positioning" command or by deactivation of the Posi mode.
80	Active current > level	ru.17 "active current" greater than the switching level (sign of ru.17 is taken into account).
81	Actual value channel 1 > level	Abs. ru.09 "encoder 1 speed" respectively ru.10 "encoder 2 speed" > switching level.
82	Actual value channel 2 > level	
83	HSP5 bus synchronised	HSP5 bus synchronised;corresponds status word bit 9 (SY.51)
84	Act. value < min. setpoint oP.06 / 07	absolute value of ru.07 "actual value display" is smaller than oP.06 "min. reference forward" in clockwise rotation or oP.07 "min. reference reverse" in counter clockwise rotation.
85	ABN. Ext. error	The input triggering "warning! external input" or "error! external input" is active (the inverter state has no effect).
86	ABN. Watchdog	The Watchdog (HSP5 Watchdog SY.09 or operator Watchdog Pn.06) has triggered (inverter state has no effect).
87	ABN. Acceleration	The acceleration has exceeded the value of parameter Pn.79 "acceleration limit of 1/s^2". Pn.80 "acceleration scan time" determines the time period used for acceleration averaging. For the calculation, the speed difference must be converted from 1/min to 1/s. *
88	ABN. Power circuit and motor	Pre-warning level for an overload protection function that monitors the motor and the inverter has been exceeded. This switching condition combines (OR-operation) the warning messages 7(OL), 8(OH), 9(dOH), 11(OHI), 10(OH2), 51(OL2) . Additionally, this switching condition has the following function: If "automatic restart E.UP" is activated in Pn.00 and a time limit for the restart function in Pn.76, "max. E.UP warning time", is set, then the switching condition is active during the warning time (i.e., the time in which an automatic restart would be executed).
89	Actual value < level x set value	ru.07 "actual value display" is smaller than switching level / 100 x ru.02 "ramp output display". This switching condition is inactive if modulation is switched off and for special functions like speed search.
90	Motor temperature for Rs corr. (dr.51) > level	The switching condition is met if the motor temperature for the RS-correction (dr.51) is greater than the switching level.
91	ABN. Encoder	If the setting "warning" is programmed in Ec.42, "encoder alarm mode", the "error! encoder" is not triggered. A warning signal can be generated via this switching condition instead.

$$* \text{ Acceleration} = \frac{\text{Speed change during scan time}}{60 \times \text{scan time (in seconds)}}$$

Switching level 0...7, **LE.00...LE.07**

These parameters define the levels of the switching conditions.
Level 0 (LE.0) applies for switching condition 0; LE.1 for switching condition 1 ... and so forth.

Switching hysteresis 0...7, **LE. 08...LE.15**

The hysteresis, in reference to the adjusted values, defines the parameters LE. 08...LE.15.
Hysteresis 0 (LE.08) applies for comparison level 0; LE.09 for comparison level 1 ... and so forth.

Frequency hysteresis LE.16

LE.16 determines the hysteresis for status constant run.

7.3.18 Inverting of switching conditions for flags 0...7 (do.08...do.15)

Figure 7.3.15 Inversion and selection of switching conditions

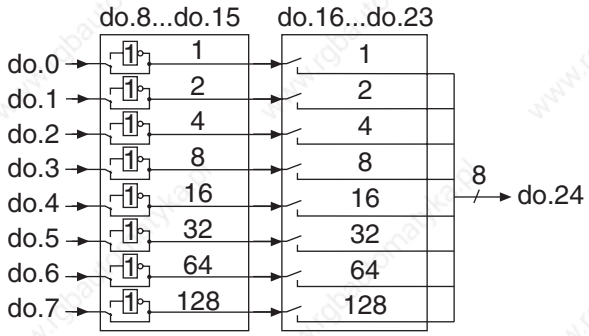

With the parameters do.08...do.15 each of the 8 switching conditions (do.00...do.07) can be inverted for each flag separately. Through this function it is possible to set any chosen switching condition as Non-condition.The parameter is bit-coded.According to Fig. 7.3.15 the weighting of the switching conditions to be inverted must be entered in do.08...do.15. If several conditions shall be inverted, the sum is to be formed.

Example:
Output X2A.19 shall be set when the inverter is not accelerating! In this case we assign the switching condition 21 (inverter accelerates) for example to do.01 (enter value 21). We invert the switching condition (do.01) with do.09, so enter value 2.

7.3.19 Selection of switching conditions for flags 0...7 (do.16...do.23)

The parameters do.16...do.23 serve for the selection of the 8 defined switching conditions. The selection is done for each flag separately, where one can choose between no one and up to all 8 switching conditions. According to Fig. 7.3.15 the weighting of the selected switching conditions is to be entered into do.16...do.23. If several conditions shall be inverted, the sum is to be formed.

7.3.20 Linking the switching conditions for flags (do.24)

After the switching conditions are selected for each output, it can now be determined, how these are linked. As a default all conditions are OR-operated, i.e. if one of the selected conditions is met, the flag is set. Another possibility is the AND-operation which can be adjusted with do.24. AND-operation means that all selected conditions must be fulfilled before the flag is set.
Parameter do.24 is bit-coded. The table under 7.3.17 shows the assignment.

Figure 7.3.20 Linking the switching conditions in logic step 1

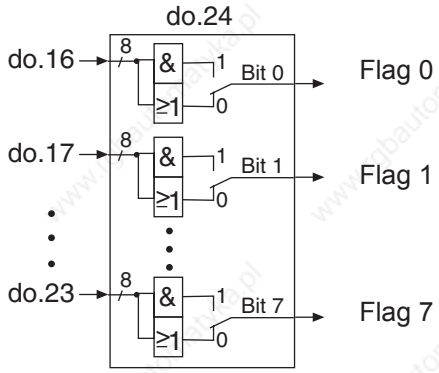

7.3.21 Inverting of flags (do.25...do.32)

Figure 7.3.21 Inversion and selection of flags

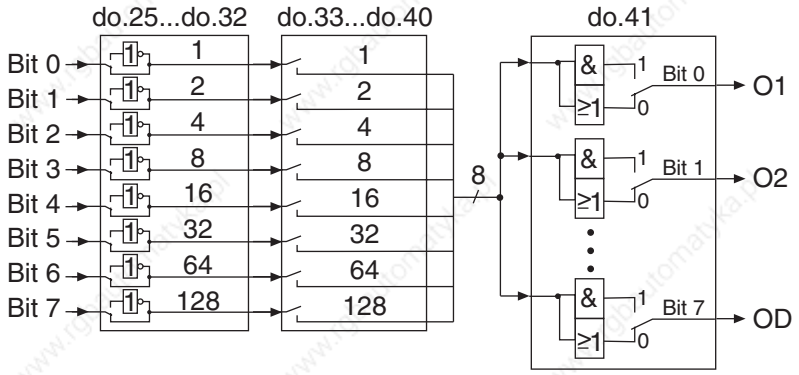

With the parameters do.25...do.32 each of the 8 flags (bit 0...7) from logic step 1 can be inverted separately.

Through this function it is possible to set any chosen flag as Non-flag. The parameter is bit-coded. According to Fig.7.3.18 the weighting of the flag to be inverted must be entered in do.25...do.32. If several flags shall be inverted, the sum is to be formed.

7.3.22 Selection of flags (do.33...do.40)

In the second logic step a selection of the flags of the first logic step can be made.The selection is done for each output separately, where one can choose between no one and up to all 8 flags.According to Fig. 7.3.18 the weighting of the selected flags is to be entered into do.33...do.40. If several flags shall be inverted, the sum is to be formed.

7.3.23 Linking the flags(do.41)

After the switching conditions are selected for each output, it can now be determined, how these are linked. As a default all flags are OR-operated, i.e. if one of the selected flags is met, the output switches.Another possibility is the AND-operation which can be adjusted with do.41. AND-operation means, that all selected flags must be set before the output switches.

Figure 7.3.23a. Linking the outputs

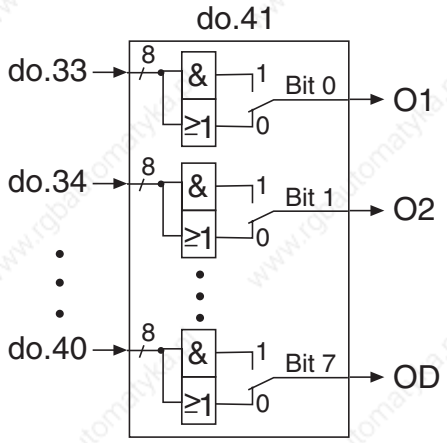

As shown in Fig. 7.3.23b, with parameter do.42 the outputs can be once again inverted after the linking. The parameter is bit-coded, i.e. according to following table the value belonging to this output must be entered. If several outputs shall be inverted, the sum is to be formed.

Figure 7.3.23b. Inversion of Outputs

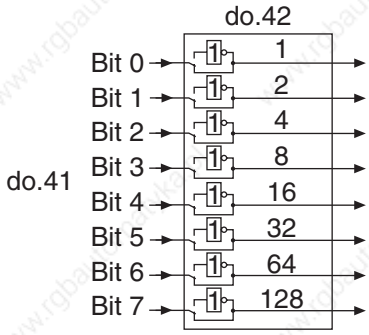

7.3.24 Output terminal state (ru.25) and digital output state (ru.80)

Parameter ru.25 indicates the logic condition of the digital outputs after the allocation by do.51. Parameter ru.80 indicates the logic condition before the allocation. If an output is set the appropriate decimal value according to the table below, is output. If several outputs are set, then the sum of the decimal values is output.

Name	Function	Decimal values
O1	Transistor output	1
O2	Transistor output	2
R1	Relay output	4
R2	Relay output	8
OA	Internal output	16
OB	Internal output	32
OC	Internal output	64
OD	Internal output	128

7.3.25 Hardware output allocation (do.51)

With do.51 the output signals are assigned to the output terminals O1, O2, R1 and R2. The assignment is done according to following table:

do.51: Hardware output allocation				
Bit	Value	Signal	Output	Default
0 + 1	0	O1	O1 (terminal X2A.18)	x
	1	O2		
	2	R1		
	3	R2		
2+3	0	O1	O2 (terminal X2A.19)	
	4	O2		x
	8	R1		
	12	R2		
4+5	0	O1	R1 (terminal X2A.24...26)	
	16	O2		
	32	R1		x
	48	R2		
6+7	0	O1	R2 (terminal X2A.27...29)	
	64	O2		
	128	R1		
	192	R2		x

7.3.26 Programming example

For a better understanding, the correlations are explained on the basis of a little more complex example.Following conditions are required:

- Condition 1: Output X2A.19 switches, if the inverter accelerates
- Condition 2: Relay X2A.24...26 switches, if the inverter load is > 100 %
- Condition 3: Relay X2A.27...29
- Output X2A.18 switches, if the conditions 2 and 3 are realised, but the inverter does **not** accelerate.

Solution proposal:

Set switching conditions, levels and hysteresis

First set the switching conditions and levels.
Set do.00 to "21" (inverter accelerates)
Set do.01 to "24" ((inverter utilization > level); set LE.01 to "100" (load level for do.01 100 %); set LE.09 to "5" (5 % hysteresis for level 1; not required but reasonable for optimal switching performance).
Set do.02 to "27" (actual value > level); set LE.02 to "4" (frequency level for do.02); set LE.10 to "0,5" (0.5 Hz hysteresis for level 2;not required but reasonable for optimal switching performance).

Select switching conditions

Set do.16 to "1" (evaluate switching condition of do.0)
Set do.17 to "2 (evaluate switching condition of do.1)
Set do.18 to "4" (evaluate switching condition of do.2)
Set do.8, do.9 and do.10 to "0" (no inverting)

The setting of do.24 is independent for this example, as only one condition each is set at do.16...18.

Set flags

Output O1 (terminal X2A.18)
Set do.33 to "7"(evaluate flags 1...3)
Set do.25 to "1"(flag 1 is inverted, it means that the condition is fulfilled if the inverter does not accelerate).
Set do.41 to "1" (the flags selected with do.33 become AND-operated)

Output O2 (terminal X2A.19)
Set do.34 to "1" (evaluate flag 3)
Set do.26 to "0" (no inverting)
The setting of do.41 is independent for this example, as only one flag is set at do.34.

Relay output R1 (terminal X2A.24...26)
Set do.35 to "2"(evaluate flag)
Set do.27 to "0" (no inverting)
The setting of do.41 is independent for this example, as only one flag is set at do.35.

Relay output R2 (terminal X2A.27...29)
Set do.36 to "4"(evaluate flag)
Set do.28 to "0" (no inverting)
The setting of do.41 is independent for this example, as only one flag is set at do.36.

1. Introduction	7.1 Operating and appliance data
2. Summary	7.2 Analog in- and outputs I
3. Hardware	7.3 Digital in- and outputs
4. Operation	7.4 Setpoint-, rotation- and ramp adjustment
5. Selection of Operating Mode	7.5 Motor data and controller adjustments of the asynchronous motor
6. Initial Start-up	7.6 Motor data and controller adjustments of the synchronous motor
7. Functions	7.7 Speed control
8. Error Assistance	7.8 Torque display and -limiting
9. Project Design	7.9 Torque control
10. Networks	7.10 Current control, -limiting and switching frequencies
11. Parameter Overview	7.11 Speed measurement
12. Annex	7.12 Positioning and synchronous control
	7.13 Protective Functions
	7.14 Parameter sets
	7.15 Special Functions
	7.16 CP-Parameter definition

7.4.1 Summary description 7.4-3

7.4.2 Reference source oP.00 ..... 7.4-4

7.4.3 Rotation source oP.01 ..... 7.4-7

7.4.4 Fixed frequencies (oP.18...23) 7.4-11

7.4.5 Setpoint limits 7.4-13

7.4.6 Setpoint calculation 7.4-15

7.4.7 Ramp generator 7.4-16

7.4.7.1 Acc dec mode 7.4-16

7.4.7.2 Ramp with constant ascent 7.4-17

7.4.7.2.1 Linear ramps 7.4-17

7.4.7.2.2 S-curve times 7.4-18

7.4.7.3 Ramp with constant time 7.4-19

7.4.7.4 Ogive run 7.4-20

7.4.7.5 Time factor acceleration/deceleration (oP.62) 7.4-21

7.4.8 Acc dec mode 7.4-22

7.4.8.1 Ramp with constant ascent 7.4-22

7.4.8.2 Ramp with constant time 7.4-22

7.4 Setpoint-, rotation- and ramp adjustment

7.4.1 Summary description

The setpoint of the KEB COMBIVERT F5 can be preadjusted analog as well as digital. The AUX-function adds or multiplies an analog setpoint to/with other setpoint settings.
The setpoint and rotation selection links the different setpoint sources with the possible sources of rotation direction. The signal thus obtained is used for further setpoint calculation.
Only after interrogation of the absolute setpoint limits, all the data that is required for the ramp calculation is available.

Fig. 7.4.1 Principle of setpoint and ramp adjustment

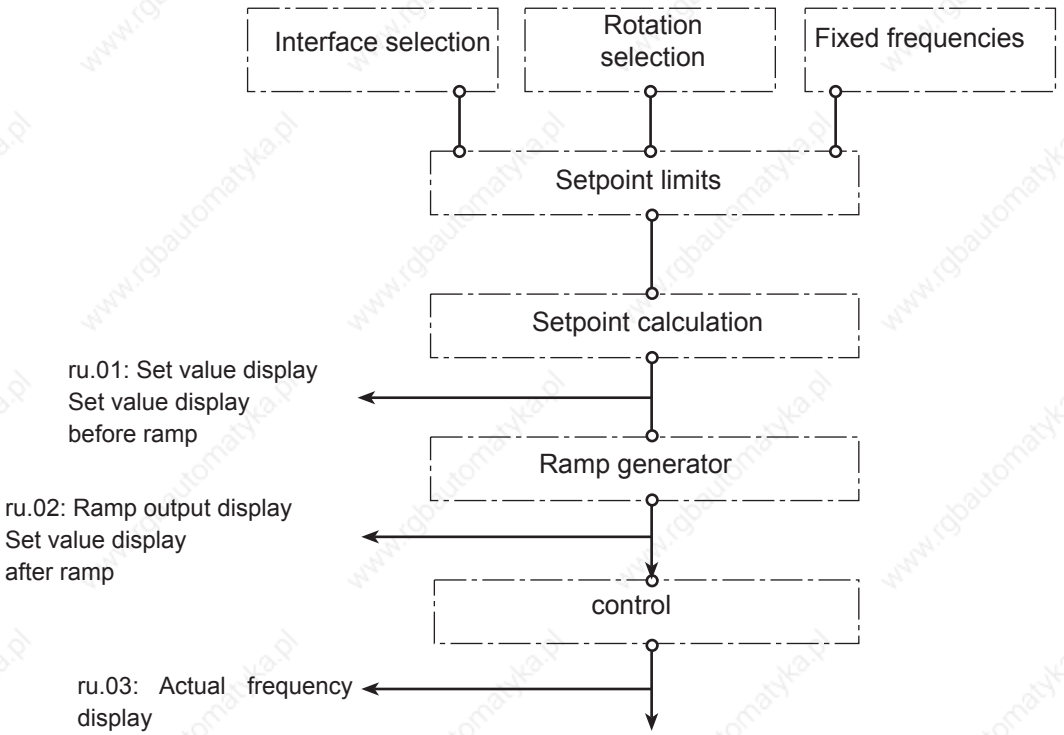

7.4.2 Reference source oP.00

oP.00: Setpoint source		
Value	Function	Notice
0: Analog input REF	Setting of the speed setpoint via REF or AUX input 0% corresponds to the „minimum setpoint“ (oP.06 at clockwise rotation / oP.07 at counter clockwise rotation) +100% corresponds to "maximum setpoint" (oP.10 at clockwise rotation / oP.11 at counter clockwise rotation) If the rotation direction is determined by the sign of the setpoint, then positive values and 0 represent clockwise rotation, negative values represent counter clockwise rotation.	The selection of a hardware analog input as REF is done via parameter An.30 „Selection of REF Inp./ AUX Fct“ factory setting: AN1 is the REF input. The selection of how the AUX input value is calculated is also done via An.30. Default: AN2 is the AUX input.
1: Analog input AUX		
2: Digital absolute (op.03)	The value of oP.03 "digital setpoint setting" is used as speed setpoint.	The value range and the resolution depend on the setting of the speed mode in parameter ud.02 "control type".
3: Digital in % (op.05)	The percentage value in oP.05 "setpoint setting as percentage" is used for the speed setpoint.	Calculation of the speed setpoints from the percentage value is done the same way as for the REF and AUX inputs.
4: Motor potentiometer (ru.37)	The percentage value oP.52 "motor potentiometer value" is used as the speed setpoint (for more on motor potentiometer function see chapter 7.15).	
5: Set speed value (sy.52)	The value of SY.52 "setpoint speed setting" is used as the speed setpoint.	Value range: +/- 32000 rpm Resolution: 1 rpm Exception: In the high frequency modes up to 64000 or 128000 rpm are other values valid (see chapter 5.1)
6: Ext. PID output display (ru.52)	The percentage output value of the PID-controller (ru.52 "ext. PID output display ") is used as the speed setpoint.	Calculation of the speed setpoints from the percentage value is done the same way as for the REF and AUX inputs.
7: Speed Measurement 1	The speed measured by encoder channels 1 and 2, respectively, is used as the speed setpoint.	
8: Speed Measurement 2		
9: AN 1 direct (+/- 10V)	Setting of the speed setpoints via AN1. Setting of the setpoint of the speed controller from the analog value is done with a fast scanning grid, therefore, some limitations in the settings options have to be accepted.	Modified calculation of the setpoint and limitations in the settings options, see instructions.
10: High resolution in % (ru.63)	Setting of the speed setpoint via oP.63 "setpoint high resolution". This mode must be used if the standard speed resolution is insufficient.	Configuration of the high resolution and calculation of the speed setpoint from parameters oP.63 / oP.64 see instructions.

Other functions like quick stop, fixed frequency, or positioning have priority over "standard operation" and can therefore lead to different speed setpoints than selected in oP.00 .
The following speed setpoint limiting blocks can change the setpoint.

Direct analog setpoint setting (AN1 direct)

The cycle time of the software is 1 ms. During this time the analog input/output status is updated once. Additionally the inverter requires a processing time of 1... 3 ms before the new setpoint value is calculated. If the inverter is used as secondary final control element of a superior control, this time can impair the dynamics of the entire closed-loop control system.
In such cases the analog setpoint value can be processed directly to the control processor (direct setpoint adjustment). Thus a sampling time of 250 µs is possible. To enable this fast response to an analog setpoint value, some restrictions must be accepted:

- The calculation formula of the analog setpoint value changes. The parameters oP.06 / oP.07 are without influence on the setpoint calculation.

  percentage analog value = (analog value/10V x 100% - An.06) x An.05

  This value is limited to+/- 100%.

  $_{n}$set = limited analog value in percent x oP.10

  This value is limited with oP.14 for both directions of rotation.

- The setpoint limitations oP.06 / oP.07 / oP.11 do not have any function; the frequency setpoint is only limited by oP. 14 (for both directions).
- The acceleration / deceleration and S-curve time have no effect; it is operated internally without ramps.
- The parameters An.01...04 and An.07...09 are without any function.
- The stop position controller cannot be activated.

High resolution reference setting

The setpoint setting with the settings oP.00 = 0...9 is 16 Bit wide. This results in a maximum resolution of -1 0.125 rpm in 4000-1-rpm-mode (ud.02 = 4 and 8).

For applications needing a higher resolution, the high resolution setpoint setting was introduced. Here, the setpoint is set as a 32-Bit-value.
Since only a 16-Bit-value can be output, the low-order 16 bits of the ramp output value are upsampled. On overrun, the base value is increased for one cycle (1 ms) (by 0.125 rpm in 4000 rpm-mode). These setpoint fluctuations are smoothed mechanically, leading to the higher average resolution.

To achieve the highest possible resolution for the application, two parameters can be used:

oP.64 Relative value high-resolution

The parameter oP.64 sets the reference value of the calculation and is dependent on ud.02.

oP.63 Relative value high-resolution

The factor for the setpoint calculation is set here:

$$\text{Setpoint} = \frac{\text{oP.63 x oP.64}}{2^{30}}$$

That means: If for oP.63 a value of 230 is set, the setpoint is equal to oP.64 "relative value high-resolution"

The maximum for the setpoint is twice the reference value.

The achievable high resolution is calculated as follows:

$$\text{High resolution} = \frac{\text{oP.64}}{2^{30}}$$

If oP.64 is set to 2000 rpm, i.e., half the maximum value (4000 rpm mode), the resulting resolution is:

$$\text{High resolution} = \frac{2000\ \text{rpm}}{2^{30}} = 1{,}86 \times 10^{-6}\ \text{rpm}$$

This should suffice for all applications.

The adjustment value for oP.63 is calculated as follows:

$$\text{oP.63} = \frac{\text{desired setpoint}}{\text{oP.64}} \times 2^{30}$$

Example 1

Reference value (oP.64):	2000 rpm
Desired setpoint:	0,140624 rpm

$$\text{oP.63} = \frac{0{,}140624\ \text{rpm}}{2000\ \text{rpm}} \times 2^{30} = 75497$$

Example 2

Reference value (oP.64):	2000 rpm
Desired setpoint:	32,37843 rpm

$$oP.63 = \frac{32{,}37843\ rpm}{2000\ rpm} \times 2^{30} = 17383037$$

Resolution and scaling factor are the same as for oP.63. Due to internal rounding, the value of ru.82 may be 1 less than the set value oP.63.

7.4.3 Rotation source oP.01

The selection of rotation direction determines the manner in which the rotation direction is adjusted. One can choose between following possibilities:

Figure 7.4.3 Rotation selection with oP.01

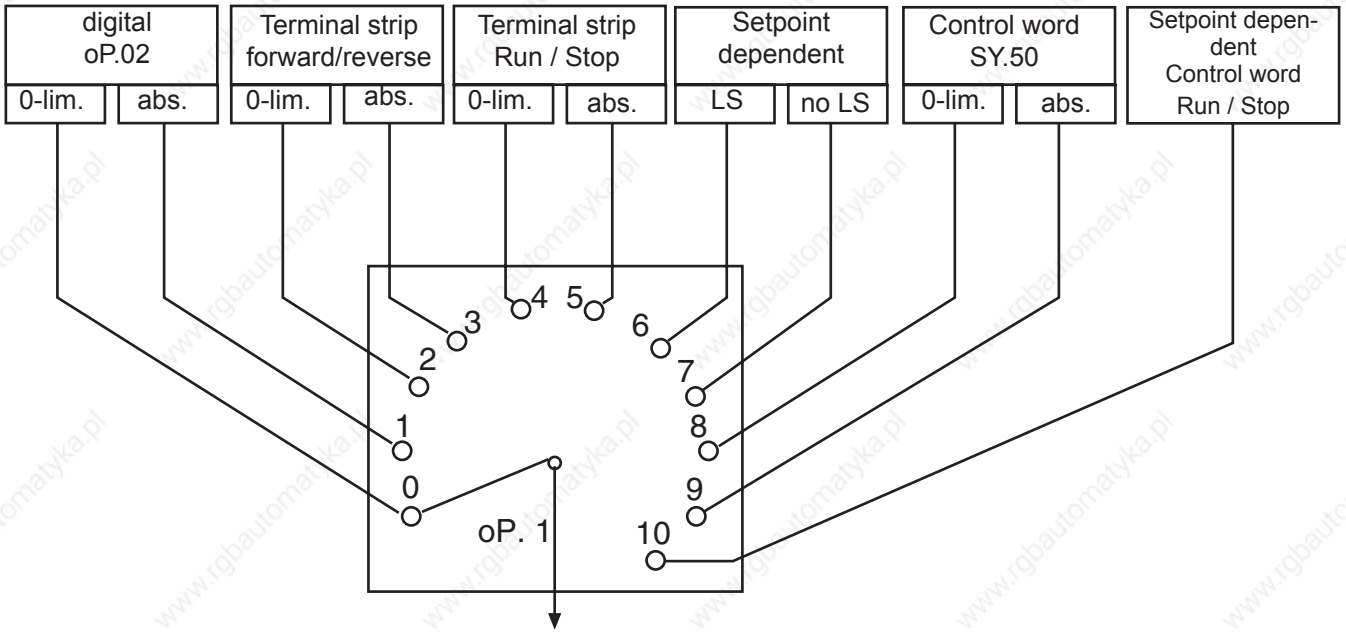

0-limited or absolute

Concerning the adjustment of direction of rotation it is differentiated between two evaluations:

0 limited:
negative setpoints are set to zero, i.e. only positive setpoints are driven in accordance with the selected rotation direction

absolute:

no sign of the set value is evaluated and it is always driven with the amount in accordance with the selected rotation direction

Figure 7.4.3.a Absolute and 0 limited set value setting

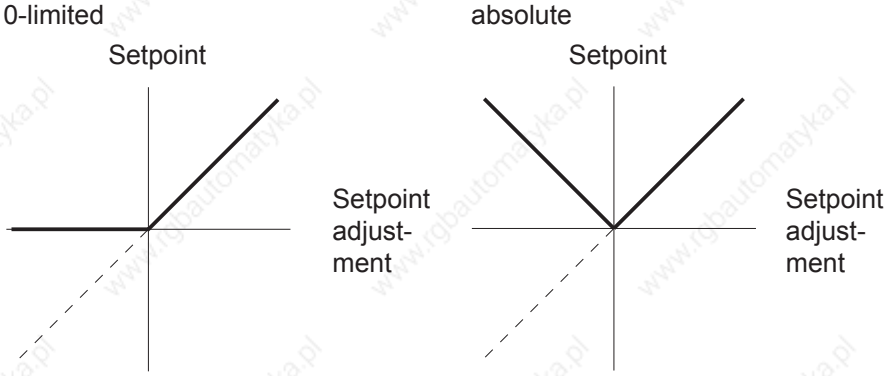

Rotation setting oP.02 ; (oP.01 = 0 or 1)

oP.02: Rotation setting		
Bit	Display	Setpoint rotation
0	LS	Standstill (Low Speed)
1	F	forward (clockwise rotation)
2	R	reverse (counter-clockwise rotation)

Rotation adjustment via terminal strip

The rotation selection via terminal strip allows the adjustment of the direction of rotation via switch or from a primary control.

Direction forward input selection (Run / Stop) oP.60, direction reverse (forward / reverse) oP.61

With parameter oP.60 one input is determined for rotation direction forward (or run/stop) and with oP.61 one input for rotation direction reverse (respectively forward/reverse). (see chapter 7.3)

oP.01 = "2" or "3"

In case of rotation selection forward/reverse (oP.01= "2" or "3") the inputs determined with oP.60 and oP.61 work as follows:

Forward	Reverse	Input	X2A.14	X2A.15
F	R	Function	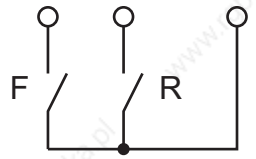	
0	0	LS		
0	1	counter-clockwise rotation		
1	0	clockwise rotation		
1	1	clockwise rotation		

oP.1 = "4" or "5"

In the case of rotation selection run/stop and forward/reverse (oP.01= "4" or "5") the inputs determined with oP.60 and oP.61 work as follows:

Forward	Reverse	Input
F	R	Function
0	0	LS
0	1	LS
1	0	clockwise rotation
1	1	counter-clockwise rotation

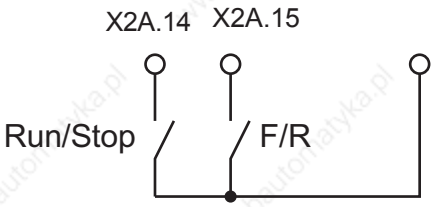

Rotation direction is dependent on the sign of the setpoint

The direction of rotation can be defined with the preadjusted set value signal. In the case of analog signals through adjustment of positive or negative voltages. In the case of digital signals through adjustment of positive values (without sign) or negative values (negative sign in the display).

Following adjustments are possible:

Evaluation with LS (Switch off the modulation) (oP.01 = 6 or 10)

In this case "F" or "R" must be set via a digital input, digital via oP.2 or "start" via control word SY.50 in order for the inverter to modulate. It is unimportant which rotation setting is used, as the direction of rotation is dependent on the setpoint.

oP.01 = 10: The rotation direction release is done exclusively via the control word Run/Stop.

No rotation direction set	->	LS (Modulation disabled)
A direction of rotation is set and oP.01 = 6 or 10	->	Clockwise direction of rotation
negative value	->	Anti-clockwise direction of rotation

Evaluation without LS (oP.01 = 7)

In this case the inverter always modulates. No direction of rotation needs to be adjusted.

oP.01 = 7:	pos. value (also 0)	->	Clockwise direction of rotation
	negative value	->	Anti-clockwise direction of rotation

Rotation direction dependent on the control word SY.50

The control word is used for the state control of the inverter via bus. In order for the inverter to react to the control word, the respective control process must be enabled (oP.01=8 or 9; fr.02 = 5). When adjusting the direction of rotation via the control word, the setpoint can be evaluated 0-limited (oP.01 = 8) or absolute (oP.01 = 9).

Control word Sy.50		
Bit	Function	Description
2	**Run / Stop**	0 = Setpoint rotation Stop; 1 = Rotation direction Run (source of set value direction op.1 = 6, 8, 9 or 10)
3	**For / Rev**	0 = Setpoint rotation forward; 1 = Rotation direction counter-clockwise (source of set value direction op.1 = 6, 8, 9 or 10)

If Run/Stop is to be adjusted over the control word, oP.02 must be set to "0". The terminals F/R may not be wired (OR-operation of terminal, oP.02 and Sy.50).

7.4.4 Fixed frequencies (oP.18...23)

The KEB COMBIVERT supports up to 3 fixed frequencies for each parameter set, which can be selected via two digital inputs. With oP.19 and oP.20 the inputs required for the selection are defined (also see "Digital inputs" Chapt. 7.3.11). The rotation direction source for fixed value mode is defined with oP.18. The adjustment is independent of oP.01 and is valid exclusively for the fixed frequencies. The adjustment of a fixed frequency has priority over the "normal" setpoint adjustment.

Figure 7.4.4 Fixed values

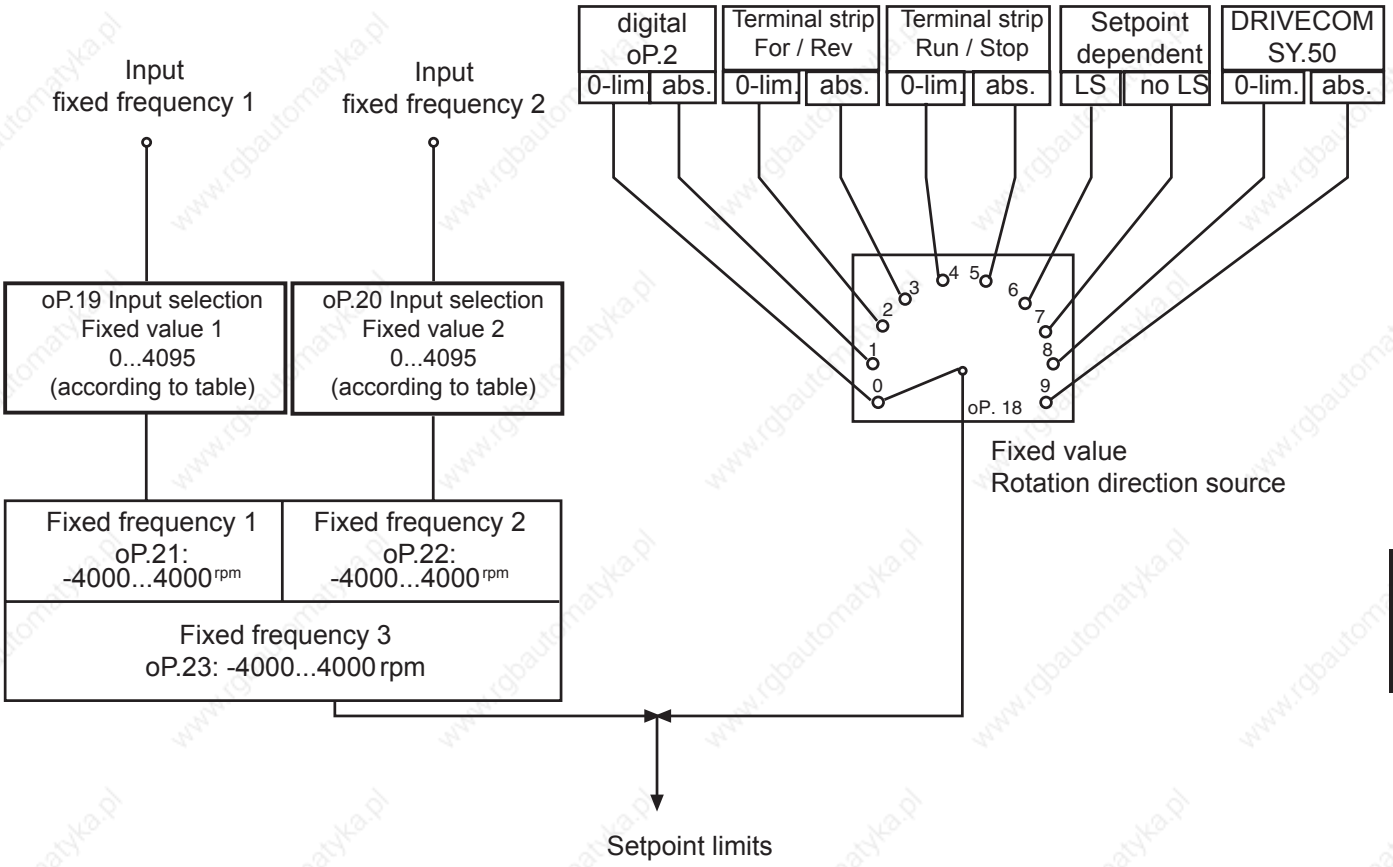

Selection of fixed values

Figure 7.4.4.a Selection of fixed values

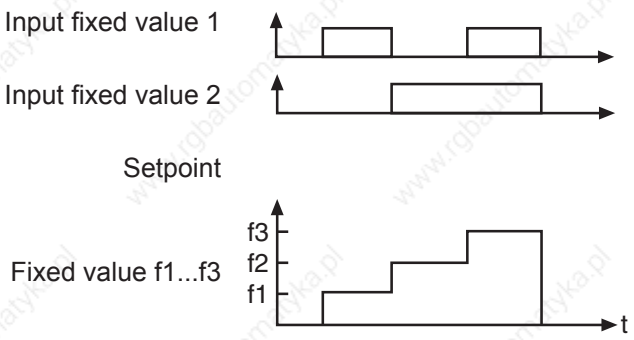

Fixed value rotation direction source (oP.18)

With oP.18 it is defined how the direction of rotation is determined in case of active fixed value.The function and the value range correspond to oP.1.

oP.18: Step value rotation source	
Value	Function
0	Digital via oP.2; setpoint 0-limited
1	Digital via oP.2; setpoint absolute
2	Terminal strip F/R; setpoint 0-limited
3	Terminal strip F/R; setpoint absolute
4	Terminal strip Run/Stop; setpoint 0-limited
5	Terminal strip Run/Stop; setpoint absolute
6	Setpoint-dependent with LS-recognition
7	Setpoint-dependent without LS-recognition
8	Control word SY.50; 0-limited
9	Control word SY.50; 0-absolute
10	Setpoint + control word(SY.50) R/S

Fixed value input selection 1 and 2 (oP.19; oP.20)

See chapter 7.3.1 "digital inputs".

Fixed value 1...3 (oP.21, oP.22, oP.23)

The three fixed values oP.21...23 are set-programmable and can be adjusted in the range of -4000...4000rpm.

7.4.5 Setpoint limits

Following limit values can be preadjusted:

Figure 7.4.5 Setpoint limits

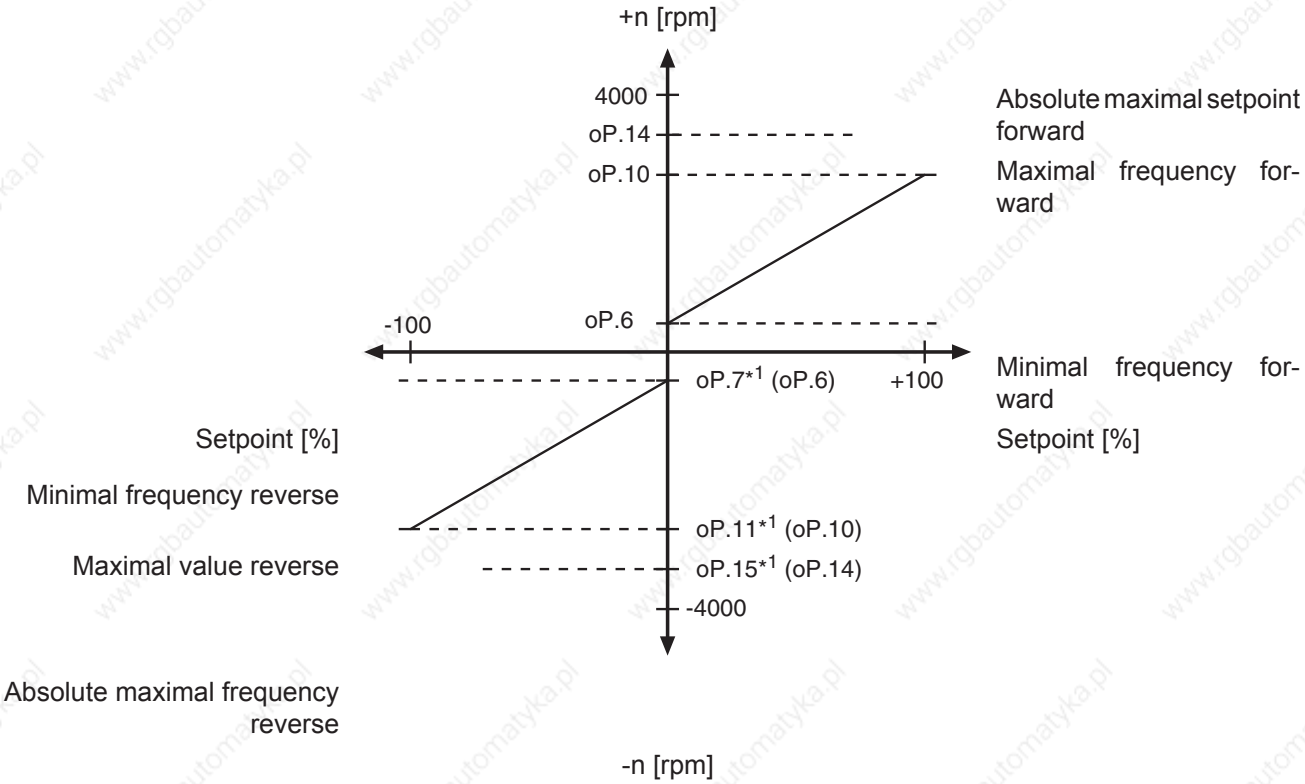

*1 If the value "=For" is adjusted in these parameters (limit values rotation direction reverse), then the adjusted values for rotation direction forward (oP.06, oP.10 and oP.14) are valid.

Min./ max. setpoints (oP.6, oP.7, oP.10, oP.11)

In case of analog and percentaged setpoint adjustment in percent the minimal and maximal frequencies form the characteristic for the frequency calculation (0% = minimal frequency; 100% = maximal frequency). In case of digital setpoint adjustment or fixed value the minimal and maximal frequencies limit the setpoint. Separate limits can be adjusted for both rotation directions. If the value "For" is adjusted for rotation direction "Reverse", then the values for "Forward" are valid.

Setting range:	oP.06: 0...4000 rpm	Default: 0 rpm
	oP.10: 0...4000 rpm	Default: 2100 rpm
	oP.07: =For, 0...4000 rpm	Default: =For
	oP.11: =For, 0...4000 rpm	Default: =For

Absolute maximum setpoints (oP.14, oP.15)

After the minimal and maximal frequencies the setpoint is limited through the absolute maximal frequency and subsequently transferred to the ramp generator. Since the analog setpoint is always calculated onto the maximal frequencies (oP.10, oP.11), it is possible, to adjust the characteristic of the analog setpoint with the same gain for both rotation directions (see Fig.7.4.5.a) in spite of different maximal output frequencies. If the value "For" is adjusted in oP.15, then the absolute maximal speed of oP.14 is valid for both directions of rotation.

Speed Limit Clockwise Rotation (oP.40) / Speed Limit Counter Clockwise Rotation (oP.41)

All other limits (oP.10 / oP.11 "max. setpoint" and oP.14 / oP.15 "abs. max. setpoint") limit the speed setpoint exclusively.

This function is active only if the alarm for the utilised encoder channel is activated (alarm = on) in parameter Ec.42 "encoder alarm mode". In vector-controlled operation without speed feedback, speed limiting is always active.

The status „58: ERROR! speed limit exceeded" (E.OS) is triggered if ru.07 "actual value display" exceeds either oP.40 / oP.41 "output frequency limit" or ru.79 "abs. speed EMC"(onylfor synchronous motors).
With oP.40 / oP.41, the user sets limits that may not be exceeded by the application under any circumstances. ru.79 shows the maximum speed for a synchronous motor which, if exceeded, leads to an EMC of the motor high enough to damage the DC-intermediate circuit of the inverter.
Reason for the occurence of excessive speed can be too small a distance between the maximum setpoint and the speed limit, so that overshoots can trigger the error. Other causes can be (e.g., caused by EMC) malfunctions in the speed measurement or a noisy, insufficiently smoothed speed estimate in the encoderless control (SCL or ASCL).

Fig. 7.4.5.a Setpoint limits

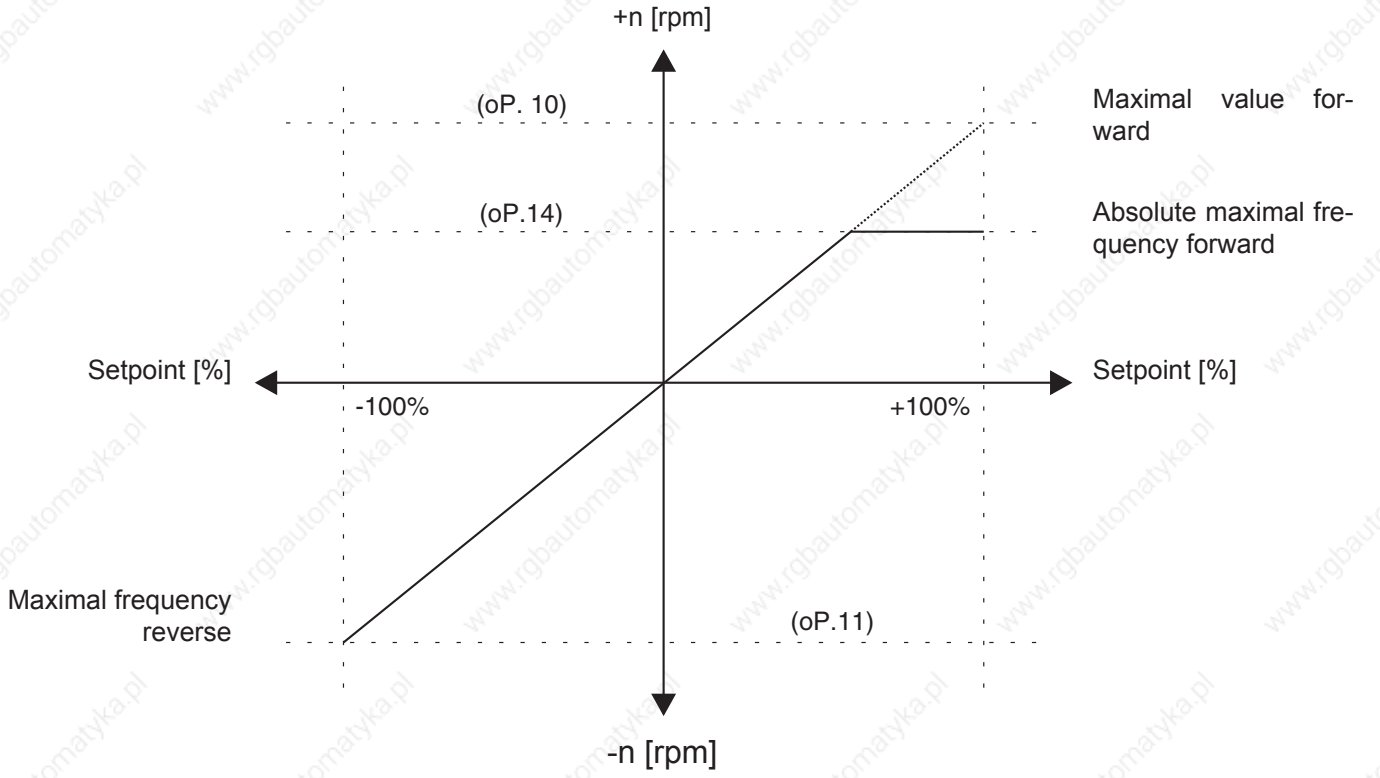

7.4.6 Setpoint calculation

The unit differentiates between two setpoint adjustments:

- the percentage setpoint adjustment

  With the adjusted setpoint limits the speed range 0%...100% is defined. In this case the adjustment of 0% corresponds to the minimal speed and 100% to the maximal speed.

The speed after the setpoint limiting is calculated according to following formula:

$$\text{Positive setpoint} = oP.06 + \left(\text{setpoint setting [\%]} \times \frac{oP.10 - oP.06}{100\%}\right)$$

$$\text{Negative setpoint} = oP.07 + \left(\text{setpoint setting [\%]} \times \frac{oP.11 - oP.07}{100\%}\right)$$

The absolute setpoint adjustment, i.e. the setpoint is directly adjusted as speed and limited through the corresponding minimal and maximal values as well as through the absolute maximal values.

The setpoint sources are assigned as follows:

Setpoint adjustment in percent	Absolute setpoint adjustment
Terminal strip (analog setpoint)	Keyboard/Bus absolute
Keyboard/bus in %	Set speed value Sy.52
Motor potentiometer	Speed Measurement
Technology Control	High resolution

Fade out target for setpoint

Setting ranges are faded out with this function, in order to avoid resonances. The target is pass through with the ramp. The setpoint value is always adjusted to the upper or lower limit of the target.

Parameter:

oP.65 Min. proh. reference 1
oP.66 Max. proh. reference 1
oP.67 Min proh. reference 2
oP.68 Max. proh. reference 2

The parameters are not programmable.
The adjusted values are accepted still as setpoint value, thus the function is not active in case that lower and upper limit have the same value. If a higher value is selected for the lower limit than for the upper limit, the function is also not active.

7.4.7 Ramp generator

The ramp generator assigns an adjustable time to a speed change, during this time the change stall take place. The acceleration time (for pos. speed changes) and deceleration time (for neg. speed changes) can be adjusted separately for both directions of rotation.

7.4.7.1Acc dec mode

The different ramp functions can be adjusted separately for each frequency change (acceleration forward, deceleration forward, etc.).
The selection is made with oP.27 and can be adjusted separately in each set.

Mode „constant ascent “concerns to the standard ramp generator with defined acceleration, deceleration and jolt values (see chapter 7.4.7.2).

Mode „constant time “is needed only in exceptional cases, if acceleration / deceleration shall be executed always indepent of the setpoint in the same time (see chapter 7.4.7.3).

Mode „ogive run “is a special form of the mode „constant ascent “, which is particulary suitable for lift and traversing drives (see chapter 7.4.7.4).

The more exact explanation of each operation mode is done in the respective sub-chapters.

oP.27 acc. dec. mode			
Bit	Meaning	Value	Explanation
0,1	forward acceleration	0: BR constant ramp	Standard operation mode
		1: BR constant time / actual setpoint	Constant time
		2: BR constant time / last setpoint	Do not adjust!
		3: BR ogive run	Ogive run
2,3	forward deceleration	0: VR constant ramp	Standard operation mode
		4: VR constant time / actual setpoint	Do not adjust!
		8: VR constant time / last setpoint	Constant time
		12: VR ogive run	Ogive run
4,5	reverse acceleration	0: BL constant ramp	Standard operation mode
		16: BL constant time / actual setpoint	Constant time
		32: BL constant time / last setpoint	Do not adjust!
		48: BL ogive run	Ogive run
6,7	reverse deceleration	0: VL constant ramp	Standard operation mode
		64: VL constant time / actual setpoint	Do not adjust!
		128: VL constant time / last setpoint	Constant time
		192: VL ogive run	Ogive run

7.4.7.2Ramp with constant ascent

This mode is the KEB factory setting. The acceleration / deceleration values are defined with parameters oP.28 to oP.31.
The jerk (i.e. the permissible acceleration / deceleration change) is defined with parameters oP.32...oP.35 and oP.70... oP.73.

7.4.7.2.1 Linear ramps

The linear ramps are parameterized with parameters oP.28 „acceleration time forward“, oP.29 „acceleration time reverse“, oP.30 „deceleration time forward“and oP.31 „deceleration time reverse“.

Fig. 7.4.7.2.1 Acceleration and deceleration times

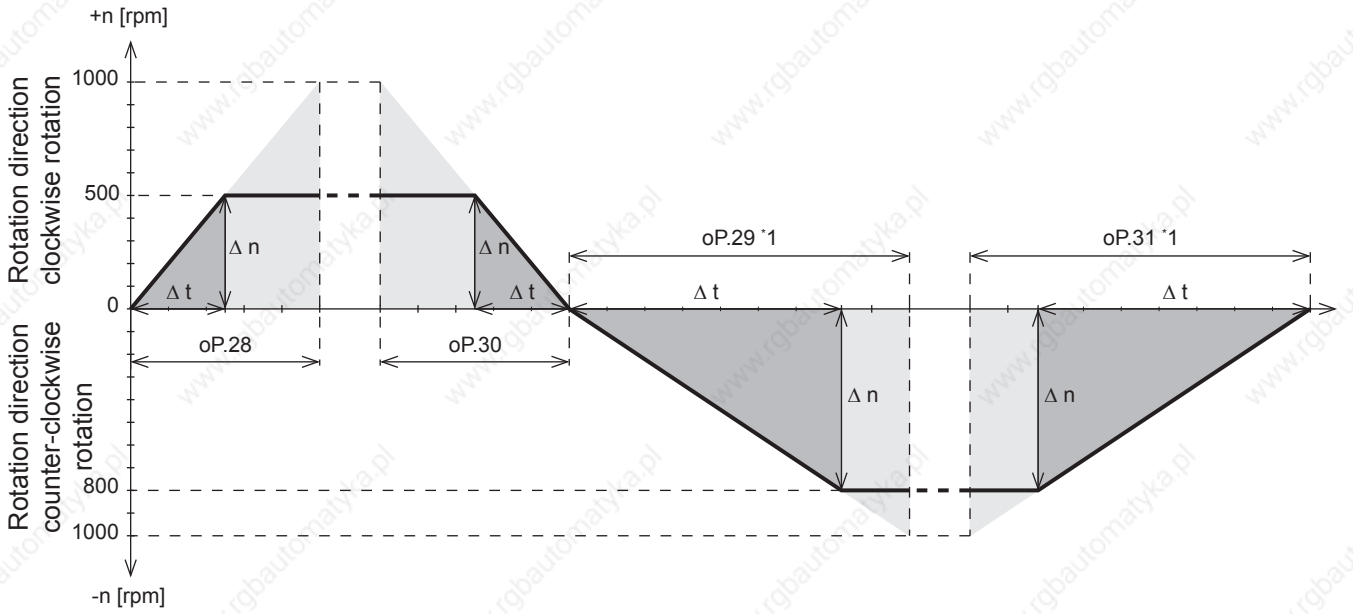

oP.28		Acceleration time forward
oP.29	*1	Acceleration time reverse
oP.30	*2	Deceleration time forward
oP.31	*1	Deceleration time reverse
Δ n		Speed change
Δ t		Acceleration time for Δn

*1 If the value "=For" is adjusted in these parameters (acceleration and deceleration times for rotation direction reverse), then the values of rotation direction forward (oP.28 and oP.30) are valid.

*2 If the value "=Acc" is adjusted, then the value of acceleration forward (oP.28) is valid.

$$\frac{\text{ramp time to be adjusted (oP.28...oP.31)}}{\text{reference speed (dependent on ud.02)}} = \frac{\text{required ramp time } (\Delta t)}{\text{speed change } (\Delta n)}$$

Reference speed = 1000 rpm in 4000 rpm mode
2000 rpm in 8000 rpm mode (see chapter 5)

Example: A drive should accelerate from 100 rpm to 1000 rpm in 5 s.

desired ramp time Δ t = 5 s
speed change Δ n = 900 rpm
4000 rpm mode reference speed = 1000 rpm

ramp time to be adjusted

$$0P.28 = \frac{5\ s * 1000\ rpm}{900\ rpm} = 5{,}56\ s$$

7.4.7.2.2 S-curve times

For some applications it is of advantage when the drive starts and stops jerk-free. This function is achieved through a straightening of the acceleration and deceleration ramps.

Parameters oP.32 „s-curve time acc. for.“ to oP.35 „s-curve time dec. rev.“, and oP.70 „s-curve up time acc.for.“ to oP.73 „s-curve up time dec. rev.“ define the time for acceleration from 0 to the maximum value and deceleration from the maximum value to 0.

The maximum value for acceleration / deceleration is defined by the linear ramp times oP.28 .. oP.31.

Figure 7.4.7.a S-curve time

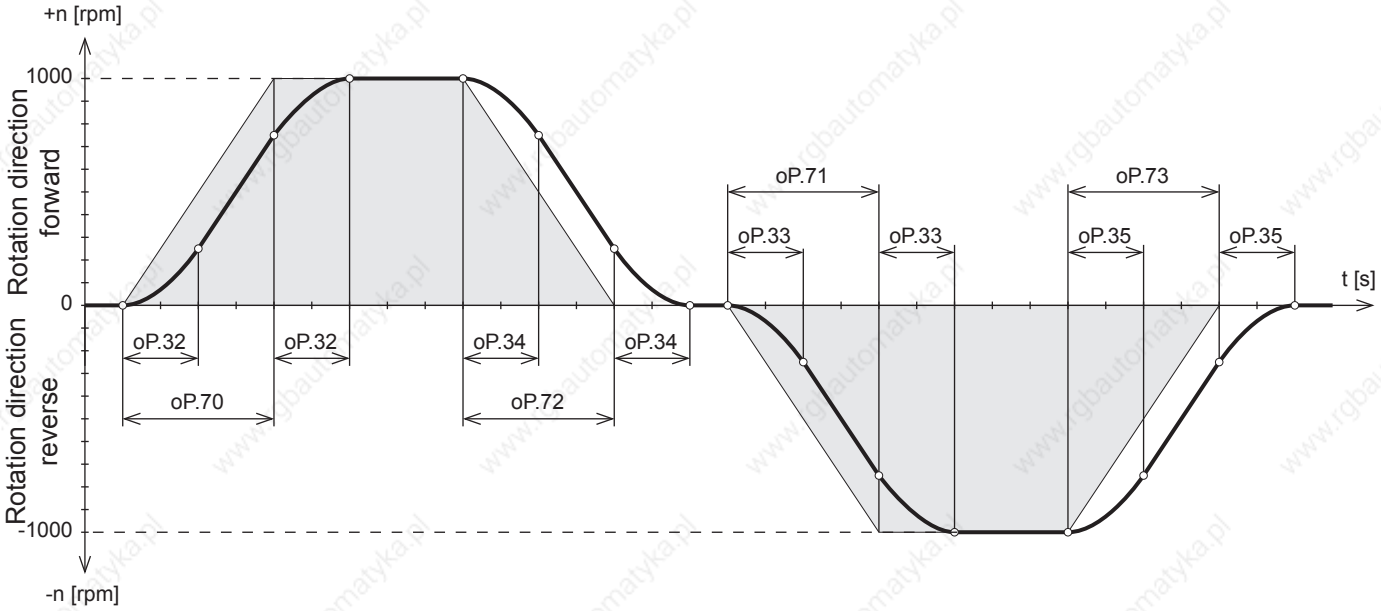

Definition of the s-curves (straightening time):

Parameter	Value range	Factory setting	Notice
oP.32: S-curve time acceleration forward	0: off	X	
	0,01 s .. 5 s		
oP.33: S-curve time acceleration reverse	-1: see forward	X	= op.32
	0: off		
	0,01 s .. 5 s		
oP.34: S-curve time deceleration forward	-1: see acceleration	X	= op.32
	0: off		
	0,01 s .. 5 s		

further on next side

Parameter	Value range	Factory setting	Notice
oP.35: S-curve time deceleration reverse	-1: see forward	X	= op.34
	0: off		
	0,01 s .. 5 s		
oP.70: s-curve up time acc. for.	-1: lower s-curve	X	= op.32
	0: off		
	0,01 s .. 5 s		
oP.71: s-curve up time acc. rev.	-2: forward parameter		= op.70
	-1: lower s-curve	X	= op.33
	0: off		
	0,01 s .. 5 s		
oP.72: s-curve up time dec. for.	-2: acceleration parameter		= op.70
	-1: lower s-curve	X	= op.34
	0: off		
	0,01 s .. 5 s		
oP.73: s-curve up time dec. rev.	-2: acceleration parameter		= op.71
	-1: lower s-curve	X	= op.35
	0: off		
	0,01 s .. 5 s		

7.4.7.3 Ramp with constant time

At the ramp with constant time oP.28… oP31 adjusts the time where the inverter accelerates from speed 0 to the actual setpoint (ramp mode = 1) and/or deceleration from the last setpoint to speed 0 (ramp mode = 2). Then the acceleration/deceleration time at start/stop operation is independent from the setpoint. In this operating mode s-curves are not possible.

Example for the use of ramps with constant time:
Two conveyor belts run with different speeds. Both of them receive the stop-command at the same time. The belts reduce the speed in proportion to the adjusted time and come to a standstill simultaneously.

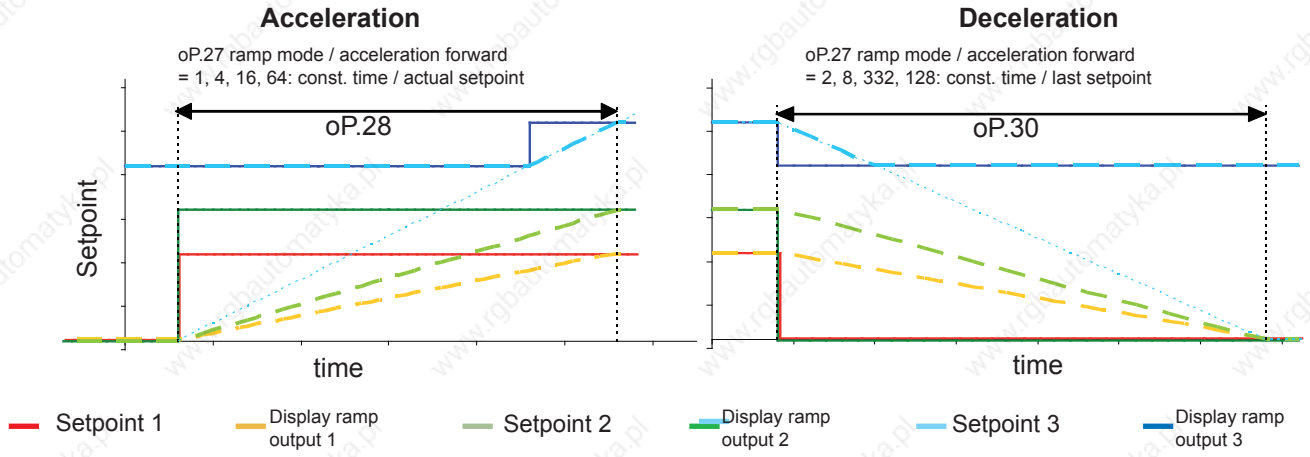

Acceleration at ramp mode =
constant time / actual setpoint
(value 1, 4, 16, 64) is:

$$\frac{\Delta n}{\Delta t} = \frac{\text{actual set value}}{\text{acceleration time (oP.30/oP.31)}}$$

Deceleration at ramp mode =
constant time / last setpoint
(value 2, 8, 32, 128) is:

$$\frac{\Delta n}{\Delta t} = \frac{\text{last setpoint}}{\text{deceleration time (oP.30/oP.31)}}$$

Attention

Ramp mode „constant time / actual setpoint“ should always be selected for acceleration and "constant time / last setpoint" for deceleration.

The other adjustments are programmable and can be used if it shall be operated between different setpoint speeds (except 0).
When starting from 0 and/or deceleration to 0, they have the following effects:

If the mode „constant time / actual setpoint“ is selected for deceleration, deceleration is calculated to:

$$\frac{\Delta n}{\Delta t} = \frac{\text{actual set value}}{\text{acceleration time (oP.30/oP.31)}} = \frac{\text{0 rpm}}{\text{deceleration time}} = 0$$

That means: the drive don´t decelerate, it keeps running with the last setpoint before stop command.

Minimum acceleration / deceleration is limited programatically to:

$\Delta n / \Delta t$ = reference speed / 4800 s (reference speed dep. on ud.02 / see chapter 5)

That means: the drive would not continue to run constantly, but it decelerates very slowly.

7.4.7.4Ogive run

In the mode "constant ascent", a change in setpoint while the inverter is still in the acceleration / deceleration phase will lead to the fastest possible response.
If the new setpoint requires, e.g., a change from acceleration to deceleration, the acceleration ramp is interrupted and the deceleration ramp is started immediately.
This can lead to an undefined jolt.

If ogive run is selected, the programmed s-curve times are always used, the acceleration / deceleration change continuously and no undefined jolt occurs.

Figure 7.4.7.4 Ogive run

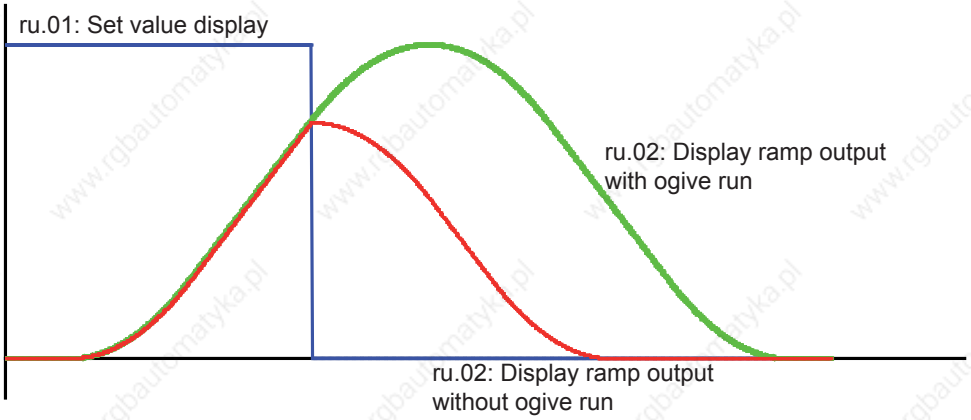

7.4.7.5Time factor acceleration/deceleration (oP.62)

The time factor extends the standard ramp time (oP.28...31) by the adjusted value.
The s-curve time do not change.

oP.62: Time factor acceleration/deceleration	
Value	Description
0: off	The linear ramp times are extended by the adjusted factor.
1: double	
2: 4-fold	
3: 8-fold	
4: 16-fold	

7.4.8 Acc dec mode

7.4.8.1 Ramp with constant ascent

The different ramp functions can be adjusted separately for every frequency change (acceleration forward, deceleration forward and so on). The selection is made with oP.27 and is adjustable separately in each set. The function is activated after pressing "ENTER".

oP.27: Acc dec mode				
Ramp	**Bit**	**Value**	**Mode**	**Reference speed**
Acc. clockwise rotation	0 + 1	0	Const. ascent	1000rpm (dep.on ud.02)
		1	Const. time	Actual set value
		2	* Const. time	Last set value at constant run
		3	Ogive run	1000rpm (dep.on ud.02)
dec. clockwise rotation	2 + 3	0	Const. ascent	1000rpm (dep.on ud.02)
		4	* Const. time	Actual set value
		8	Const. time	Last set value at constant run
		12	Ogive run	1000rpm (dep.on ud.02)
Acc. counter-clockwise rotation	4 + 5	0	Const. ascent	1000rpm (dep.on ud.02)
		16	Const. time	Actual set value
		32	* Const. time	Last set value at constant run
		48	Ogive run	1000rpm (dep.on ud.02)
dec. counter-clockwise rotation	6 + 7	0	Const. ascent	1000rpm (dep.on ud.02)
		64	* Const. time	Actual set value
		128	Const. time	Last set value at constant run
		192	Ogive run	1000rpm (dep.on ud.02)

* Do not adjust these values - they are only sensible, if acceleration does not take place from standstill or deceleration is not made to standstill.

7.4.8.2 Ramp with constant time

At the ramp with constant time the acceleration and deceleration times adjusted with oP.28...oP31 always equal the real ramp times, independent of the set value. In this operating mode S-curves are not possible.

Here an example for the use of ramps with constant time:

Two conveyor belts run with different speeds. Both of them receive the Stop-command at the same time. The belts reduce the speed in proportion to the adjusted time and come to a standstill simultaneously.

Figure 7.4.8.a Forward acceleration with constant ramp time

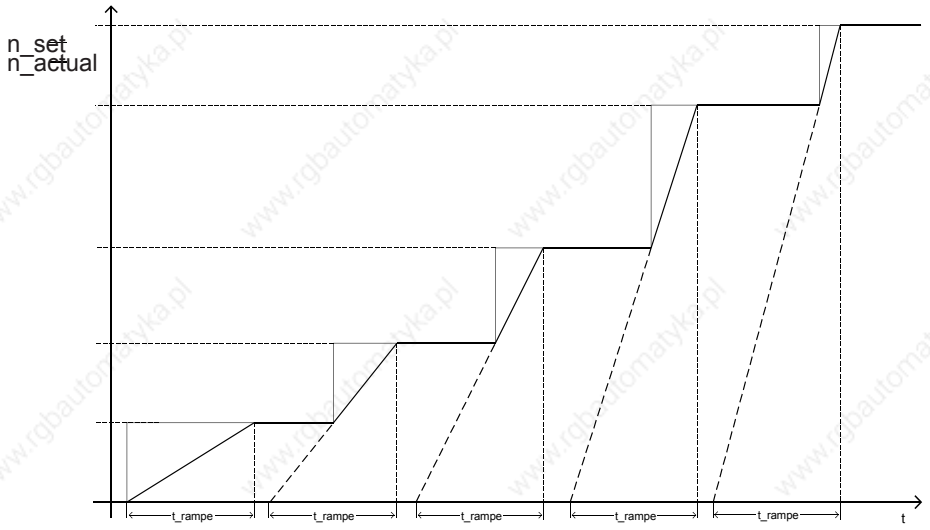

Figure 7.4.8.b Forward deceleration with constant ramp time

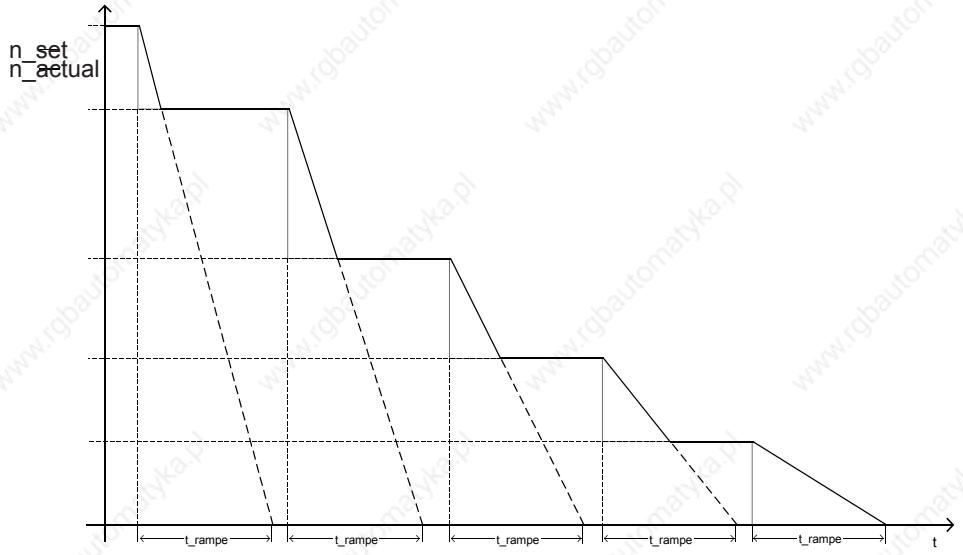

If the mode constant time is activated for a ramp, then the S-curve function is deactivated for this ramp. The ascent is limited to minimum to 1000 -1 rpm (dep.on ud.02) 4800 s.

Calculations

Fig. 7.4.8.c Calculations

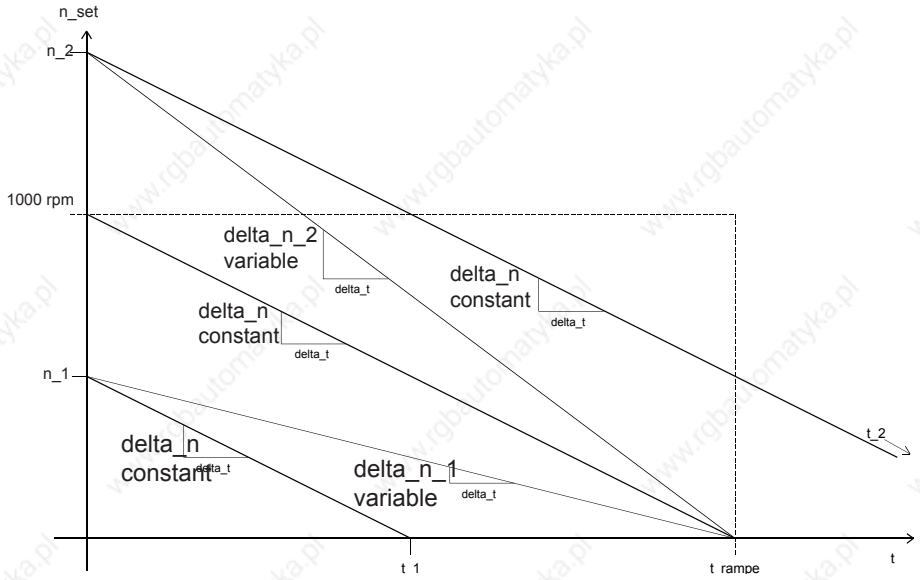

The speed change per raster scan Δ_t (step size Δ_n) for the mode constant ascent is calculated from the ramp time t_ramp and the reference speed (1000 rpm dep. on ud.2):

$$\Delta n = \frac{1000\ rpm}{t_ramp\ /\Delta t}$$

For different set values the real ramp time is calculated according to following formula:

$$t = t_ramp \times \frac{n_set}{1000\ rpm}$$

The actual step size for the mode constant time is calculated from the step size delta_n and the actual set value n_set as follows:

$$\Delta n(variable) = \Delta n \times \frac{n_set}{1000\ rpm}$$

For a simplification of the internal calculations 1024rpm (resp. 2048 rpm or 4096rpm dependent on ud.2) are used as reference speed.

$$\Delta n(variable) = \Delta n \times \frac{n_set}{1024\ rpm}$$

As a result an error of -2,4 % for the real ramp time occurs. If a certain real ramp time has to be adjusted, the desired value must be divided by 1.024. Example:

Desired ramp time = 10 s
Adjusted ramp time = 10 s / 1,024 = 9,77

1. Introduction	7.1 Operating and appliance data
2. Summary	7.2 Analog in- and outputs I
3. Hardware	7.3 Digital in- and outputs
4. Operation	7.4 Setpoint-, rotation- and ramp adjustment
5. Selection of Operating Mode	7.5 Motor data and controller adjustments of the asynchronous motor
6. Initial Start-up	7.6 Motor data and controller adjustments of the synchronous motor
7. Functions	7.7 Speed control
8. Error Assistance	7.8 Torque display and -limiting
9. Project Design	7.9 Torque control
10. Networks	7.10 Current control, -limiting and switching frequencies
11. Parameter Overview	7.11 Speed measurement
12. Annex	7.12 Positioning and synchronous control
	7.13 Protective functions
	7.14 Parameter sets
	7.15 Special functions
	7.16 CP-Parameter definition

7.5.1 Open loop operation (V/F characteristic) ..... 7.5 - 4
7.5.1.1 Rated frequency (uF.00), boost (uF.01) and delta boost (uF.04 / uF.05) ..... 7.5 - 4
7.5.1.2 Maximum voltage mode (uF.10) ..... 7.5 - 5
7.5.1.3 Additional rated point (uF.02/uF.03) ..... 7.5 - 5
7.5.1.4 Voltage stabilization (uF.09) ..... 7.5 - 6
7.5.1.5 Carrier frequency (uF.11) ..... 7.5 - 7
7.5.1.6 Energy saving mode (uF.06...08) ..... 7.5 - 7
7.5.1.7 SMM (sensorless motor management) ..... 7.5 - 8
7.5.1.7.1 Motor name plate ..... 7.5 - 8
7.5.1.7.2 Determination of the stator resistance (dr.
7.5.1.7.3 Load motor dependent para. (
7.5.1.7.4 Adjustment of
7.5 - 10
7.5.1.7.5 Improved slip compensation (cS.
7.5.1.7.6 Adjustment of the torque compen
7.5.2 Vector controlled operation ..... 7.5 - 12
7.5.2.1 Initial settings ..... 7.5 - 12
7.5.2.1.1 Motor name plate data ..... 7.5 - 12
7.5.2.1.2 Load motor dependent parameter ..... 7.5 - 12
7.5.2.1.3 Speed feedback and motor rotat
7.5.2.2 Vector controlled operation without motor model ..... 7.5 - 14
7.5.2.2.1 DASM rated speed ..... 7.5 - 15
7.5.2.2.2 Flux reduction in the field weakening range
7.5.2.2.3 Magnetisation current adaption ..... 7.5 - 15
7.5.2.3 Vector controlled operation with motor model (with encoder feedback) ..... 7.5 - 16
7.5.2.3.1 Electrical parameters (equiva
7.5.2.3.2 Zusätzliche Abgleiche ..... 7.5 - 20
7.5.2.3.3 Generally adjustments for operat
7.5.2.3.4 ...Magnetisation current adaption / v
7.5.2.4 Vector control without speed feedback (ASCL) ..... 7.5 - 23
7.5.2.4.1 ASCL / low speed operation ..... 7.5 - 23
7.5.2.4.2 Switch to consecutive motor ..... 7.5 - 26
7.5.2.4.3 Model adaption ..... 7.5 - 26
7.5.2.4.4 Speed calc. ASCL (dS.14, 15) and speed PT1-time ASCL (dS.17) ..... 7.5 - 27
7.5.2.5 Special function: Rotor adaption ..... 7.5 - 28
7.5.3 Block diagram ..... 7.5 - 29

7.5 Motor data and controller adjustments of the asynchronous motor

The asynchronous motor has two principally different modes of operation:

- V/F characteristic operation
V/F characteristic operation, with SMM (Sensorless Motor Management) for speed stabilisation and miscellaneous current limiting protective functions

- Vector controlled operation
During vector controlled operation, current and speed are checked by PI controllers.

The controlled operation can be carried out with or without motor model:

- Vector controlled operation without motor model
This mode of operation must be used if the electrical parameters (e.g., inductance) of a motor cannot be determined by automatic identification.
This operating mode always needs encoder feedback.

- Vector controlled operation with motor model
This operating mode can be used if the electrical parameters of the motor can be determined ("identified") automatically.
The advantage of this operating mode is a higher torque accuracy compared to the operation without motor model.
Particularly important for the motor model is the main inductance. This must be calibrated by a ramp-up of the motor without load torque. For the other data (stator resistance, rotor resistance, leakage inductance), values from a motor data sheet can be used alternatively.

- Vector controlled operation with motor model without encoder feedback (ASCL)
During vector controlled operation of an asynchronous motor without encoder feedback (Asynchronous Sensorless Closed Loop => ASCL), the speed is estimated with a mathematical model of the asynchronous machine.
Standard version F5A does not contain operating mode ASCL. It needs the special software F5H.

7.5.1 Open loop operation (V/F characteristic)

7.5.1.1 Rated frequency (uF.00), boost (uF.01) and delta boost (uF.04 / uF.05)

The voltage/frequency V/F characteristic is adjusted with the rated frequency (uF.00) and the Boost (uF.01). The rated frequency adjusts the frequency at which 100 % modulation depth (~input voltage) are achieved. The boost adjusts the output voltage to 0 Hz. Depending on uF.10 the modulation limit can be further increased in this stage up to 200 % (see Fig.7.5.1.1).

Figure 7.5.1.1a Rated frequency and boost

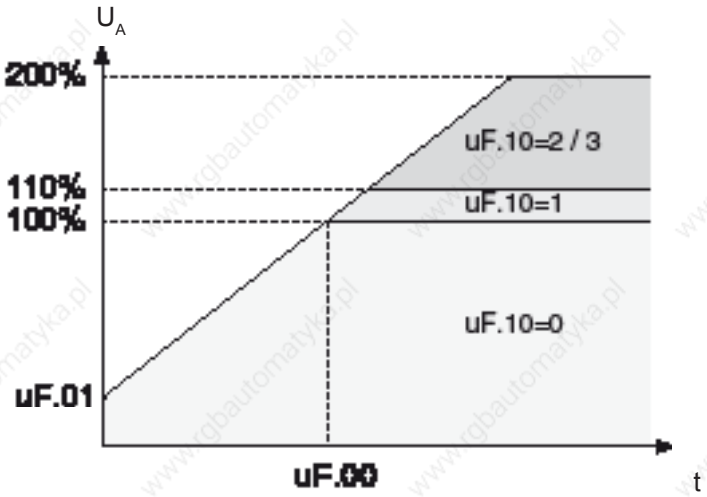

uF.00 = 0,00...400 Hz; Default = 50 Hz
uF.01 = 0,0...25,5 %; Default = LTK*

* LTK = power circuit-dependent

The Delta-Boost is a time-limited Boost used to overcome large breakaway torques. The Delta-Boost acts adding to the Boost; but the sum is limited to 25.5 %.

Figure 7.5.1.1b Delta boost

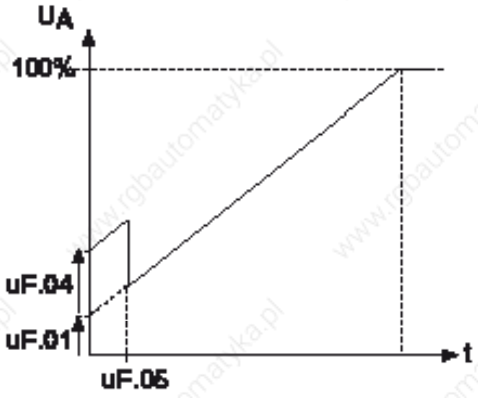

uF.04 = 0,0...25,5 %; Default = 0 %
uF.05 = 0,00...10,00 s; Default = 0 s

7.5.1.2Maximum voltage mode (uF.10)

By changing the maximal voltage mode more torque can be released free above the rated frequency through overmodulation (110% voltage). Raising the U/f-characteristic has an influence at activated energy saving function or at voltage stabilization.

uF.10 Maximum voltages mode		
Value	Modulation	Description
0	100 % V/F / 100% voltage	without overmodulation; all limitations 100% of modulation factor
1	110 % V/F / 110% voltage	with overmodulation; all limitations 110% of modulation factor
2	200 % V/F / 100% voltage	limitation of the voltage generating functions 200 %; limitation before modulator 100% of modulation factor
3	200 % V/F / 110% voltage	limitation of the voltage generating functions 200 %; 110 % output voltage

7.5.1.3Additional rated point (uF.02/uF.03)

To adapt the V/F characteristic to special conditions an additional point of support can be specified with uF.02 and uF.03. uF.02 defines the frequency and uF.03 the voltage. At uF.02 = 0 Hz the adjustment is ignored.

Figure 7.5.1.3 Additional point of support

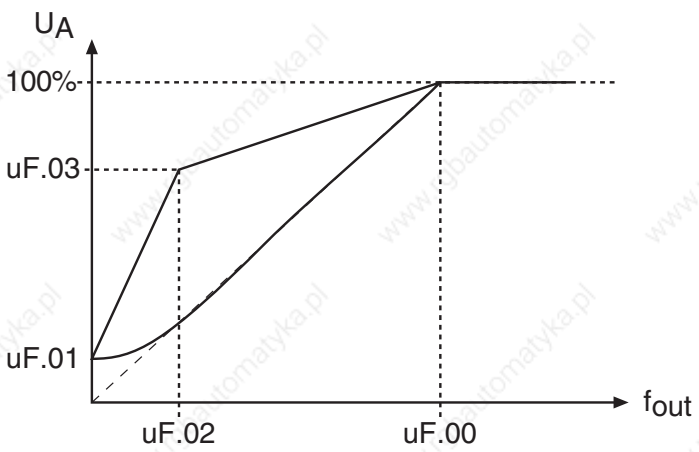

uF.02 = -1: Parabolic characteristic
0,0...400 Hz; Default = 0,0 Hz

uF.03 = 0,0...100,0 %; Default = 0,0 %

7.5.1.4Voltage stabilization (uF.09)

Due to fluctuations of the mains voltage or the load the DC-link voltage and with it the directly dependent output voltage can change. In the case of enabled voltage stabilization the fluctuations of the output voltage are compensated. I.e., 100% output voltage correspond to the value set in uF.09 , but maximally 110% · (UZK/ √ 2), depending on the setting of uf.10. This function further allows operation of motors with a low nominal voltage at the inverter.

Figure 7.5.1.4a Voltage stabilization

Example: uF.09 = 230V

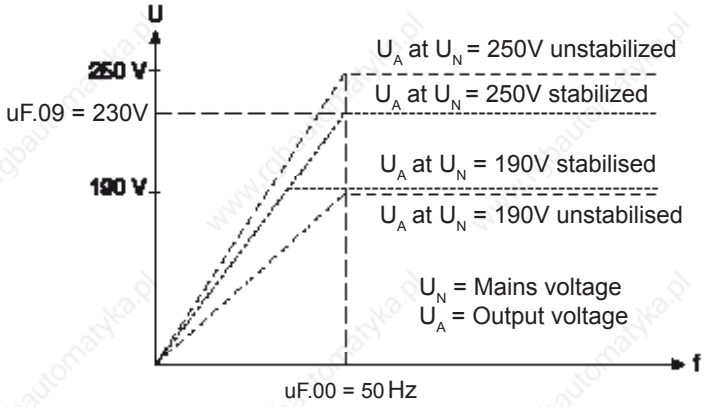

Figure 7.5.1.4b Example: Acceleration with load

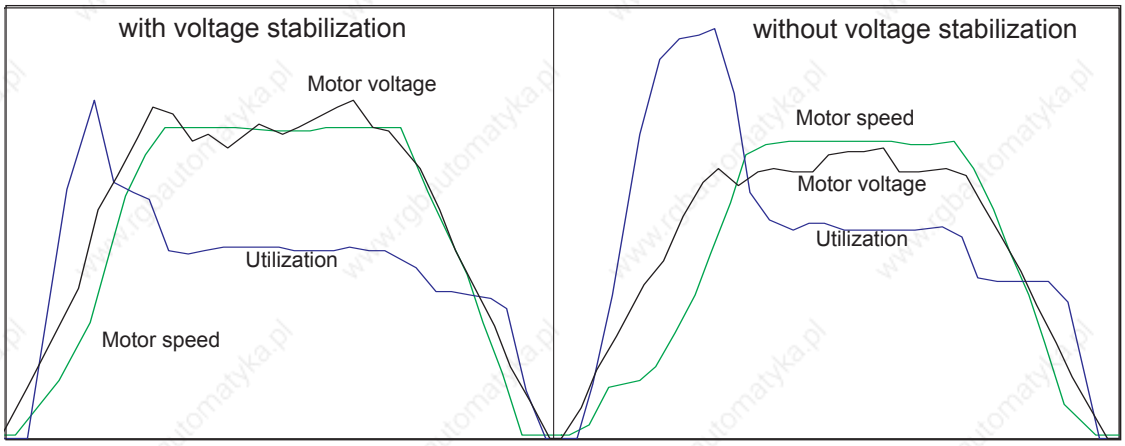

Figure 7.5.1.4c Example: Deceleration of a high-inertia drive from 80Hz

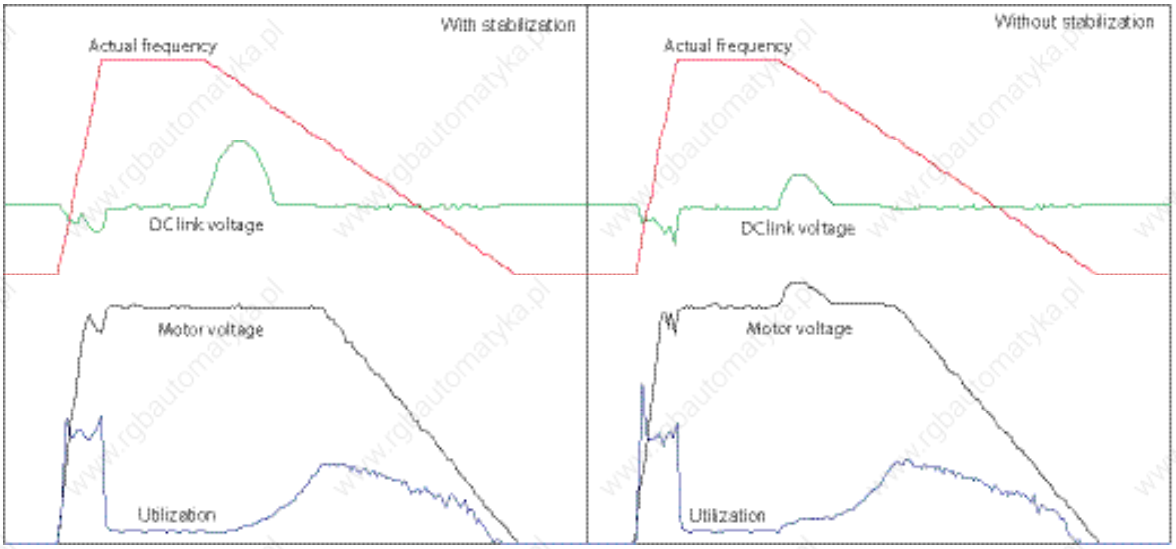

7.5.1.5 Carrier frequency (uF.11)

Information on the carrier frequencies can be found in chapter 7.10.3 "Carrier frequencies and Derating".

7.5.1.6 Energy saving mode (uF.06...08)

The energy saving mode allows the lowering or raising of the current output voltage. Corresponding to the activation conditions defined in uF.06, the voltage corresponding to the V/f characteristic is scaled by the energy saving factor (uF.07).
If torque compensation is active (s. chapter 7.5.1.7), the energy saving function is used for control optimization. The V/f characteristic will then not be affected.
The maximum output voltage cannot be higher than the input voltage, even for a factor > 100 %.
The function is used for example in cyclic executed load/no-load applications. During the no-load phase the speed is maintained, but energy is saved as a result of the voltage reduction.

uF.07 Energy saving factor
0,0…130,0 % (default 70 %)

uF.08 Energy saving input selection
0...4095 (Default 0)
For the assignment of the inputs to the parameter values, refer to chapter 7.3.1 "digital inputs".

uF.06: Energy saving mode			
Bit	Description	Value	Function
0...3	Activation	0	generally off
		1	generally active
		2	at actual value = setpoint
		3	via digital input
		4	at clockwise rotation
		5	at counter clockwise rotation
		6	at constant run clockwise
		7	at constant run counter-clockwise
		8...15	generally off
4...7	Voltage ramp	0	Standard time *
		16	time / 2
		32	time / 4
		48	time / 8
		64	time / 16

* default setting 1,6s

7.5.1.7SMM (sensorless motor management)

The SMM-function (sensorless motor management) includes the torque and slip compensation. These two functions can be activated separately. For an optimal control characteristic, the combination of both functions is required.
Setting the correct motor data is required, since they are used in calculations needed by the inverter to achieve the best possible results in the control of boost and slip.

Torque compensation

Torque compensation adapts the voltage at variable load torques in such a way that the magnetizing current is kept constant. With it a higher maximum torque is achieved at small output frequencies compared to uncompensated operation. (block diagram see chapter 7.5.3.)

7.5.1.7.1 Motor name plate

Following parameters can be taken directly from the name plate and entered:

- dr.00 DASM rated current
- dr.01 DASM rated speed
- dr.02 DASM rated voltage
- dr.03 DASM rated power
- dr.04 DASM cos (phi)
- dr.05 DASM rated frequency

!! Parameter dr.00 and dr.02 are always to be adjusted according to the used wiring (Δ / Y).
The following parameters can be taken from the corresponding data sheet or can be determined from measurements:

- dr.06 DASM stator resistance
- dr.09 breakdown factor

7.5.1.7.2 Determination of the stator resistance (dr.06)

The stator resistance can either be measured with an ohmmeter or determined automatically.
In this way the ohmic line resistance is registered simultaneously (important in the case of long incoming lines).
For the measurement with an ohmmeter, the connection between motor and inverter has to be broken. The measurement is carried out on a warm motor, between 2 phases of the motor feed cable, independent of the motor wiring (Δ / Y). For a more accurate result, all 3 values (U/V, U/W and V/W) should be measured and the values then be averaged.
The automatic determination can be carried out for each parameter set separately. Thus a parameter set can be programmed for example as "Warm-up set" for particularly critical applications.

Adhere to the following procedure:

- Input motor data of the identification plate into the parameter set which is to program.
- possibly call and activate parameter set.
- Execute the measurement dependent on the operational case in cold status respectively let the motor warm up to operating temperature.
- Preset no direction of rotation (inverter must be in status "LS")
- Activate control release
- maximum value "250000" of parameter dr.06 starts the resistance measurement.

During the determination the status display (ru.00) indicates "Cdd". Upon successful determination the motor stator resistance is entered in dr.06. If an error occurs during the determination then the error signal "E.Cdd" is output.

7.5.1.7.3 Load motor dependent para. (Fr.10), controller activation

After input of the rating plate data of a new motor or after the automatic measurement of the stator resistance, an automatic optimisation of the torque and slip compensation can be carried out with Fr.10 (s. chap. 7.5.1.7). The optimization is started by writing value "3" on Fr.10. At that the inverter must be in the status "noP" (no control release). Provided that only one motor is used, the measurement can occur with direct set programming for all parameters at once.

Fr.10: load motor dependent parameter		
Value	Function	Description
0	finished	loading completed
1	uF.09	only for closed loop operation
2	Actual DC link voltage	only for closed loop operation
3	SMM	Adjustment for torque and slip compensation

Following parameters are changed by the activation of Fr.10:

- uF.00 rated frequency = Motor rated frequency (dr.05)
- uF.01 boost = calculated value
- uF.02 additional frequency = -0,0125 Hz (parabolic characteristic)
- uF.02 additional voltages = 0,0%
- uF.09 voltage stabilization = rated motor voltage (dr.02)
- uF.16 autoboost configuration = 1 (sign-sensitive)
- uF.17 Autoboost gain = 1,2 (Default value)
- cS.00 Speed control configuration = 34 (speed control SMM + breakdown slip limit (dr.09))
- cS.01 actual source = 2 (calculated)
- cS.04 speed control limit (vvc) = 4 • nominal slip of the motor
- cS.06 KP speed = 50
- cS.09 KI speed = 500

The adaption should cover approx. 90 % of the applications. For an application-specific adjustment a manual fine adjustment can now still be carried out for an individual case.

7.5.1.7.4 Adjustment of the slip compensation (cS.00, cS.01, cS.04, cS.06, cS.09)

The integrated speed controller is used at cS.00 = "2" for the slip compensation.The rotor speed calculated from the motor model is selected as the actual controller value by cS.01 = 2.
With bits 3-6 in cS.00, the slip compensation can be configured.

cS.00: Speed control configuration			
Bit	Meaning	Value	Explanation
3	Control mode	0	Change of direction of rotation via the controller not possible
		8	Change of direction of rotation via the controller possible
4		0	no controller intervention for controller setpoint = 0 min^{-1}
		16	controller intervention even for controller setpoint = 0 min^{-1}
5		0	no breakdown slip limit
		32	breakdown slip limit (Nennschlupf x dr.09)
6		0	Default slip compensation
		64	Improved slip compensation (cS.03)

cs.01: Actual source	
Value	Explanation
0	Encoder interface channel 1, only reasonable for closed-loop operation
1	Encoder interface channel 2, only reasonable for closed-loop operation
2	calculated rotor speed

cS.04 Speed control limit (vvc)

0…4000 rpm x resolution factor (dependent on ud.02)
Default: 750 rpm x resolution factor
The speed limit determines the maximum controller intervention.

cS.06 KP speed, cs.09 KI speed

0…32767, default 300(KP), 100(KI)
Proportionality and integration factor, respectively, of the speed controller.
ATTENTION! These parameters must be adjusted before activation of the slip compensation. The default values are optimised for closed-loop operation.
This adaption is carried out with the motor adaption (see chapter 7.5.1.7.3), and only a fine adjustment is necessary.

7.5.1.7.5 Improved slip compensation (cS.00 Bit 6 = 64, cS.03)

During the standard slip compensation, the slip is calculated proportionately from the effective current. This calculation becomes imprecise above the nominal setpoint and in generatoric operation.
For the improved slip compensation, the slip calculation during motor operation above the nominal setpoint is approximated to the real M/n-characteristic with a parabolic function. Greater inaccuracies will then occur only above twice the rated torque.
During generatoric operation, the linear dependency is preserved. The steepness of the characteristic can be adjusted with cS.03.

7.5.1.7.6 Adjustment of the torque compensation (uF.16, uF.17)

With uF.16 and uF.17 the torque compensation is activated and configured.
Magnetising current setpoint and actual value are calculated in the motor model.

ATTENTION! Through overcompensation increased motor currents can occur particularly with small frequencies.

uF.16: Autoboost configuration	
Value	Meaning
0	Torque compensation off
1	Torque compensation acts motoric and generatoric
2	Torque compensation works only in the motoric operation; resulting in a smoother run in the generatoric operation.
3	Torque compensation in motoric operation; overcompensation in the generatoric operation; resulting in a higher maximum torque and increased current in the generatoric operation compared to 1 and 2; because of the higher motor-own losses a braking resistor is only necessary at higher energy recovery compared to 0, 1 and 2.

uF.17 Autoboost gain

0,00…2,50 (default 1,20)
With the energy saving function (uF.06...uF.08, s. chapter 7.5.1.7.5), the magnetizing current setpoint can be adjusted to the application. If a drive operates in the partial load range for a long period, decreasing the energy saving factor can reduce motor warming and energy consumption.

7.5.2 Vector controlled operation

7.5.2.1Initial settings

Vector controlled operation is activated by inputting the values 4, 5 or 6 into the category "control mode" of the parameter "speed control configuration" (cS.00).

cS.00: Speed control configuration			
Bit	Meaning	Value	Explanation
0...2	Control mode	0: off	
		1..3	reserved for V/F open loop operation
		4: Speed control	speed- and current-controlled operation with or without speed feedback
		5: Torque control	torque-controlled operation / see chapter 7.9
		6: torque value (F5M/S)	
		7: off	

Torque-controlled operation (cS.00 = 5 or 6) is a special form described in chapter 7.9.

The following adjustments are required in speed-controlled operation for all modes (with / without encoder and with / without motor model, respectively):

7.5.2.1.1 Motor name plate data

Input of the motor rating plate data is at the beginning of each start-up:

- dr.00 DASM rated current
- dr.01 DASM rated speed
- dr.02 DASM rated voltage
- dr.03 DASM rated power
- dr.04 DASM cos(phi)
- dr.05 DASM rated frequency

7.5.2.1.2 Load motor dependent parameter

After inputting this data, the operator must switch to closed-loop operation (cS.00 = 4) and input Fr.10 = 1 or 2 (explanation see below) once.

Fr.10 Load mot. dependent parameter	
Value	Function
1:uF.09 (F5-M/ S)	precharging dependent on the voltage class of the inverter, and the value of uf.09, respectively
2: act. DC link voltage (F5-M/ S)	precharging dependent on the current DC link voltage of the inverter
3: Start motor adaption (F5-G)	only for open loop V/F characteristic operation

The inverter must have status "noP", i.e., the input "control release" (ST) may not be set.
Thus the following parameter are pre-charged dependent on the motor and inverter data:

Definition of the limiting characteristic:
- dr.16 DASM max. torque corner speed
- dr.17 DASM speed for max. torque
- dr.18 DASM field weakening speed

Definition of magnetisation:
- dr.19 Flux adaption factor
- dr.20 Field weakening curve

Current controller
- dS.00 KP current
- dS.01 KI current

Torque limits:
- cS.19 Abs. torque ref
- cS.20...cS.23 Torque limit (clockwise rotation motor operation, counter clockwise rotation motor operation, clockwise rotation generator operation, counter clockwise rotation generator operation)
- Pn.61 Quick stop torque limit

Flux controller:
- dS.11 KP flux
- dS.12 KI flux
- dS.13 Magnetising current limit

Inertia:
- cS.25 Inertia (kg x cm^2)

Speed controller (preloaded only if automatic speed controller setting is activated by cS.26 ≠ 0):
- cS.06 KP speed
- cS.09 KI speed

only for ASCL (F5-H):
- dS.14 KP speed calculation ASCL
- dS.15 KI speed calculation ASCL
- dS.19 Limit uf-control dec ASCL

Some of these parameters (e.g., the limiting characteristic) depend upon the available voltage.
During vector controlled operation, the voltage stabilization generally should be "off". The software-integrated current controllers control the voltages and a simultaneous intervention of the voltage stabilization increases the system´s vibrational tendencies.

uF.09 Voltage stabilization	
Value	Function
1120	off

With Fr.10 = 1, precharging occurs dependent on the voltage class of the inverter (400V or 230V)
The current DC link voltage of the frequency inverter, which is proportional to the supply input voltage, is considered for the calculations at Fr.10 = 2.
If the parameter "voltage stabilization" (uF.09) is not set to the default value "1120: off", then the value set in in uF.09 is taken as the reference voltage for the calculations for settings Fr.10 = 1 or 2.
If the drive is to be operated at a different voltage then during initial start-up, proceed as follows:

In parameter uF.09, enter the nominal voltage to be used later, activate Fr.10 = 1 and reset parameter uF.09 to "off".

Attention:
After completion of a possible "fine tuning", i.e., the manual adjustment of controller parameters, torque limits, etc., parameter Fr.10 may not be activated anymore. Otherwise, the manually adjusted parameters will be overwritten by the calculated values!

7.5.2.1.3 Speed feedback and motor rotation direction selection

The actual value source for the speed must be selected in parameter cS.01.
Possible values for drives with tachometer generator are 0 (speed measurement via encoder interface channel 1) or 1 (speed measurement via encoder interface channel 2).
Description of the correct parameter setting of the encoder interfaces is made in chapter 7.11 "speed measurement".
If operation without tachometer generator is desired, cS.01 = 2 (calculated actual value) must be selected. This setting is possible only for open loop V/F characteristic operation (for software type F5-A) or for control via motor model (for software type F5-H and F5-E, respectively).

cS.01 Actual source			
Bit	Description	Value	Function
0...1	Actual value source	0: Channel 1	Control to measured speed (via encoder interface 1)
		1: Channel 2	Control to measured speed (via encoder interface 2)
		2: Calculated actual value	Control to calculated speed (from motor model)
2	System inversion	0: off	Activates the system inversion
		4: an	

With activation of the system inversion it is reached that the motor with selected rotation direction "clockwise" (e.g. by setpoint- or rotation setting) has the physically direction "counter clockwise" respectively at setting "counter clockwise" the physical rotation "clockwise". Precondition is a correct wiring of motor and speed feedback (if available).
One possible application of this function is, e.g., the deployment of 2 drive units, where facing motors drive the same shaft. If system inversion is activated for a drive, the same setpoint can be set for both via a control, even if one motor rotates clockwise and the other counter clockwise.
For applications with encoder feedback, the same function can be activated by switching on system inversion in parameter Ec.06 (see chapter 7.11).

7.5.2.2 Vector controlled operation without motor model

For motors that don´t allow identification of the motor data (e.g., no-load operation of the motor not realisable), vector controlled operation without motor model must be selected.
In vector controlled operation without motor model, the parameters dr.06...dr.10 have no function. If the drive is to be operated with motor model, chapter 7.5.2.2 can be skipped.

7.5.2.2.1 DASM rated speed

In vector controlled operation without motor model, the slip is affected significantly by the rated speed. If the drive requires too much current for a certain load, or if is can be seen that the output voltage at high load gets too small, an incorrect (too low) rated speed may be the cause.
In this case, the rated speed must be adjusted in small increments until the optimum is found.

7.5.2.2.2 Flux reduction in the field weakening range

Since the motor voltage is proportional to frequency * flux, the flux must be lowered according to a 1/x function above the rated point (maximum voltages reached) to keep the voltage constant.
In the base speed range of the motor, the maximum torque is limited by the current the inverter is able to supply. In the field weakening range, the achievable torque is additionally limited by the voltage.
Since the motor parameters, like main inductance, change in the field weakening range, the flux does not follow the desired 1/x-characteristic during control without motor model in the field weakening range.
This change in the main inductance can partially be compensated for with the default setting of the amplification factor field weakening (dr.20) of 1.2 instead of 1.

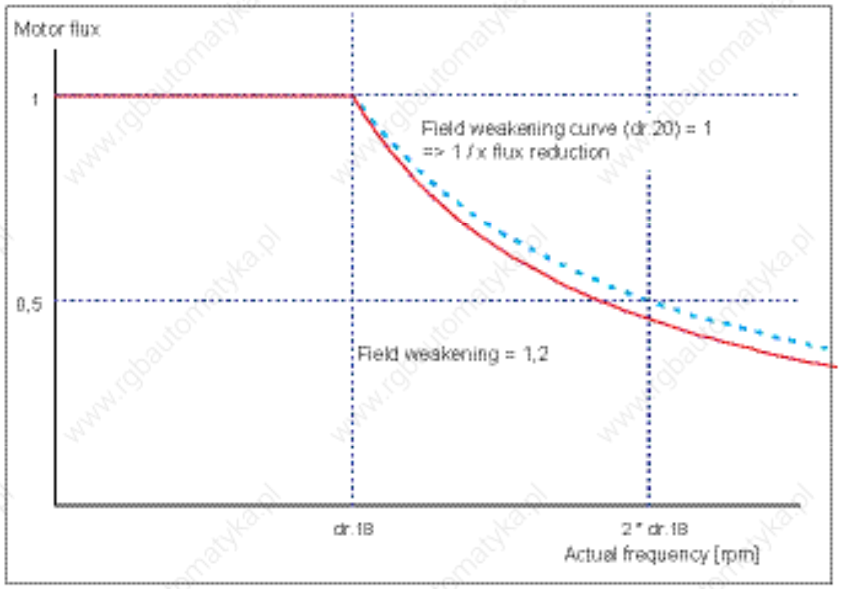

For an optimum motor adaption, this factor may have to be modified .
The flux reduction is well parametrised, if for every operating point a voltage reserve of approx. 3...10% is available. I.e., the modulation factor (ru.42) should be (dr.18) ca. 90...97% under nominal load at the field weakening speed.

7.5.2.2.3 Magnetisation current adaption

For large motors, the automatic calculation of the magnetising current occasionally returns values that are too large. This value can be reduced by adjusting the parameter "flux adaption factor" (dr.19).
Whether the automatically calculated magnetising current is too large, can be tested by accelerating the drive to the field weakening speed (dr.18) in vector controlled operation with no load. At this speed, the average value of the modulation factor should not exceed 90%. If this value is exceeded, the factor "flux adaption factor" (dr.19) should be reduced.

7.5.2.3 Vector controlled operation with motor model (with encoder feedback)

The vector controlled operation with motor model is possible only if the electrical characteristic data of a motor are known. For this operating mode, the motor model calculation must be activated in parameter dS.04.

dS.04: Flux / rotor adaption mode			
Bit	Meaning	Value	Explanation
0	Motor model (ASM)	0: off	Activation of the motor model calculation.
		1: on	

7.5.2.3.1 Electrical parameters (equivalent circuit data) of the motor

For the vector controlled operation with motor model, the electrical characteristic data of the motor must be known.
The parameters TPIM stator resistance (dr.06), TPIM leakage inductance (dr.07) and TPIM rotor resistance (dr.08) can be taken from a motor data sheet or can be automatically determined by the KEB COMBIVERT using the motor identification. For motors with high power, the resistances are very small (a few mOhm). This can lead to error in the automatically identification. For these motor, it may be sensible to use the value from the motor data sheet for dr.08.
Due to saturation, the parameter dr.10 "TPIM main inductivity" depends on the chosen magnetising current. This is defined by the rated motor current (dr.00), cos(phi) (dr.04) and factor flux adaption (dr.19). Since the value of the main inductance given in the motor data sheet possibly applies for a different current, this parameter (dr.10) must always be identified, to ascertain the correct value of the current magnetising current.

7.5.2.3.1.1 Identification / general

The required equivalent circuit data for the motor model can be determined by the KEB COMBIVERT itself. First the motor data must be entered and the motor adaption must be executed according to chapters 7.6.1.

There are two possibilities to start the identification:

- Writing of parameter dr.48 in inverter state "stop (mod. off)", measurement is starting automatically.
- Writing of parameter dr.48 in inverter state "nop" with subsequent control release.

Parameter dr.48 cannot be written in other operating conditions.

The measured values can be invalid in case of strong overdimensioning of the inverter. The rated current of the motor should be at least 1/3 of the maximum short time current limit. The short time current limit is determined by the overload characteristics and can be taken from the power circuit manual or parameter In.18 (hardware current).

The direction of rotation during identification of the main inductance is always "clockwise rotation"!

During the calibration, the value of "82: calculated drive data / Cdd" is displayed in the inverter status ru.00. After successful completion of the calibration, the display is ru.00 = "127: final calculated drive data / Cddr".
If the measurement is interrupted with an error, ru.00 = 60ERROR! drive data/ E.Cdd" is displayed.

No correct operation can be ensured in case of an abort.
The current state of the identification is displayed in parameter dr.62 "state motor ident." The control release must be switched off in order to leave the identification mode.
Parameter dr.48 must be written again in order to start a new measurement.

If the internal brake handling is used in the application, then it must be deactivated for the identification. For safety reasons the output signal "brake release" is not set during measurement, since the motor cannot generate a defined torque in this time. Stator resistance, rotor resistance and leakage inductance can be measured also at engaged brake.
For the identification of the main inductance, the drive must be decoupled from the load, and the output switch condition associated with the break control must be set to the value "1" (= always active), setting the brake permanently open.

7.5.2.3.1.2 Automatic mode

For the identification of the parameters, automatic mode should generally be used.
Automatic mode is the simplest method of parameter identification.
Measurement of the dead time compensation characteristics, as well as the stator- and rotor resistance and the leakage inductance is done in standstill. A small rotation of the motor caused by the test signals is possible.

dr.48: Motor identification			
Bit	Description	Value	Function
0...4	Measurement	0: off	
		7: Auto ident. without main inductance (ASM) / EMK (SM) !without rotation!	automatic measurement of the dead time characteristic and of all equivalent circuit data - with the exception of the main inductance. This measurement is carried out with the motor stopped, but a rotation of the motor due to the test signals is possible.
		8: complete Auto Identification !with rotation!	**!Attention: requires motor revolution in no-load operation!** automatic measurement of the dead time characteristic and of all equivalent circuit data - including main inductance. The motor accelerates to "speed for max. torque" (dr.17)

It is necessary for the identification of the main inductance, that the motor accelerates to the speed for maximum torque (dr.17) and then it operates in no-load operation.
There is a special ramp "Lh. ident. acc/dec time" (dr.49) for identification.
This ramp applies during calibration of the main inductance for the acceleration to dr.17 and the deceleration at the end of the identification.
The speed controller must be sensibly parametrised (choose small Ki), the drive may not vibrate during the identification.
The following chapter, "single identification", contains more detailed information with respect to the separate steps of the identification and can be skipped if automatic mode is chosen. In the chapter after the next, "additional trimmings", two further identifications are described which are not part of the automatic mode and that are unnecessary in many cases.
The explanations of the parameters required to be set continues in chapter 7.5.2.3.3 "generally required settings for operation with motor model".

7.5.2.3.1.3 Single identification

Single identifications should not be used for the first measurement of the motor parameters, since invalid measuring results can occur in case of a wrong identification sequence or omitting of individual points.
Single identification can always be used if a complete automatic measurement was executed and only individual parameters shall be identified. For example this can be a resistance measurement in warm condition or a new measurement of main inductance after changing parameter dr.19 "flux adaption factor".

dr.48: Motor identification			
Bit	Description	Value	Function
0...4	Measurement	0: off	
		1: Calculation of the main inductance (ASM)/ EMK (SM)*	Precharging of the current controller parameters and main inductance from rating plate data
		2: Leakage (ASM)/ winding inductance (SM)*	Measurement of the leakage inductance
		3: Stator resistance Rs*	Measurement of the stator resistance
		4: Rotor resistance Rr *	Measurement of the rotor resistance
		5: Model-/controller parameterization *	Based on the equivalent circuit data, the model parameters and the setting of the controller are determined in the dS-parameters (current-, flux-, and speed calculation controller)
		6: Main inductance (ASM)/ EMK (SM) !with rotation! *	**!Attention: requires motor revolution in no-load operation!** Measurement of the main inductance at "speed for max. torque" (dr.17)
		7: Auto ident. without main inductance (ASM) / EMK (SM) !without rotation!	automatic measurement of the dead time characteristic and of all equivalent circuit data - with the exception of the main inductance. This measurement is carried out with the motor stopped, but a rotation of the motor due to the test signals is possible.
		8: Complete Auto Identification !with rotation!	**!Attention: Requires motor revolution in no-load operation!** automatic measurement of the dead time characteristic and of all equivalent circuit data - including main inductance. The motor accelerates to "speed for max. torque" (dr.17)
		9: Dead time detection 2 kHz *	Measurement of dead time compensation characteristics for different switching frequencies
		10: Dead time detection 4kHz *	
		11: Dead time detection 8kHz *	
		12: reserved	
		13: Dead time detection 16 kHz *	

further on next page

dr.48: Motor identification			
Bit	Description	Value	Function
5...7	Output frequency	0: 1000Hz	The measuring frequency is changed independently during measurement. Therefore, leave the value at 0: 1000Hz! Only changeable for test and diagnostics purposes.
		32: 500Hz	
		64: 250Hz	
		96: 125Hz	
		128: 62,5Hz	
		160: 32,25Hz	
		192: 15,625Hz	
		224: 7,8125Hz	

* at dr.48 = 8 auto-identification

Pre-adjustment of the main inductance (dr.48 = 1)

With dr.48 = 1 (calculation of the main inductance (ASM) / EMC(SM)), a starting value for the main inductance is calculated from the motor label data.

Leakage inductance measurement (dr.48 = 2)

Measurement of the leakage inductance (dr.07) occurs at standstill with a test signal. The frequency of the measurement signal is adjustable via bits 5... 7 in parameter dr.48.
Since the inverter determines automatically the ideal measuring frequency, value 0 should be always selected for bits 5...7.

Stator resistance measurement (dr.48 = 3)

Measurement of the stator resistance is done with DC current.

Rotor resistance measurement (dr.48 = 4)

Measurement of the rotor resistance (dr.08) occurs at standstill with a test signal. The frequency of the measurement signal is adjustable via bits 5... 7 in parameter dr.48.
Since the inverter determines automatically the ideal measuring frequency, value 0 should be always selected for bits 5...7.
Since the measurement frequency occasionally has to be reduced to 7.8125 Hz for better measurement accuracy, the motor may rotate.

Model / controller parameterization (dr.48 = 5)

With dr.48 = 5, the internal model parameters as well as current-, flux- and speed calculation controller parameters are calculated from the equivalent circuit data. If a mode other than automatic is used for the identification, this action should be taken after the measurement of the leakage inductance, rotor and stator resistance, but before the identification of the main inductance, so that the controllers for the speed ramp-up are parametrised correctly.

Main inductance (ASM) / EMK (SM) with rotation (dr.48 = 6)

It is necessary for the identification of the main inductance that the motor accelerates to the speed for maximum torque (dr.17). The speed controller must be sensibly parametrised (choose small Ki), the drive may not vibrate during the identification.
The motor must be able to rotate in no-load operation. After the main inductance has been identified, the drive stops automatically.
There is a special ramp "Lh. ident. acc/dec time" (dr.49) for identification. This ramp applies for acceleration at the beginning and deceleration at the end of the identification.

Dead time detection (dr.48 = 9...13)

The dead time detection only works as single identification if the stator resistance is correct preset.
The measured dead time values can be read out via In.39 and In.40.
The dead time compensation characteristic is not contained in the data protection by reading of a complete list, because it is specific for the respective inverter.
The calibrated dead time compensation characteristics are in force if uF.18 = 3 is set.

7.5.2.3.2 Zusätzliche Abgleiche

dr.48 Motor identification			
Bit	Description	Value	Function
0...4	Measurement	0: off	Detection of the no-load torque at different switching frequencies. During operation this torque is subtracted from torque display ru.12.
		14: Torque detection 2 kHz	
		15: Torque detection 4 kHz	
		16: Torque detection 8 kHz	
		17: reserved	
		18: Torque detection 16 kHz	
		19: Current offset detection	Detection of the current offset in phase U and V
		20: Voltage pulse	Only for synchronous motor

7.5.2.3.2.1 Torque detection (dr.48 = 14...18) / only for F5H-M

In applications with particularly high demands on accuracy of the torque display, this can be calibrated.
As a standard, the torque display does not show a value of 0 in encoderless operation during no-load operation. The reason for this is switching frequency-dependent losses in the inverter and friction losses due to the application.
If the torque display has to be corrected for this offset, the torque offset of the whole drive can be calibrated with dr.48 = 14...18 for the various switching frequencies.
Thereby the drive accelerates in stepwise with the adjusted ramp in dr.49 to maximum 1,3-fold synchronous speed. The speed limits set in the oP-parameters remain operative during this phase.
The calibrated no-load torque is stored as correction characteristic. During operation, the display of the actual torque in ru.12 is corrected using this characteristic.
The torque offset-characteristic can be read with parameter dr.58/ dr.59.
The characteristic is not part of the data backup created by read out of a complete list.
This should be executed only if the application really requires increased torque accuracy. Since the trimming values are not contained in the complete list, porting the data to a different inverter is labour-intensive.

7.5.2.3.2.2 Current offset detection (dr.48 = 19)

As a standard, the current offset from the inverter is permanently ascertained and balanced, as long as the modulation is switched off. Therefore, the current offset-detection via dr.48 is usually not required.
In some cases, one achieves more accurate current offset values if one carries out the trimming with current in the motor.
If dr.48 = 19 is selected, the inverter provides a test signal to the motor and so carries out the trimming once. A disadvantage of this current offset detection is that it is carried out only once and therefore temperature and ageing effects are not taken into account.
To preserve the identified offset, automatic measurement is deactivated with dr.48 = 19.
ATTENTION! Since the automatic measurement can only be reactivated by the KEB service personnel, the current offset detection should preferably be carried out only in consultation with KEB.

7.5.2.3.3 Generally adjustments for operation with motor model

The drive is only ready for operation after switching the modulation if the flux is build up. If one starts earlier, the drive can display undefined behaviours (erroneous torque display, too high currents, poorer controller behaviour).

dS.04 : Flux / rotor adaption mode			
Bit	Meaning	Value	Explanation
7	Wait for magnetisation (ASM)	0: off 128: on	The speed setpoint (ru.01) is applied only after the flux reduction, i.e., only then will ramps and speed controller become active

Bit 7 in dS.04 ("Wait for magnetisation (ASM)") must therefore always be set (value 128). Thus the setpoint setting is only released if the flux is build up to 95%.

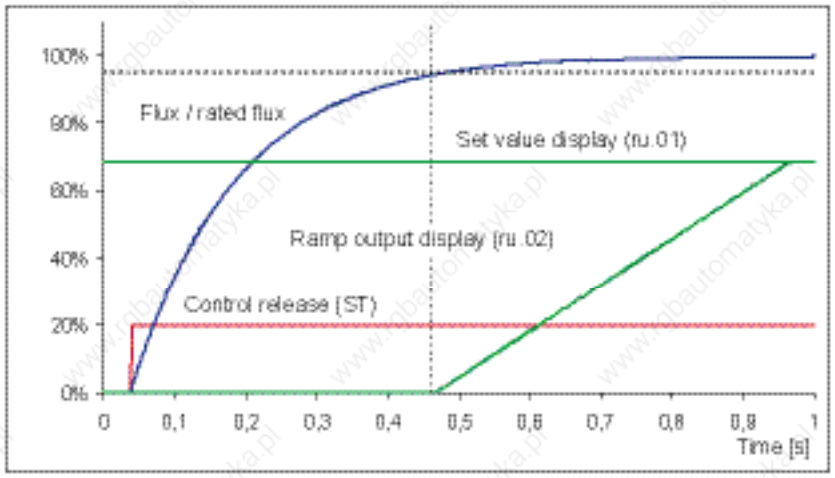

The flux controller must be activated for the operation with motor model.
The parametrisation of the controller (KP flux / dS.11, KI flux / dS.12, magnetising current limit/ dS.13) is carried out automatically by Fr.10 and after the motor identification (dr.48).

dS.04: Flux / rotor adaption mode			
Bit	Meaning	Value	Explanation
5,6	Flux control (ASM)	0: off	Flux controller always off (these adjustment is not allowed for the operation with motor model)
		32: on	Flux controller always on (must be used for control with motor model and encoder feedback)
		64: on, n^3/dr.17^3	Flux controller active, speed-dependent limit of the controller (at speed 0 = 0 / at speed dr.17 = dS.13)
		96: on, start a. n^3/dr.17^3	As value 64, exception: start of the drive: here, (despite speed 0) the limit of the flux controller is set to the value dS.13 for the magnetisation.

During operation with speed feedback, the flux controller must be activated over the whole speed range, i.e., the value 32 must be chosen in dS.04 in the item "flux control" .
During operation without speed feedback, the value 64 or 96 should be selected.
With Fr.10, the parameter dS.13 "Magnetising current limit" is set to half the rated motor current. If the flux build-up time is to be shortened or if particularly high demands are made on the dynamics in the field weakening range, this value can be changed to the rated motor current (dr.00).
The inverter can only provide the standstill current at speed 0. Error OL2 is released shortly if the current is higher. Thereby this can lead to problems during magnetizing at some motor/inverter combinations. In these cases, the setting dS.04 Bit 5, 6 = 64 "flux controller not active during boot" must be chosen.

7.5.2.3.3.1 Dead time compensation

The drive has also measured the dead time compensation characteristic during automatic identification. The calibrated characteristic must be activated for the control with motor model by the setting "dead time compensation mode" (uF.18) = 3: "automatic".

uF.18: Dead time compensation mode	
Value	Explanation
0: off	Deactivates the dead time compensation
1: linear	Default setting for u/F characteristics open loop operation
2: e function	Only required for special applications
3: automatically	Activation of the identified characteristic. Shall always be used at control of asynchronous motors with motor model

Further available kinds of the dead time compensation are only required for special applications (applications with high frequencies, some special motors) or in other operating modes (e.g. V/f characteristics controlled).
The dead time compensation can be switched off via a digital input. The digital input is selected with parameter uF.21. This disconnection is only required for special applications with high frequency.

7.5.2.3.4 Magnetisation current adaption / with motor model

For large motors, the automatic calculation of the magnetising current occasionally returns values that are too large. This way, the dynamic operation in the field weakening range may worsen.
Whether the automatically calculated magnetising current is too large, can be tested by accelerating the drive to the field weakening speed (dr.18) with no load. At this speed, the voltage limit (modulation factor 100%) should not be reached yet. Otherwise, the "factor flux adaption" (dr.19) should be reduced.
Since a new identification of the main inductance must be carried out (dr.48 = 6) after the modification of these parameter, the "flux adaption factor" (dr.19) should be reduced until the modulation factor is approx. 90 - 95%. Subsequently, a new identification of the main inductance must be carried out (dr.48 = 6) and, with dr.48 = 5, the controller must be adapted to the new main inductance.
The new "flux adaption factor" must then be checked with a new ramp-up.
Attention: If the factor is reduced too much, the available voltage will not be fully exploited anymore (modulation grade ru.42 even for high speed and a load always smaller than 95%), and the motor current increases!

7.5.2.4 Vector control without speed feedback (ASCL)

This chapter must be read only if an asynchronous motor without speed feedback is to be operated. Since the speed can be calculated only with the aid of a mathematical model, this operating mode may only be used with the following limitations:

- Vector control around frequency = 0 is not possible.
- During operation in the low speed range, the motor model may become unstable, this range, therefore, must always be left quickly.
- No safety functions may be derived from the calculated speed

This operating mode is only available through auxilliary software F5H-M.
For the motor model, there are some additional parameter for adapting the encoderless vector control to the application.
Operation without speed feedback is activated by cS.01 = 2 "calculated actual value".
In parameter cS.00 "controller configuration", the value 4 "speed control" or 5 and 6, "torque control", respectively, must be set.

7.5.2.4.1 ASCL / low speed operation

Operation at small speed is a critical range which should be passed very fast.
The size of this range cannot be indicated universally valid. It is strongly dependent on the used motors.
The usable speed range for standard-asynchronous motors is approx.:

Power	mot. operation	gen. operation
2,2 kW	1 : 50	1 : 20
85 kW	1 : 100	1 : 50

Start-up speed and start-up time (dS.21 / dS.22)

In order to leave the critical range of small speed at starting and stopping there is an additional ramp for this range.
The ramps is defined by parameter dS.21 "start-up speed" and dS.22 "start-up time".

The parameter dS.21 indicates the speed range for which the start ramp applies. dS.22 indicates the acceleration-/ deceleration time.

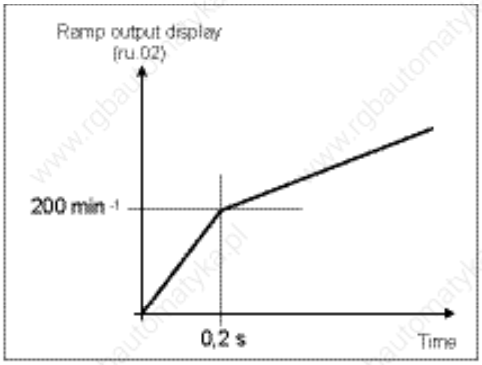

Example:

ud.02 = 4 (4000 rpm mode)
dS.21 = 200 rpm
dS.22 = 1s

ASCL model shutoff during deceleration (dS.19, dS.20)

If the drive is to be stopped, the critical range of low frequencies must be traversed again.
The additional problem of the drive not stopping completely, but instead running permanently at a low frequency with a very high current occurs here, leading to a miscalculation of the speed.

Under the following conditions, therefore, the mode is switched from vector controlled to current regulated, frequency controlled operation:
- Drive decelerates
- the estimated output frequency is smaller than dS.19 ("limit uf-control dec ASCL")

The drive then shows the following behaviour:
- the output frequency is ramped down according to the adjusted deceleration ramp
- the current is held constant from the switching time on

The parameter dS.19 is loaded with a default value by the identification or by Fr.10 "Load mot. dependent parameter". Should problems still occur during deceleration, the value for dS.19 can be increased.

If the drive is stopped by switching off the rotation direction release, the modulation is switched off after reaching output frequency 0.

If the drive is stopped by setting the setpoint to 0, the current is reduced to the magnetising current after reaching the output frequency = 0.
At this point, the real speed of the motor is not yet 0 in some cases.
Therefore, the time for which the higher constant current is set can be increased with parameter dS.20 "delay time uf-control".

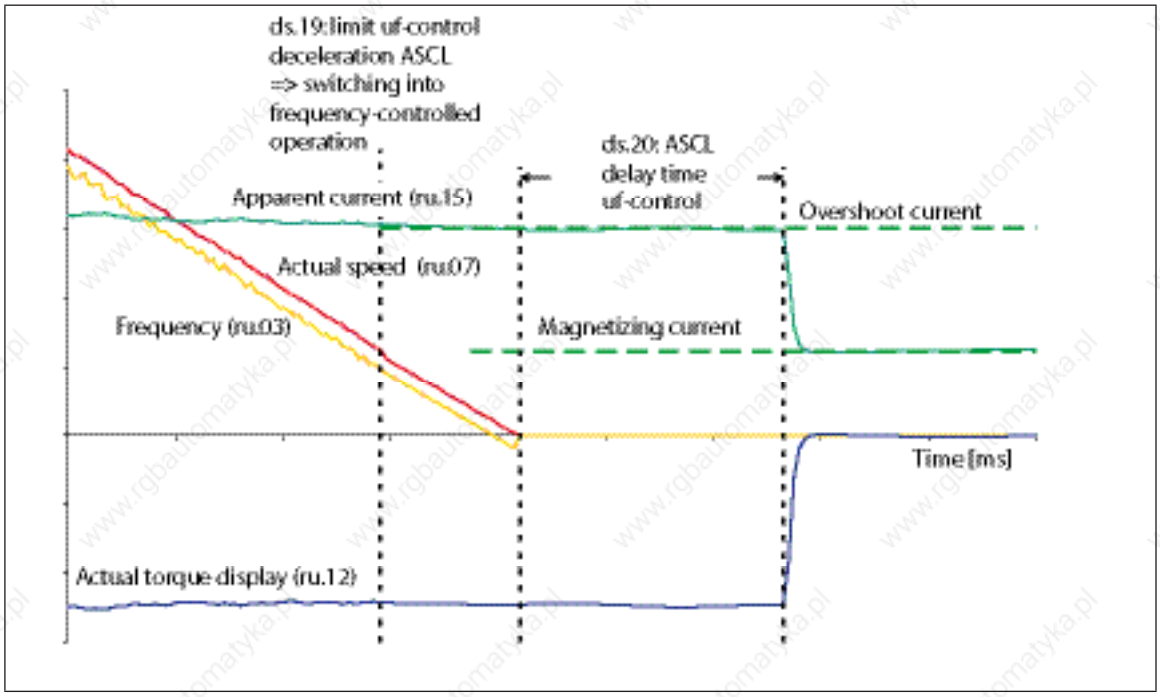

Attention: The actual torque display (ru.12) is invalid after switching to the frequency controlled operation!

ASCL / reversing

If one wants to run the drive through zero speed without stopping to change (reverse) the direction of rotation, switching to the frequency controlled mode can be disruptive.
Therefore, this switching can be deactivated by setting bit 2 in parameter "function mode" (dS.18).

dS.18 Function mode			
Bit	Meaning	Value	Explanation
2	Model switch-off	0: activated 4: deactivated	Deactivate switching to the frequency driven, current-controlled operation

To utilise the open loop mode for stopping, but, on the other hand, avoid negative effects during reversal, the inverter must be programmed so that stopping of the motor always follows in the same set.
Then, one can let the switch to the open loop mode be activated for this set (the stop-set) (dS.18 = 0), and avoid interfering effects during reversal for other sets with dS.18 = 4.
The, it is only necessary to ascertain that the range of low frequencies is traversed quickly.
This can be achieved by suitably setting parameter "start-up time" (dS.22) and parameter "start-up speed" (dS.21), which apply to acceleration as well as deceleration.

ASCL / constant run with low speeds

Speed setpoints lying within the critical range must be avoided.
To avoid continuous operation in low frequency range, the minimum setpoint (oP.06 / oP.07) should be set to speeds outside the critical range.
Alternatively, too-small setpoints may also be masked by parameter oP.65...oP.68 (blocked setpoints).

7.5.2.4.2 Switch to consecutive motor

If the motor is still rotating during addition of the modulation (e.g., "rundown" after malfunction), the calculation of the actual speed from the motor model can become unstable.
Therefore, if there is a risk that the motor has not reached speed 0 for the start, there are two alternative starting methods:
Speed search condition (Pn.26) or DC braking (Pn.28 / Pn.33)

During speed search, the drive attempts to determine the current speed via its mathematical model. The operation corresponding to the setpoint settings is re-established starting at this speed. For many standard motors, this type of addition can be used.
For some motors or applications, e.g., for spindles, application of the speed search will be unsuccessful. In these cases, speed is calculated incorrectly, the drive can vibrate, or the inverter can malfunction.
In these cases, the motor must be stopped by DC braking before the drive can be restarted. During DC braking, a DC voltage is connected to the motor´s clamps. The small braking torque while the motor is still running at high speed is a disadvantage.

For more (appropriate parameters, settings, etc.) see in 7.13.4 speed search and 7.15.1 DC braking, respectively.

7.5.2.4.3 Model adaption

Some auxilliary functions can be activated via the parameter dS.18.
Adjustment of this parameter is not necessary and should only be carried out by authorised KEB service personnel.
Value 4 is an exception: Model deactivation (see "ASCL model deactivation during deceleration" / subsection "reversal"). This chapter can therefore be skipped and reading continued in 7.5.2.4.4 "parametrisation of the speed estimation control".

dS.18: Function mode			
Bit	Meaning	Value	Explanation
0	Current offset/ Adaption	0: off 1: on	activates a permanent current offset adjustment
1	Stator resistance/ adaption	0: off 2: on	activates setpoint tracing of the stator resistance, which may change during operation due to temperature effects
2	Model switch-off	0: activated 4: deactivated	Switching in the frequency controlled, current regulated operation during stopping
3	Current control	0: measured 8: calculated	Selection of the actual value source of the current controller: 0: measured current 8: current calculated from the model
4	Observer / Motor model	0: off 6: on	Activation of an observer for high frequency applications
5	reserved		
6	Voltage output for Hf-applications	0: off 64: on	Activation of a faster voltage output. Only important for high frequency applications

Current offset / adaption

In some cases, the one-time current offset measurement (either with modulation switched off or via test signals during motor identification) is insufficient since operation-dependent effects (like temperature) are not considered. With this "residual offset", a vibration is created with a frequency equal to the output frequency. The current offset adaption can reduce this effect.
Attention: Is the simple vibration not caused by the current offset, the adaption is behaving incorrectly. Therefore, this function must be activated with caution, or only to prove a current offset exists and to utilise its value. The adapted current offset can be read off via In.20 = 30, 31 in In.21.

Stator resistance/ adaption

The stator resistance can stabilise the model at low output frequencies, particularly in generatoric operation.
At low motor rating, the effect of the stator resistance in this range is quite large. Due to the motor warming, changes of up to 40% compared to the resistance calibrated in the cold state are possible. The stator resistance adaption can compensate for this change.
Under certain operating conditions, (e.g., high dynamic) the adaption diminishes the operational performance of the drive. Therefore, this function should only be activated when problems with breaking and stopping may occur for motors with small power (< 5 kW).

Current control by measured / calculated currents

For the current control, either the measured currents or those calculated from the model can be used as actual values. As a standard, the measured currents are used for control since only this assures direct control over the real currents.
Using the calculated currents is advantageous only in high frequency applications: The delay (detection of the actual current until the output of the voltages as response to the current measurement) is noticeable in these applications. For control based on calculated current, this time is minimised.

Observer / motor model, observer effect / motor model

The observer causes an equalisation between the measured currents and the currents calculated from the motor model. This is useful for some high frequency applications.
The reciprocal of amplification of the observer is set with the parameter "observer factor" (ds.23).

Voltage output for Hf applications

At high output frequencies, the voltage vector must be calculated and output in a shorter time pattern. This is possible only at 8 and 16 kHz. Important for high frequency applications

7.5.2.4.4 Speed calc. ASCL (dS.14, 15) and speed PT1-time ASCL (dS.17)

The KP (dS.14) and the KI (dS.15) of the speed calculation controller are calculated automatically during the identification of the motor parameters and may not be changed.
Only the parameter dS.17 "Speed PT1 time ASCL" can be adapted to a specific application. In non-dynamic applications, a higher PT1 time (up to 32ms for large motors) leads to a steadier calculated speed, without degradation of the control characteristics of the drive.
In contrast, a lower speed frequently permits a more dynamic setting of the speed control parameters.
If parameter dS.17 "Speed PT1 time ASCL" is changed, a previously conducted adaption of the speed controller must be checked.
If the automatic calculation of the speed control parameters is used, it must be reactivated.

7.5.2.5Special function: Rotor adaption

In speed control with speed feedback, the motor model can be used to adapt the rotor time constant. The rotor time constant is dependent on the rotor resistance, among others. Due to the temperature change of the motor rotor, the rotor resistance can change significantly compared to the identified value. This also changes the rotor time constant. This change leads to a less accurate torque display and an inferior performance of the drive.
The rotor adaption compensates for the temperature deviations of the resistance. It is activated by bit 1 in parameters dS.04 "Flux / rotor adaption mode".

dS.04 Flux / rotor adaption mode			
Bit	Meaning	Value	Explanation
1	Rotor adaption (ASM)	0: off 2: on	Activation of the rotor adaption
2	Rotor adaption/ store (ASM)	0: no 4: yes	Storage of the last rotor adaption value obtained during operation

Bit 2 determines whether the drive stores the rotor adaption value on modulation switch-off. If memory is activated (memory: yes), the inverter starts with the last value obtained during operation, after reactivation of the modulation. If memory is deactivated (memory: no), the inverter starts with the value 100%. After"net on",the inverter always starts with the value 100%.
In parameter ru.59 "rotor adaption factor", the status of the rotor adaption can be read: 100% means that the drive is working with the identified values.

7.5.3 Block diagram

Figure 7.5.3.a Block diagram ASCL

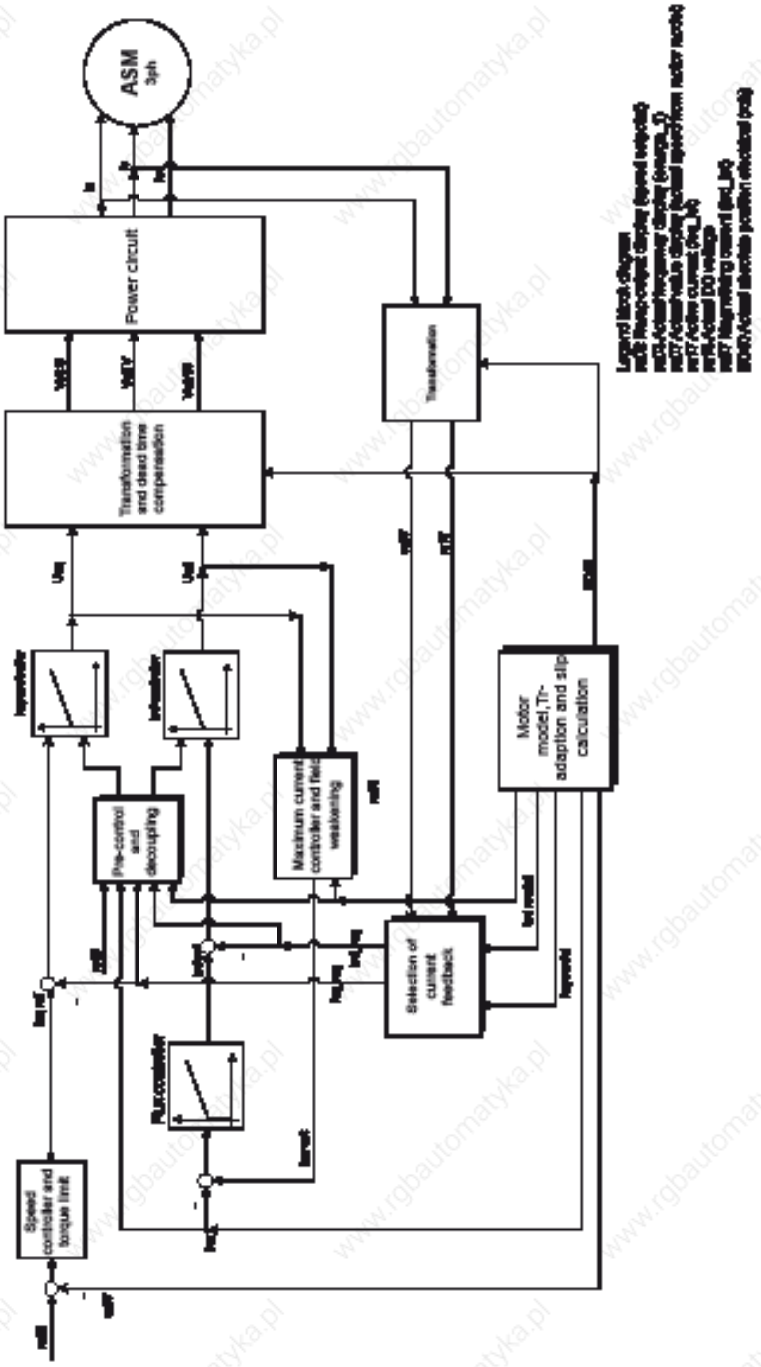

Figure 7.5.3.b Block diagram M

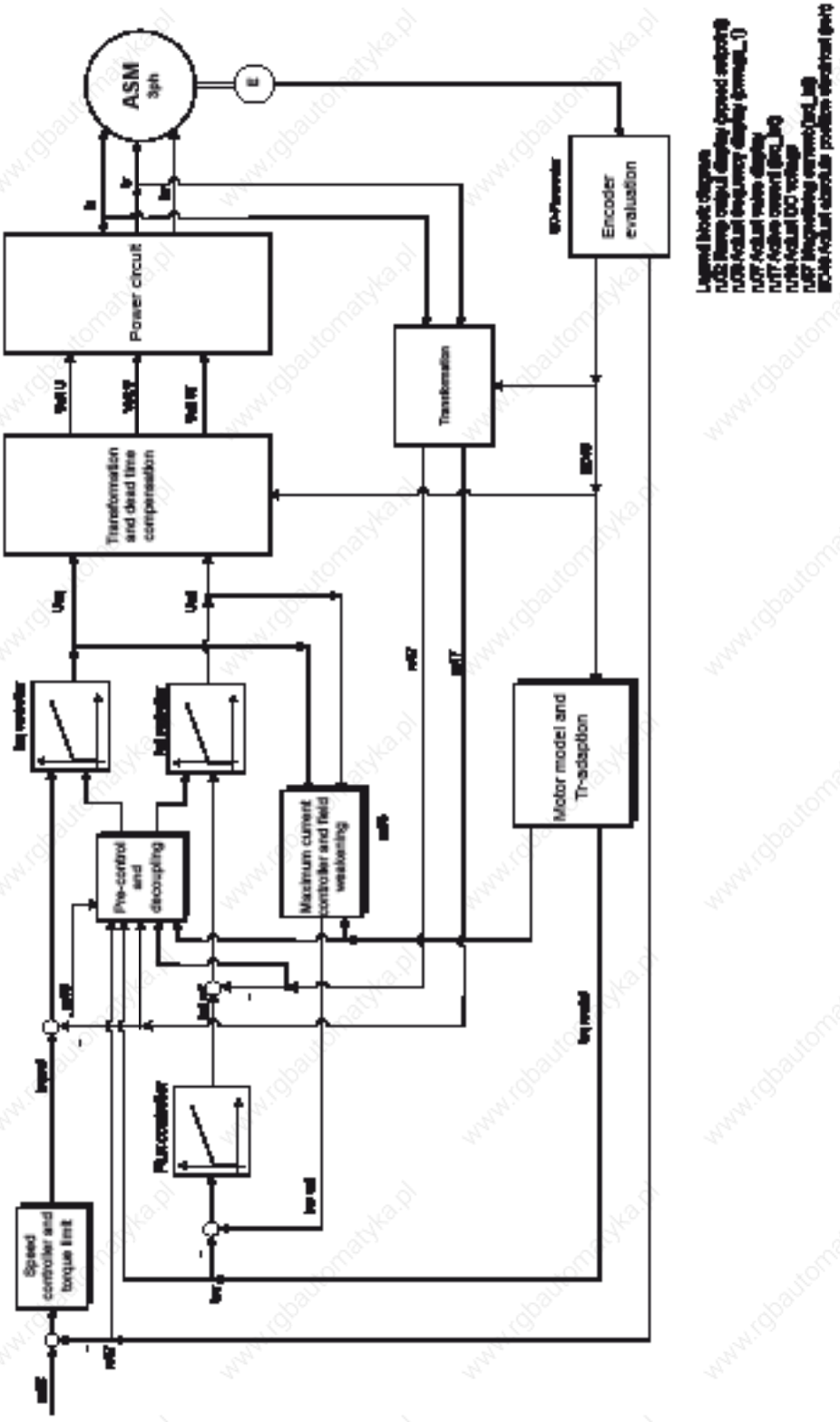

Figure 7.5.3.c SMM

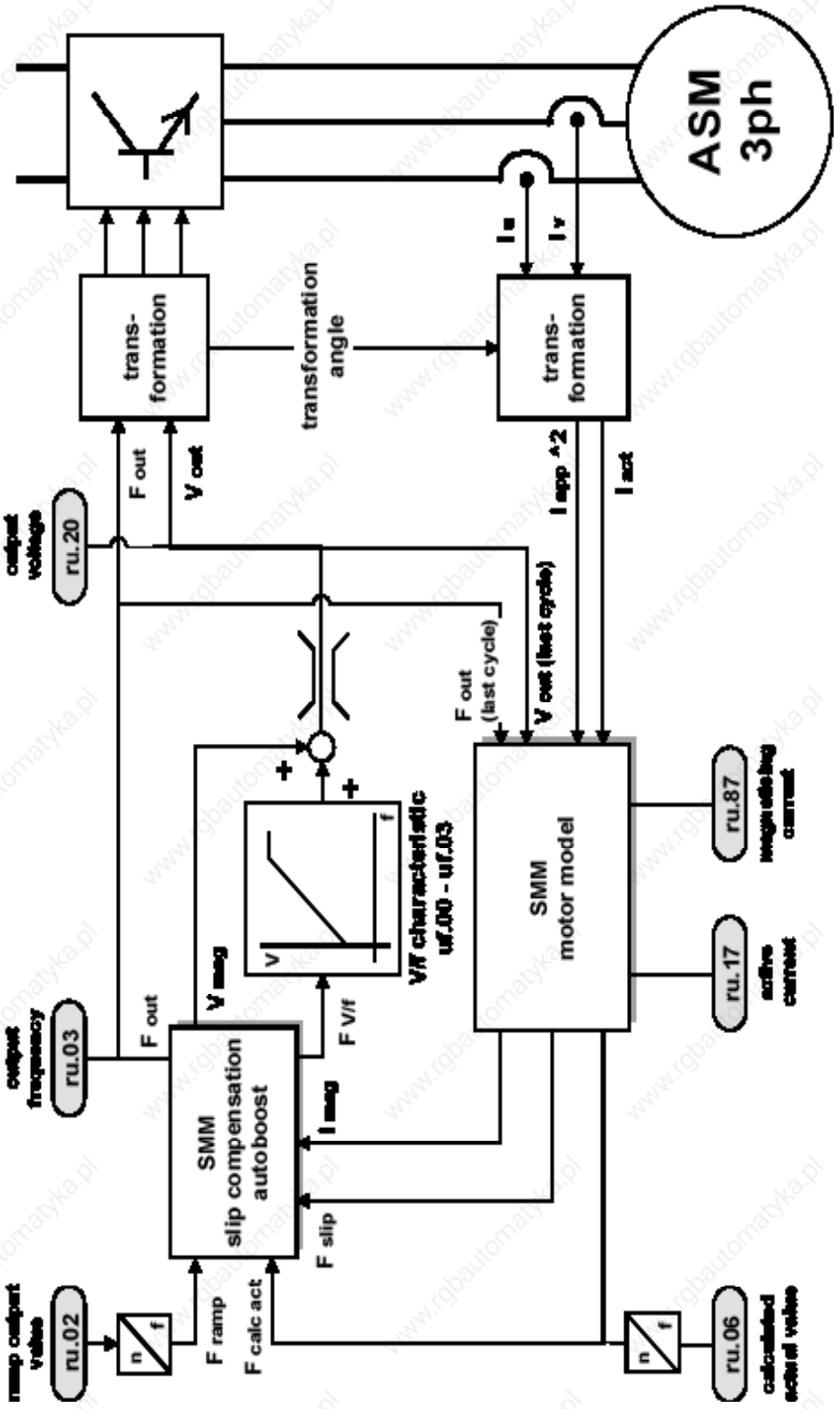

Figure 7.5.3.d Field weakening

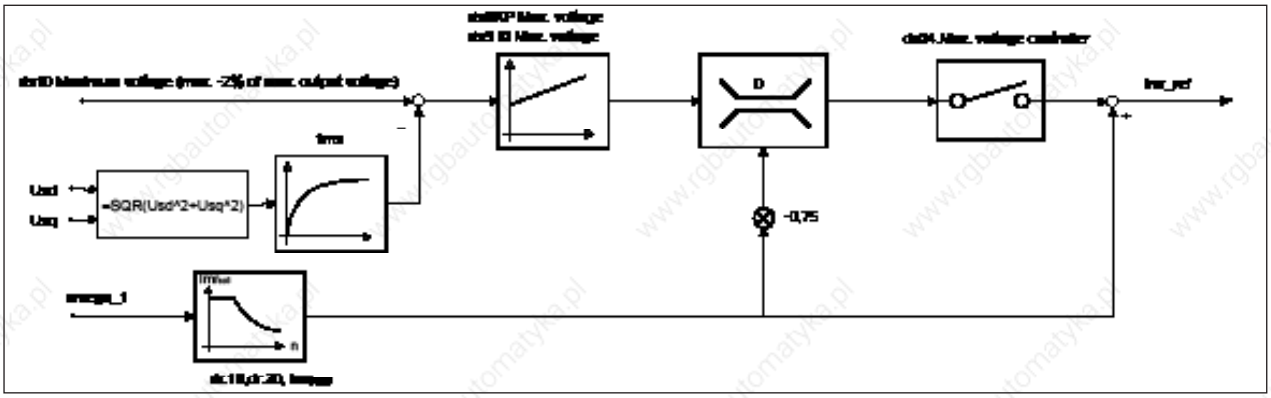

1. Introduction	7.1 Operating and appliance data
2. Summary	7.2 Analog in- and outputs I
3. Hardware	7.3 Digital in- and outputs
4. Operation	7.4 Setpoint-, rotation- and ramp adjustment
5. Selection of Operating Mode	7.5 Motor data and controller adjustments of the asynchronous motor
6. Initial Start-up	7.6 Motor data and controller adjustments of the synchronous motor
7. Functions	7.7 Speed control
8. Error Assistance	7.8 Torque display and -limiting
9. Project Design	7.9 Torque control
10. Networks	7.10 Current control, -limiting and switching frequencies
11. Parameter Overview	7.11 Speed measurement
12. Annex	7.12 Positioning and synchronous control
	7.13 Protective Functions
	7.14 Parameter sets
	7.15 Special functions
	7.16 CP-Parameter definition

7.6.1 Initial settings ..... 7.6 - 3
7.6.1.1 Motor name plate ..... 7.6 - 3
7.6.1.2 Controller configuration ..... 7.6 - 4
7.6.1.3 Actual value source ..... 7.6 - 4
7.6.1.4 Load motor dependent parameter ..... 7.6 - 4
7.6.2 Speed-controlled operation with encoder feedback ..... 7.6 - 6
7.6.2.1 Controller Structure ..... 7.6 - 6
7.6.2.2 Absolute position (encoder 1) ..... 7.6 - 6
7.6.2.3 Speed measurement ..... 7.6 - 7
7.6.3 Speed-controlled operation without encoder feedback (SCL) ..... 7.6 - 8
7.6.3.1 General ..... 7.6 - 8
7.6.3.2 Initial settings for sensorless operation ..... 7.6 - 8
7.6.3.3 Identification of the motor data ..... 7.6 - 8
7.6.3.3.1 Auto-identification ..... 7.6 - 10
7.6.3.3.2 Single identification ..... 7.6 - 10
7.6.3.3.3 Dead time compensation (uf_18) ..... 7.6 - 12
7.6.3.4 Standstill and starting phase ..... 7.6 - 13
7.6.3.5 Low speed ..... 7.6 - 15
7.6.3.6 Motor model ..... 7.6 - 16
7.6.3.7 Operation with sine-wave filter ..... 7.6 - 18
7.6.4 Block diagram ..... 7.6 - 19

7.6 Motor data and controller adjustments of the synchronous motor

There are two different operating modes for the synchronous motor:

- Speed-controlled operation with encoder feedback

Default speed-controlled operation with encoder feedback, standard version F5A–S

- Speed-controlled operation without encoder feedback

Speed-controlled operation of synchronous motors without encoder feedback SCL (sensorless closed loop) is only possible if the electrical characteristic data of the motor are known. The rotor position is emulated by means of a mathematical model of the synchronous motor. Speed control is based on a speed calculated from the rotor position rather than on the encoder feedback.
Standard version F5A-S does not contain operating mode SCL. It needs the special software F5E–S.

7.6.1 Initial settings

The following adjustments are always necessary in speed-controlled operation, independently with or without encoders:

7.6.1.1 Motor name plate

Input of the motor rating plate data is at the beginning of each start-up:

- dr.23 DSM rated current
- dr.24 DSM rated speed
- dr.25 DSM rated frequency
- dr.27 DSM rated torque
- dr.28 DSM rated motor current

The following equivalent circuit data can be taken from the data sheet.
Identification of the data offers a high accuracy and acquires the additional line resistance. The identification can be executed as described in chapter 7.6.3.3 (SCL).

- dr.26 DSM EMC voltage constant
- dr.30 DSM stator resistance
- dr.31 DSM Inductance

DSM EMC voltage constant (dr.26, dr.63)

EMC is the induced voltage in no-load operation and must be entered as peak value (phase-phase) corresponding to 1000 rpm.

$$dr.26 = EMCeff_x \sqrt{2}$$

No decimal places can be entered in parameter dr.26 for the EMC. The voltage per 1000 rpm at high-frequency motors is partly very low, that an integer setting falsifies the EMC value.

Parameter dr.63 (DSM EMC HR) can be used for higher accuracy.

To ensure downward compatibility with older parameter lists, this parameter can be deactivated with „0: off“.

The maximum permissible speed is also calculated from the EMC which is displayed in ru.79 (abs. speed [EMC]) corresponding to the DC link voltage. The maximum DC link voltage, UZKmax, can be found in the power circuit manual.

$$ru.79 = \frac{\text{Max. } UDC_{link} \times 1000\ \text{rpm}}{dr.26}$$

DSM stand still current (dr.28)

The stand still current affects the electronic motor protective function (see chapter 7.13.).

7.6.1.2Controller configuration

For controlled operation, parameter cS.00 must be set to the value 4: „speed control“.

cS.00 Speed control configuration			
Bit	Description	Value	Function
0...3	Control mode	4: Speed control	
		5: Torque control	(description see chapter 7.7)
		6: Torque/ speed	

7.6.1.3Actual value source

The actual value source for speed control must be selected in parameter cS.01 .
Possible values for regulated drives are 0 (speed measurement via encoder interface channel 1) or 1 (speed measurement via encoder interface channel 2).
Description of the correct parameter setting of the encoder interfaces is made in chapter 7.11 "speed measurement“.
cS.01 = 2 (calculated actual value) must be selected at operation without speed encoder (only SCL).

cS.01 Actual source			
Bit	Description	Value	Function
0...1	Actual value source	0: Channel 1	Control to encoder interface 1
		1: Channel 2	Control to encoder interface 2
		2: calculated actual value	Control to estimated speed
2	System inversion	0: off	
		4: an	

With activation of the system inversion it is reached that the motor with selected rotation direction "clockwise" (e.g. by setpoint- or rotation setting) has the physically direction "counter clockwise" respectively at setting „counter clockwise“ the physical rotation „clockwise“. Precondition is a correct wiring of motor and speed feedback (if available).

7.6.1.4Load motor dependent parameter

Fr.10 = 2 (for some applications Fr.10 = 1 /explanation see below) must be entered once after input of the motor data.
The parameter can only be written in „nop“ status !

Fr.10 load motor dependent parameter	
Value	Function
0: finished	
1: uf.09	Calculation depending on uF.09 respectively voltage class
2: actual DC link voltage	Calculation depending on act. DC link voltage

The calculation at Fr.10 = 1 is depending on the voltage entered in parameter uF.09 "voltage stabilisation". If this parameter displays "off" (standard adjustment), then the voltage class of the frequency inverter (400V or 230V) is used.
The current DC link voltage of the frequency inverter, which is proportional to the supply input voltage, is considered for the calculations at Fr.10 = 2.
However this only applies if uF.09 is on "off".

Thus the following parameter are pre-charged dependent on the motor and inverter data:

Current controller
- dS.00 Kp current
- dS.01 Ki current

Torque limits:
- cS.19 Absolute torque reference
- cS.20...23 Torque limits clockwise- counter clockwise rotation/ motoring- generating
- Pn.61 Abnormal stopping torque limit
- dr.33 DSM max. torque

Motor type (only at SCL):
- nn.01 Stabilisation current
- nn.02 Lower speed limit/ stabilisation
- nn.03 Upper speed limit/ stabilisation
- nn.10 Standstill current
- nn.11 Type stabilization time constant

7.6.2 Speed-controlled operation with encoder feedback

7.6.2.1 Controller Structure

Diagram of the controller structure for operation with encoder feedback, see chapter 7.6.4.

7.6.2.2 Absolute position (encoder 1)

The system position acquires the mechanical misalignment between rotor and zero position of the mounted encoder system. This system position is preset at standard KEB motors in factory setting.
In order to operate a customer motor with encoder system it is necessary to make the automatically calibration to detect the system position.
The following steps must be done:

- open control release ST (terminal X2A.16)
- Initial settings described in chapter 7.6.1 must be done.
- Enter increments per revolution in Ec.01/ Ec.11
- Check dircetion of rotation. The speed display ru.09/ ru.10 must be positive in case of manual clockwise rotation. Otherwise the direction of rotation can to be changed as defined in chapter 7.11.7.
- Attention has to be paid to in-phase connection (connect inverter clamps U, V, W on the motor terminal board with the appropriate contacts). If the cabling is correct, the setting "clockwise rotation" will lead to the following sense of rotation:

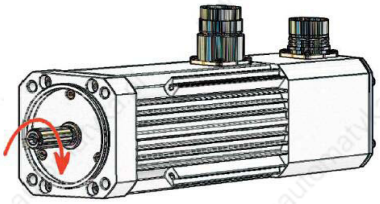

- Motor must mandatory run with no load.
- Enter "2206" in In Ec.02/ Ec.12 and confirm message (depending on encoder interface).
- Close control release
- The motor is excited with motor current dr.23. Subsequently a forward-/reverse running identification is executed. On successful conclusion the inverter state displays ru.00 = 127 (drive data calculated).
- Error E.EnC1 or E.EnC2 is triggered if the motor cannot rotate free or if the direction of rotation is not confirm with the phase position.
- Open control release after successful trimming (ru.00 = 127 drive data calculated).

The current system position is written into the respective parameter (Ec.02/ Ec.12).

Compatibility with S4-systems

If a S4 system shall be replaced by a F5-S, the system position for the F5 inverter can be calculated from the data of S4:

Ec.02 or Ec.12 = system position F5-S
Ec.07 = System position S4
Pole-pair number = rated frequency * 60 / rated speed

1. Calculate: Ec.07 * pole-pair number / 65536

2. Take the decimal places of this result

3. Ec.02 or Ec.12 = decimal places * 65536

Example.: Ec.07 = 49000
ppz = 3

$$\text{Intermediate value} = \frac{49000 \times 3}{65536} = 2.24304$$

Use only decimal places:

$$\text{Ec.02} = 0.24304 \times 65536 = 15928$$

Additionally, one has to be aware that the resolver cables for the S4-systems are incompatible with the corresponding F5-cables.

7.6.2.3 Speed measurement

Adjustments shall be made in the Ec parameters in order to operate the servo system (depending on the used encoder system).
See chapter 7.11 „speed measurement“.

7.6.3 Speed-controlled operation without encoder feedback (SCL)

7.6.3.1 General

With this software the speed of the motor can be calculated by the measured currents and the motor data (by means of a model). This calculated speed can be used as feedback for the speed controller. The necessary motor data for the model can be identified by the KEB COMBIVERT itselfs. Static operation with small frequencies must be avoided, because the model can become unstable. The usable frequency range is approx. 1:100. At setpoint speed 0, the speed control is deactivated and the motor is aligned using a predefined DC current.

The software version 2.x is only ready to run on the new control hardware xA.F5.230-0018 or -0019.

No compatibility exists between the previous versions 1.x and the versions 2.x; Parameter lists of the old versions must be adjusted accordingly!

7.6.3.2 Initial settings for sensorless operation

The following adjustments are default values and must not be adjusted:

- The controller configuration cS.00 must set to value „4: speed control“.
- The actual sourcecS.01 must be set to value „2: calculated actual value“.
- The break handling Pn.34 must be activated (default value = 2: without display)
- The motor model nn.00 must set to value "191".

7.6.3.3 Identification of the motor data

The required equivalent circuit data for the motor model can be determined by the KEB COMBIVERT itselfs. First, the motor data must be entered according to chapter 7.6.1, and the motor adaption must be executed.

There are two possibilities to start the identification:

- Writing of parameter dr.48 in inverter state "stop (LS)", measurement is starting automatically.
- Writing of parameter dr.48 in inverter state „no control release (noP)“ with subsequent control release.

Parameter dr.48 cannot be written in other operating conditions.

The measured values can be invalid in case of strong overdimensioning of the inverter. The rated current of the motor should be at least 1/3 of the maximum short time current limit. The short time current limit is determined by the overload characteristics and can be taken from the power circuit manual or parameter In.18 (hardware current).

The direction of rotation during identification of the EMC is always "clockwise rotation"!

Value 82 "calculate drive data / Cdd" is output during measurement in inverter state ru.00. After successful measurement ru.00 = 127 "drive data calculated/Cddr" is displayed.
If the measurement is interrupted with an error, in ru.00 = 60 "error! drive data/ E.Cdd“ is displayed. No correct operation can be ensured in case of an abort.
The current state of the identification is displayed in parameter dr.62 "state motor ident." The control release

must be switched off in order to leave the identification mode.
Parameter dr.48 must be written again in order to start a new measurement.

For safety reasons the output signal "brake release" is not set during measurement, since the motor cannot generate a defined torque in this time.

Since the identification in the automatic mode is very reliable and for the user the most pleasant method it is recommended to use generally this method according to chapter 7.6.3.3.1.

dr.48 Motor identification			
Bit	Description	Value	Function
0...4	Measurement	0: off	
		1: Calculation EMC *	Calculation of the EMC from motor data
		2: Inductance *	Measurement of the winding inductance respectively
		3: Resistance *	Winding resistance
		5: Model-/controller parameterisation *	Calculation of the current controller from equivalent circuit data
		6: EMC with rotation *	**Attention: requires motor rotation!** EMC measurement
		7: Automatically sequence without rotation	Start of the automatic measurement without EMC
		8: Automatically sequence with rotation	Start of the automatic measurement with EMC
		9: Dead time detection 2 kHz *	Measurement of dead time compensation characteristics for different switching frequencies
		10: Dead time detection 4 kHz *	
		11: Dead time detection 8 kHz *	
		12: reserved	
		13: Dead time detection 16 kHz *	
		14: Torque detection 2 kHz	Detection of the no-load torque at different switching frequencies. During operation this torque is subtracted from torque display ru.12.
		15: Torque detection 4 kHz	
		16: Torque detection 8 kHz	
		17: reserved	
		18: Torque detection 16 kHz	
		19: Current offset detection	Detection of the current offset in phase U and V
		20: reserved	
5...7	Output frequency	0: 1000Hz	The measuring frequency is changed independently during measurement. Therefore, leave the value at 0: 1000Hz !
		32: 500Hz	
		64: 250Hz	
		96: 125Hz	
		128: 62,5Hz	
		160: 32,25Hz	
		192: 15,625Hz	
		224: 7,8125Hz	

* at dr.48 = 8 auto-identification

7.6.3.3.1 Auto-identification

The automatic identification can be carried out with rotation (dr.48=8) or without rotation (dr.48 = 7) (see table dr.48). Measurement of the dead time compensation characteristics as well as stator resistance and leakage inductance occurs during standstill.
For EMC identification it is necessary to accelerate the motor onto 60% of its rated speed. For this case an additional ramp of dr.49 "Lh ident. acc/dec time" is effective". Calculation of the ramp can be taken from chapter 7.6.3.4.

The speed controller should be parameterized with small Kp-, Ki values before the motor can be accelerated. The speed controller can be preset optimally if the motor mass-moment of inertia is known (see chapter 7.7.1.2).

Depending on the used motor the identification takes some minutes!

Automatic identification cannot be executed if a sine-wave filter is connected!

Identification at encoder operation can only be executed with value 7: „automatic operation without rotation“ or as single identification, as described in the following, because the motor model is not active.

7.6.3.3.2 Single identification

As far as possible single identifications should not be used for the first measurement of the motor adaption, since invalid test reading can occur at false sequence of the identifications.
Single identification can always be used if a complete automatic measurement was executed and only individual parameters shall be identified. For example this can be a resistance measurement at rated-load operating temperature.

Inductance (dr.48 = 2)

Measurement of dr.31"winding inductance" occurs with high-frequency AC current in standstill. The measurement is started with dr.48 = 2. Measurement current is DSM rated current dr.23.
The frequency of the measurement signal is adjustable via bits 5... 7 in parameter dr.48.If the measurement current cannot be reached with 1kHz, then the identification reduces the measuring frequency automatically. Therefore the frequency value should not be changed.
The inductance value is automatically written in dr.31 after identification.

Default setting of the current controller parameters and EMC (dr.48 = 1)

The EMC can be roughly calculated from the entered motor data like rated current and rated torque. dr.48 = 1 „calculation of the EMC“ must be written for this.

$$EMC = \frac{M_n \times 90}{I_n}$$

The current controller values are also roughly preset.

Resistance (dr.48 = 3)

Measurement of the the resistance occurs with DC current in phase U to V.
The measurement is started with dr.48 = 3. The resistance value is entered in dr.30 in case of successful identification.

Calculation of the current controller from equivalent circuit data (dr.48 = 5)

The current controller parameters are calculated from the pre-identified equivalent circuit data with the adjustment of dr.48 = 5.Is not identifed in the automatic mode if this calculation should occur before the identification of the EMC.

EMC with motion (dr.48 = 6)

The drive accelerates to a rated speed of 60% for the identification of the EMC. The ramp of dr.49 (Lh.ident. acc/dec time) is used for the acceleration. The general speed limits of the op parameters are valid! (see chapter 7.4 setpoint setting)
This measurement is only possible if the EMC adaptation of nn.00 (motor model adjustment) is activated (default setting!).

The value is written in dr.26 (DSM EMC peak value) and additionally in dr.63 (DSM EMC HR) if the identification is successful executed.
Parameter dr.63 has a higher resolution and is suitable for applications with high frequencies.

Deadtime detection (dr.48 = 9…13)

The deadtime detection works only as single identification if the stator resistance is correct entered/identified.
The measured values can be read out via In.39 "deadtime selector" and In.40 "deadtime".
The deadtime compensation characteristics are not contained in the data protection, since they are specified for the respective inverter.
The measured deadtime compensation characteristics are effective during operation, if uF.18 "deadtime comp. mode" is adjusted to value 3: "automatically" The characteristic are not cleared by fr.01 "load default set" .

Torque detection (dr.48 = 14…18)

This should be executed only if the application really requires increased torque accuracy. The displayed idling torque in ru.12 (actual torque) is subtracted during operation, so that the real shaft torque is displayed.
This residual torque is partly caused by switching frequency-dependent losses in the inverter and also by means of friction losses.

The torque offset of the complete drive for the different switching frequencies is measured with dr.48 = 14... 18.
Thereby the drive accelerates in 16 steps with the adjusted ramp in dr.49 to maximum 1,3-fold synchronous speed. The general speed limits of the op parameters are effective.
The measured residual torque is stored and interpolated as correction characteristic.
The torque offset characteristic can be read out with parameters dr.58 "torque offset selectort" and dr.59 "torque offset".
The characteristics are not contained in the data protection, since they are specified for the system motor inverter.
The characteristics are deleted by Fr.01 "copy parameter set" and also by fr.10 "load motor dependent data.".

Current offset detection (dr.48 = 19)

The current offset is caused by tolerances of the components in the test circuit
and it is automatically adjusted as standard in power off status (inverter status "nop"). It is necessary in some cases to execute the adjustment in power on status by means of current-dependent tolerances in the current detection. For this adjust parameter dr.48 = 19 and a high frequency AC current is output by the inverter. The rated current of the motor is injected with a starting frequency of 1kHz. The frequency is automatically reduced if this is not possible.
Furthermore the automatic measurement is deactivated when the modulation is switched off, so the identified offset remains permanently.

It is recommended to change current offset values only in compliance with KEB.

7.6.3.3.3 Dead time compensation (uf.18)

The drive has also measured the dead time compensation characteristic during automatic identification. The calibrated characteristic must be activated for the control with motor model by the setting "dead time compensation mode" (uF.18) = 3: „automatic“.

uf .18: Dead time compensation mode	
Value	Explanation
0: off	Deactivates the dead time compensation
1: linear	Default setting for u/F characteristics open loop operation
2: e function	Only required for special applications
3: automatically	Activation of the identified characteristic. Shall always be used at control of synchronous motors with motor model

Further available kinds of the dead time compensation are only required for special applications (applications with high frequencies, some special motors) or in other operating modes (e.g. V/f characteristics controlled).
The dead time compensation can be switched off via a digital input. The digital input is selected with parameter uF.21. This disconnection is only required for special applications with high frequency.

7.6.3.4Standstill and starting phase

It must be secured that the rotor is in a defined position after switching on of the control release ST. Therefore a DC current is injected at standstill. Then the rotor rotates into its origin position.
The standstill current is ½ of the rated current and can be adapted in parameter nn.10 in default setting after operation of Fr.10.
The times (Pn.35 and Pn.36) of the brake handling are active for standstill operation. In order that the rotor does not vibrate after setting the control release, the current reaches the setpoint value in a half of the time adjusted in Pn.35 "premagenetising time". (see picture 7.6.3.4a)
The half current-dependent load torque is acceptable as mechanical load (e.g. ¼ of the rated torque at ½ of rated current at standstill).

Picture 7.6.3.4a

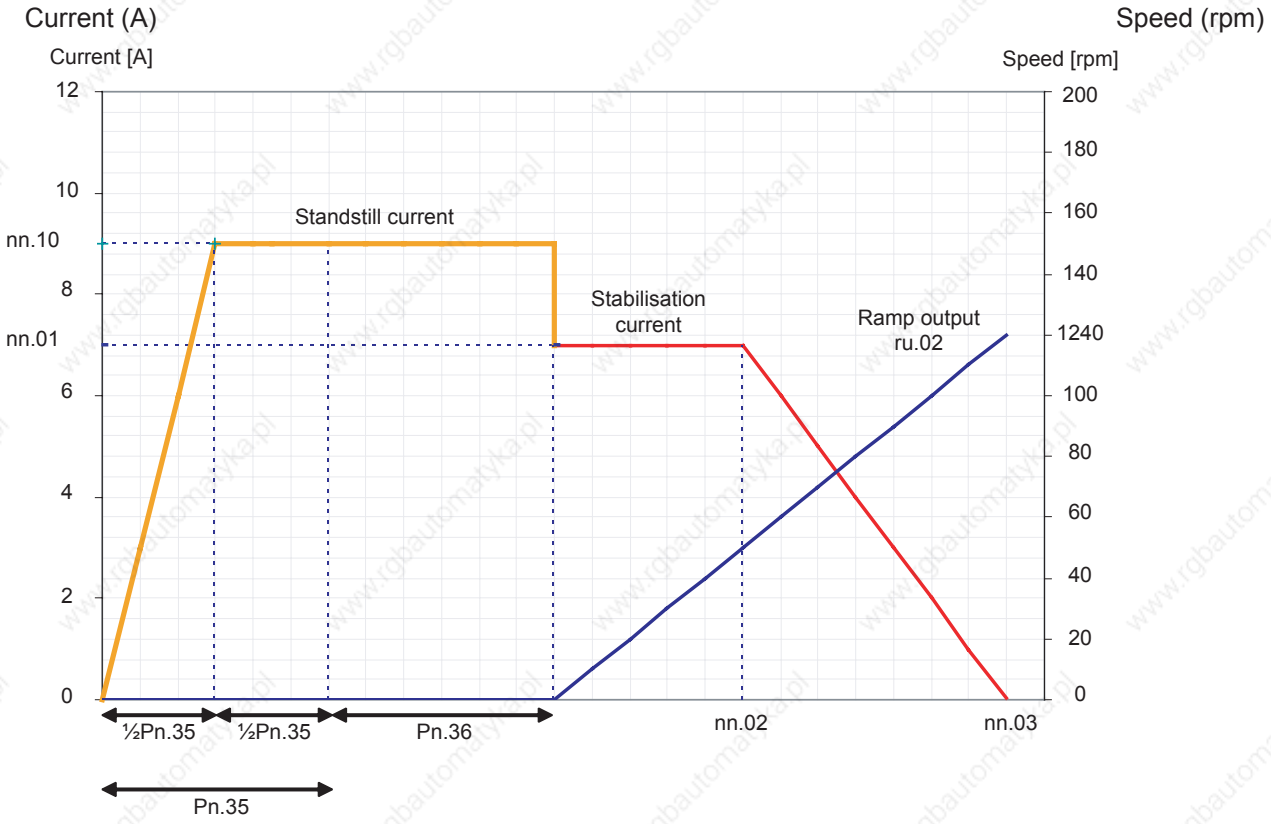

Speed search

The rotor rotates at some applications when the modulation is switched on. The current speed can be determined with Pn.26 "speed search condition". (For further information seechapter 7.13.4 SSF)

Additional start ramp

In order to leave the critical range of small speed at starting and stopping there is an additional ramp for this range.

The ramp is defined by parameter nn.08 "start-up speed" which indicates the speed range and parameter nn.09 "start-up time" which indicates the appropriate acceleration-/ deceleration time.

Picture 7.6.3.4b

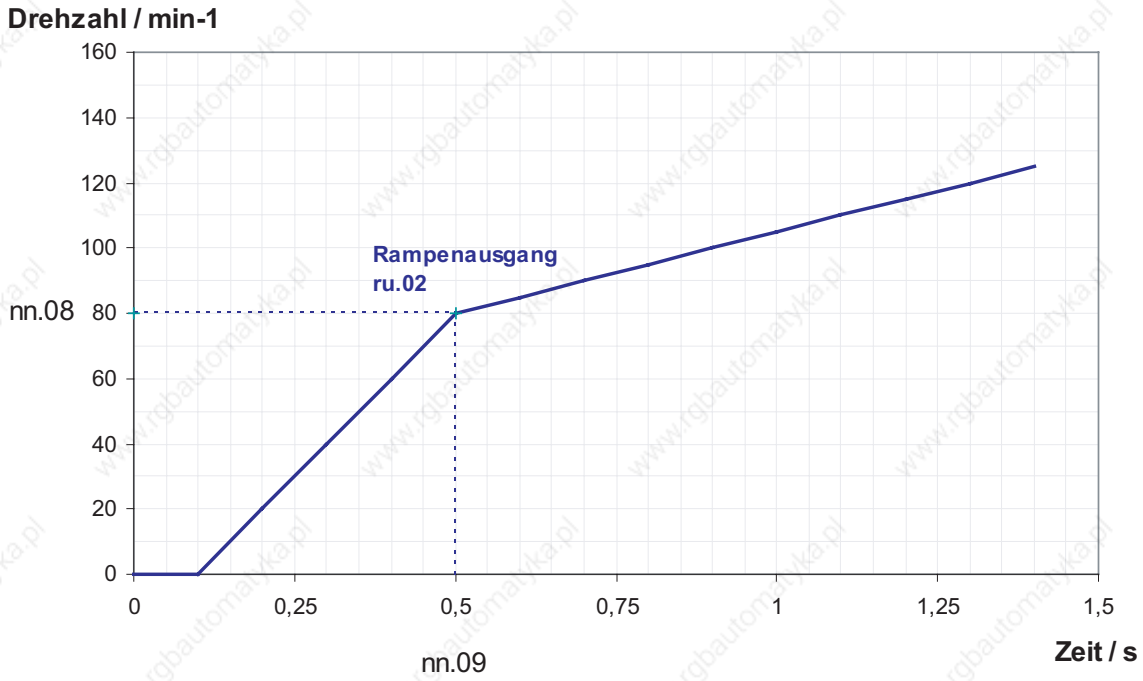

Example:

Ud.02 = 8: F5S / 4000 rpm
nn.08 = 80 rpm
nn.09 = 6,25 s

Open loop operation/ start ramp

The open loop operation is activated with bit 9 of nn.00 "motor model select" and is only active during Start ramp active (condition: start ramp is parameterized!)
The current of nn.01 "stabilisation current" must be regarded as maximum active current. The current ramp of nn.02and nn.03 must be parametrized by such way (see also chapter 7.6.3.5 "Low speed") that the lowering of current (nn.03) is upside the deactivation of the open loop operation (nn.03 > nn.08).

7.6.3.5Low speed

The critical speed range (typically below 1% of the rated speed) is stabilised by reactive current. This current adjustable in nn.01 "stabilisation current" is linear reduced depending on the actual speed in ru.07from speed nn.02 "min speed for current" to nn.03 "max. speed for current".

Picture 7.6.3.5a

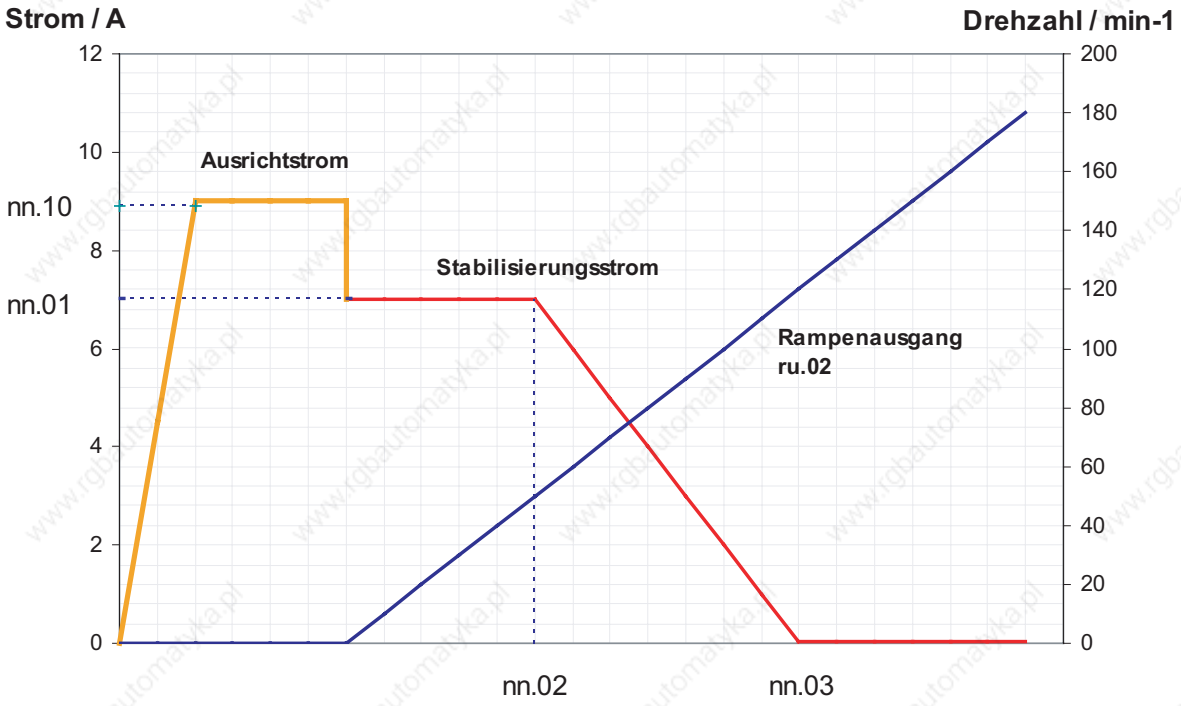

It is necessary to adapt the current or the ramp if there are vibrations during steady state.

7.6.3.6Motor model

The motor model calculates an estimated speed from the motor data and the actual values of voltage and current. Then this speed is admitted to the speed controller. The calculated model currents can be used also for current control.

nn.00 Motor model select			
Bit	Description	Value	Function
0	Standstill current and stabilisation current	0: off 1: On *	Activation of nn.01 and nn.10
1	Model stabilisation	0: off 2: On *	Stabilizes the motor model
2	Stator resistance/ adaption	0: off 4: On *	Adapts the stator resistance at low speed
3	Speed source	0: encoder interface 1 8: Model *	Speed control with model to encoder 1 Speed control with spreed estimation
4	High-speed model	0: off 16: On *	Activates the high-speed model for upper speed
5	Observer/ motor model	0: off 32: On *	Stabilizes the high-speed model
6	Current control with	0: measured current * 64: estimated currents	Current control to model currents
7	EMC adaption	0: off 128: On *	Adapts the EMC at upper speed
8	Current offset adaption	0: Off * 256: On	Adapts the current offset during operation
9	Controlled operation	0: Off * 512: On	Switching off the model during start ramp
10	Band-stop filter	0: Off * 1024: On	Activates the harmonic absorber for operation with sine-wave filter
11	Deviation controller	0: Off * 2048: On	Deviation of model currents to measured currents
12	Voltage output for Hf-applications	0: Off * 4096: On	Activates double voltage output
13	HF detection	0: Off * 8192: On	Determines rotor and system position when switching on.
14	HF injection	0: Off * 16348: On	Determines the rotor position continuously at low speed.

* Default values

Standstill current and stabilisation current (nn.01, nn.10)

The currents nn.01 "stabilisation current" and nn.10 "standstill current" can be switched off with bit 0 of nn.00. The starting phase with activated currents runs more steady. In such a way this adjustment should not be changed!
The values are limited to ½ of the HSR current In.18 if the rated motor current is higher than the inverter rated current.

Stator resistance adaption

The stator resistance changing by temperature influences can affect the behaviour at low speed as well as the start. The RS adaptation adjusts the stator resistance and stabilizes the motor model therefore.
The I-part of the adaptation can be adjusted with nn.06 "rs adaption factor". The rs adaptation becomes active with ru.17 "active current" > nn.01.

EMC adaption

The EMC changing by load and temperature influences is adjusted at upper speed.
The adaption becomes active at actual speed ru.07 > ¼ of the rated speed dr.24 and improves the accuracy of the actual torque display ru.12.

Observer

The observer amplifies the influence of the measured currents in the model. The most effects become noticeable in the upper speed range.
The value must be increased if current oscillations occur at e.g. applications with high frequency.
The observer factor can be adjusted with nn.07 "observer factor".

Voltage output for Hf applications

It is necessary for applications with high frequency to activate the double voltage output with bit 12 of nn.00.

Speed estimation

The speed estimate controller is calculated by writing on Fr.10 and cannot be changed.The speed estimate controller estimates a speed from the currents of the motor model. Parameter nn.04 "time speed calculation" determines the scan time of the speed estimate controller. This time should not be changed.

Parameter nn.05 "filter speed calculation " determines the smoothing time at the output of the controller. Oscillations are reduced when the value is increased, but the drive becomes more non-dynamic.
At special applications the drive has to rotate only into oneway direction. The respective direction of rotation can be locked with oP.40/ oP.41 "max. output val. for/rev" by writing the parameter value to "0" and thus the speed estimation is limited.

The general speed control settings can be adjusted according to chapter 7.7.1 "speed control".

Diagram of the controller structure for operation without encoder feedback, see chapter 7.6.4.

7.6.3.7 Operation with sine-wave filter

For the operation with sine-wave filter it is necessary to filter the resonance frequency with a band-stop filter. The resonance frequency of the sine-wave filter and the corresponding filter parameters can be determined with the tool sine-wave filter exe (www.keb.de). The equivalent circuit data of the motor and sine-wave filter must be entered in order to generate a parameter list. Then this parameter list must be loaded to the frequency inverter. The filter parameters are stored in the fh parameter group.
The resonance frequency is filtered of the estimated currents with software filter, in order that there is no reaction. The band-stop filter must be activated in nn.00 "motor model select" bit 10 (band-stop filter). Also it must be controlled to the estimated currents nn.00 bit 6 (current control). The deviation controller should be switched on with bit 11 of nn.00 in order to avoid possible effects on wrong estimation. The deviation controller adjusts the estimated currents to the measured currents with the scan time of nn.12 "deviation control time". This time can be increased in case of current oscillations.
The inverter current is mostly higher than the motor current because there is a current flow through the capacitor of the sine-wave filter. The single-phase capacitor value must be entered in nn.13 "C-filter [UF]" in order to clear this error.

The EMC adaptation must be deactivated with bit 7 of nn.00.

The increased current ripple and the capacitor current must be considered at the dimensioning of the inverter! The minimum inverter switching frequency must be higher or equal than the minimum switching frequency of the sine-wave filter.

7.6.4 Block diagram

Figure 7.6.4.a Block diagram SCL

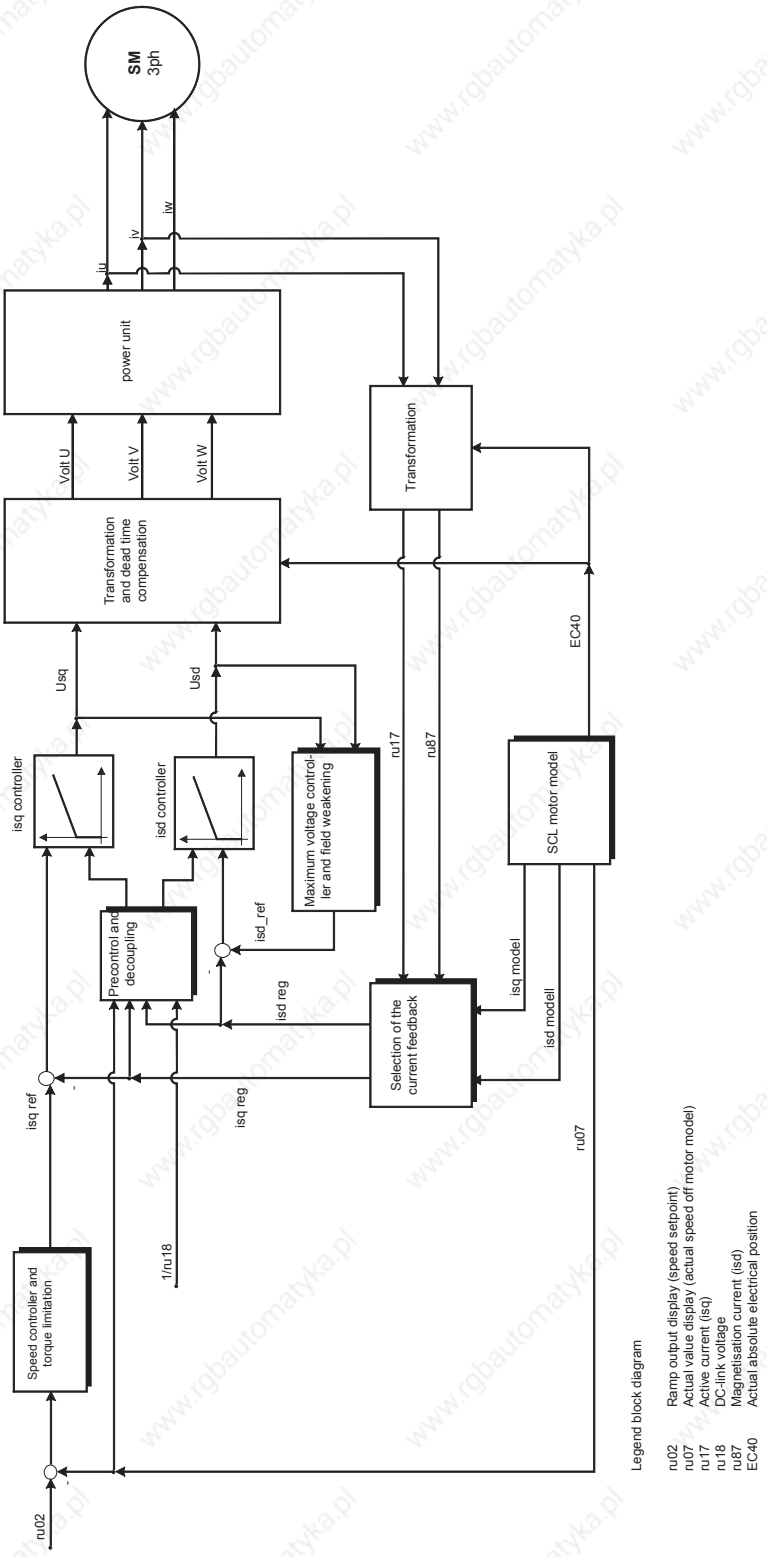

Figure 7.6.4.b SCL Current feedback

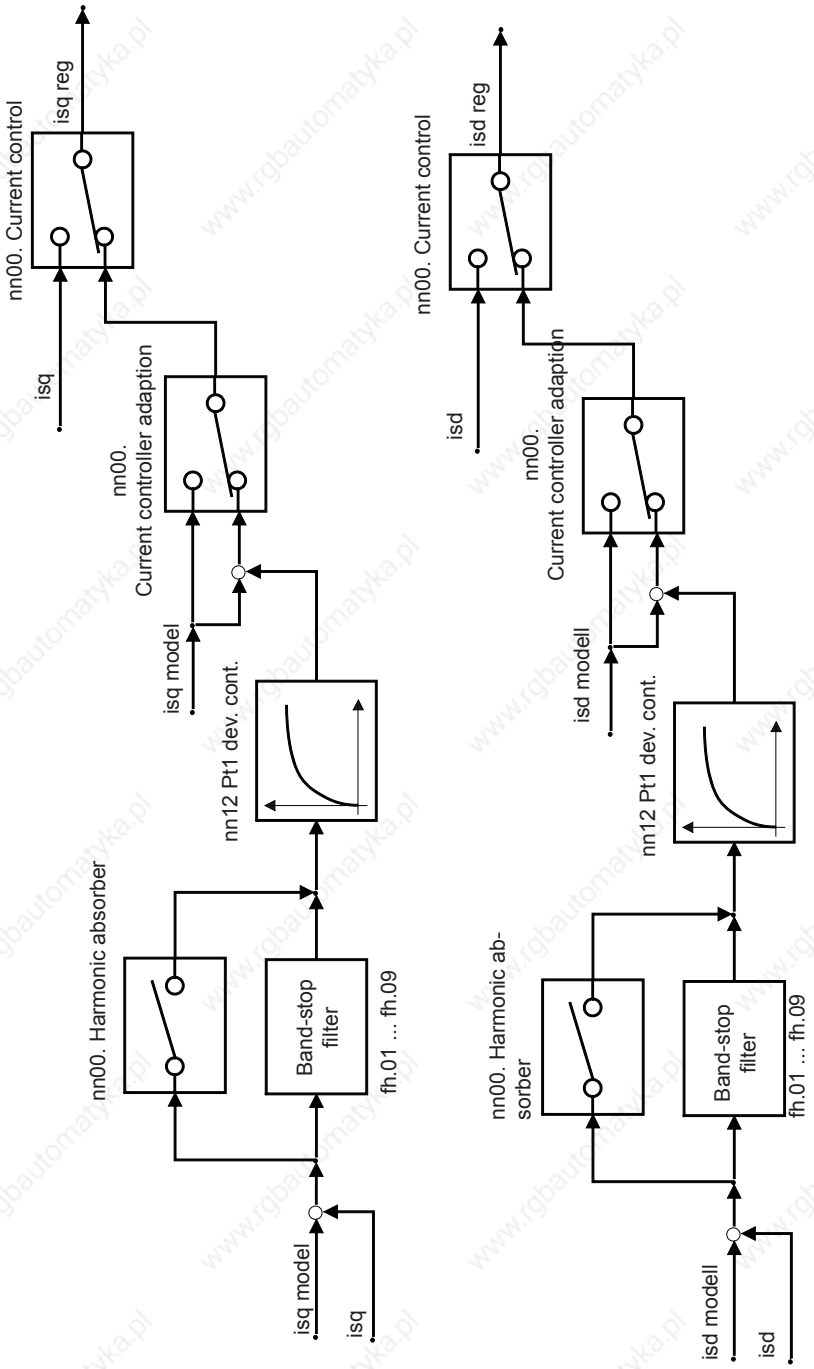

Figure 7.6.4.c Speed controller and torque limitation

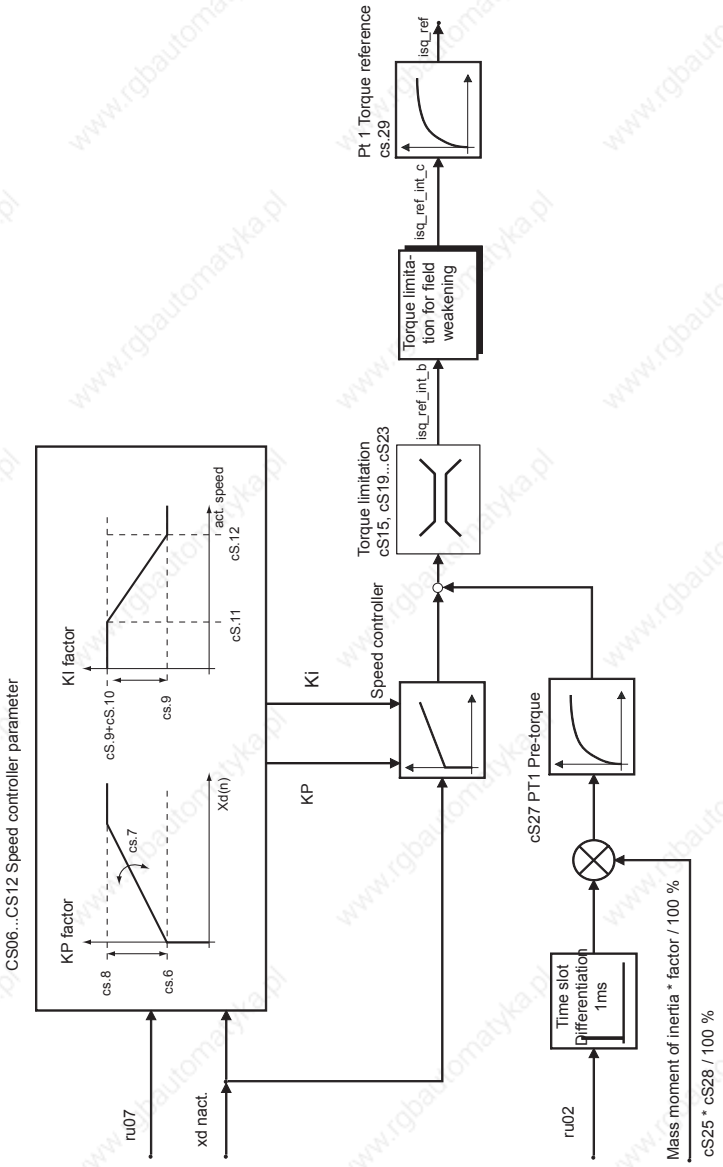

Figure 7.6.4.d Torque limitation field weakening

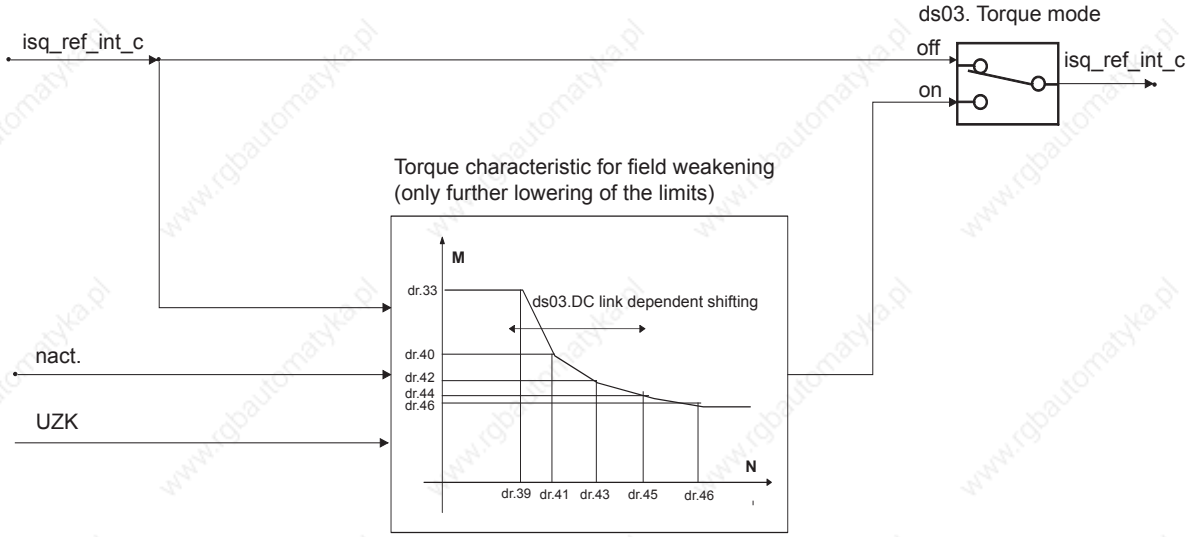

Figure 7.6.4.e Field weakening

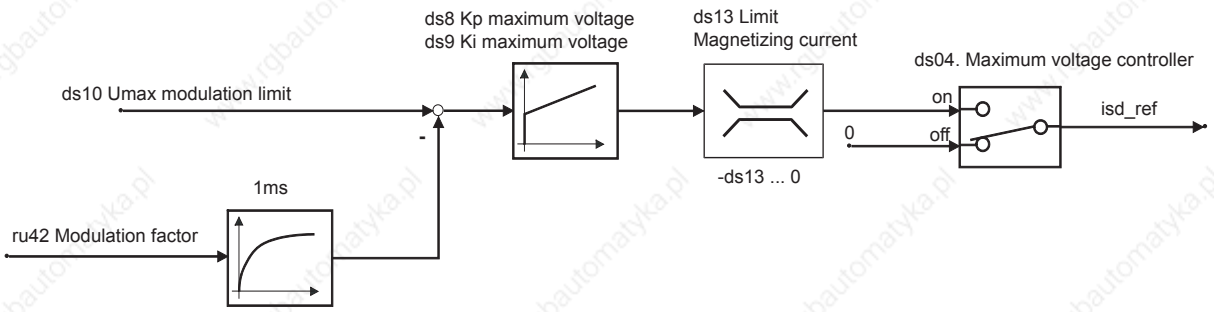

1. Introduction	7.1 Operating and appliance date
2. Summary	7.2 Analog in- and outputs I
3. Hardware	7.3 Digital in- and outputs
4. Operation	7.4 Setpoint-, rotation- and ramp adjustment
5. Selection of Operating Mode	7.5 Motor data and controller adjustments of the asynchronous motor
6. Initial Start-up	7.6 Motor data and controller adjustments of the synchronous motor
7. Functions	**7.7 Speed control**
8. Error Assistance	7.8 Torque display and -limiting
9. Project Design	7.9 Torque control
10. Networks	7.10 Current control, -limiting and switching frequencies
11. Parameter Overview	7.11 Speed measurement
12. Annex	7.12 Positioning and synchronous control
	7.13 Protective functions
	7.14 Parameter sets
	7.15 Special functions
	7.16 CP-Parameter definition

7.7.1. Speed controller parameters ..... 7.7 - 3
7.7.1.1 Basic settings ..... 7.7 - 3
7.7.1.2 Automatically adjustment of the speed controller (only at the operation with motor model) ..... 7.7 - 3
7.7.1.3 Operating condition dependent control parameters ..... 7.7 - 4
7.7.2. Determination of the mass moment of inertia ..... 7.7 - 5
7.7.3. PT1 output filter ..... 7.7 - 6
7.7.4. Acceleration dependent pre-control ..... 7.7 - 6
7.7.4.1 Precontrol reach-through / smoothing ..... 7.7 - 7
7.7.4.2 Setpoint smoothening ..... 7.7 - 7

7.7 Speed control

The speed controller is a PI controller.
A PT1 low pass filter is series-connected.
The integral factor Ki can be changed speed-dependent. The proportional factor Kp can be increased proportionally to the control deviation.
In order to improve the control performance of the drive (low overshoot, higher dynamics), the speed controller can be pre-controlled with known mass-moment of inertia.

7.7.1. Speed controller parameters

7.7.1.1 Basic settings

The speed controller is a PI controller.
The proportional factor "Kp speed" is adjusted in cS.06 and the integral factor "KI speed" in cS.09.

7.7.1.2 Automatically adjustment of the speed controller (only at the operation with motor model)

Kp (cS.06) and Ki (cS.09) of the speed controller can be preset by the inverter. For this the mass-moment of inertia of the complete system (motor + rigidly coupled load) must be entered in cS.25 "inertia".

After input of the motor data parameter Fr.10 "Load motor dependent parameter" must be written once to 1 or 2. Thus dependent on the adjusted rated power (dr.03) the mass-moment of inertia was pre-charged for a standard asynchronous motor in cS.25. The value of cS.25 has the right dimension for 50Hz standard motors, because at some applications the ratio of the load inertia is in a range of 0,5..2 x motor inertia.

Better results can be realized, if the total moment of inertia is exactly preset. If the value is unknown it can be determined as described in chapter 7.7.2.
Parameter cS.26 "optimisation" determines the control characteristic which should be achieved by the calculated parameters.
Parameters for a dynamic, hard speed controller adjustment are calculated.with cS.26 = 2. Disturbances like e.g. torsion or clearance of the load coupling can increase oscilallations, thus a higher value must be entered in cS.26.
Parameters for a soft and slow speed controller adjustment are calculated.with cS.26 = 15. Which value between 2 and 15 is most suitable for the application is depending on the oscillation-grade of the total system.

An oscillation of the estimated speed is a possible disturbance at encoderless operation of asynchronous motors (ASCL). Extension of parameter "Speed PT1 time ASCL" (ds.17) often enables a dynamic speed controller adjustment, i.e. a smaller value for cS.26.

Precharging of speed controller parameters can be deactivated with the adjustment of value „19 = Off" in cS.26.
The speed controller parameters are overwritten when the value for cS.26 is changed.

7.7.1.3 Operating condition dependent control parameters

The following parameters serve for the "fine tuning" of the speed controller and are not required in many applications.

variable proportional factor Kp

The proportional factor "KP speed" is adjusted in cS.06.
In addition to the standard KP value a system-deviation-dependent proportional gain can be adjusted with cS.07 and cS.08. With it the dynamic performance can be improved and overshootings can be dampened.

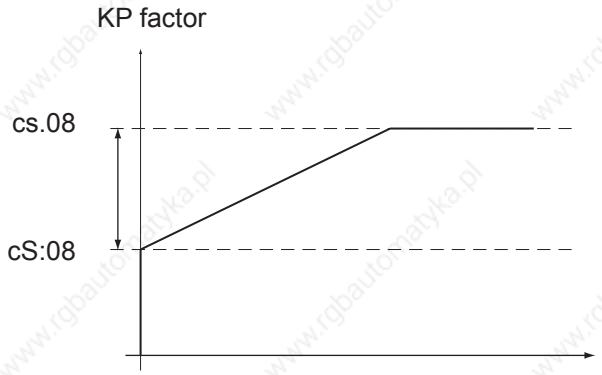

Xd(n)

variable integral factor Ki

Parameters cS.09...cS.12 determine the integral factor of the speed controller.
The KI-factor can be varied speed-dependent in order to reach a better speed rigidity at small speeds and in standstill.
- cS.09 forms the base value
- the maximum value for the integral factor is cS.09 + cS.10
- the two corner speeds cS.11 and cS.12 determine the speed range in which the KI value is changed

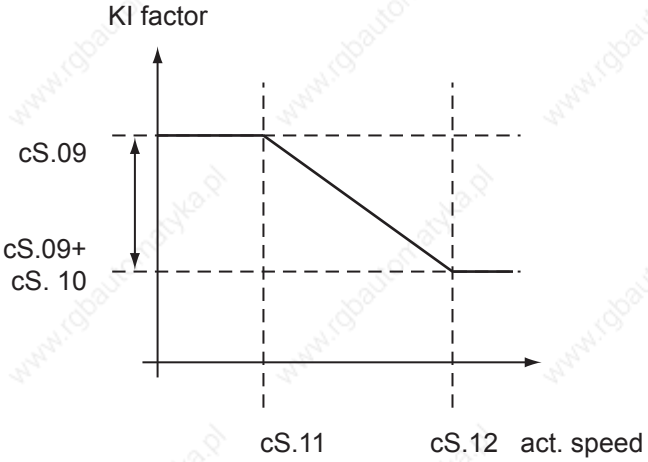

A special function can be activated in parameter max. speed for max. KI (CS.11) by setting -1: brake release which works only in connection with the brake control.
An enormous speed rigidity is required for load transfer with hoist drives or lifts,
in order that the brake release and the load transfer are not significant by the inverter.
This controller adjustment is not to be used for normal operation, since the speed controller oscillates too much at this adjustment.
The solution is to enter a high value in parameter "KI offset“ (cS.10) in order make the controller rigidy. If CS.11 indicates the value „-1: brake release ", this "KI offset " is set immediately to 0 at the end of the brake release time, not reduced during operating in a speed range.

7.7.2. Determination of the mass moment of inertia

The knowledge of the mass moment of inertia of the system (motor + rigidly coupled load) is required for the automatic calculation of the speed controller parameters as well as for the pre-control of the acceleration torque. If this mass moment of inertia is unknown, it can be determined by an acceleration test.
For this the system must be accelerated with defined, constant torque. It must be guaranteed that no significant and acceleration-independent load torque occurs by the application.

The following formula is valid:

$$J = 95493 \times \Delta M \times \frac{\Delta t}{\Delta n}$$

Example: The following acceleration was recorded with Combivis:

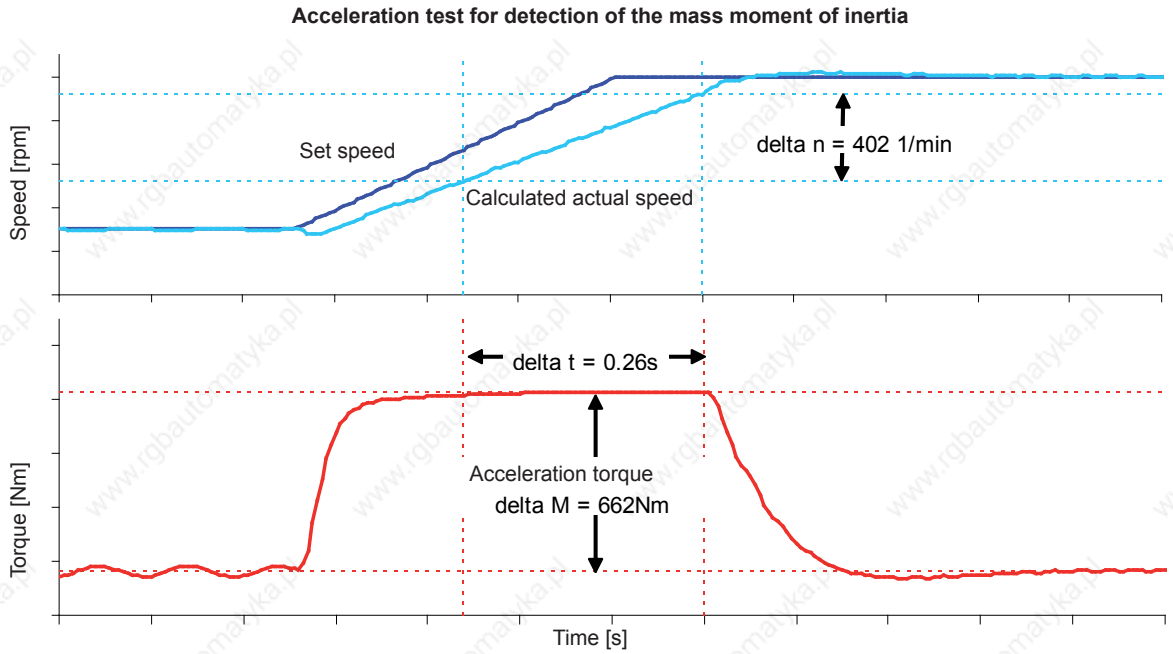

$$J = 95493 \times 662\ \text{Nm} \times \frac{0{,}26\ \text{s}}{402\ \text{rpm}} = 40886\ \text{kgcm}^2$$

In order to eliminate the influence of friction from the calculation, the moment of inertia can be determined a second time in a similar manner, however by a delay test. The average value of both inertias, which is determined at run-up or deceleration must be entered in parameter cS.25 „inertia (kg cm^2)“.

7

7.7.3. PT1 output filter

A PT1 low pass filter is series-connected to the speed controller.

Figure 7.7.3 PT1 Output filter

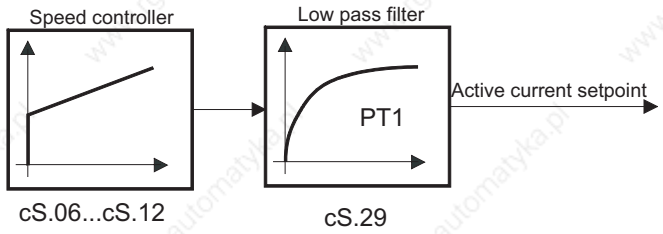

High frequency oscillations (caused by spring elements in the mechanics of the drive train) can be filtered by this way from the active current setpoint signal.
The filter time must be adjusted in parameter „act. curr. ref. PT1-time“ (cS.29). A longer filter time causes a stronger smoothing of the active current signal, but also less dynamic control characteristic and increased oscillation inclination.
Adaption of the speed controlller is necessary when changing the Pt1 time. This filter is used e.g. for spindles, in order to avoid step changes at fast load changes in the current setpoint.

7.7.4. Acceleration dependent pre-control

If the mass moment of inertia of a drive is known it can be calculated which torque is required to accelerate the drive. This function is activated, if a value unequal 0 is entered in parameter "pretorq. speed fact.%" (cS.28). This parameter must be set to 100% for a complete pre-control.

Picture 7.7.4 Acceleration dependent pre-control

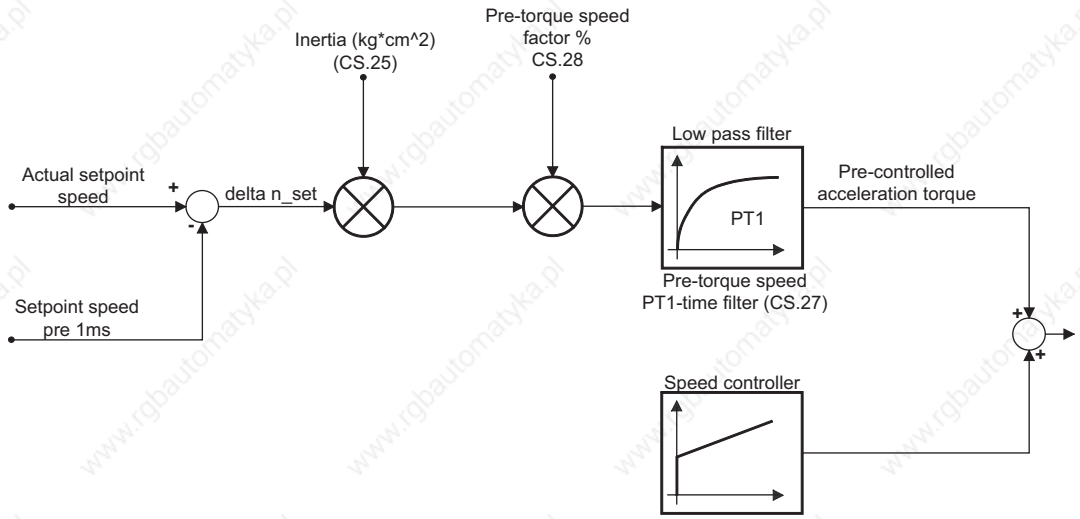

7.7.4.1 Precontrol reach-through / smoothing

For some applications it is not necessary to pre-control the complete acceleration torque (cS.28 = 100%) see the following reasons:

- a different torque is required with the same acceleration at motoring or generating (e.g. due to friction)
- the speed setpoint setting (e.g. by external control) is made in steps, so torque jumps would occur
- the (analog) speed setpoint setting is superimposed by a noise, which must be damped for the pre-control

The influence of the pre-control can be damped with parameter "pretorq. speed fact. %" (cS.28) for these applications.
Torque peaks, which are caused by a speed setpoint setting in steps, can be reduced by means of a low pass filter. At a higher time in parameter "pretorq. speed PT1- time" (CS.27) the smoothing is better, but the pre-control is more non-dynamic.

7.7.4.2 Setpoint smoothening

For applications, when new setpoints are preset by an external control within fixed time base there is one additional function for the acceleration torque precontrol: the reference splitting.

without reference splitting
(Parameter oP.74 „reference splitting“ = 0: off)
A high control value is calculated at every new setpoint step without reference splitting. The pre-control function cannot be used.

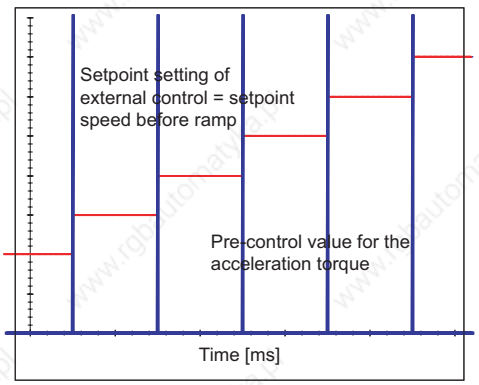

with optimal reference splitting
(Parameter oP.74 „reference splitting“ = cycle time of external reference setting in ms).
The speed setpoint is smoothed, the pre-control value remains constant.

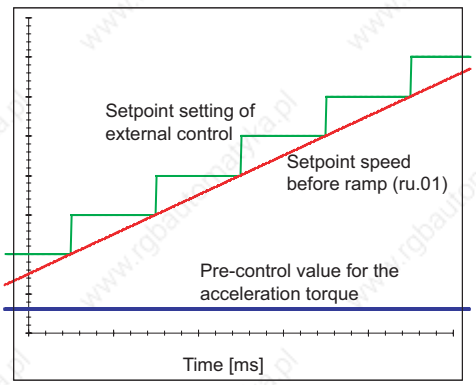

7

with reference splitting and variable clock time of the external control

The longest clock time (in ms) must be entered in parameter oP.74 "reference splitting" for optimal pre-control with non-constant clock time of the external control.

This causes a short delay of the reference value, but also a smoother precontrol value.

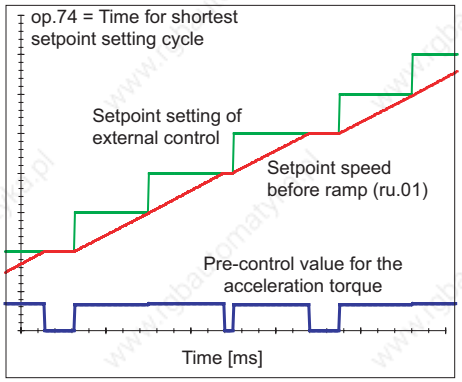

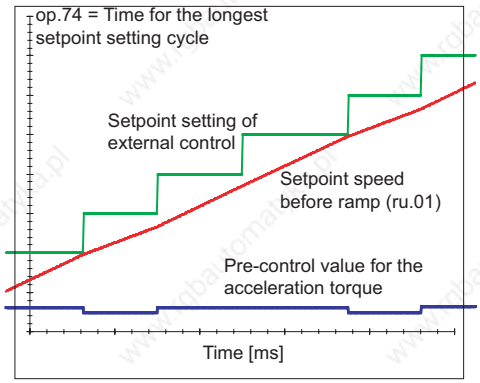

1. Introduction	7.1 Operating and appliance data
2. Summary	7.2 Analog in- and outputs I
3. Hardware	7.3 Digital in- and outputs
4. Operation	7.4 Setpoint-, rotation- and ramp adjustment
5. Selection of Operating Mode	7.5 Motor data and controller adjustments of the asynchronous motor
6. Initial Start-up	7.6 Motor data and controller adjustments of the synchronous motor
7. Functions	7.7 Speed control
8. Error Assistance	7.8 Torque display and -limiting
9. Project Design	7.9 Torque control
10. Networks	7.10 Current control, -limiting and switching frequencies
11. Parameter Overview	7.11 Speed measurement
12. Annex	7.12 Positioning and synchronous control
	7.13 Protective functions
	7.14 Parameter sets
	7.15 Special functions
	7.16 CP-Parameter definition

7.8.1 Maximum voltage controller, voltage limit ..... 7.8 - 3

7.8.2 Physical torque limits ASM ..... 7.8 - 4
7.8.2.1 Torque limits in the base speed range ..... 7.8 - 4
7.8.2.2 Torque limits in the field weakening range ..... 7.8 - 4

7.8.3 Physical torque limits DSM ..... 7.8 - 5
7.8.3.1 Torque limits in the base speed range (dr.27, dr.15) ..... 7.8 - 6
7.8.3.2 Torque limits in the field weakening range ..... 7.8 - 6
7.8.3.2.1 Determination of the magnetising ..... 7.8 - 7
7.8.3.2.2 Definition of the limiting characteristic ..... 7.8 - 8
7.8.3.2.3 Shifting of the limiting characteristic ..... 7.8 - 10
7.8.3.2.4 Effect of the current limit ..... 7.8 - 11

7.8.4 Setting of the application-dependent torque limits ..... 7.8 - 12

7.8.5 Display of the actual torque values and limits ..... 7.8 - 13

7.8.6 Display of the torque-related motor workload (ru.90) ..... 7.8 - 13
7.8.6.1 Mode 1: "Reference torque" Le 27 = 0 ..... 7.8 - 13
7.8.6.2 Mode 2: "Reference torque" Le 27 unequal 0 ..... 7.8 - 14

7.8 Torque display and -limiting

Several factors limit the maximally available torque of a drive: in the base speed range, the current available from the inverter, and in the field weakening range, additionally, the voltage that limits the breakdown torque of the motor. Furthermore, some applications also demand a limiting of the torque, e.g., to protect the mechanical parts.

7.8.1 Maximum voltage controller, voltage limit

To settle the current, the inverter always needs a voltage control reserve. If the output voltage gets too high (greater than dS.10 "Umax modulation reference"), the maximum voltage controller intervenes and counteracts the excessive voltage. By entering the values 8 or 24 in the item "maximum voltage controller" of the parameter dS.04 "flux/ rotor adaption mode", the maximum voltage controller is activated.
For value 0 or 16, the controller is switched off.

dS.04: Flux / rotor adaption mode			
Bit	Meaning	Value	Explanation
3, 4	Maximum voltage controller	0: off, max. 110%	controller off, max. modulation factor =110%
		8: on, max. 110%	controller on, max. modulation factor = ds.10 + 2%
		16: off, max. 100%	controller off, max. modulation factor =100%
		24: on, max. 100%	controller on, max. modulation factor =100%

The voltage range for which a modulation factor > 100% is needed is designated as overmodulation range.
The voltages in this range are no longer sinusoidal, which leads to distortions in the phase currents, noisy speed estimation during encoderless operation, and inferior moment accuracy.
These disadvantages are offset by a higher output voltage.
With the selection of "max. 100%" (value 16 and 24), overmodulation is not permitted. This setting should only be selected if the drive is operated in a mode with motor model (with or without speed feedback).
For the selection "max. 110%" (value 0 or 8), the available voltage increases due to exploitation of the non-sinusoidal overmodulation range.
The value 0 should not be used since the negative effects are very serious.
At value 8, the negative effects are minimised by limiting the overmodulation range to "Umax modulation reference" dS.10 + 2% . I.e., if dS.10 = 103% is selected, the maximum modulation factor is 105%. This limit applies only to the overmodulation range.
The values 0 and 8 should only be used after careful testing.

The controller is adjusted via parameters dS.08 "KP Umax", dS.09 "KI Umax", dS.10 "Umax modulation reference".
dS.08 has only a small effect and can be left at the value 0.
dS.09 determines the dynamic of the controller. If this parameter is set too small, the drive can reach the voltage limit. If this parameter is set too high, the drive begins to vibrate. If the modulation factor becomes much noisier due to an increase of dS.09, it indicates that the controller setting is too high.
Temporarily reaching the voltage limit normally poses no problems.
Parameter dS.10 determines which modulation factor has control. The closer this is to 100%, the better the inverter voltage is utilised, but also the lower are the control reserves useable for the dynamic.
The default value of 97% is usually a good compromise.
For the asynchronous machine, the voltage limitation occurs by flux reduction.
The motor flux can be reduced by the controller to ¼ of the value it would have according to the magnetising characteristic.
For the synchronous machine, the voltage limitation is done by setting a negative magnetising current. The maximum value of this current is set with the parameter dS.13 "magnetising current limit". (Regarding effect and setting of dS.13 see chapter 7.8.3 physical torque limits of the synchronous motor).

7.8.2 Physical torque limits ASM

7.8.2.1Torque limits in the base speed range

In parameter dr.14, the rated torque (calculated from rated power and rated speed) of the motor is displayed.
In dr.15, the maximum torque (limited by the maximum current of the inverter) is displayed.
If hardware current limiting is activated (uF.15 = 1 or 2), the maximum current is equal to the hardware current level (In.18) minus a safety reserve of 5% of the inverter rated current.
If hardware current limiting is deactivated (uF.15 = 0), the maximum current is equal to the overcurrent error limit minus a safety reserve of 10%.

Additionally, the motor current can be limited through software with the parameter dr.37 "maximum current" (see chapter 7.10.2). This limitation also affects the maximum achievable torque, but is not shown in dr.15.
Through the torque limitation, the active current is limited simultaneously in the base speed range . Due to the additional magnetising current, the current limit of the inverter can still be exceeded. Therefore, the current limiting through software should additionally be activated.

7.8.2.2Torque limits in the field weakening range

When the motor overloads, i.e., when a torque upwards of its torque limit is demanded from it, the maximum voltage controller reduces the flux too much and thereby also reduces the maximum achievable torque.
Therefore, the maximum permissible torque must be reduced in the field weakening range.
With the parameters dr.15...dr.18, the torque limiting characteristic is defined.

Figure 7.8.2.2a Field weakening range 1/x reduction

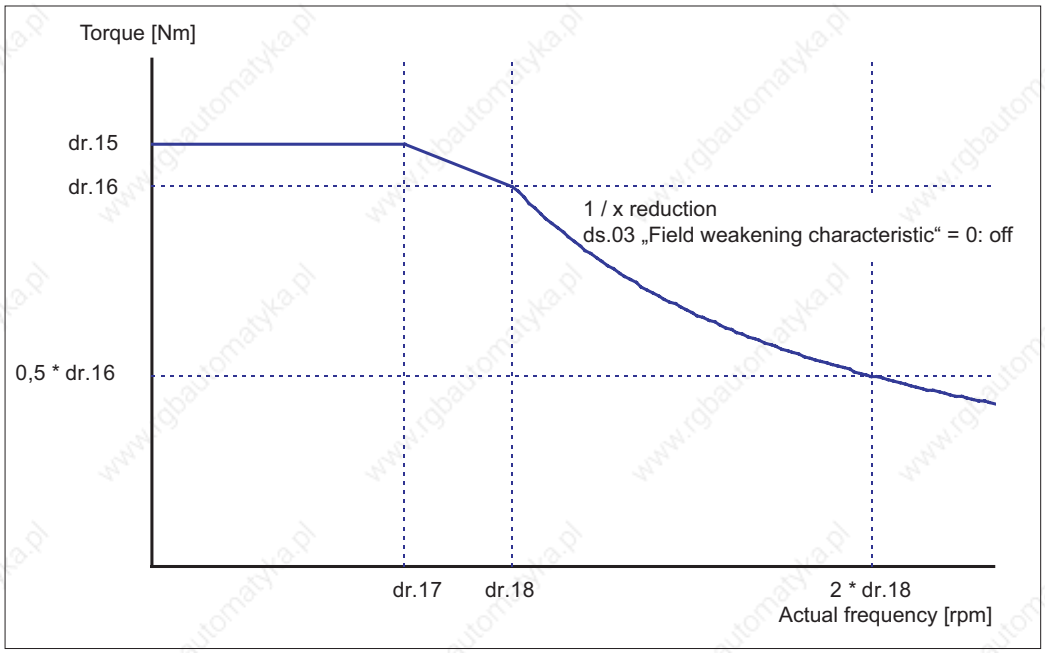

The "max. torque FI" (dr.15) depends on the maximum inverter current and cannot be changed.
In the default setting, the maximum torque in the field weakening range is lowered - due to the flux reduction - following a 1/x-function.
The physical breakdown torque characteristic of the motor is, however, a quadratic characteristic, i.e., the maximum active current in the field weakening range must also decrease.
If the motor is to be utilised up to its limits, the quadratic limiting characteristic must be activated. This occurs via the value 2 in item "field weakening characteristic" of the parameter dS.03 "current/torque mode".

dS.03: Current / torque mode			
Bit	Meaning	Value	Explanation
1	Field weakening characteristic	0: off 2: on	Activation of the active current limitation in the field-weakening range

With the parameter dr.16 "DASM max. torque corner speed" the limiting characteristic is adapted to the motor.
dr.16 = breakdown torque of the motor (at speed dr.18) - safety reserve

Example:
a motor shall have the following nominal properties:

Rated speed: 1470 rpm	Rated frequency = 50Hz
Rated torque: 36 Nm	Rated torque / breakdown torque = 2,5

chosen value for DASM field weakening speed (dr.18):	1500 rpm
Data sheets for breakdown torque of the motor at rated frequency:	2,5 * 36Nm = 90Nm
Safety reserve	25% = 22,5 Nm

dr.16 "'DASM max. torque corner speed" = 90Nm – 22.5Nm = 67.5Nm

The value of dr.16 can be greater than the value in dr.15, since the breakdown torque of the motor can be greater than the maximum torque of the inverter.
The safety factor is necessary because the limiting characteristic must be sufficiently far from the physical breakdown torque of the motor.

Figure 7.8.2.2 b Field weakening range square reduction

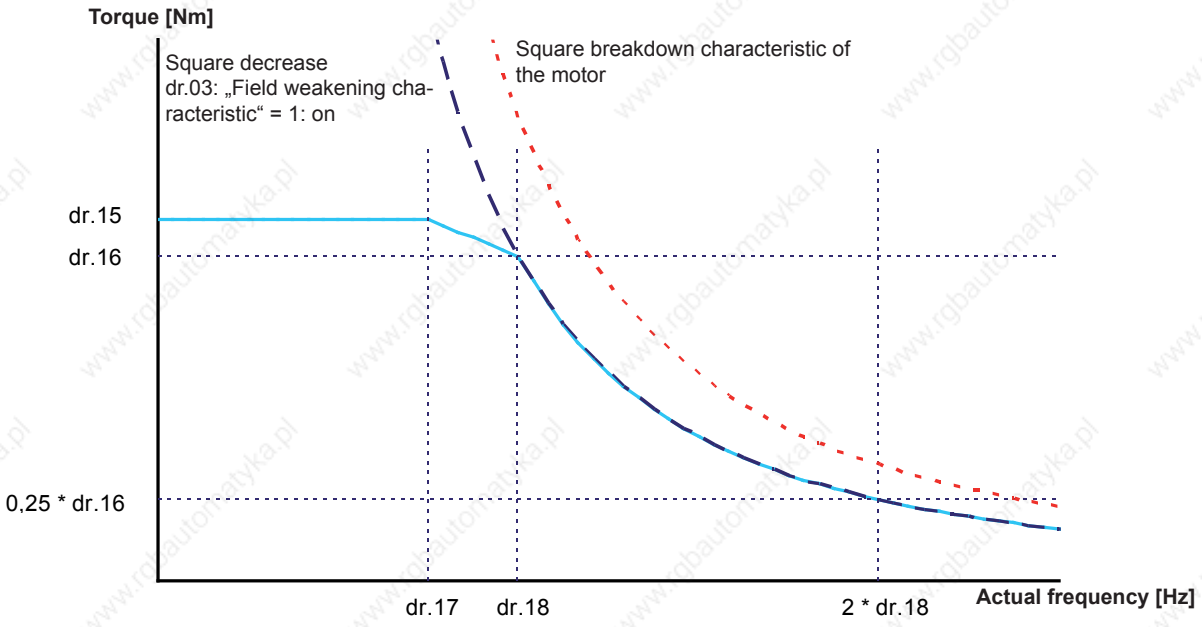

7.8.3 Physical torque limits DSM

7.8.3.1 Torque limits in the base speed range (dr.27, dr.15)

In parameter dr.27, the rated torque of the synchronous motor must be entered according to the name plate.

In dr.15, the maximum torque (limited by the maximum current of the inverter) is displayed.

With activated hardware current limit (uF.15 = 1 or 2), the maximum current is equal to the hardware current level (In.18) minus a safety reserve of 5% of the inverter rated current.
With deactivated hardware current limit (uF.15 = 0), the maximum current is equal to the overcurrent error limit minus a safety reserve of 10 %.

7.8.3.2 Torque limits in the field weakening range

Normally, a synchronous motor is operated with a magnetising current = 0.
If the useable speed range has to be increased, one has to run it in the "field weakening range". In this range, the maximum voltage controller provides a magnetising current that counteracts the pulse wheel voltage.
If the inverter malfunctions, one gets magnetising current = 0. The motor then feeds the pulse wheel voltage back into the inverter. This voltage may maximally reach the overvoltage threshold, because otherwise the inverter is damaged. Therefore, the permissible speed is limited. If the drive exceeds the value of parameter ru.79 "abs. speed value (EMK)", the inverter gives an "error! excessive speed".

$$\text{Voltage of the magnet wheel} = \frac{\text{DSM EMK [Vpk * 1000rpm] (dr.26) x actual speed}}{\text{1000 rpm}}$$

Attention:
The advantage of the higher maximum speed is offset by several disadvantages:

- the drive is more prone to vibrations in the base speed range
- not all motors are suitable for field weakening operation
- due to of the magnetisation current requirements, a higher current is needed for the same torque
- the rotor position information must be exact. A system position error (e.g., due to inexact encoder mounting) can render the drive uncontrollable.

7.8.3.2.1 Determination of the magnetising current limit (dS.13)

For every motor, a specific, ´ideal´ magnetising current limit exists. If the limit is set too low, the available field weakening range is very small.
The following figure shows the relation between the maximum achievable torque and the magnetising current limit dS.13.

Figure 7.8.3.2.1a Magnetizing current limit

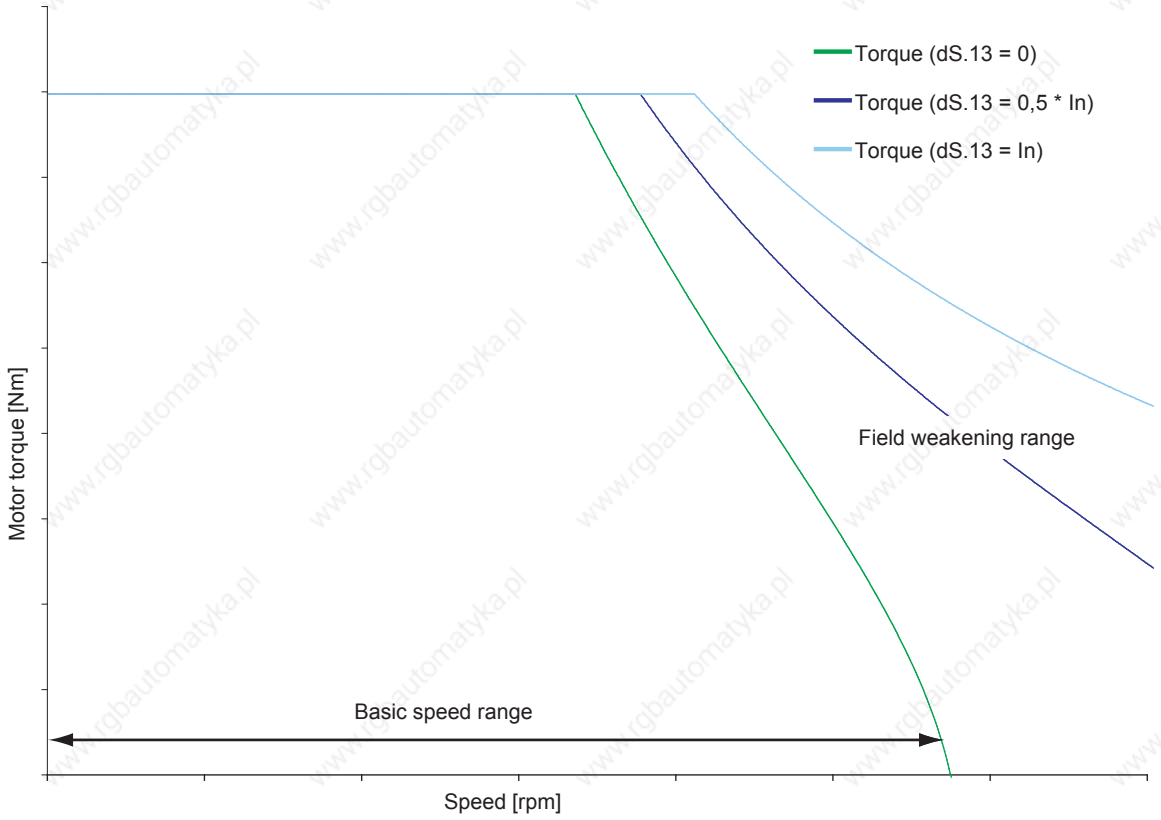

Is the magnetising current limit set too high, the available torque decreases again. In addition, too high a value for dS.13 can cause the maximum voltage controller to "hang". That means: for setting the magnetising current, more voltage is used than is gained from the field weakening. The voltage, therefore, remains too high.

A typical value for dS.13 is the rated motor current. In the field weakening range, the current needed to set a defined torque increases.

Figure 7.8.3.2.1b Limit current in the field weakening range

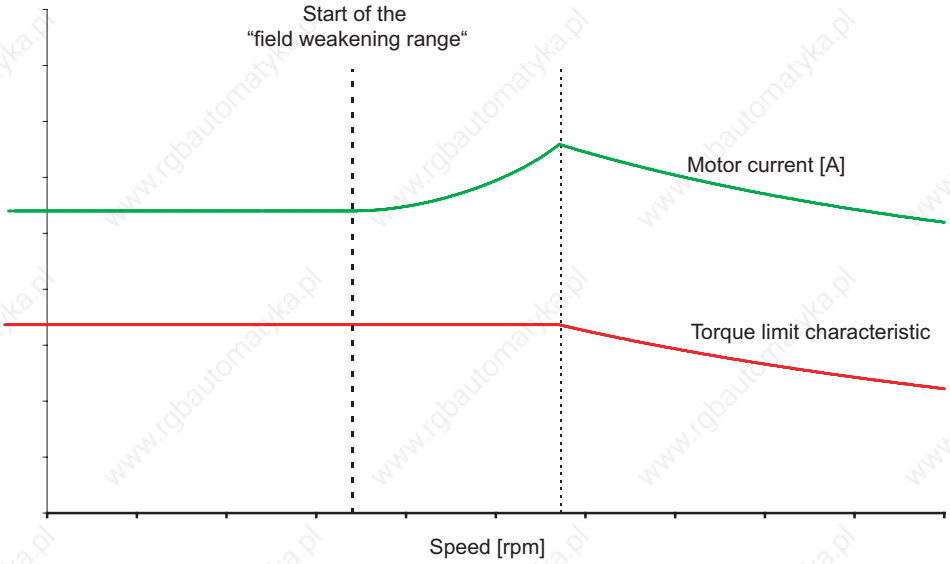

Attention:
To assure that the speed controller can control the drive, an active current must always be available that should not fall below 0.5 x dS.13 .
It is necessary to pay attention to the appropriate settings for the torque limit and for the maximum current!

7.8.3.2.2 Definition of the limiting characteristic

Starting at a certain speed, the drive cannot provide the same torque in field weakening operation that it provides in the base speed range.

If the drive is to accelerate at a constant torque limit (e.g., double the rated torque), the motor is (despite field weakening) physically unable to provide this torque.

The set torque can also not be adjusted anymore and the drive ´hangs´ in the voltage limit (modulation factor ru.42 = 100%). Therefore, a limiting characteristic that mirrors the physical limits of the drive must be given. this limit depends on the dS.13 "magnetising current limit".

If no limiting characteristic is given, the user must insure that the motor is not asked to deliver an inadmissibly high torque by choosing suitable acceleration /deceleration ramps and by appropriate selection of the load.
The parameters dr.33 and dr.39...47 are used to set the limiting characteristic.

Attention:

For the torque values of the limiting characteristic, the value 0 must never be chosen. Also, the torque at the highest speed (i.e., the last point on the characteristic) should minimally be set to the following value:

$$M_{min} = 0{,}37 \times \frac{\text{Magnetising current limit (dS.13)}}{\text{DSM rated power(dr.32)}} \times \text{DSM rated torque (dr.27)}$$

This value must never be fallen short of for the following reason:
A potential error in the position sensing leads to the magnetising current creating a torque in the field weakening range. An error of 20° electrical causes an unwanted torque from the magnetising current of maximally:

$$M\ dS.13_{= \sin(20°) \times} \frac{\text{Magnetizing current limit (dS.13)}}{\text{DSM rated power (dr.32)}} \times \text{DSM rated torque (dr.27)}$$

If this torque error cannot be compensated for due to the limiting characteristic, the drive becomes uncontrollable.
All other torque values must be chosen appropriately higher.
The parameters dr.33, 40, 42, 44, 46 contain the maximum torque for the speeds in dr.39, 41, 43, 45, 47. Values between these points are interpolated linearly.

Figure 7.8.3.2.2 Limiting characteristic

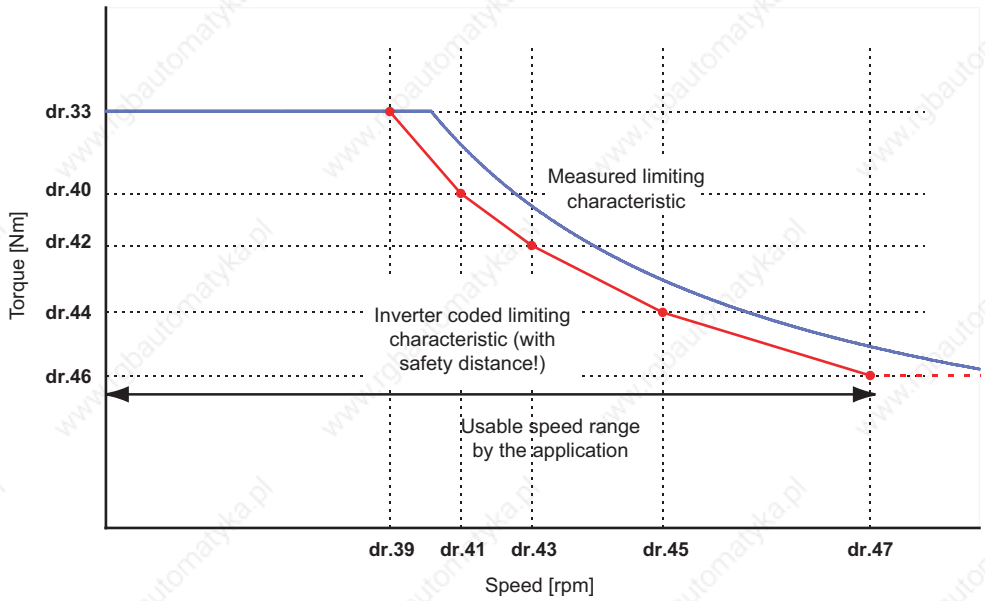

The limiting characteristic is activated via dS.03 bit 1.

dS.03: Current / torque mode			
Bit	Meaning	Value	Explanation
1	Field weakening characteristic	0: off	Activation of the limiting characteristic (determined via dr.33, dr.40...47)
		2: on	

7.8.3.2.3 Shifting of the limiting characteristic

The physical torque limiting characteristic of the motor depends on the maximum output voltage of the inverter. This is determined by the magnitude of the DC link voltage, which, in turn,depends on the mains input voltage and the inverter load.
Therefore, different modes for the programmed limiting characteristic can be selected in dS.03 .

dS.03: Current / torque mode			
Bit	Meaning	Value	Explanation
2, 3	ZK dependent shift of the characteristic (SM)	0: off	Shift generally not active
		4: on	Shift generally active
		8: >Un(FI) = off, abnormal stopping = off	Shift not active, if ZK voltage is greater than the nominal voltage (also for emergency stop)
		12: >Un(FI) = off, abnormal stopping = on	Shift generally not active for emergency stop, otherwise inactive if ZK voltage is greater than the nominal voltage

The value 0 ("off") can be used if the limiting characteristic for the mains input voltage is programmed, the machine is operated with it, and this voltage is relatively constant.
The advantage (e.g., during ramp-up at the torque limit) is that the continuous, load-dependent fluctuations of the intermediate circuit cannot cause any torque fluctuations.

If, however, the mains input voltage is variable (e.g., affected by other users), or if the mains voltage at the location of the machine is unknown, dS.03 equal 4, 8 or 12 must be selected.
The programmed limiting characteristic is then always valid for the inverter rated voltage (400V or 230V) and is adjusted proportionately to the voltage.

Figure 7.8.3.2.3 Shift of limiting characteristic

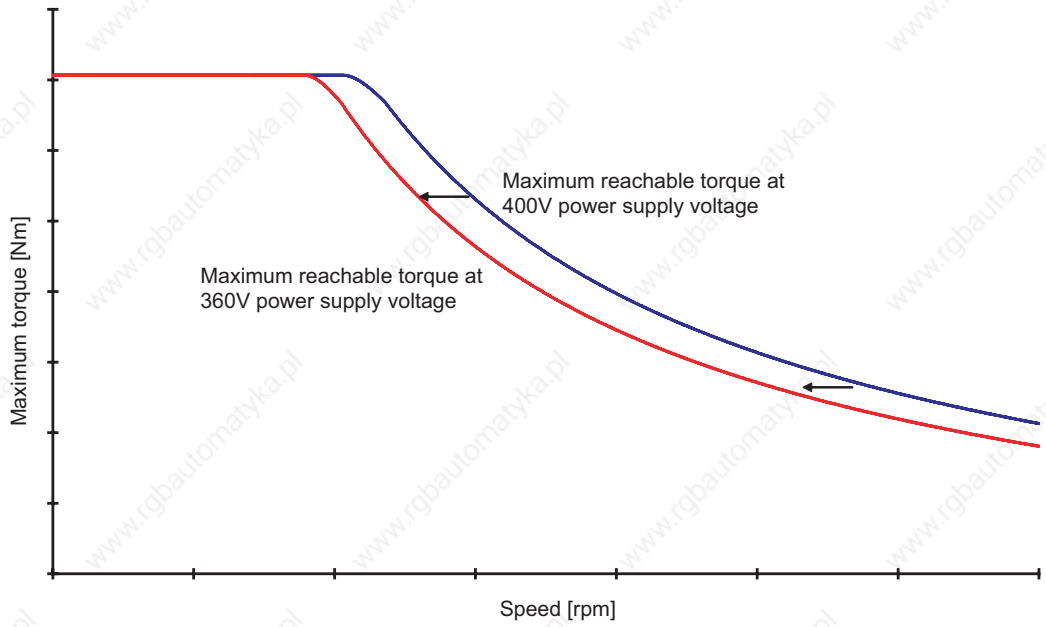

The limiting characteristic must always be programmed beyond the speed range in which the motor is to be operated later. Otherwise, the drive operates in an undefined range at lower DC link voltage values due to the shift of the characteristic to lower speeds.
For value 4 ("on"), the limiting characteristic is shifted in both directions, to lower speeds at lower voltage, and to higher speeds at higher voltages.
At this value, the motor achieves maximum torque. A disadvantage is that the DC link voltage can rise quickly and over a wide range, especially in generating operation. These dynamic changes can cause significant instability in the field weakening range.

Therefore, setting 8 (">Un(FI) = off, quick stop = off") is preferable. Here, only that shift of the characteristic which is physically necessary because of insufficient DC link voltage is carried out.
I.e., the characteristic is shifted only if the DC link voltage is smaller than the rated DC link voltage (= √2 * inverter rated voltage).
If the DC link voltage is greater than the nominal voltage, no shift is applied.

The value 12 (">Un(FI)=off, quick stop=on") can be chosen if the maximum achievable torque should be available for emergency stops. In this mode, the limiting characteristic is shifted to higher speeds at higher DC link voltage only during emergency stop-operation. If possible, the value "8" should generally be selected.

7.8.3.2.4 Effect of the current limit

In the field weakening range, the total current of the motor is comprised of active current and magnetising current. The maximum torque is limited only by the active current.

For some motors, the data sheet lists a maximum current. This applies to both components together. Therefore, the total current can be limited by this parameter.

If both components together exceed the current limit, the magnetising current gets priority.

Attention:
To insure that the speed controller can control the drive, an active current must always be able to flow. The magnetising current limit (dS.13) must therefore always be significantly lower than the maximum current (dr.37). It should maximally be dS.13 = 0,75 x dr.37.

The total current limit dr.37 is activated by bit 0 of the parameter dS.03.

dS.03: Current / torque mode			
Bit	Meaning	Value	Explanation
0	max current / torque mode	0: off	software current limiting off
		1: on	software current limiting on

7.8.4 Setting of the application-dependent torque limits

For some applications, it is not desired to provide maximum possible torque, instead, the application requires other, process-related limits(e.g., protection of mechanical components).
These can be set via parameters cS.19...cS.23. The torque limit characteristic defined via the maximum current and the available voltage always remains active as a superimposed limit.

If only one limit is needed for all operating ranges (clockwise rotation, counter clockwise rotation, motoring and generating), the parameter "absolute torque reference" (cS.19) can be used. All other limits (cS.20...cS.23) must then have the value "-1:off".
If different torque limit are needed, they must be entered in the parameters cS.20...cS.23 (=torque limit for the different operating ranges).
The torque limits can be changed during operation for special applications by multiplying them with a factor of 0..100%.
The parameter "torque reference source" (cS.15) determines how this factor is built for the adjusted torque limits (cS.19...cS.23).

cS.15 Torque reference source	
Value	Explanation
0: Analog REF	Parameter "selection Ref-input / Aux-function" (An.30) determines how the Ref- and Aux-value,respectively, is calculated (see chapter 7.2). By default, AN1 is the Ref- and AN2 is the Aux-value. As multiplier(s) for the torque limit(s), they are limited to 100%.
1: analog Aux	
2: digital absolute (cS.19..23)	the torque limits (cS.19...cS.23) are not attenuated by a factor
3: digital % (cS.18)	cS.18 (percentage torque reference) is the factor for the torque limits (cS.19...cS.23)
4: Motorpoti (ru.37)	the base value of the motor potentiometer function (see chapter 7.15) is the factor for the torque limits (cS.19...cS.23)
5: external PID output (ru.57)	the base value of the PID controller (see chapter 7.15) is the factor for the torque limits (cS.19...cS.23) The base value can be read out in ru.57
6: AN2 direct (+/- 10V)	Analog input value AN2 is the factor for the torque limits (cS.19...cS.23). At this setting, the analog input is scanned and processed on a faster grid. To implement the faster processing, the following parameters have no function: "AN2 noise filter" (An.11), "AN2 offset Y" (An.17), "AN2 zero clamp" (An.14), "AN2 save mode" (An.12). The value of AN2 is limited as a multiplier to 100%.

Example: cS.20 Torque limit forward motor = 20Nm
cS.21 Torque limit reverse motor = 20Nm
cS.22 Torque limit forward gen. = 15Nm
cS.22 Torque limit reverse gen. = 10Nm
cS.15 Torque reference source = 3: digital % (cS.18)
cS.18 Torque reference setting = 50%

Resulting torque limits

Clockwise rotation:	motoring = 10Nm / generating = 7,5Nm
Counter clockwise rotation:	motoring = 10Nm / generating = 5Nm

These limits can be lowered more using the limiting characteristic.

7.8.5 Display of the actual torque values and limits

Parameters ru.11 and ru.12 show the current target and actual torque of the drive, respectively.

In ru.73 and ru.74, the torque in [%] with respect to the parameter "absolute torque reference" (cS.19) is displayed.

The active limits for the current direction of rotation can be read off in the parameters ru.47 "Act. torque limit motor" and ru.48 "Act. torque limit generator". The parameters ru.47 and ru.48 depend on the programmed torque limits, the limiting characteristic, and the current limits (e.g., hardware current limitation or dr.37 "maximum current").

7.8.6 Display of the torque-related motor workload (ru.90)

With ru.90, the utilization of the whole drive can be displayed.
The calculation of ru.90 depends on the mode.

7.8.6.1 Mode 1: "Reference torque" Le 27 = 0

The calculation of ru.90 then follows the formula:

$$ru.90 = \frac{\text{Actual torque display (ru.12)}}{\text{Set torque limit (ru.47}_{\text{motoring}}\text{ respectively ru.48}_{\text{generating}}\text{)}}$$

Figure 7.8.6.1 LE.27 = 0

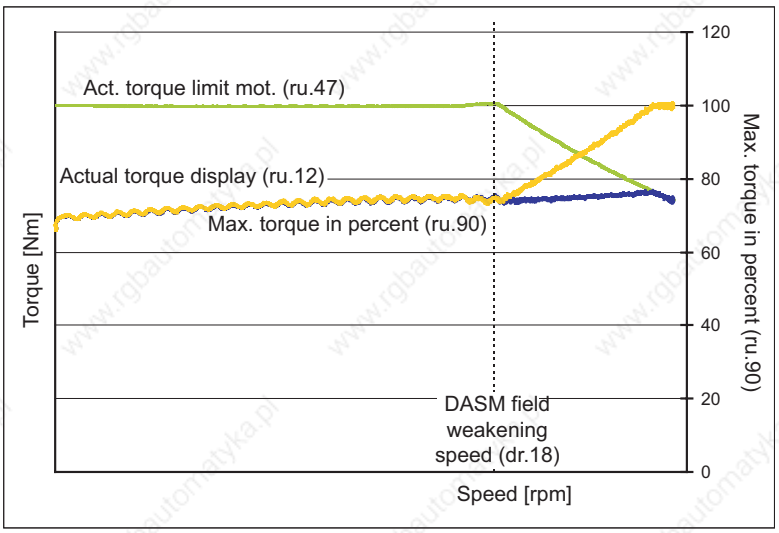

7.8.6.2Mode 2: "Reference torque" Le 27 unequal 0

The maximum thermally permissible torque - i.e., in the base speed range, the rated torque, and the range higher than the rated speed, the rated torque attenuated following a 1/x-function - is taken as 100% utilization of the motor.
The programmed speed-torque characteristic is taken as 100% utilization of the inverter. This is comprised of the torque limit in the cS-parameters (e.g., cS.19) and the limiting characteristic in the dr-parameters (e.g., dr.15...dr.18).

The value set in parameter "reference torque" (LE.27) corresponds to 100% utilization in the application. This could be, e.g., the permanently permissible torque for the attached screw conveyor or gear.

The smallest of the 3 values indicates the torque with which the whole drive can be loaded permanently at the corresponding speed.This torque is the reference torque for the calculation of the parameter "max torque in %" (ru.90).

Figure 7.8.6.2a LE.27 ≠ 0 Reference torque

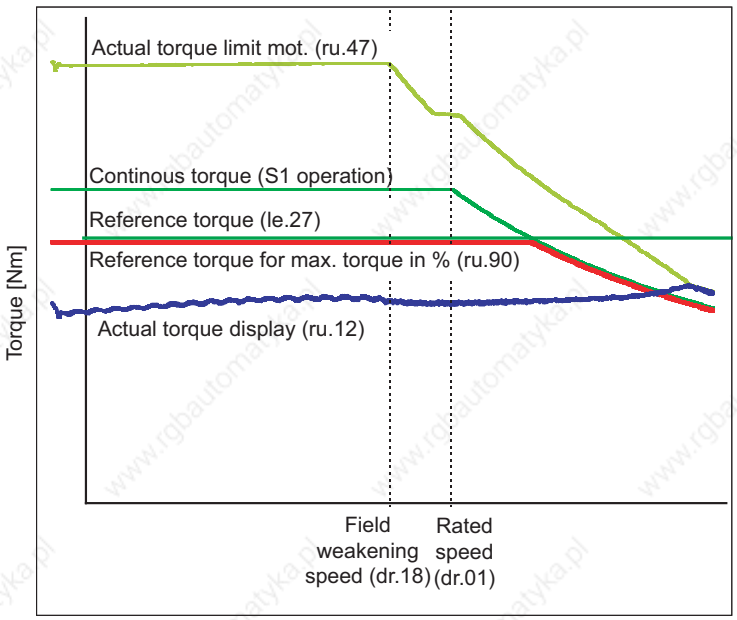

ru.90 is calculated as follows:

Figure 7.8.6.2b Display ru.90

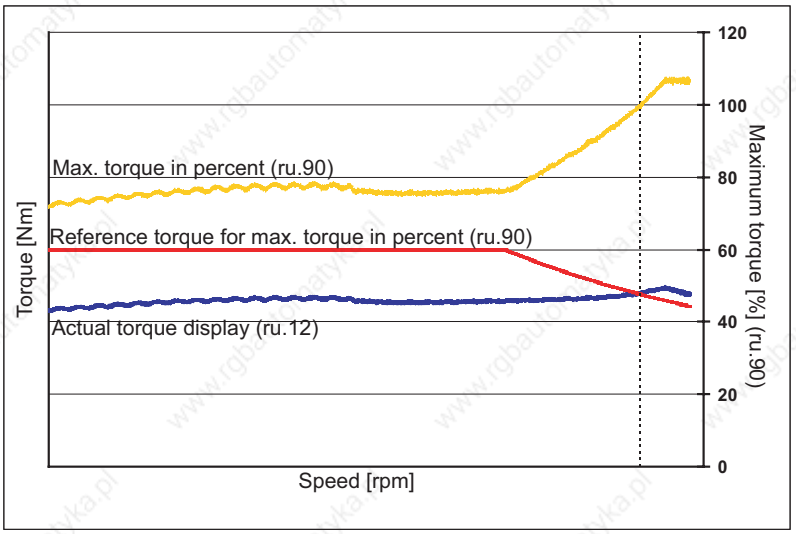

$$ru.90 = \frac{\text{Actual torque display (ru.12)}}{\text{Reference torque for ru.90}}$$

1. Introduction	7.1	Operating and appliance data
2. Summary	7.2	Analog in- and outputs I
	7.3	Digital in- and outputs
3. Hardware	7.4	Setpoint-, rotation- and ramp adjustment
4. Operation	7.5	Motor data and controller adjustments of the asynchronous motor
5. Selection of Operating Mode	7.6	Motor data and controller adjustments of the synchronous motor
	7.7	Speed control
6. Initial Start-up	7.8	Torque display and -limiting
7. Functions	7.9	Torque control 7
	7.10	Current control, -limiting and switching frequencies
8. Error Assistance	7.11	Speed measurement
9. Project Design	7.12	Positioning and synchronous control
10. Networks	7.13	Protective functions
	7.14	Parameter sets
11. Parameter Overview	7.15	Special functions
12. Annex	7.16	CP-Parameter definition

7.9.1. Torque reference source ..... 7.9 - 3

7.9.2. Rate of change torque reference ..... 7.9 - 3

7.9.3. Speed calculation ..... 7.9 - 4

7.9.4. Control mode ..... 7.9 - 4

7.9.4.1 Mode 1: torque-controlled operation with emergency switching to speed control ..... 7.9 - 4

7.9.4.2 Mode 2: torque-controlled operation with superimposed speed control ..... 7.9 - 5

7.9 Torque control

In torque-controlled operation, the user directly specifies the torque the motor is to deliver, until the speed target value is reached.

7.9.1. Torque reference source

The set torque is calculated from the value in parameter cS.19 multiplied by a factor (0..100%) that can be taken from various sources (analog inputs, motor potentiometer, etc.). The torque setpoint source is selected with parameter cS.15.

cS.15 Torque reference source	
Value	Explanation
0: Analog REF	Parameter "selection Ref-input / Aux-function" (An.30) determines how the Ref- and Aux-value, respectively, is calculated (see chapter 7.2). By default, AN1 is the Ref- and AN2 the Aux-value. As a multiplier for cS.19, they are limited to 100%.
1: analog Aux	
2: digital absolute (cS.19..23)	the value in cS.19 directly provides the torque reference
3: digital % (cS.18)	cS.18 is the factor for cS.19
4: Motorpoti (ru.37)	the base value of the motor potentiometer function (see chapter 7.15) serves as the factor for the torque limit (cS.19..cS.23)
5: external PID output (ru.57)	the base value of the PID controller (see chapter 7.15) is the factor for cS.19 The base value can be read off of ru.57
6: AN2 direct (+/- 10V)	The analog input value AN2 is the factor for cS.19. At this setting, the analog input is scanned and processed on a faster grid. To implement the faster processing, the following parameters have no function: "AN2 noise filter" (An.11), "AN2 offset Y" (An.17), "AN2 zero clamp" (An..14), "AN2 save mode" (An.12). The value of AN2 is limited as a multiplier to 100%.

The overriding torque limitations, like "max. torque FI" (dr.15) remain in effect.

7.9.2. Rate of change torque reference

With cS.16 the rate of change of the torque reference can be limited.

cS.16: Torque acceleration time	
Value	Explanation
0: off	torque reference is applied directly without ramp
1..60000 ms	The maximum rate of change for the torque reference equals the motor-rated torque per adjusted ramp time (CS.16).

7.9.3. Speed calculation

The setpoint speed according to the ramp generator (ru.02) is used for speed limiting.
The setpoint speed is formed (with exception of the direction of rotation) exactly as in the vector controlled and open loop operation, respectively. The direction of rotation is indicated by the sign of the torque reference.
Without limiting the speed, the drive would accelerate to indefinitely high speeds if the counter torque disappears.

Since the limiting is based on the speed at the ramp generator output, the acceleration-/deceleration ramps should be set to 0 s for this operating mode.

7.9.4. Control mode

For the torque-controlled operation, 2 different modes exist that can be selected with cS.00 = 5 or cS.00 = 6 .

7.9.4.1 Mode 1: torque-controlled operation with emergency switching to speed control

This mode is activated via cS.00 = 5.

The speed controller is not active as long as the drive does not exceed the maximum speed for torque-controlled operation (= setpoint speed ru.02) .
This has the advantage that the parametrisation of the speed controller has no effect on the set torque.
The switch to vector controlled operation happens only on reaching the speed limit. The switching causes suboptimal controller behaviour and overshoots can occur.

Figure 7.9.4.1 Mode 1

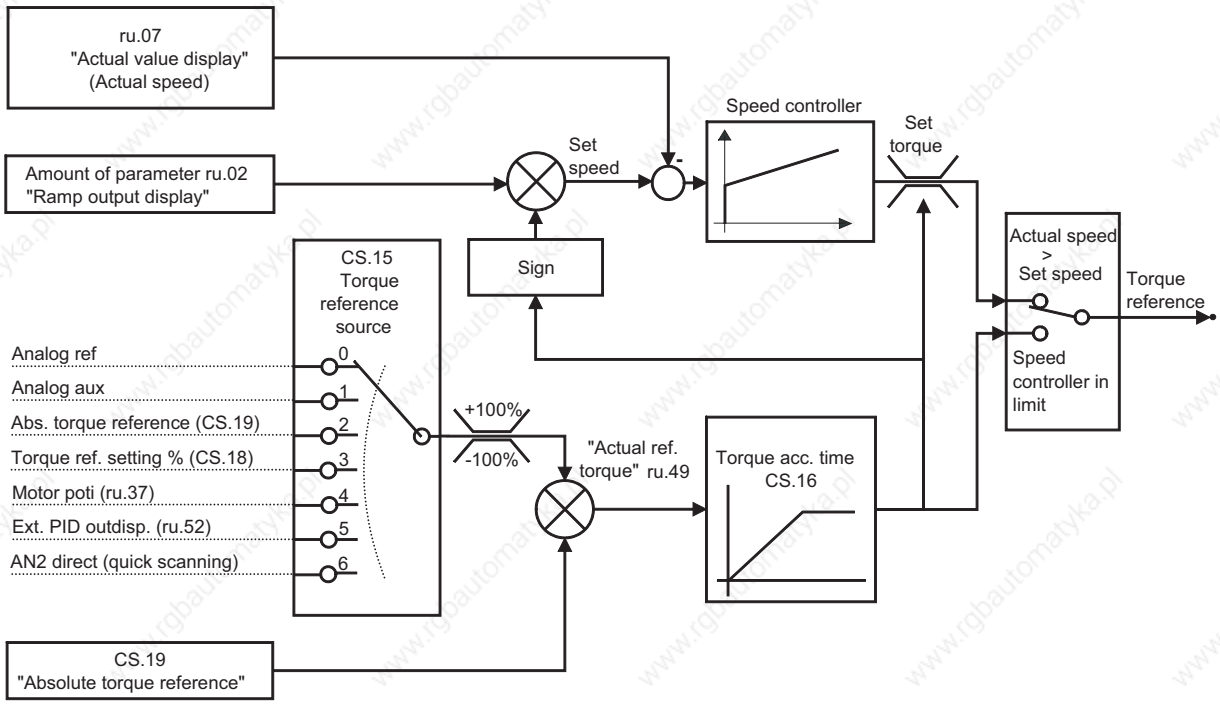

7.9.4.2Mode 2: torque-controlled operation with superimposed speed control

This mode is activated via cS.00 = 6.

The speed controller is permanently active, but the limit of the controller is always set equal to the torque reference.
As long as the drive does not exceed the maximum speed for torque-controlled operation (= setpoint speed ru. 2), the speed controller is within the limits, i.e., its output signal is equal to the torque reference.
This mode has<the advantage that the speed controller is always active, leading to better behaviour when reaching the maximum speed .
The disadvantage is that with an unfavorable parametrisation of the speed controller (e.g., very small amplification chosen), the torque reference can be further delayed by the controller. I.e., even if the ramp time is cS.16 = 0:off, the speed controller must first run to the new limit value after an increase of the torque reference .

Figure 7.9.4.2 Mode 2

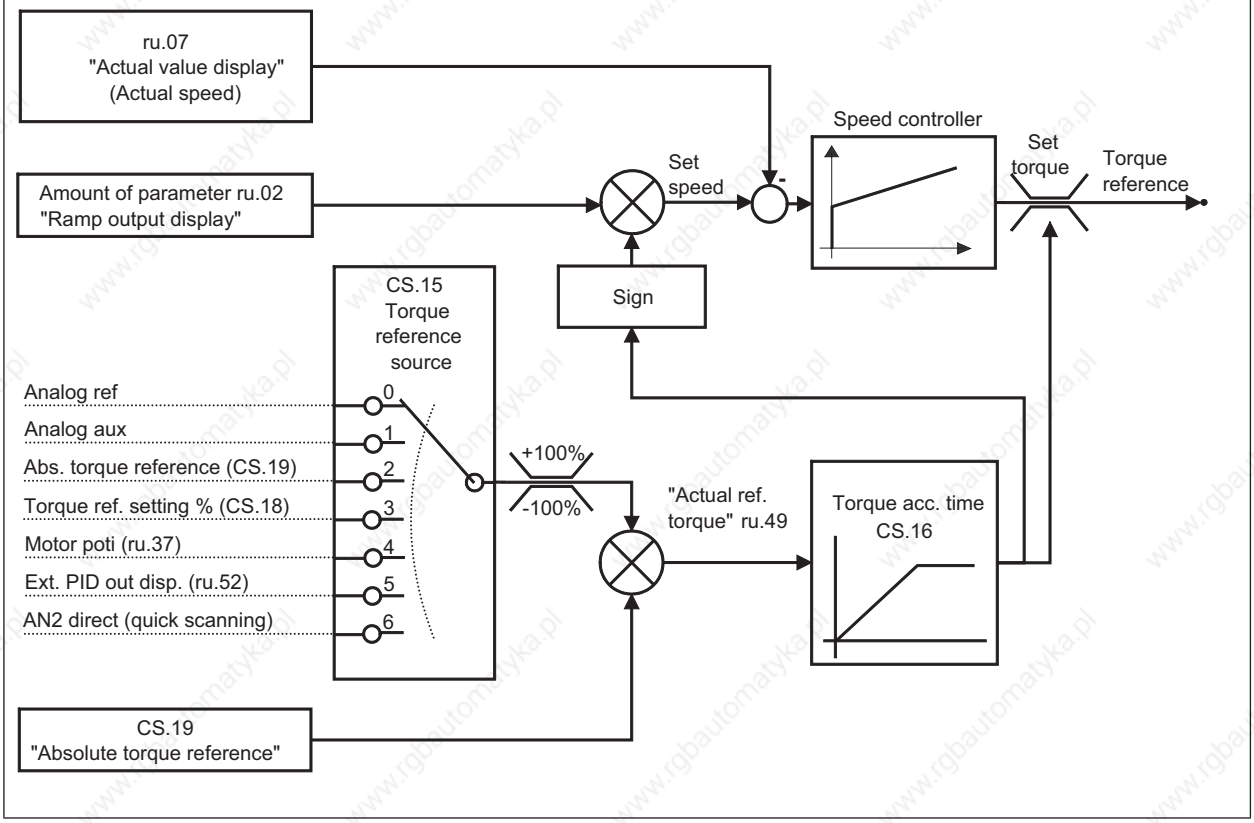

7

1. Introduction	7.1	Operating and appliance date
2. Summary	7.2	Analog in- and outputs I
3. Hardware	7.3	Digital in- and outputs
4. Operation	7.4	Setpoint-, rotation- and ramp adjustment
5. Selection of Operating Mode	7.5	Motor data and controller adjustments of the asynchronous motor
6. Initial Start-up	7.6	Motor data and controller adjustments of the synchronous motor
7. Functions	7.7	Speed control
8. Error Assistance	7.8	Torque display and -limiting
9. Project Design	7.9	Torque control
10. Networks	7.10	Current control, -limiting and switching frequencies
11. Parameter Overview	7.11	Speed measurement
12. Annex	7.12	Positioning and synchronous control
	7.13	Protective functions
	7.14	Parameter sets
	7.15	Special functions
	7.16	CP-Parameter definition

7.10.1 Current control ..... 7.10 - 3

7.10.2. Current limit ..... 7.10 - 4

7.10.3 Switching frequencies and derating ..... 7.10 - 5

7.10.3.1 Switching frequency (uF.11, In.03, In.04, ru.45) ..... 7.10 - 5

7.10 Current control, -limiting and switching frequencies

7.10.1 Current control

Current controller (dS.00 „KP current“, dS.01 „KI current“) are automatically pre-charged by operation of Fr.10 by means of equivalent circuit data.
The controller parameters are calculated from the equivalent circuit data.
The current decoupling must be activated for an optimal control characteristic.At the asynchronous motor it is differentiated between "1: on "and "2: on, without main inductance".
Mode 2 (without main inductance) must be used if strong DC link voltage fluctuations occur (e.g. at compliant supply or spindle motors). The complete decoupling can lead to boosted current oscillation.
Otherwise mode „1: on“ for synchronous and asynchronous motor must be selected.

dS.02: Current decoupling	
Value	Explanation
0: off	Current decoupling off
1: on	Current decoupling on
2: on, without main inductance (ASM)	partial current decoupling (mode only for asynchronous motors at unsteady DC link voltage)

Exception: The controller parameters are only calculated depending on the motor type plate data at speed controlled operation of an asynchronous motor without motor model. These adjustments are default values for standard motors and they are not suitable for special motors (e.g. high and medium frequency motors). A manual adaption must be made here.

A current decoupling is also not possible since the equivalent circuit data are unknown. Parameter ds.02 must set to value 0.

dS.03: Current / torque mode			
Bit	Meaning	Value	Explanation
4	Current controller/ priority assignment (ASM)	0: off	
		16: on	Activation of the active current controller-priority in the regenerative range

Attention: A change of bit 4 in parameter ds.03 is usually not necessary and should be done only by authorized KEB service personnel.

The active current controller can get priority in generatoric operation with bit 4 of parameter ds.03. In special applications this is of advantage for the quality of the current control.

7.10.2. Current limit

The hardware current limit becomes active, if the phase current exceeds the value in In.18 „hardware current inverter“.
Through short-time power shutdown the current limit can avoid short current peaks at small speed, e.g. when starting the motor.
However if the current level is exceeded at high speed under load, disconnection of the voltage leads to a reduction of the breakdown torque of the motor and thus to a "fall back" of the motor. The motor model is also invalid. Therefore this function should be switched off for controlled drives.

Attention: The hardware current limit limits the current at the limit and releases no error. This can lead to torque sags at the motor shaft. This function is very critical especially at the operation "hoist and lowering". Because the drive can sag caused by missing torque, without brake engage.

Sole exception: Current overshoots can occur during the start in speed controlled operation with encoder feedback without motor model if the current controllers are not optimal adjusted. They can be absorbed with uF.15 = 1: "single-phase mode".The hardware current limiting makes sense also at controlled drives.

uF.15 Hardw. curr. lim. mode	
Value	Explanation
0	Off: recommended adjustment at controlled operation
1	Single-phase mode: limits the current reliably, but deep current engage
2	Zero vector mode: lower current engage, but overcurrent errors can occur in unusual cases.

The software current limiting should be used instead of the hardware protective function. The maximal permissible current must be entered in parameter dr.37.
It is reasonable to enter the hardware current level (In.18) here if the application does not require another value.
The function is activated by setting "curr./torq.mode = 1: on" in parameter (ds.03).

dS.03: Current / torque mode			
Bit	Meaning	Value	Explanation
0	Maximum current mode	0: off	
		1: on	Activation of the software current limiting

7.10.3 Switching frequencies and derating

7.10.3.1 Switching frequency (uF.11, In.03, In.04, ru.45)

The desired switching frequency can be selected in parameter uF.11. The higher the switching frequency the smaller the noise level and the smaller the current ripple and the losses in the motor involved. Simultaneously the losses in the inverter and also the isolation straining of the motor increase caused by switching edges.

uF.11 Carrier frequency	
Value	Frequency
0	2 kHz
1	4 kHz
2	8 kHz
3	12 kHz
4	16 kHz

The current ripple is a harmonic current which superimposes the sine-wave output current.
It is generated by the clocked output voltage of the frequency inverter. This ripple increases the maximum value of the current and this can release an overcurrent error or hardware current limit, although the displayed apparent current (ru.15) and/or the actual utilization value (ru.13) is clearly below this limits.

Picture 7.10.3.1 Switching frequencies

Base frequency of the phase current

actual current = base frequency with superimposed ripple

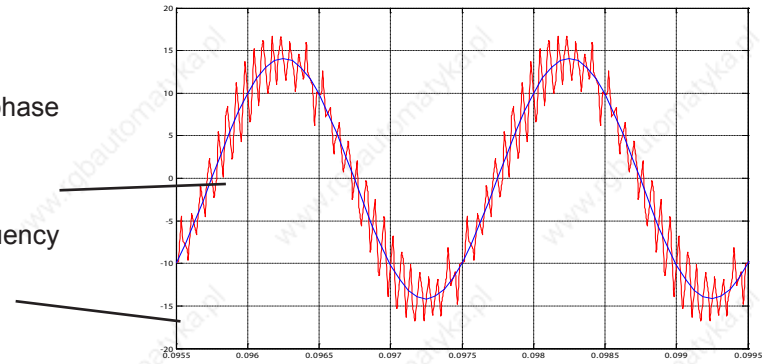

The size of the current ripple is depending on the switching frequency and the motor inductance. The current ripple is usually insignificant for standard motors with a power < 50kW and a rated switching frequency of the unit of min. 4 kHz.
The smaller the leakage inductance (ASM) and/or the winding inductance (SM) the higher the ripple. This is especially the case at motors with high power or spindle motors. Therefore the switching frequency must be selected as high as possible for these motors.

Attention: Generally the switching frequency should be at least 10 times higher than the maximally occuring output frequency of the inverter.

The maximum switching frequency can be read off in parameter In.03. The frequency inverter can be operated permanently only with its rated carrier frequency (In.04) (independent on temperature and utilization).
If a switching frequency is selected in parameter uF.11 which is higher than the rated value, an automatic "derating" i.e. a reduction of the switching frequency occurs depending on temperature, output frequency and utilization of the inverter. This carrier frequency change-over is generally not good for the control response of the drive. Therefore the carrier frequency uF.11 should be equal to the rated carrier frequency. However the effects of the deratings can be neglected in many applications.

1. Introduction	7.1 Operating and appliance data
2. Summary	7.2 Analog in- and outputs I
	7.3 Digital in- and outputs
3. Hardware	7.4 Setpoint-, rotation- and ramp adjustment
4. Operation	7.5 Motor data and controller adjustments of the asynchronous motor
5. Selection of Operating Mode	7.6 Motor data and controller adjustments of the synchronous motor
	7.7 Speed control
6. Initial Start-up	7.8 Torque display and -limiting
7. Functions	7.9 Torque control
	7.10 Current control, -limiting and switching frequencies
8. Error Assistance	7.11 Speed measurement
9. Project Design	7.12 Positioning and synchronous control
10. Networks	7.13 Protective functions
11. Parameter Overview	7.14 Parameter sets
	7.15 Special functions
12. Annex	7.16 CP-Parameter definition

7.11.1 Designs ..... 7.11 - 3

7.11.2 Encoder interface channel 1 (X3A) ..... 7.11 - 4
7.11.2.1 TTL incremental encoder input (standard at F5-M) ..... 7.11 - 4

7.11.3 Encoder interface channel 2 (X3B) ..... 7.11 - 6
7.11.3.2 Incremental encoder output ..... 7.11 - 7

7.11.4 Voltage supply of encoder ..... 7.11 - 8

7.11.5 Selection of encoder ..... 7.11 - 8

7.11.6 Encoder identifier ..... 7.11 - 10

7.11.7 Basic settings ..... 7.11 - 11

7.11.8 Gear factor ..... 7.11 - 12
7.11.8.1 Definition ..... 7.11 - 12
7.11.8.2 Gear factor / analog setting ..... 7.11 - 14
7.11.8.3 Gear factor / set-programming ..... 7.11 - 15

7.11.9 Operation mode output ..... 7.11 - 16

7.11.10 System offset (Ec.33 / Ec.34) ..... 7.11 - 17

7.11.11 Further parameters / encoder ..... 7.11 - 17
7.11.11.1 SSI encoder at channel 1 ..... 7.11 - 17
7.11.11.2 SSI encoder at channel 2 ..... 7.11 - 17
7.11.11.3 SSI position standardization channel 1 and 2 (Ec.41) ..... 7.11 - 18
7.11.11.4 Tachometer at channel 2 ..... 7.11 - 19
7.11.11.5 Evaluation intelligent interface ..... 7.11 - 19
7.11.11.6 Encoder over gear (ec.39) ..... 7.11 - 23

7.11 Speed measurement

7.11.1 Designs

The KEB COMBIVERT F5 supports two from each other separated encoder channels. Each encoder channel can support following interface dependent on the available hardware:

Encoder channel 1 (X3A)
- is a 15 pole incremental encoder input for rectangular signals

Encoder channel 2 (X3B) can support following interfaces
- 9 pole incremental encoder input for rectangular signals
- Incremental encoder output
- Incremental encoder in-/output

Further Interfaces (describes in separate manuals)
- Synchronous serial interface (SSI)
- Tachometer input
- Initiator input
- Hiperface
- Endat
- SinCos

7.11.1 Encoder interfaces

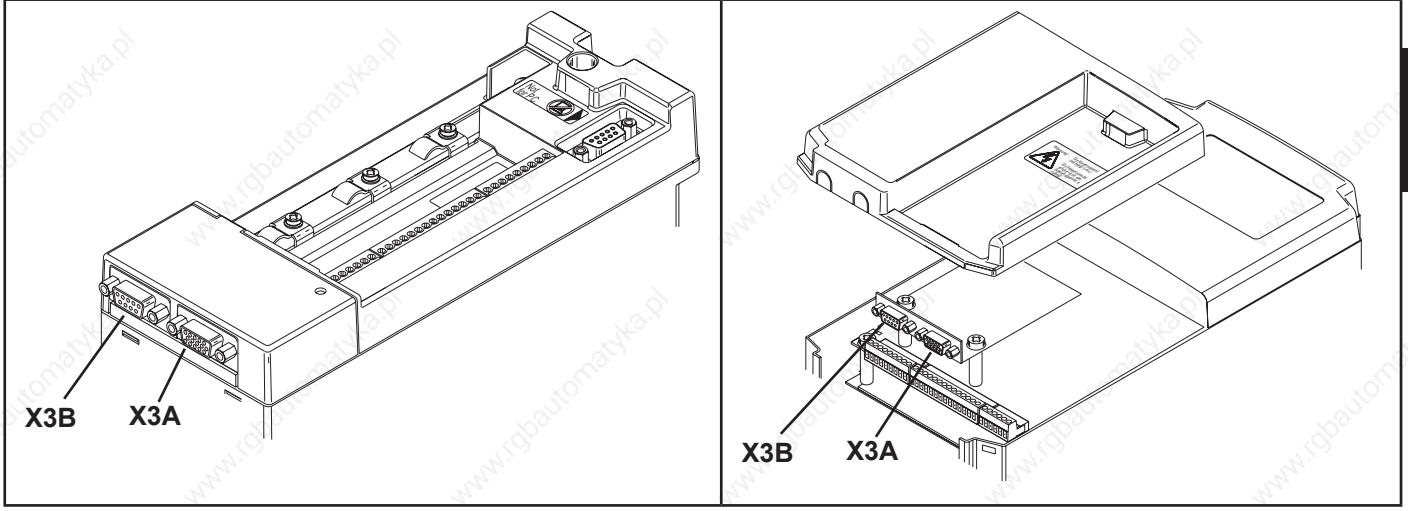

7.11.2 Encoder interface channel 1 (X3A)

7.11.2.1 TTL incremental encoder input (standard at F5-M)

Fig. 7.11.2 Encoder Interface Channel 1 (X3A)

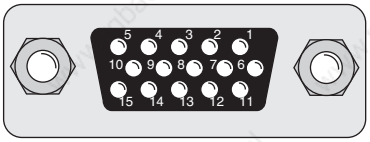

Only when the inverter is switched off and the voltage supply is disconnected may the plug be pulled out or plugged in!

Signal	X3A	Description
U_{var}	11	Supply voltage for encoder
+5 V	12	Supply voltage for encoder
0 V	13	Reference potential
A	8	Signal input A
$\overline{A}$	3	Signal input A inverted
B	9	Signal input B
	4	Signal input B inverted
n	15	Reference marking input N
	14	Reference marking input N inverted
Shield	housing	shielding

Following specifications apply to the encoder interface 1 (X3A):

- Limiting frequency of input fG = 300 kHz
- internal terminating resistor Rt = 150 ohm
- 2…5 V High level at rectangular signals

Inputs

The signal and reference marking inputs can be triggered with rectangular pulses. The signal inputs must generally be connected. The reference marking signals are only needed for the reference point approach in the positioning operation (F5M/S).

Please contact KEB regarding encoder inputs with HTL level!

Fig.7.11.2.a Resolver interface channel 1 (X3A)

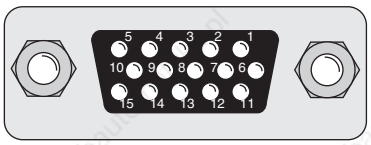

Only when the inverter is switched off and the voltage supply is disconnected the plugs may be pulled out or plugged in!

Signal	X3A	KEB servo motor	Description
SIN -	3	1	Sinus signal cable inverted
SIN+	8	10	Sinus signal cable
REF-	5	5	Reference signal inverted
REF+	10	7	Reference signal
COS-	4	2	Cosinus signal cable inverted
COS+	9	11	Cosinus signal cable
GND	14	-	Shielding of the signal cables
Shield	housing	housing	shielding of the hole cable

Fig. 7.11.2.b Resolver connector at the KEB servo motor

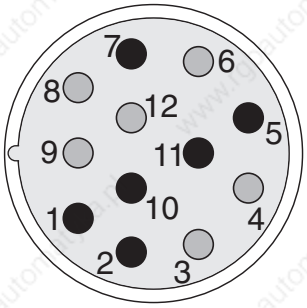

Fig. 7.11.2.c Resolver cable

housing			housing		Core color
			14	GND	
SIN-	1		3	SIN -	red
SIN+	10		8	SIN+	blue
REF-	5		5	REF-	yellow
REF+	7		10	REF+	green
COS-	2		4	COS-	pink
COS+	11		9	COS+	gray

7

7.11.3 Encoder interface channel 2 (X3B)

Fig. 7.11.3 Encoder interface channel 2 (X3B)	
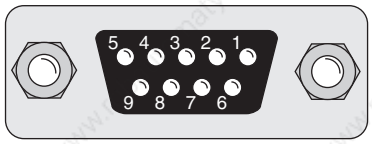	**Only when the inverter is switched off and the voltage supply is disconnected may the plug be pulled out or plugged in!**

Channel 2 can be equipped with different interfaces. To avoid the connection of a wrong encoder, the installed interface is indicated in ec.10.

Definition of the interface (Ec.10)

Channel 2 can be equipped with different interfaces. To avoid the connection of a wrong encoder, the installed interface is indicated in Ec.10.

In synchronous operation the second incremental encoder serves as input of the master drive. A second position encoder can be connected for positioning operation.

Signal	X3B	Description
U_{var}	5	Supply voltage for encoder (see 7.11.2)
+5,2V	4	Supply voltage for encoder (see 7.11.2)
0 V	9	Reference potential
A	1	Signal input A
$\overline{A}$	6	Signal input A inverted
B	2	Signal input B
$\overline{B}$	7	Signal input B inverted
n	3	Reference marking input N
$\overline{N}$	8	Reference marking input N inverted
Shield	housing	shielding

The signal inputs of the second encoder interface support only rectangular signals.

Following specifications apply to the encoder interface 2 (X3B):

- Limiting frequency of input $f_G = 300\,kHz$
- $_{\text{internal terminating resistor}}\,R_t = 150\,\Omega$
- 2…5 V High level at rectangular signals

7.11.3.2 Incremental encoder output

The incremental encoder output gives out the signals recorded at the encoder interface 1:1 in RS422-specification over the second channel (e.g. master drive in synchronous operation).

Signal	X4A	Description
U_{var}	5	Supply voltage for encoder (see 7.11.2)
+5,2V	4	Supply voltage for encoder (see 7.11.2)
0 V	9	Reference potential
A	1	Signal input A
$\overline{A}$	6	Signal input A inverted
B	2	Signal input B
$\overline{B}$	7	Signal input B inverted
n	3	Reference marking input N
$\overline{N}$	8	Reference marking input N inverted
Shield	housing	shielding

Encoder operating mode (Ec.20)

The function of the encoder interfaces is defined with parameter Ec.20.

Ec.20: Encoder operating mode			
Bit	Description	Value	Function
1	Channel 2 Function	0	Incremental encoder input
		1	Incremental encoder output
2	Terminating resistor at channel 2	0	Input with terminating resistor
		2	Input without terminating resistor

Encoder alarm mode (Ec.42)

Parameter Ec.42 determines the alarm function for the two channels.

Ec.42: Encoder alarm mode			
Bit	Description	Value	Function
0…1	Alarm channel 1	0	off
		1	on
		2	on (open-loop)
		3	Warning
2…3	Alarm channel 2	0	off
		4	on
		8	on (open-loop)
		12	Warning

7.11.4 Voltage supply of encoder

Fig. 7.11.4 Voltage supply

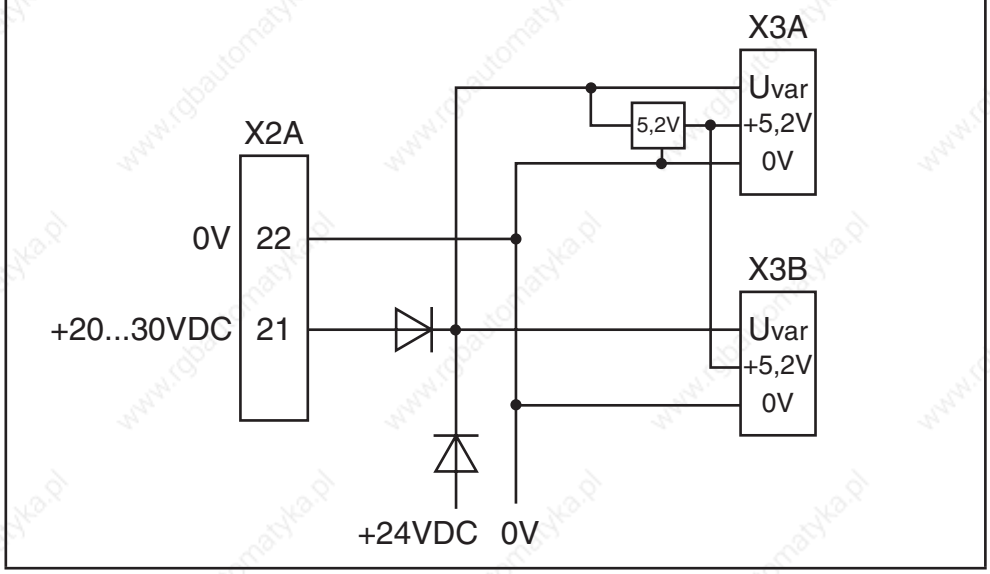

$_{U}$var , +5 V

Uvar is a non-stabilized voltage, which is made available from the power circuit of the KEB COMBIVERT. Depending on the unit size and the load it can be 15...30 V DC. Uvar can be loaded at X3A and X3B altogether with max.170 mA. If higher currents are required for the supply of the incremental encoder, the FI must be supplied with an external voltage.

The +5,2 V voltage is a stabilised voltage, which at X3A and X3B is loadable with altogether 500 mA. Since the +5,2 V are generated from Uvar, the current from Uvar decreases in accordance with following formula:

$$I_{var} = 170\ mA - \frac{5{,}2\ V \times I_{+5V}}{Uvar}$$

7.11.5 Selection of encoder

Precondition for a good control characteristics of a drive is not at least a question of the selection and the correct connection of the encoder.
The selection of the encoder often depends on different criteria. In order to simplify the selection the following table is valid.

Encoder	Resolution	„Speed feedback“	„Abs. value and rotor position encoder for DSM“	Multi-Turn	„Motor data storable in the enco-der“	Number of con-ductors	„Max. line length“
„Incremental TTL with 10 - 30V supply“	high	yes	no	no	no	8	high
„Incremental TTL with 5V supply“	high	yes	no	no	no	8	Standard
Incremental HTL	high	yes	no	no	no	8	very high
„Incremental HTL without invers signals“	Standard	yes	no	no	no	5	Standard
Resolver	Standard	yes	yes	no	no	6	high
ENDAT	very high	yes	yes	no	yes	10	high
EnDat Low cost	high	yes	yes	no	yes	10	high
Endat Multiturn	very high	yes	yes	yes	yes	10	Standard
EnDat 2.2 / BISS	very high	yes	yes	no	yes	6	Standard
Hiperface	very high	yes	yes	no	yes	6	high
Hiperface multiturn	very high	yes	yes	yes	yes	6	Standard
Sin/Cos	very high	yes	no	no	no	8	Standard
SIN/COS with absolute track	very high	yes	yes	no	no	12	Standard
SIN/COS with SSI	very high	yes	yes	no	no	10	Standard
SSI	Standard	limited1	only abso-lute	no	no	6	Standard
SSI multiturn	Standard	limited1	only abso-lute	yes	no	6	Standard

[1] SSI encoder often have a high time constant for the internal position detection.
Thus they are not suitable for speed measurement of dynamic systems.

Detailed data can be taken from the instruction manual of the respective encoder interface and from the data sheet of the encoder.

7.11.6 Encoder identifier

Prior to start-up the inverter must be adapted to the encoder(s) which is/are used.

Encoder interface 1 / 2 (Ec.00, Ec.10)

Ec.00 displays the installed encoder interface 1; Ec.10 displays theencoder interface 2. The values correspond to following interfaces:

Ec.00, Ec.10: Encoder interface 1/ 2	
Value	Description
0	no
1	TTL-Incremental encoder input
2	Incremental encoder output 5 V TTL
3	Incremental encoder input and output direct (non-divisible with Ec.27; switchable with Ec.20)
4	Incremental encoder input and output TTL (switchable with Ec.20)
5	Initiator
6	Synchronous serial interface (SSI)
7	Resolver
8	Tacho
9	Incremental encoder output TTL (from resolver over channel 2)
10	Incremental encoder output TTL
11	Hiperface
12	Incremental encoder input 24 V HTL
13	Incremental encoder input TTL with error detection
14	SinCos encoder input
15	Incremental encoder input 24 V HTL with error detection (push-pull)
16	ENDAT
17	Incremental encoder input 24 V HTL with error detection
18	Analog option ±10 V
19	Reslover
20	SSI sincos
21	Overspeed limiter
22	UVW-Interface
23	Inc. simulation 10-30V
24	Inc. simulation 10-30V
25	Overspeed limiter HTL
26	Inc. input TTL with error detection 5V supply terminal

In case of an invalid encoder identification, error „E.Hyb“ is indicated and the measured value is displayed inverted in Ec.00/Ec.10.
On changing the encoder interface the error „E.HybC“ is indicated. By writing on parameter Ec.00 or Ec.10 the change is confirmed and the default values for the new interface are loaded.

7.11.7 Basic settings

Adjust increments per revolution (Ec.01, Ec.11)

With this parameter the encoder line number is adjusted to the connected encoder within a range of 1…16383.

- Ec.01 for encoder interface 1
- Ec.11 for encoder interface 2

Incremental pulses are generated by the evaluation block for resolver which does not supply incremental pulses. The number of the generated pulses is displyed in Ec.01 in this case.

Time 1 (2) for speed calculation (Ec.03, Ec.13)

This parameter defines the time over which the speed average value is determined. At that the resolution of the speed detection is defined simultaneously:

Ec.03, Ec.13: Speed sampling time		
Value	Scan time	Speed resolution when using an incremental encoder with 2500 pulses
0	0,5 ms	12 rpm
1	1 ms	6 rpm
2	2 ms	3 rpm
3	4 ms	1,5 rpm (factory setting)
4	8 ms	0,75 rpm
5	16 ms	0,375 rpm
6	32 ms	0,1875 rpm
7	64 ms	0,09375 rpm
8	128 ms	0,046875 rpm
9	256 ms	0,0234375 rpm

When using other line numbers:

$$\text{Speed resolution} = \frac{\text{Specified speed resolution} \times 2500}{\text{Line number}}$$

Rotation change (Ec.06, Ec.16)

A rotation change for encoder input 1 can be executed with Ec.06 bit 0...1 and for encoder input 2 with Ec.16. A system inversion can be activated with bit 4 (value 16). With the system inversion it is possible to run the motor counter-clockwise at the shaft with positive pre-settings without changing the hardware.

The following adjustments are possible:

Ec.06, Ec.16: Encoder track change	
Value	Function
	Direction of rotation
0	no change
1	Inverted
2	depends on the sign of the actual frequency (initiator)
3	depends on track B (initiator terminal 4)
4-15	reserved
	Encoder system
0	no
16	Inverted

Encoder trigger (Ec.07, Ec.17)

Value	Evaluation of the encoder signals
0	1-fold (for initiator: evaluation of positive edges only) (2^0)
1	2-fold (for initiator: evaluation of positive and negative edge)(2^1)
2	4-fold (for incremental encoder) (2^2) default
3	8-fold (23)
4	16-fold (24)
5	32-fold (25)
6	64-fold (26)
...	...
13	8192-fold (213)

7.11.8 Gear factor

7.11.8.1 Definition

The gear factor (ratio drive speed tooutput speed) is defined by two parameters: gear factor numerator and gear factor denominator

$$\text{Gear factor} = \frac{\text{Counter}}{\text{Numerator}}$$

For every encoder channel, a gear factor can be given. Ec.04 / 05 or Ec.56 / 57 defines the gear factor for channel 1. Ec.14 / 15 or Ec.58 / 59 defines the gear factor for channel 2.
In the second parameter pair (EC.56 / 57 and Ec.58 / 59, respectively), the gear factor can be set with a higher resolution and a greater value range.
Which parameter pair defines the gear factor is determined by the parameter "gear factor counter long" (Ec.56 for channel 1 respectively Ec.58 for channel 2).
If this parameter contains a value not equal to "0:off" for the respective channel, the "long" gear factors apply.
Overview of the parameters for gear factor setting:

Parameter	Description	Value range	Default value
Ec.04	gear 1 numerator	-30000…30000	1000
Ec.05	gear 1 determinator	0...30000	1000
Ec.56	Gear 1 numerator long	-1073741824...off...1073741823	off
Ec.57	Gear 1 denominator long	0…10741823	1000
Ec.14	Gear factor channel 2 counter	-30000…30000	1000
Ec.15	gear 2 determinator	0...30000	1000
Ec.58	Gear 2 numerator long	-1073741824...off...1073741823	Off
Ec.59	Gear 2 denominator long	0…1073741823	1000

Setting a gear factor is necessary in the following applications:

- Motor encoder connection via a gear

  If the speed sensor for the motor speed cannot be connected directly to the motor shaft, the gear ratio between motor and speed sensor must be set.
- Use of a resolver with a pole-pair number greater than 1

  By default, the use of resolvers with pole-pair number 1 is assumed. If other types are to be used, the different pole-pair number is treated like a gear factor. The ratio of gear factor denominator to gear factor numerator must be set equal to the pole-pair number. If different synchronous motor are to be used in this set-up, it must be ascertained that the value pole-pair number x gear factor is integer (see below: example 1).
- Synchronous running

  For synchronous control, the gear ratio between master and slave drive must be known to the inverter (see chapter 7.12.3.3 synchronous mode / position normalisation)
- Positioning

  The gear factor is needed if control is not directly by motor position, but the position encoder is connected with a gear (see chapter 7.12.4.3 position normalisation).
- Adaption of special encoder

  The maximum value for the number of increments per revolution of an encoder that can be entered in Ec.01 or Ec.11 is 65535. The permissible maximum number of increments per revolution may be smaller (for Sin/Cos encoders, e.g., 2048), depending on the interface type. By using the gear factor, encoders with more increments per revolution can be used (see below: example 2). This adaption is not always feasible and introduces limitations (e.g., no approach to reference point in response to the encoder-zero impulse possible).

The main uses of the gear factor occur in the operating modes positioning and synchronous running. The effect of the gear factor and the correct settings for the various mechanical set-ups are described in more detail in chapters 7.12.3.3 and 7.12.4.3 .

Examples for the special case of encoder adaption via the gear factor are listed below:

Example 1: 3, pole-pair resolver on channel 1

Pole-pair number of the resolver = 3, pole-pair number of the synchronous motor = 3
ratio gear factor denominator to gear factor numerator must be equal to the pole-pair number

Ec.05 Gear 1 denominator = 3000
Ec.04 Gear 1 numerator = 1000
Ec.39 Encoder 1 over transmission = 1

For the operation of encoders thar are not directly mounted to the motor or for the operation of resolvers with a pole-pair number > 1, parameter Ec.39 must be set to „1: motor encoder“.

The gear factor is 1/3, the pole-pair number of the motor = 3
Gear factor x pole-pair number of the motor = 1
=> synchronous motor can be operated in this set-up .

Example 2: Use of an encoder with too many increments per revolution

Encoder channel 1 is connected to a Sin/Cos encoder with 45000 increments.
The maximum value for Ec.01 for this interface type is 2048.
The increments per revolution are therefore split into 45000 = 1800 x 25.
The value 1800 is set as increments per revolution, the value 25 is set as gear factor.

Ec.01 Encoder (inc/r) 1 = 1800
Ec.04 Gear 1 numerator = 1 (must contain the value 1)
Ec.05 Gear 1 denominator = 25
Ec.39 Encoder 1 over transmission = "2 Ec.1 x E. 5 (1 zero impulse per revolution)"

For this special operation (splitting the real increments per revolution into gear factor denominator and increments per revolution) Ec.39 must be set to 2.
This special operation is only available for channel 1.

7.11.8.2 Gear factor / analog setting

The gear factor numerator (Ec.04 or Ec.14) can be changed via analog parameter setting (see chapter 7.15.9).

Example:
The goal is to be able to set the gear factor for encoder channel 2 to between 0.9 and 1.1. Gear factor denominator is chosen as 1000. The gear factor numerator must also be settable to between 900 and 1100.

The analog setting shall be done through the Aux-input
=> An.53 Analog parameter setting source = 0: Aux input (ru.53)

The target of the setting is Ec.14 gear factor channel 2 numerator (bus address 100Eh)
=> An.54 Analog parameter setting destination = 100Eh

For an analog value of 0%, one should have gear factor numerator = 1000
=> An.55 Analog parameter setting offset = 1000

For an analog value of 100%, the gear factor numerator should be 1100
=> An.56 Analog parameter setting max. value = 1100

With this setting, a gear factor of 0.9 to 1.1 can be set with an Aux value of -100%...100%.

7.11.8.3 Gear factor / set-programming

The gear factor is generally not set-programmable.
There is a workaround in case the application needs a set-dependent gear factor.
One uses the option of analogously setting the gear factor for this purpose. As the source for the analog parameter setting, not an analog input but the motor potentiometer value is selected, which can be specified set-dependently.

Example:

In set 0, the gear factor should have the value 0.5, in set 1, the value 1, and in set 2, the value 1.5. Gear factor denominator is chosen as 1000. The gear factor numerator must therefore be: in set 0 = 500, in set 1 = 1000, and in set 2 = 1500.

The analog setting should be done by motor potentiometer
=> An.53 Analog parameter setting source = 1: Motor potentiometer (ru.37)

The target of the setting is Ec.14 gear factor channel 2 numerator (bus address 100E hex)
=> An.54 Analog parameter setting destination = 100Eh

The value range is symmetrical around 1000 (+/- 500)
=> An.55 Analog parameter setting offset = 1000

The maximum value for the gear factor numerator should be 1500
=> An.56 Analog parameter setting max. value = 1500

The set-dependent gear factors are now realised through the different values for oP.52 "motor potentiometer value". For that purpose, the following setting have to be made :

Set 0...2:	oP.53 Motor potentiometer min. value =	-100%
Set 0...2:	oP.54 Motor potentiometer max. value =	100%
Set 0:	oP.52 Motor potentiometer value =	-100%
Set 1:	oP.52 Motor potentiometer value =	0
Set 2:	oP.52 Motor potentiometer value =	100%

7.11.9 Operation mode output

The encoder emulation is parameterized with parameter Ec.27.
Condition: The inverter contains an encoder interface; one channel is an encoder emulation or one channel can be changed over to encoder emulation.
The encoder interfaces of the respective inverter can be read out in parameter Ec.00 „encoder 1 interface“ or Ec.10 „encoder 2 interface".

Ec.27: Operation mode output			
Bit	Function	Value	Description
0...1	Source	0: Channel 1	The increments of the encoder at channel 1 (programmable and readable via Ec.01) are output via encoder emulation at channel 2.
		1: Channel 2	This value is without function, because there is no encoder interface with encoder emulation available via channel 1
		2: Actual value	The displayed speed in ru.07 „actual value“ is output via the emulation.It does not matter, whether this speed is a measured or calculated value. The increments per revolution of the emulation must be selected with bit 2, 3 „actual value“. Attention: No zero signal is output!
		3: reserved	
2, 3	Actual value	0: 256 inc	Number of increments per revolution, which are output via the encoder emulation channel by setting „source = 2: actual value“.
		4: 512 inc	
		8: 1024 inc	
		12: 2048 inc	
4...5	Division	0: direct	The increments of encoder channel 1 are output via encoder emulation. Use this adjustment always if „source = 2: actual value“ is parameterized.
		16: 2	The increments of encoder channel 1 are divided by the selected factor (2, 4, 8,…). Attention: The zero signal is not divided. It is output once per revolution. Also the pulse duration of the zero signal is not changed compared to the direct output. Thus it is shorter than the divided trace A and B signals.
		32: 4	
		48: 8	
		64: 16	
		80: 32	
		96: 64	
		112: 128	

7.11.10 System offset (Ec.33 / Ec.34)

The system offset is used to:
- set the actual position to the reference point
- Compensate overflows at multiturn encoders after power-on

7.11.11 Further parameters / encoder

The following parameters are needed only for specific encoder interfaces and are explained more closely in the appropriate documentation.

7.11.11.1 SSI encoder at channel 1

Ec.53: Encoder 1 SSI multiturn res.	
Default value	0
Value range	0…13
Number of bits for all revolutions	

Ec.43: SSI data code channel 1		
Default value	0	
Value range	0…1	
0	binary	used data format of the encoder
1	Gray	

Ec.54: Encoder 1 SSI mode		
Default value	0	
Value range	0…2	
0	Standard	
1	Singleturn 25 bit	SSI singleturn encoder which shall be read out with 25bit
2	Linear (SIKO AE 111)	Especially for SIKO encoders at linear motors

7.11.11.2 SSI encoder at channel 2

Ec.21: SSI multiturn res.		
Default value	12	
Value range	0…13	Number of bits for all revolutions

Ec.22: SSI Clock frequency		
Default value	0	
Value range	0...1	
0	156 kHz	should not be changed by the default value 156khz
1	312 kHz	

Ec.23: SSI data code		
Default value	1	
Value range	0…1	
0	binary	
1	Gray	Valid for binary and gray

Ec.24: SSI power failure bit		
Default value	0	
Value range	0…1	
0	off	
1	an	bit 25 is requested in the SSI protocol 0:ok ;1:error

Ec.55: Encoder 2 SSI mode		
Default value	0	
Value range	0…2	
0	Standard	
1	Singleturn 25 bit	SSI singleturn encoder which shall be read out with 25bit
2	Linear (SIKO AE 111)	Especially for SIKO encoders at linear motors

7.11.11.3 SSI position standardization channel 1 and 2 (Ec.41)

Ec.41: Mode display multiturn		
Default value	0	
Value range	0…15	
bit 0: mode channel 1		
0	full 32 bit range	Value range of the positioning: 2^{31}-1... 2^{31}-1
1	only multiturn range	Value range of 0…$2^{ec.52}$
bit 1: mode channel 2		
0	full 32 bit range	Value range of the positioning: 2^{31}-1... 2^{31}-1
2	only multiturn range	Value range of 0…$2^{ec.52}$
bit 2: Overflow detection channel 1		
0	on	The last position value is compared with the current value after power on and if necessary overflows in parameter ec.33 are considered. The prerequisite is that the position has not changed by half the value range at power-off. Problems with encoders whose initialisation takes longer than for the inverter. The function must be activated here.
4	Off	Overflow detection not active e.g. linear - axes
bit 3: Overflow detection channel 2		
0	on	s.h. bit2 overflow in ec.34
8	Off	Overflow detection not active e.g. linear - axes

7.11.11.4 Tachometer at channel 2

Ec.25: nominal tachometer speed	
Default value	1500 rpm
Value range	0…16000 rpm
Nominal speed of tacho voltage	

7.11.11.5 Evaluation intelligent interface

„Intelligent interface“ is a general term for all encoder interface types, which contain their own micro controller for the encoder evaluation.
Parameters Ec.36 .. Ec.38 are only supported at these interface types.

Some encoder contain a so-called „electronic type plate“ if an intelligent interface is necessary for evaluation. That means: the most important motor and encoder data can be stored in the encoder.These data can be read out and stored by the inverter at start-up (see point „Ec.38 encoder 1 r/w)

Ec.36 encoder 1 type

The encoder is specified in this parameter:

Ec.36: encoder 1 type						
No	Encoder type	Interface			electr. type plate	Ec.00 encoder interface 1
		Hiperface	ENDAT	SSI		
2	SCS 60/70	x			yes	11: Hiperface
7	SCM 60/70	x			yes	11: Hiperface
16	SinCos not absolute				no	14: Sin Cos
17	SinCos absolute				no	14: Sin Cos
18	SSI absolute			x	no	20: SSI – Sin Cos
19	UVW without zero track				no	22: UVW
20	UVW with zero track				no	22: UVW
34	SRS 50/60	x			yes	11: Hiperface
39	SRM 50/60	x			yes	11: Hiperface
49	Endat Singleturn		x		yes	16: ENDAT
50	Endat Multiturn		x		yes	16: ENDAT
50	SKS 36	x			yes	11: Hiperface
51	Endat linear		x		yes	16: ENDAT
55	SKM 36	x			yes	11: Hiperface

Ec.37 enc. 1 encoder status

Parameter Ec.37 "encoder 1 status" indicates the actual status of the encoder and encoder interface 1.
The encoder error is only displayed in the inverter status ru.00, if the control release is set.
The encoder status is always displayed in Ec.37.
If the error message: „35: Error! encoder change“ (E.EncC) is displayed in inverter status ru.00, the exact error message can be read in Ec.37.

ec.37: Encoder 1 encoder status		
Value	Explanation	Error
0: no communication to the interface	no communication between interface and control board	E.Hyb
16: transmit position	Position values are transmitted, encoder and interface are correct	no
64: encoder not defined	Encoder is unknown and is not supported	E.EncC
68: no communication to the encoder	The signals of the absolute track are incorrect. The absolute track at Endat, Hiperface and SSI-SinCos is digital, at SinCos it is analog.	E.EncC
69: increase error counter	Position deviation too large. The position, determined from the incremental signals and the absolute position (absolute track, zero signal or serial read out) do not agree or they cannot be corrected.	E.EncC
70: Ec.01 unequal to the encoder type	Adjusted increments per revolution of the inverter does not agree with the encoder increments per revolution.	E.EncC
71: interface identification	Interface type is unknown: Interface was not identified.	E.EncC
Ec.37 enc. 1 encoder status		
Value	Explanation	Error
75: encoder temperature	Encoder temperature too high (message from encoder)	E.EncC
76: speed too high	Speed is too high (message from encoder)	E.EncC
77: int. encoder signals too low	Encoder signals are out of the specification (message from encoder)	E.EncC
78: int. encoder defect	Encoder has an internal error (message from encoder)	E.EncC
92: format encoder	Encoder is formatted. When writing on an encoder, whose storage structure does not correspond to the KEB definition, the storage areas are reorganised, so they can be written on. This procedure can take several seconds, depending on the available memory structure.	E.EncC
96: new encoder identifier	New value recognized, because another encoder was connected	E.EncC
98: damaged interface	Interface is busy	E.EncC
97: invalid data	KEB-identification is undefined. Memory structure in the encoder is not corresponding to the KEB definition and consequently the data can not be read.	E.Enc1
255: no communication to the interface	no communication between interface and control board	E.Hyb

• Error encoder change

If the correct evaluation of the position is no longer guaranteed, error „35: ERROR! encoder change“ (E.EncC) is triggered.
The error can only be reset with parameter Ec.00.

An error due to wrong encoder increments per revolution (value 70) is immediately reset, if the correct number of increments per revolution is adjusted.

Attention: if the control release is still set, the drive starts to run automatically.

• Error encoder 1

If no data can be read out from the encoder (value 97), „32: ERROR! encoder 1“ (E.Enc1) is triggered.The error can be reset at F5-S by writing of a system position in Ec.02 or by system position alignment

• Error enocder interface

Error „52: ERROR! encoder interface“ (E.HYb) only occurs, if either the control board or the encoder interface is defective, or the voltage supply for the encoder interface is short-circuited by a defective encoder cable (e.g.).

Ec.38 encoder 1 r/w (electronic motor name plate)

Data can be stored and read out in some absolute encoders (e.g. Endat, Hiperface). Thus an „electronic name plate“ can be stored for the motor/encoder system.
If an inverter is connected the first time with an encoder which contains an electronic name plate, this is automatically read out, if „data load when switching on = 4: automatic “ is adjusted in Ec.38 (factory setting at F5-S).

KEB servo motors with electronic name plates already contain the complete motor data.

Ec.38 encoder 1 r/w			
Bit	Meaning	Value	Explanation
0	read data	0: reading not active	Activates the reading, value is set to 0 afterwards.
		1: reading activated	
1	store data	0: storing not active	Activates the storing, value is set to 0 afterwards (Supervisor-password protected)
		2: storing activated	
2	load data during switching on	0: not automatically	Activates the automatic data load of the inverter at the first start-up
		4: automatically	
3, 4	data group/ selection	0: system and application (all)	Motor data, Ec.01, Ec.02, cS.19 and Ec.03
		8: System	only motor data, Ec.01 and Ec.02
		16: only Ec.02	only Ec.02

The stored parameters in the encoder are divided in two groups: system and application parameter.
The data are different for synchronous motors (F5-S) and asynchronous motors (F5-M).
The following table gives an overview of the data:

	F5-S	F5-M
System	dr.23 DSM rated current	dr.00 DASM rated current
	dr.24 DSM rated speed	dr.01 DASM rated speed
	dr.25 DSM rated frequency	dr.02 DASM rated voltage
	dr.26 DSM EMK [Vpk*1000RPM]	dr.03 DASM rated power
	dr.27 DSM rated torque	dr.04 DASM rated cos(phi)
	dr.28 DSM curr. f. zero speed	dr.05 DASM rated frequency
	dr.30 DSM winding resistance	dr.06 DASM stator resistance
	dr.31 DSM winding inductance	dr.07 DASM sigma-inductance
	dr.32 DSM rated power	---
	dr.33 DSM max. torque	---
	Ec.01 encoder (inc/r) 1	Ec.01 encoder (inc/r) 1
	Ec.02 absolute pos. enc.1	---
Application	cS.19 abs. torque ref	
	Ec.03 time 1 for speed calc.	

Read data:

Each encoder is clearly identified by an internal serial number.
If an inverter is connected the first time with an encoder which contains an electronic name plate, this is automatically read out, if „data load when switching on = 4: automatic “ is adjusted in Ec.38 (factory setting at F5-S).
No error is released if the reading is successful.
The data are not read out again as long as the encoder serial number does not change.

If another encoder (other serial number) is connected to the same inverter, error message „35: ERROR! encoder change“ (E.EncC) is released first. Ec.37 „encoder 1 status“ displays the value „96: new encoder identifier“.
If this error is reset, the inverter reads automatically the data of the new encoder (according to parameterizing) and stores them.

If the encoder does not contain electronic rating plate data, „32: ERROR! encoder 1“ (E.Enc1) is released.

If the data shall be read later again from the encoder, this must be triggered manually by setting of bit 0 „reading activated “in Ec.38.
Which data of the encoder shall be read can be selected with bit 3 and 4 „data group/ selection“.

In case of successful reading, bit „reading activated“ is automatically reset.

If the stored data cannot be read or loaded into the inverter, error message „32: ERROR! encoder 1“ (E.Enc1) is released and parameter Ec.37 displays value 97: "invalid data".

Attention: The controller adaption is automatically triggered after read out of the data (corresponds to the setting of Fr.10 = 2) and Pn.61 „absolute torque limit“ = cS.19 „absolute torque reference“ is set.

Data storage:

The data must be entered to the inverter if an encoder does not contain an electronic type plate. Next the data can be stored in the encoder.
For this the supervisor password must be entered and Ec.38 = „2: memory activated“ must be written.
If an error occurs during storage, Ec.37 displays the status „68:no communication to the encoder“. In case of successful storage, bit „storage activated“ is automatically reset.
The system and application data are always stored!

7.11.11.6 Encoder over gear (ec.39)

This parameter allows the operation of encoders that either are not mounted directly to the motor (output, belt), whose detection has a superior position evaluation (e.g., pole-pair resolver), or whose increments per revolution cannot be set in ec.01.

ec.39: encoder over transmission		
Value	Function	Description
0	off	No function
1	Motor – Encoder	Speed ratio in the encoder detection. Position values are evaluated 1:1, gear factor ec.04/05 enters the speed measurement.
2	Ec.01 x Ec.05 (1 zero impulse / revolution)	The increments per revolution of the encoder is greater than the parameter in ec.01 allows. The zero signal is once per revolution
3	Ec.01 x Ec.05 (spacer-coded)	like 2, but the zero signal is spacer-coded (500inc / 500 inc = zero position)
4	Reserved	Special software (like 2, but the zero signal is validated via an external reference switch).
5	Motor – Encoder + synchronous channel 2	For channel 1 as 1. The motor is operated under control of an encoder coupled to the output. Via channel 2, control occurs position-synchronous. The gear factor in channel 1 is considered in the speed detection of channel 2, which serves for precontrol.

1. Introduction	7.1 Operating and appliance data
2. Summary	7.2 Analog in- and outputs I
3. Hardware	7.3 Digital in- and outputs
4. Operation	7.4 Setpoint-, rotation- and ramp adjustment
5. Selection of Operating Mode	7.5 Motor data and controller adjustments of the asynchronous motor
6. Initial Start-up	7.6 Motor data and controller adjustments of the synchronous motor
7. Functions	7.7 Speed control
8. Error Assistance	7.8 Torque display and -limiting
9. Project Design	7.9 Torque control
10. Networks	7.10 Current control, -limiting and switching frequencies
11. Parameter Overview	7.11 Speed measurement
12. Annex	**7.12 Positioning and synchronous control**
	7.13 Protective functions
	7.14 Parameter sets
	7.15 Special functions
	7.16 CP-Parameter definition

7.12.1 Limit switch ..... 7.12 - 4
7.12.1.1 Hardware limit switch ..... 7.12 - 4
7.12.1.2 Software limit switch ..... 7.12 - 4

7.12.2 Approach the reference point ..... 7.12 - 4
7.12.2.1 Approach to reference point / modes ..... 7.12 - 6
7.12.2.2 Approach to reference point / stopping point ..... 7.12 - 8
7.12.2.3 Approach to reference point / stop at zero signal ..... 7.12 - 8
7.12.2.4 Approach to reference point / no driving free ..... 7.12 - 9
7.12.2.5 Approach to reference point / limit switch ..... 7.12 - 9
7.12.2.6 Reference point / manual setting ..... 7.12 - 11
7.12.2.6.1 Over PS 14 ..... 7.12 - 11
7.12.2.6.2 With input function "set reference point" ..... 7.12 - 11
7.12.2.7 Reference point / valid position ..... 7.12 - 11
7.12.2.8 Approach to reference point / stop at index 0 ..... 7.12 - 12
7.12.2.9 Approach to reference point with subsequent drive to zero signal ..... 7.12 - 13

7.12.3 Synchronous mode ..... 7.12 - 14
7.12.3.1 Synchronous mode / principle ..... 7.12 - 14
7.12.3.2 Synchronous mode / premise ..... 7.12 - 15
7.12.3.4 Synchronous mode / position normalisation ..... 7.12 - 17
7.12.3.5 Synchronous mode / selection of operating mode ..... 7.12 - 18
7.12.3.6 Synchronous mode / activation and synchronization ..... 7.12 - 19
7.12.3.6.1 Principle ..... 7.12 - 19
7.12.3.6.2 Synchronization at limit ..... 7.12 - 19
7.12.3.6.3 Synchronization with constant path ..... 7.12 - 20
7.12.3.6.4 Synchronization with ramp ..... 7.12 - 22
7.12.3.7 Gear factor ..... 7.12 - 24
7.12.3.8 Angular correction ..... 7.12 - 25
7.12.3.9 Angular reset ..... 7.12 - 26

7.12.4 Posi mode ..... 7.12 - 27
7.12.4.1 Selection of operating mode ..... 7.12 - 27
7.12.4.2 Posi mode / principle ..... 7.12 - 27
7.12.4.3 Posi mode / premise ..... 7.12 - 29
7.12.4.4 Position normalisation ..... 7.12 - 30
7.12.4.4.1 Position control by the motor encoder ..... 7.12 - 30
7.12.4.4.2 Positioning by the output ..... 7.12 - 31
7.12.4.4.3 Speed and position control by motor encoder/ encoder mounting via gear ..... 7.12 - 32
7.12.4.5 Posi mode / actual position ..... 7.12 - 34
7.12.4.6 Posi mode / set and target position ..... 7.12 - 34
7.12.4.7 Posi mode / single positioning ..... 7.12 - 35
7.12.4.8 Posi mode / sequential positioning ..... 7.12 - 37
7.12.4.9 Posi mode / Positioning with set changeover ..... 7.12 - 50
7.12.4.10 Posi mode / rotary table ..... 7.12 - 50
7.12.4.10.1 Rotary table with path optimization ..... 7.12 - 52
7.12.4.10.2 Rotary table without path optimization ..... 7.12 - 53
7.12.4.11 Posi mode / defined stop ..... 7.12 - 56
7.12.4.12 Posi mode / remaining distance positioning ..... 7.12 - 58
7.12.4.13 Posi mode / flying referencing with correction ..... 7.12 - 59
7.12.4.14 Posi mode / start positioning ..... 7.12 - 64
7.12.4.15 Posi mode / not reachable positions ..... 7.12 - 68
7.12.4.16 Posi mode / stop positioning ..... 7.12 - 70
7.12.4.17 Analog position setting ..... 7.12 - 71

7.12.4.18 Analog position output ..... 7.12 - 71
7.12.4.19 Target window ..... 7.12 - 72
7.12.4.20 Position scan ..... 7.12 - 72
7.12.4.21 Teach function ..... 7.12 - 73
7.12.4.22 Functions and displays for the positioning mode ..... 7.12 - 74

7.12.5 Contouring control mode ..... 7.12 - 77
7.12.5.1 Contouring control mode / premises ..... 7.12 - 77
7.12.5.2 Contouring control mode / settings ..... 7.12 - 78
7.12.5.3 Contouring control mode / write / read data ..... 7.12 - 78
7.12.5.4 Contouring control mode / speed precontrol ..... 7.12 - 79
7.12.5.5 Contouring control mode / watchdog ..... 7.12 - 79
7.12.5.6 Contouring control mode / example ..... 7.12 - 79

7.12.6 Position controller ..... 7.12 - 82

7.12 Positioning and synchronous control

7.12.1 Limit switch

7.12.1.1 Hardware limit switch

The inputs occupied with the functions„32: forward“ (limit switch right) and „64: backward“ (limit switch left) in di.11...22 serve as hardware limit switches. Therefore, the rotation setting via terminals (oP.01 "source of rotation direction" = 2...6) may not be used if the limit switch function is to be used.
To protect against cable breakage, an unconnected input means that the drive has run onto the limit switch.

Attention: Only the limit switch for the current direction of rotation is ever evaluated, i.e., for clockwise rotation, only the right limit switch is considered and the left limit switch is ignored. The analog applies to counter clockwise rotation. Therefore, the limit switch can act only if the drive runs in the correct sense of rotation and the connections of the limit switches are not interchanged. Furthermore, one must ensure that the drive stops at the limit switch. If the limit switch is overrun, a new positioning in the disabled direction can be carried out.

The response to the error (the run-on to the limit switch) is set in parameter Pn.07 "limit switch error response". Possible responses are, e.g., triggering of an error or emergency stop (see chapter 7.15 "protection functions").

Note: If a function with "AutoRestart" (automatic restart) is selected as response, the status "Warning! disabled direction of rotation“ is displayed only during breaking (display by ru.00 "inverter state" or by digital output). Afterwards, the status changes to "ready for positioning" again.
If a function without AutoRestart is chosen, the error-/ warning- message remains displayed until reset. Afterwards, the status changes to "ready for positioning" again, even if the drive still points in the direction of the limit switch. The error-/ warning- message is set again only at the next "start positioning" command.

7.12.1.2 Software limit switch

The software limit switches complement the function of the hardware limit switch.
They are active only after an approach to reference point or the setting of reference points, respectively (see chapter 7.12.2 approach to reference point). In contrast to hardware limit switches, the software limit switches can lose their protective function by, e.g., a faulty approach to reference point or a faulty position correction. Their advantage is that they cannot be overrun.
For a positioning whose target lies outside of the permissible range, the "start positioning"-commands are ignored. The permissible range lies between PS.15 "software limit switch left" and PS.16 "software limit switch right". The software limit switches are active in the vector controlled operation, the synchronous mode, the positioning mode, and the contouring mode.
The response to the error (running onto the limit switch) is specified in Pn.66 "response software limit switch". Possible responses are, e.g., triggering of an error or emergency stop (see chapter 7.13 "protection functions").
Note: If a function with "AutoRestart" (automatic restart) is selected as response, neither "disabled direction of rotation" is displayed in status "warning! nor switching condition "quick stop/ error" is set. Cause: As soon as the setpoint speed is equal to zero, the drive does not run in a disabled direction of rotation anymore, and the malfunction is reset automatically. The drive also displays "ready for positioning", but does not react to "start positioning" commands anymore as long as the target position lies outside the permissible range.
If a function without AutoRestart is chosen, the error-/ warning- message remains displayed until reset. Afterwards, the status changes to "ready for positioning" again.

7.12.2 Approach the reference point

For an approach to reference point, the following conditions must be met:

- program and connect an input as reference point switch(PS.18). The same input can also be used as a limit switch. Since the limit switches are "zero active" for protection against cable breakage, the reference switch, in this case, is also "zero active". If the reference switch is connected to its own input, it is "one active".
- Define an input for the start of the approach to reference point (with PS.19/ only necessary in approach to reference point mode 1).
- connect the limit switches to the inputs programmed with the functions „32: forward“ and „64: backward“ in di.11...12 (forward = right limit switch / backward = left limit switch). If the limit switches shall be omitted (e.g. at rotary table applications), no input may be assigned with the function "forward" or "backward".
- The approach to reference point must be activated in item "approach to reference point mode" of parameter PS.14.

7.12.2.1 Approach to reference point / modes

There are 3 different modes of position reference:

PS.14 Mode of position reference			
Bit	Meaning	Value	Explanation
0/1	Mode of position reference	0: off	No approach to reference point
		1: no autostart	Approach to reference point is started via digital input. The input is defined with PS.19.
		2: autostart	The approach to reference point is carried out automatically during the first "start positioning" command after "power on", even if the positioning mode has not been activated yet (input with function "Positioning /synchronous activation" not set). If the approach to reference point is interrupted (e.g., by switching off the control release), all other "start positioning" commands also start an approach to reference point. Has the reference point search been completed once, no approach to reference point can be initiated with "start positioning" anymore. If, additionally, an input is occupied with the function "approach to reference point", this input is also active.
		3: last position (at power-on-reset)	The software limit switches are immediately active (if programmed in Pn.66). The switching condition „approach to reference point completed“ is met.The value for the actual position (ru.54) is generated as follows: ● **Encoder without absolute position information (e.g., incremental encoder)**: After "power on" the actual position is = the last acquired actual position before "power off". To ensure that the position is correct, the encoder may not turn anymore after power off. ● **Encoder with single-turn absolute position information (e.g., resolver)**: After "power on", the position is read out by the encoder within one revolution, the count of whole revolutions is taken from the last actual position before "power off". To ensure that the position is correct, the encoder may turn maximally ½ revolution after power off. ● **Encoder With multi turn absolute position information**: The current actual position is read from the encoder after "power on".

In mode 1 and 2, the approach to reference point is started on the rising edge of input "start approach to reference point" (mode 1) and "start positioning" (mode 2), respectively.

The approach to reference point starts at the speed set in PS.21 "approach to reference point speed". The direction of rotation which is used first for the reference point search (the preferred direction f rotation) is set by the sign of PS.21 . A positive sign means the drive first looks for the reference point switch in the clockwise direction of rotation.
The acceleration / deceleration ramps during the approach to reference point are defined via PS.20 "approach to reference point ramp time" rather than the OP-parameters.

Attention: the ramp time and the approach to reference point speed must be chosen so that the drive can stop and reverse as long as the reference point switch is active. Otherwise, faulty referencing can occur (e.g., stop on the wrong side of the reference point).
To achieve the most precise referencing, an "approach to reference point free drive-speed" can be programmed for free driving of the reference switch in PS.22.If this parameter is set to "0:off", the free drive-speed is taken as ¼ of the approach to reference point speed (PS.21) .
At the reference point, the actual position is overwritten with the value of PS.17 "reference point".

The two following figures show an exemplary approach to reference point process. The further possibililties programmable in PS.14 are shown later in this chapter.

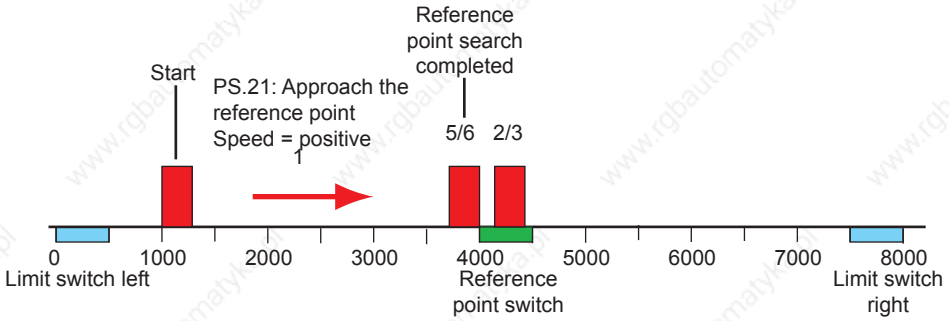

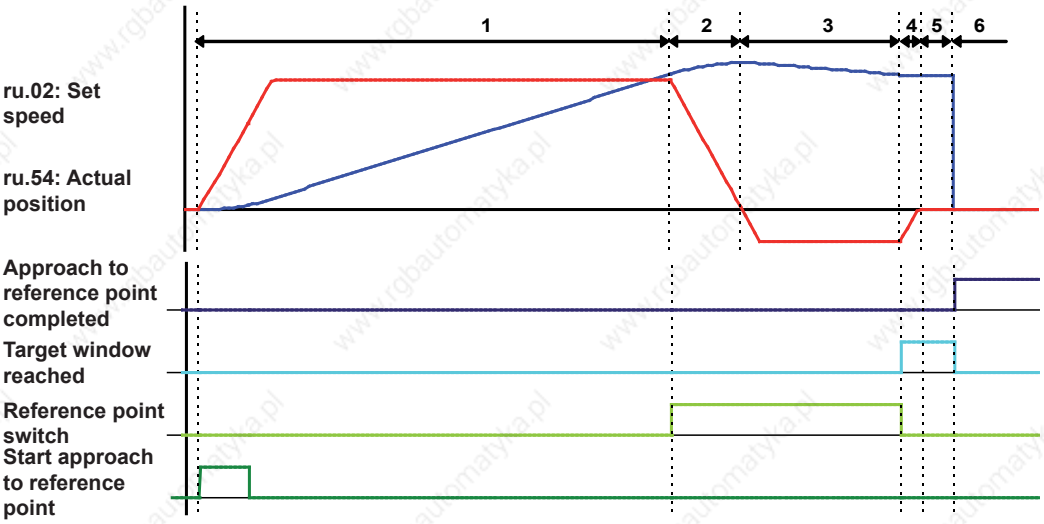

1. PS.21 = positive, i.e., the drive accelerates with the ramp from PS.20 and searches in the direction of clockwise rotation for the reference switch
2. Stopping at the reference switch
3. Free driving of the reference switch with free drive-speed (PS.21 / PS.22)
4. Stopping of the drive with ramp from PS.20
   Setting of the signal "target window reached"
5. Wait for the damping period of 100ms
6. Overwrite the current actual position (ru.54) with the reference point position(PS.17)
   Resetting of the signal "target window reached"
   Setting of the signal "approach to reference point completed"
   Stopping of the drive left of the reference point (programmable via PS.14)

7.12.2.2 Approach to reference point / stopping point

PS.14 determines which side of the reference point switch the drive is positioned on after the approach to reference point. Even if, after the free driving of the reference switch, positioning is to occur based on the zero signal, "stopping point " determines if the first null signal is to be driven on at the right or left of the reference switch.
The adjustment is only considered if the reference point switch serves not simultaneously as limit switch.

PS.14 Mode of position reference			
Bit	Meaning	Value	Explanation
3	Stopping point	0: right	Stop on the right side of the reference point switch
		8: left	Stop on the left side of the reference point switch

7.12.2.3 Approach to reference point / stop at zero signal

An approach to reference point that depends only on the initiator signal of the reference point switch is insufficiently precise for many applications. Therefore, the possibility exists to couple the reference point with the marker pulse of the encoder.
To that end, positioning after the free driving of the reference switch is done on the marker pulse of the encoder and the current actual position=marker pulse is then overwritten with the reference point value.
With "stop at null signal= 4: yes" this function is activated.
Additionally, two monitoring functions can be switched in with bit 4 "error if no zero signal" and bit 8 "Verify zero signal". These are only active if "stop at null signal= yes" is programmed.

PS.14 Mode of position reference			
Bit	Meaning	Value	Explanation
2	Stop at zero signal	0: no	The drive stops directly after free driving of the reference point switch.
		4: yes	The drive positions on the null signal of the encoder after free driving of the reference point switch at the free drive-speed. If during the drive to the reference switch no null signal was received, the behaviour of the drive is determined by bit 4 "error if no zero signal".
4	Error, if no zero signal	0: off	If, during the reference point search, no null signal is recognised, the drive rotates maximally another two revolutions at the free drive-speed to locate the null signal. If the null signal is found, the drive reverses and drives back to the reference point switch. Positioning on the null signal is executed after that. If no null signal is recognised during the null signal search, the inverter reports "error! Encoder 1" respectively "error! Encoder 2" (E.EnC1 respectively E.EnC2)
		16: on	If no zero signal is recognized during searching for the reference point switch (i.e. if the reference switch is reached before the encoder sends the first marker pulse), the inverter immediately indicates „Error! encoder 1" or "Error! encoder 2“ (E.EnC1 or E.EnC2).
8	Examine the zero signal	0: off	no examination of the position of the null signal
		256: on	The distance from switch to null signal is examined after driving free of the reference point switch. If the zero signal does not lie within a range of ¼ to ¾ revolution, „Error! encoder 1" or "Error! encoder 2“ (E.EnC) is released.

7.12.2.4 Approach to reference point / no driving free

Apart from the two modes "stop at null signal" or "stop after driving free" of the reference switch, there is a third reference point drive mode:

PS.14 Mode of position reference			
Bit	Meaning	Value	Explanation
9	No driving free	0: off	The reference point switch is driven free during the approach to reference point
		512: on	As soon as the reference point switch has been hit, the drive stops on the switch. It does not matter whether the switch has been hit going in the preferred direction. This setting may not be combined with "stop at null signal".

7.12.2.5 Approach to reference point / limit switch

If the drive reaches the hardware limit switch for the direction of rotation, it reverses automatically and searches in the
other direction of rotation for the reference point.
If no reference point switch is found, the drive continuously shuttles between the two hardware limit switches.

Note: During the approach to reference point, the limit switch function works differently than in usual operation. If in Pn.07 „proh. rot. stopping mode“ value „6: function switched off “ is programmed, the drive reverses with the defined acceleration and deceleration times in parameter PS.20 „reference acc./dec.time".
For all other value of Pn.07, the setpoint speed without ramp is set to zero. The drive stops and then accelerates in the other direction of rotation with the ramp from PS.20. No normal quick stop is executed, the quick stop parameters (Pn.60 / Pn.61 / Pn.67) have no function.

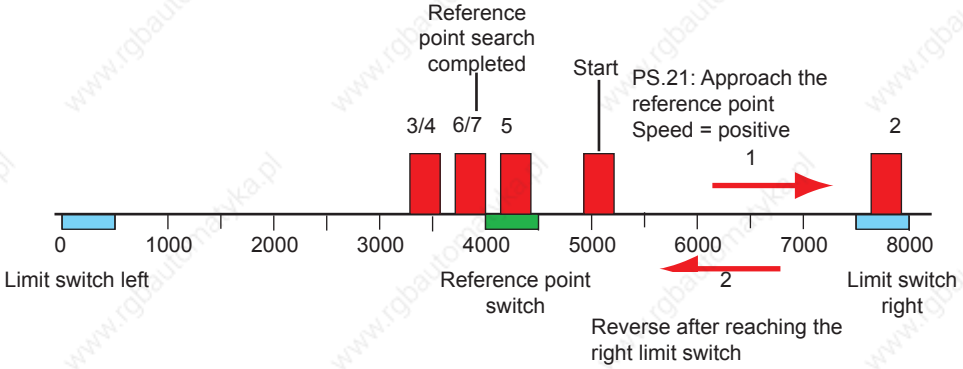

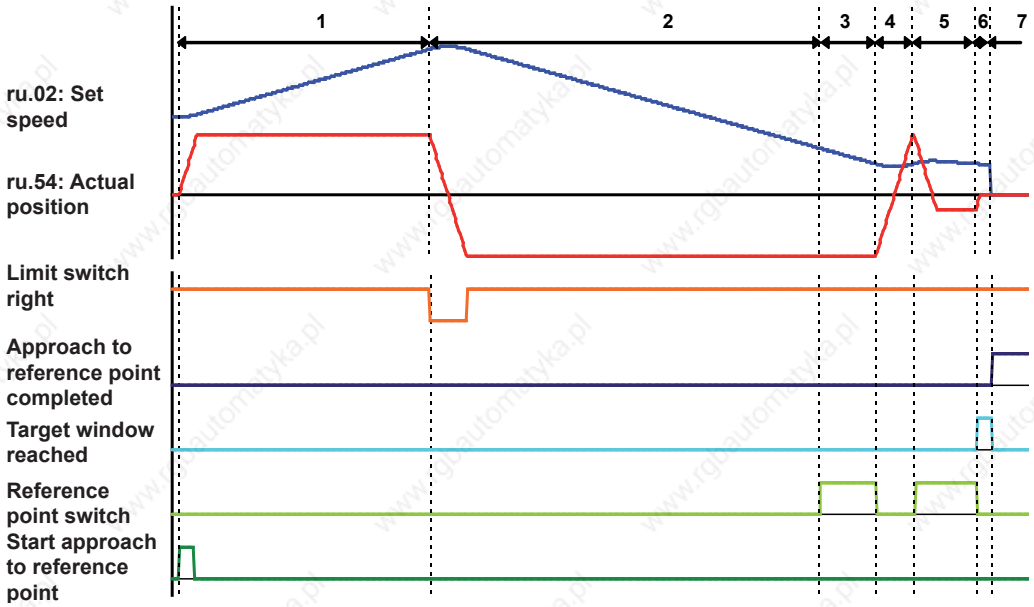

1. PS.21 positive
   Drive accelerates with ramp from PS.20 and seeks in clockwise direction of rotation for the reference switch
2. Run-on to the limit switch
   Reverse and seek in the other direction of rotation
3. Overdriving of the reference switch
   (because stopping the drive left of the reference switch is chosen in PS.14, the switch must be hit from the right)
4. Reversing and running onto the reference switch in direction of rotation clockwise
5. Reversing on the reference switch and driving free at free drive-speed (PS.21/ PS.22)
6. Stopping of the drive with the ramp from PS.20
   Setting of the signal "target window reached"
   Wait for the damping period of 100ms
7. Overwrite the current actual position (ru.54) with the reference point position(PS.17)
   Resetting of the signal "target window reached"
   Setting of the signal "approach to reference point completed"
   Stopping of the drive left of the reference point (programmable via PS.14)

7.12.2.6 Reference point / manual setting

7.12.2.6.1 Over PS.14

If no reference point switch is provided in the application, the drive can also be manually referenced:

PS.14 Mode of position reference			
Bit	Meaning	Value	Explanation
6	Manual setting	0: off	No manual setting
		64: on	The drive is approached in inching mode to reference point and then "manual setting = on" (bit 6) is set. The reference point position (PS.17) is taken as the actual position (ru.54). The switching condition "approach to reference point completed" (do.00...07, value 29) is set, the software limit switch function can be used.

7.12.2.6.2 With input function "set reference point"

Independent of PS.14 "Mode of position reference" or PS.00 "position / synchronous mode", the actual position ru.54 can be overwritten with the value of PS.17 "reference point" by setting a digital input.

To that end, an input must be selected in PS.13 "set reference point input selection".
(assignment of a digital input see chapter 7.3)

If this input set during an active positioning:

- the inverter remembers the remaining path
- the current position ru.54 is set to the reference point position PS.17
- the inverter continues the interrupted positioning

7.12.2.7 Reference point / valid position

In order for the software limit switch function to be useable, an approach to reference point must be executed prior to the positioning. In some cases (e.g., when using an absolute encoder), an approach to reference point is, however, not required. By activation of bit 7 "the captured position is valid = yes", the drive is informed that no approach to reference point is necessary.

PS.14 Mode of position reference			
Bit	Meaning	Value	Explanation
7	The captured position is valid	0: no	Approach to reference point must be executed.
		128: yes	The actual position (ru.54) is declared "always valid". The switching condition "approach to reference point completed" (do.00...07, value 29) is set, the software limit switch function can be used.

7.12.2.8 Approach to reference point / stop at index 0

By setting bit 5 (stop at index 0 = 32: on), it can be programmed that the drive after completion approach to reference point moves automatically (i.e. without „start positioning“ signal) to the position of index 0.
PS.20 "approach to reference point ramp time" specifies the acceleration / deceleration values for the positioning to index 0. The maximum profile speed for positioning is determined for Index 0 by the value of PS.25 "index speed".
The drive remains at that position. The setting "continue profile = yes” from index 0 is ignored.

PS.14 Mode of position reference			
Bit	Meaning	Value	Explanation
5	Stop at index 0	0: off	After approach to reference point the drive stops at the reference point.
		32: on	after approach to reference point, the position from Index 0 is driven to.

The following figure shows an approach to reference point with stop at the null signal left of the reference point switch and automatic positioning to index 0:

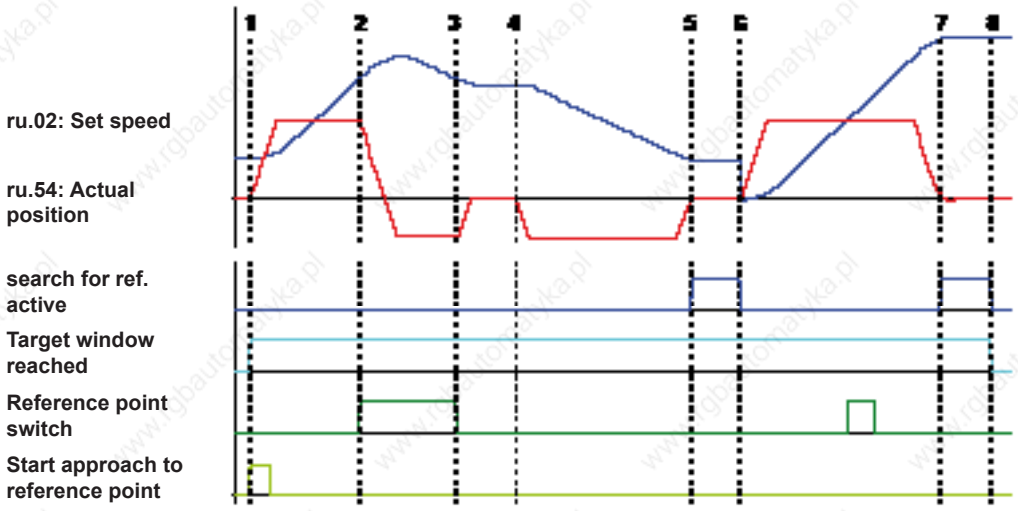

1: Start of approach to reference point
2.: Run-on at the reference point switch
2 - 3: Reversing and free driving of the reference switch
3 - 4: Stop left of the reference switch
4: Start of the positioning to the null signal of the encoder
5 - 6: Waiting out the damping period after reaching the null signal
6: Referencing of the actual position: ru.54 is overwritten with the value of PS.17 "reference point"
6 - 7: Positioning to the target position of index 0 with the ramp time from parameter PS.20
7: Reaching of the target position
8: Approach to reference point finished

7.12.2.9 Approach to reference point with subsequent drive to zero signal

In order that approach to reference point is more precise, positioning to the zero position of the encoder can be done after driving free of the reference switch. That this always happens to the same position, it is necessary to adjust the zero position of the encoder (zero signal) mechanically in such a way that it occurs a half motor revolution after reference switch. The distance from reference switch to zero position is displayed in ru.69.

Adjustment by software is significant more comfortable compared to the mechanical adjustment and occurs via parameter PS.60. Parameter PS.60 „zero puls offset“ specifies the position offset of the zero signal:

new zero signal position = zero signal position of encoder + PS.60

reasonable value range of PS.60: - increments per revolution / 2……. + increments per revolution /2

In the adjustment PS.14 Bit 12 „calculate offset “ at approach to reference point the offset in PS.60 is calculated in such a way that the drive rotates ½ revolution to the new zero signal position.

PS.60 = +/- encoder increments per revolution/2 + position value – zero signal position of the encoder

+ : drive in positive direction to the zero signal
- : drive in negative direction to the zero signal

PS.14 Bit12 must be deactivated after executed calculation. The position of the reference switch to the zero signal can be monitored with parameter PS.14 Bit 8 in a range 1/4… 2/3 revolution (ru.59).

7.12.3 Synchronous mode

7.12.3.1 Synchronous mode / principle

The synchronous module realises an angle / speed synchronous control of a master drive (control drive) to one or more slave drives. The control drive must not be closed-loop.
The master position is passed on to the slave. The master must therefore be equipped with an encoder interface with incremental encoder output, and every slave with a second incremental encoder input.
Alternatively, the master can also be operated uncontrolled and the encoder signals of the master drive can be connected directly to the slave.
The speed ratios are adjustable individually. The gear ratio is adjusted via the numerator / denominator ratio. If the directions of rotation have to be different, a negative gear ratio has to be set.
For activated position controller, the slave is driven angular-synchronous, for deactivated position controller (PS.06 = 0), speed-synchronous to the master drive.
The synchronous module contains other variants for synchronising (constant acceleration ramp or constant synchronisation path) and a programmable angle correction.

The following mapping shows the general behaviour of synchronous control (without synchronisation phases):

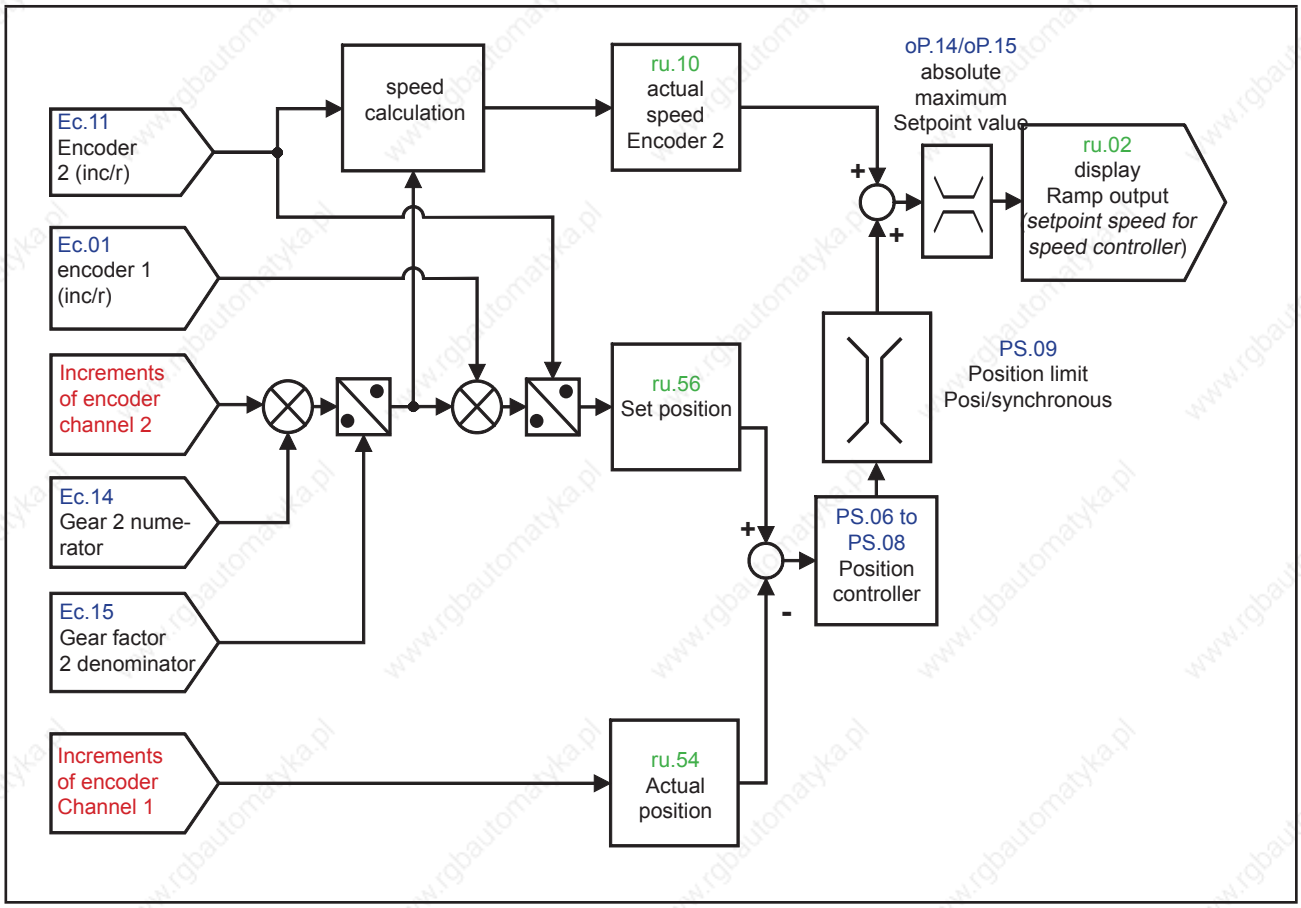

7.12.3.2 Synchronous mode / premise

For the synchronous module, the incremental signals from the encoder of the master drive must be passed on to the slave.

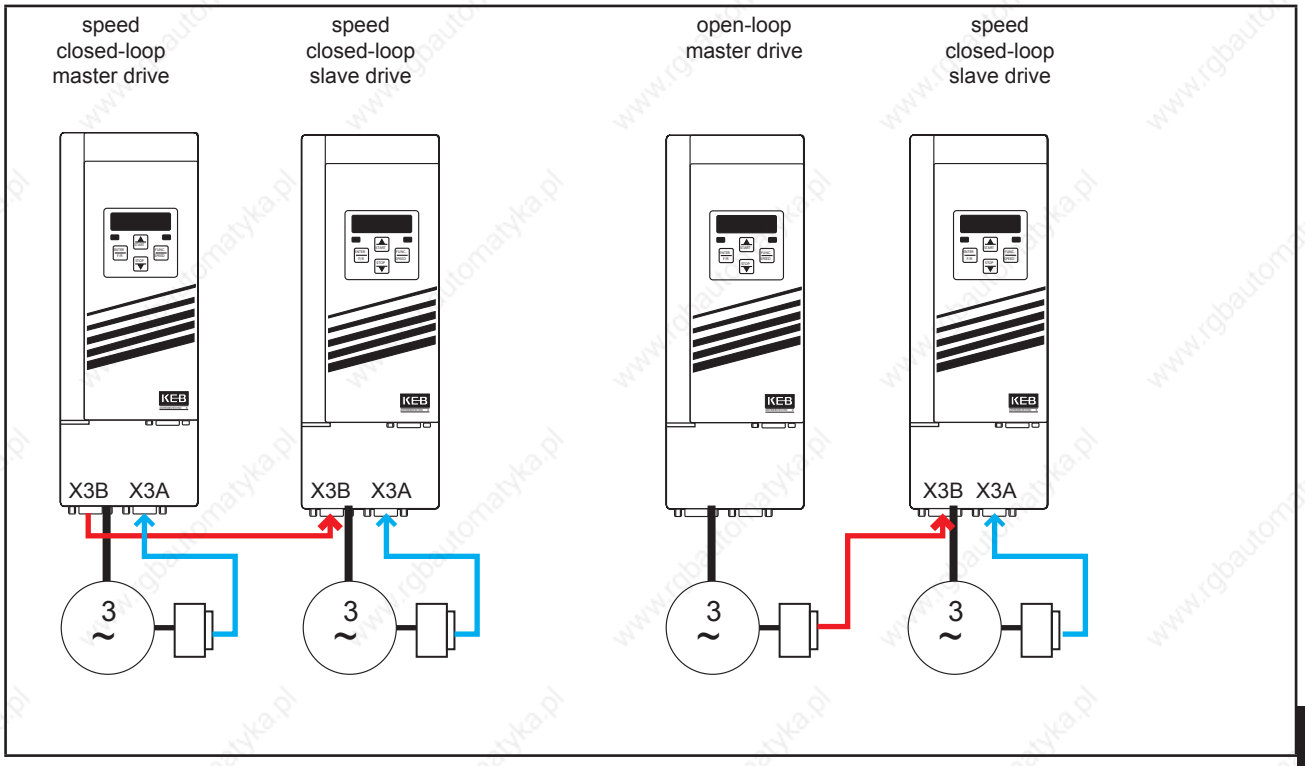

If more than one slave is connected, there are two different variations for assembling the master-slave-chain: direct transfer of the signals from the output of the master encoder interface to all slaves.

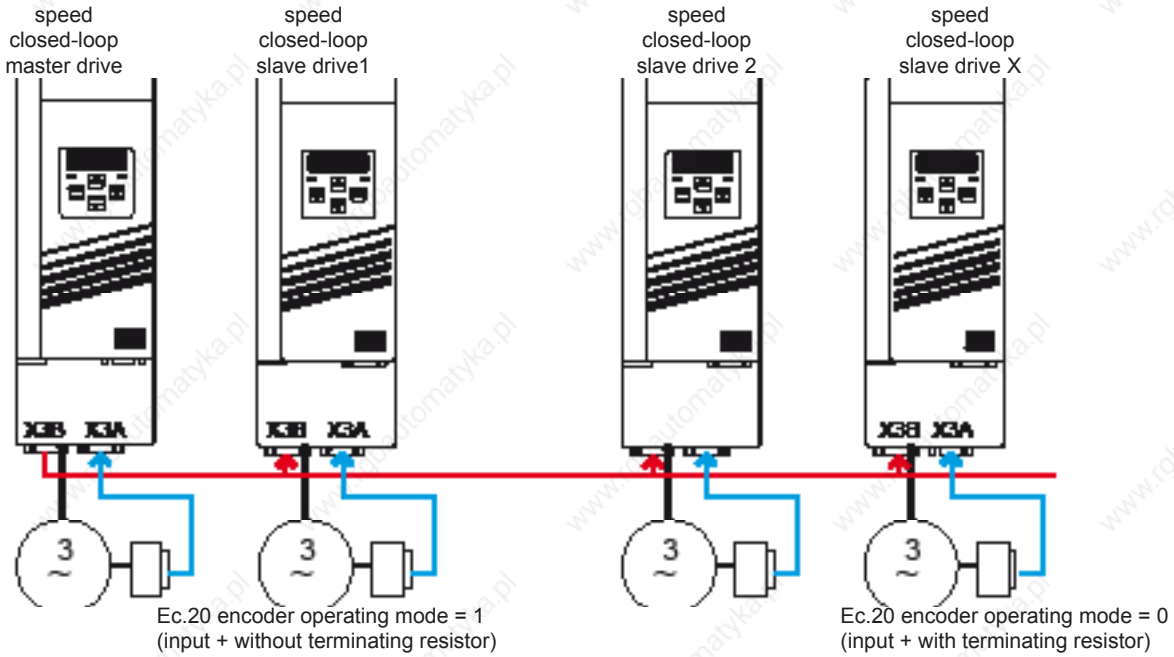

Ec.20 encoder operating mode = 1
(input + without terminating resistor)

Ec.20 encoder operating mode = 0
(input + with terminating resistor)

Disadvantages:

- Limitation of the number (max. 10, after RS.422 specification)
- No guarantee of an EMC conform installation (adapter required for distribution) therefore, the second variant is preferable:

Therefore the second variant is preferable:

- one MS-Repeater before each slave drive

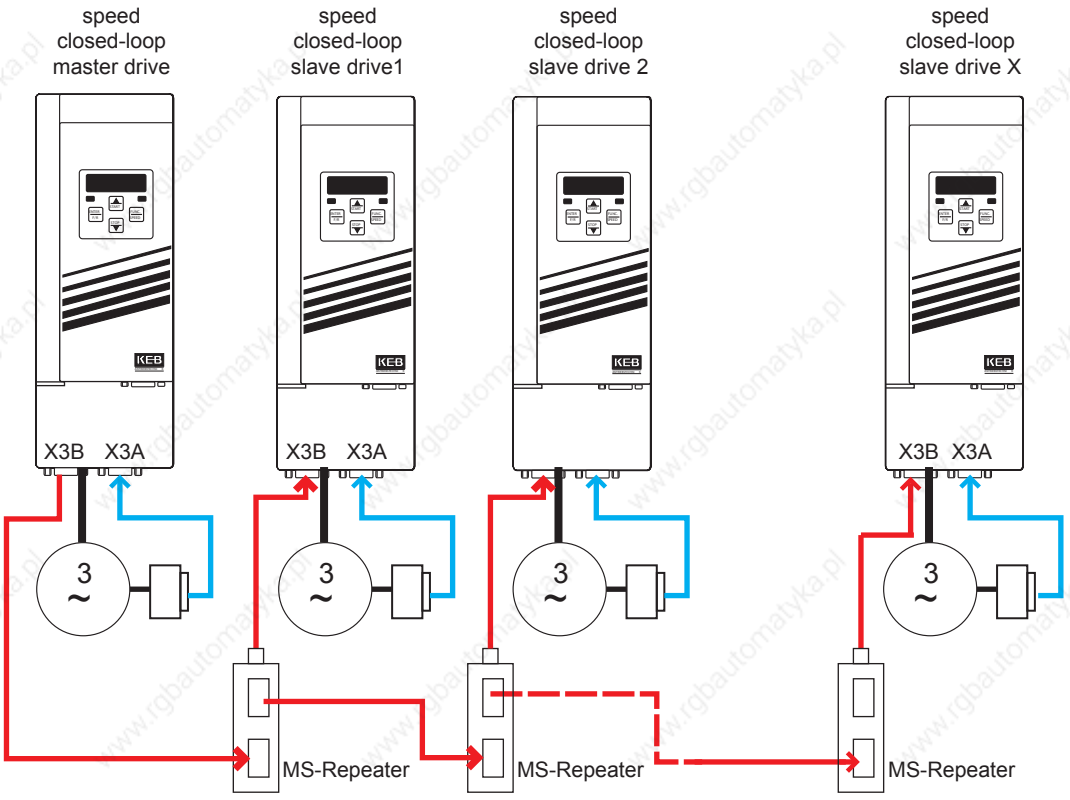

Ec.20 encoder operating mode = 0 (input + terminating resistor)
at all slave drives

Advantages:

- The incremental signals are processed. Thus, no limitation of the number of the connected slaves
- off-the-shelf cables available that guarantee EMC compliant assembly. Further information on available components can be found at wow.keb.de => Service & Downloads
- Error control for processed master signal integrated in repeater

7.12.3.4 Synchronous mode / position normalisation

Via parameter PS.01 master source, the channel from which the slave receives the master position is selected.
This must be encoder channel 2 for most applications. (Off-the-shelf cables and a terminating resistor that can be switched off exist only for channel 2).

Figure 7.12.3.4 Position normalisation

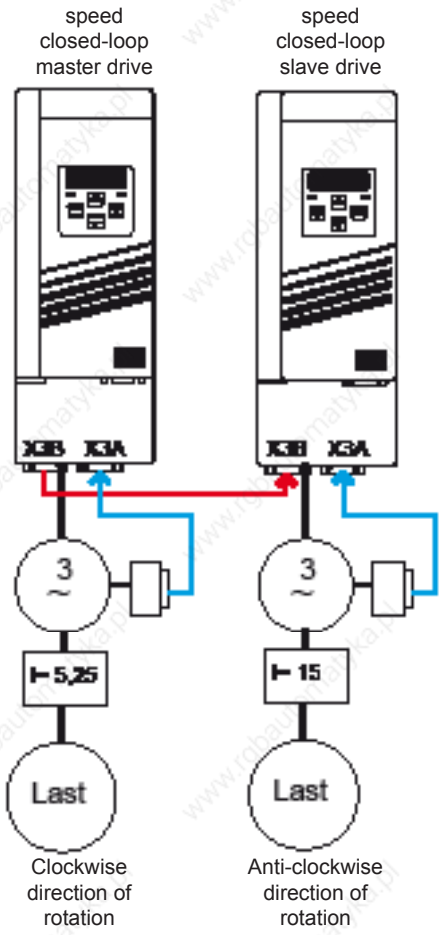

The adjoining figure shows a typical synchronous application.
If the load of the master drive has travelled one revolution, the load of the slave should also have travelled one revolution (in the opposite direction).

This is the case for e.g. printing machines or rolling machines.

The slave position (i.e. the number of increments from the slave motor) is displayed in parameter ru.54 "actual position". In ru.54, one revolution of the slave load corresponds to:

ec.01 "encoder 1 (inc/r)" x gear factor slave

The master position is displayed in parameter ru.56 "set point position". The display occurs in increments and is converted to the slave position. The conversion considers the ratio of the increments per revolution of the encoder and the ratio of the two gear factors. If the master is connected to encoder channel 2, the gear factor of the slave must be entered in parameter ec.14 "gear factor 2 numerator" and the gear factor of the master must be entered in parameter ec.15 "gear factor 2 denominator" for the conversion of the gear ratios.

Since only integer values can be preset, the gear factors must be extended correspondingly (15 : 5,25 becomes 1500 : 525). Display in ru.56 (master position converted to slave units):

$$\text{number increments master} \times \frac{\text{Ec.01}}{\text{Ec.11}} \times \frac{\text{EC.14 (gear factor slave)}}{\text{EC.15 (gear factor master)}}$$

An inversion of the rotation direction of the slave compared to the master drive is achieved by setting a negative value for Ec.14.

Example (adjustments for figure 7.12.3.3 position normalization):

"Normal" speed-controlled operation is programmed in the master, the synchronous module is not activated. For the slave, encoder channel 1 serves as speed feedback and encoder channel 2 as master position information. Both loads shall be moved angular-synchronous, but in opposite direction of rotation.

Adjustment in the slave:

- PS.00 "Posi / synchronous mode" = synchronous mode
- CS.01 "Actual source" = channel 1
- PS.01 "Actual master source" = channel 2
- PS.06 "KP for positioning / synchronous" ≠ 0
- EC.14 "Gear 2 numerator" = -1500
- EC.15 "Gear 2 denominator" = 525

Typically, an approach to reference point is executed for the slave drive before starting synchronous running, in order to get the reference between position display of the slave drive and the mechanics of the application.
The reference between master and slave position is done only with activation of the synchronous module.
The master position (= ru.56 "set point position") is set equal to the slave position (= ru.54 "actual position") during activation.

7.12.3.5 Synchronous mode / selection of operating mode

The operating mode synchronous mode is selected via parameters PS.00 bit 0...3 or via the control word (Sy.43 or Sy.50)

PS.00: Posi / synchronous mode			
Bit	Meaning	Value	Explanation
0..3	Posi-/Synchronous mode	0: off	no special operation selected
		1: Synchronous mode	Selection of operating mode "synchronous mode"
		2...6	Without function for synchronous mode
		7: via control word	The operating modes (synchronous running, positioning mode or contouring control) are selected via the control word (Sy.43 or Sy.50).

If PS.00 bit 0...3 contains the value 7:

SY.50: control word (low) / SY.43: control word (long)			
Bit	Meaning	Value	Explanation
12/13	Operating mode	0: off	
		4096: synchronous running	Selection of operating mode synchronous running
		8192: positioning	Selection of operating mode positioning
		12288: contouring control	Selection of operating mode contouring control

PS.00 can only be written if the modulation is switched off, SY.50 can always be written. The synchronous module must be activated by an input. Which input is to be used is determined via parameter PS.02 "posi / sync input selection".

7.12.3.6 Synchronous mode / activation and synchronization

7.12.3.6.1 Principle

With the activation of the synchronous module, the relation between master position and slave position is established.

Activation means:
- Synchronous mode is selected in parameter PS.00,
- modulation is enabled,
- the digital input for activation of the synchronous operation is set.

The starting synchronisation begins at the time of activation.

Attention: Gear factor changes, angle correction or similar may not be executed during the synchronisation.

The synchronous module is not deactivated by switching of the modulation. The angle difference is continuously calculated, and, after again switching on the modulation, a synchronisation with ramps is always carried out (independent of the type of initial synchronisation).
The type of the synchronisation at activation of the synchronous running is determined by the setting of "synchronous running / starting ramp (oP.28)" in parameter PS.00 "posi / synchronous mode" and by the parameter PS.05 "starting offset" .

7.12.3.6.2 Synchronization at limit

The starting ramp must be deactivated for synchronization at torque limit.

PS.00: Posi / synchronous mode			
Bit	Meaning	Value	Explanation
10	Synchronous running / starting ramp (oP.28)	0: off	No starting ramp for synchronisation at the start of the synchronous running.

Furthermore value 0 must be entered in parameter PS.05 "start offset".

This parameterization is only reasonable if master and slave rotate with the same speed at the start of the synchronous operation, thus a synchronisation is unnecessary. If the speeds are different, the synchronisation occurs in the following manner:

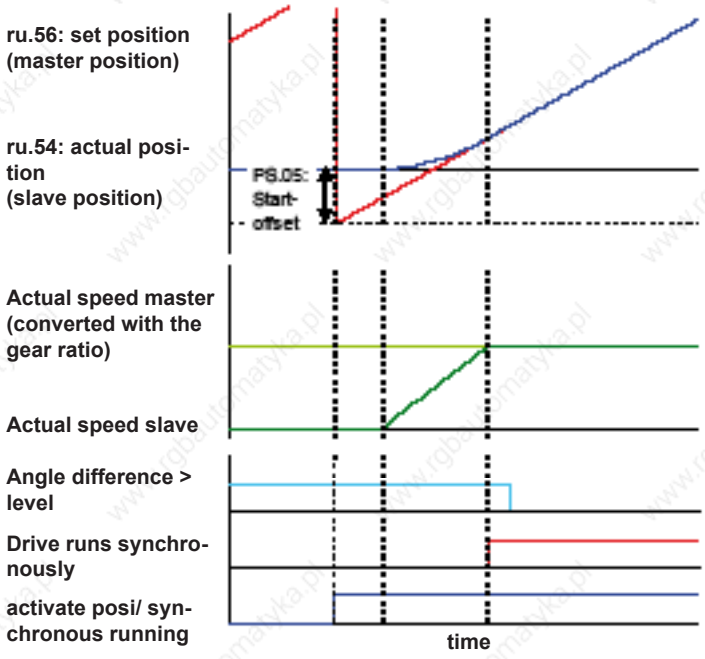

At activation of the synchronous module, the set position is set to the actual position.

The setpoint speed of the slave is set to the actual speed of the master.
The difference to the master position is corrected by the position controller.
Maximum speed of the slave:

master speed + PS.09

The switching condition "drive running synchronously" is met with activation of the synchronous mode.

To recognize the instant at which both drives are actually running synchronously, the switching condition "angle difference < level" must be linked with the signal "drive running synchronously".

7.12.3.6.3 Synchronization with constant path

For the synchronisation within a constant path, the starting ramp must be deactivated.

PS.00: Posi / synchronous mode			
Bit	Meaning	Value	Explanation
10	Synchronous running / starting ramp (oP.28)	0: off	No starting ramp for synchronisation at the start of the synchronous running.

The distance the master is made during synchronisation is entered in parameter PS.05 "start offset". The slave drive calculates internally the acceleration / deceleration times on which it reaches the master speed within the adjusted distance. , The master position is set to the slave position if the master has travelled the programmed distance.

Example:

Let the master speed be 1500 rpm. Let the encoder type be an incremental encoder with 2500 pulses. Let "multiple evaluations" be set to the value "2: 4-fold".

This results in 10000 increments / revolution * 1500 U / 60s = 250000 increments/ s

If the value 250000 increments is adjusted in PS.05, the slave must accelerate to the master speed PS.05 in 1s.
The disadvantages of this type of initial synchronization are described as follows:

- The synchronisation path is set via parameter PS.05 "start offset", making it difficult to realise an offset between master and slave at the start.

- Checking whether the synchronisation was successful is not possible. If the slave drive cannot follow the calculated ramp (e.g., due to reaching the torque limit), the master position is still set to the slave position. The angle synchronicity is lost thereby (for the example above, the connection to the position of the switch "activate synchronous running" would be lost). The switching condition "drive running synchronously" is also still set in spite of the angle error.
- Even if the slave drive can generally follow, system deviations can distort the accuracy of the angle-synchronous running.

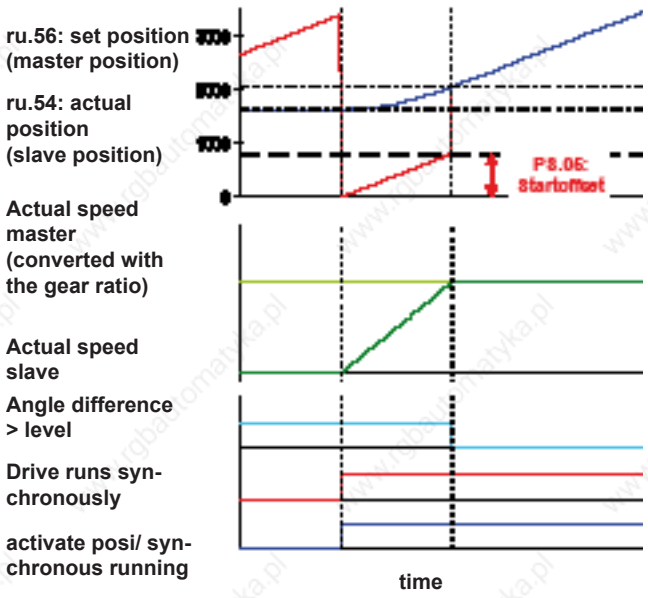

The master position (set position) is set to 0 at the activation of the synchronous module.
If the master has travelled the programmed distance in PS.05, the master position is set to the slave position.

The slave drive calculates the acceleration / deceleration ramps it needs to reach the master in this time.
The ramp time also depends on the master speed and the value in PS.05.
After the master has travelled the distance PS.05, the master position (set point position) is overwritten with the slave position (actual position).

7.12.3.6.4 Synchronization with ramp

Synchronization with ramp is the most comfortable method for the initial synchronization. It is always used for synchronization after interruption of the synchronous running due to switching off the modulation.

PS.00: Posi / synchronous mode			
Bit	Meaning	Value	Explanation
10	Synchronous running / starting ramp (oP.28)	1024: off	Synchronization at the start of the synchronous running with the ramp times for acceleration / deceleration, clockwise rotation

With activation of the synchronous module, the master position (set point position ru.56) is set to the slave position (current position ru.54).

The slave accelerates with the predefined ramps, to follow the master.

Because of the different speeds of master and slave, an angle difference occurs. This missing distance to reach the master position is made up for by increasing the slave speed beyond the master speed. The slave calculates a setpoint speed profile, which allows it to make up for the angle difference.
Maximum speed for this setpoint profile is the maximum setpoint oP.10 / oP.11. If the drive cannot follow the setpoint speed profile, the remaining angle difference is eliminated by the position controller. Therefore, the maximum speed during the synchronisation phase is oP.10 / oP.11 + position controller limit PS.09. This value is still limited by the absolute maximum setpoints (oP.14 / oP.15).

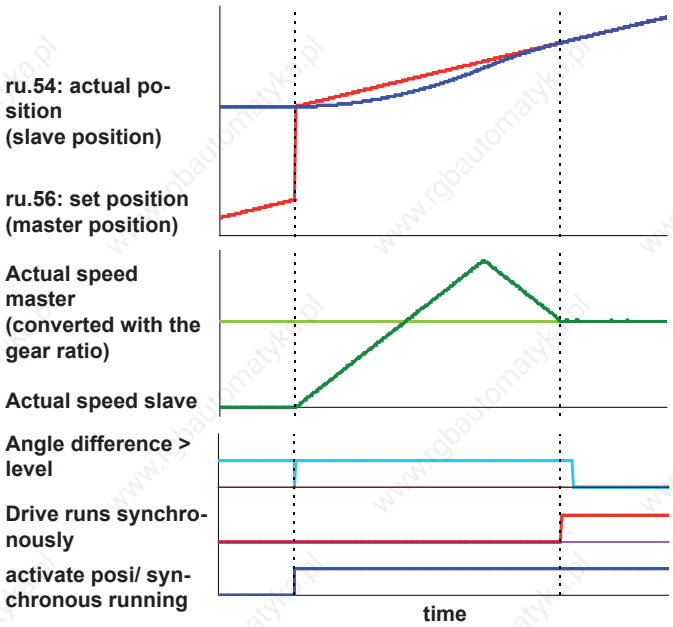

At the start of the synchronous running, the master position (set point position ru.56) is set to the slave position (actual position ru.54).
The slave accelerates and compensates the lost distance.
The ramps must be adjusted by such way that the slave drive can follow without reaching the torque limits.
The switching condition "drive running synchronously" is set if the calculated setpoint speed profile for reaching the master position is completed.
If, e.g., the torque limit is reached, angle synchronicity is not given at that time.
If achievement of a specific angle accuracy has to be checked, the switching condition "drive running synchronously" must be linked with the switching condition "angle difference < level".

As soon as the slave reaches the last phase of the synchronization(that means: the last deceleration or acceleration to the master speed), the ramp can deviate from the programmed values. This is the case if the master speed is not constant, i.e., if adjustments still have to be made during the running-in. Adjustments of the values for acceleration or deceleration are not accepted anymore during this phase.
Additionally, an offset can be entered in parameter PS.05 "start offset" to run the master offset to the slave . The master position is set to the value slave position – PS.05 upon activation of the synchronous running.
That means: ru.56 = ru.54 – PS.05 (at the time of activation)

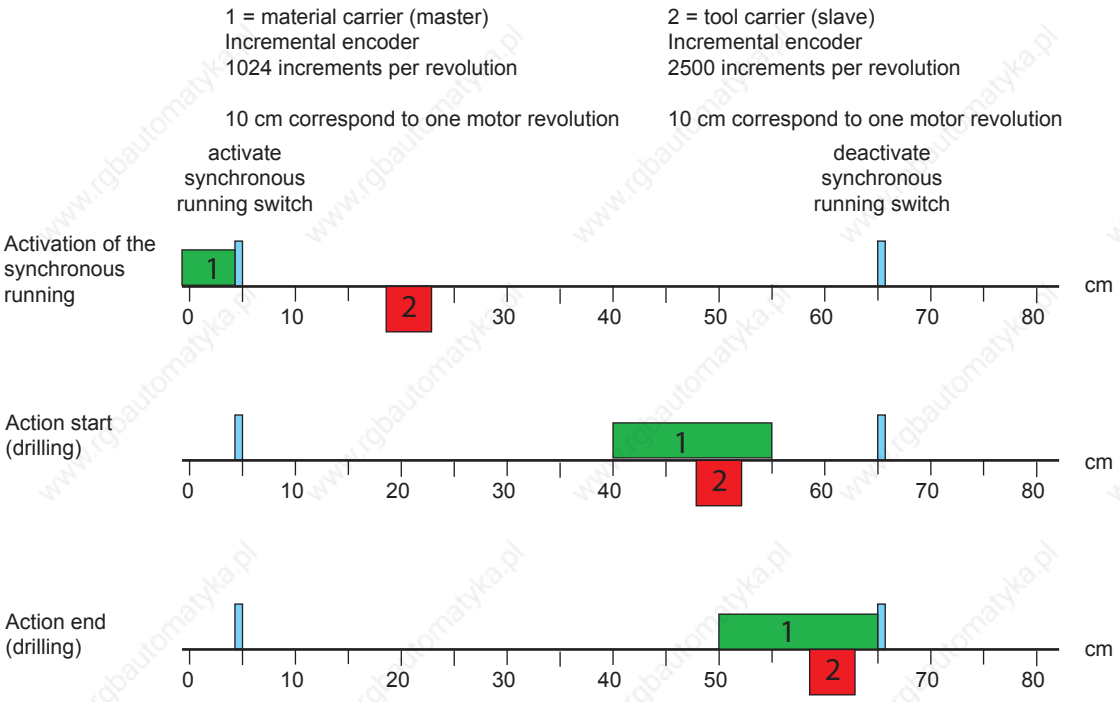

The master drive is a material carrier (e.g., a conveyor belt), on which materials (e.g., boards) are transported at variable speed.
The leading edge of the material crosses an indicator and thereby activates the synchronous running of the slave drive.
The slave is a tool carrier (transporting, e.g., a drill drive). As long as there is no board, it remains at a defined resting position (20 cm).
The hole should be drilled 5cm from the front edge while the conveyor is running.
The slave must run absolutely angular-synchronously to the master during the drilling.
When the board reaches the second switch, the drilling process must be completed safe. The synchronous running is deactivated and now the slave can (e.g., in positioning operation) run back to the starting position.
From the activation of the synchronous running to the start of the drilling, the master must travel 50cm and the slave 30cm.
In parameter PS.05 "start offset", therefore, an offset of 20cm, converted to increments, must be entered.

For the example above:
- 10cm = 3 motor rotations => 20cm = 6 motor rotations
- 2500 encoder / 4-fold evaluation => 10000 increments per revolution
- PS.05 = 6 * 10000 = 60000 increments

During the acceleration phase to the master speed, the slave runs with average speed:

$$\frac{\text{initial speed, slave} + (\text{master speed} - \text{initial speed, slave})}{2}$$

In our example:

the real master speed is 500 rpm
the master needs 1 motor revolution for 10cm, the slave 3 motor revolutions
=> EC.14 = 3000 / EC.15 = 1000

The master speed converted to the slave standardisation therefore is 1500 rpm.
The slave speed at the start is zero. Let the acceleration time be 0,2s (per 1000 rpm).

For the acceleration from 0 to 1500 rpm the slave therefore needs 0,3s. The mean speed in the acceleration phase is 750 rpm = 12.5 U/s. Each revolution corresponds to 10,000 increments.

This results in an acceleration path of:

12,5 U/s x 10000 increments / U x 0,3s = 37500 increments

The master (converted to slave standardisation) constantly runs with 1500 rpm = 75000 increments in 0,3s. The difference between master and slave is 37500 increments. PS.05 is 60000 increments.

The slave has to wait until the master has still travelled 22500 increments and then synchronises itself without overshooting according to the adjusted ramp.

Master and slave are running at the correct offset angle after 37500 increments = 3.75 revolution = 12.5 cm of the slave. They are synchronous starting at the drill head position 32.5cm.

7.12.3.7 Gear factor

The gear factor between master and slave is entered in the parameters for the encoder channel connected to the master position. Normally, this is encoder channel 2. Therefore, the gear factor must be entered in EC.14 (or EC.58) "gear factor 2 numerator" (= gear factor of the slave) and EC.15 (or EC.59) "gear factor 2 denominator" (= gear factor of the master).
The gear factor is not set-programmable. If it is to be adjusted set-dependently, this can be implemented by appropriately setting the analog parameters (see chapter 7.15.9). Value „1: motor potentiometer“ must be selected as source in An.53.The motorpoti value (OP.52) is set-programmable.
Control by means of an analog channel is also possible via the analog parameter setting.

The new gear factor during the active synchronous operation changes (at equal actual speed of the master drive) the master speed expressed in the scale of the slave. An angle difference occurs through the different speed of master and slave and the slave must be synchronized again.

PS.00: Posi / synchronous mode			
Bit	Meaning	Value	Explanation
11	Synchronous running / gear factor ramp (oP.28)	0: on	The slave carries out the new synchronisation using the acceleration /deceleration times for clockwise rotation. The sequence corresponds to the initial synchronisation with ramps (see instructions in item 7.12.3.5.4), only that the parameter PS.05 "starting offset" has no effect. The treatment of the switching condition "drive running synchronously" corresponds to the behaviour during initial synchronisation with ramps.
		2048: off	The slave carries out the synchronisation without ramps at the speed / torque limit. This setting can be useful if the gear factor is changed continuously via the analog channel. The switching condition "drive running synchronously" remains set.

If the gear factor change is smaller than 0.5%, the change is applied without ramp.

7.12.3.8 Angular correction

With parameter PS.04, an angle offset between master and slave can be created or eliminated in synchronous operation.
With the positive edge of the input selected in parameter PS.03 "slave adjustment input selection", a positive adjustment is triggered.

The value of PS.04 is added to the master position, i.e.,:
ru.56 "set position" (corrected) = ru56 "set position" + PS.04

With the positive edge of the input selected in parameter PS.10 "slave adjustment inverse input selection", a negative adjustment is triggered.

The value of PS.04 is subtracted from the master position, i.e.,:
ru.56 "set position" (corrected) = ru.56 set position – PS.04
The value of PS.04 can be positive or negative.

The adjustment is always made with the synchronisation via ramps (see item 7.12.3.5.4), to avoid torque surges in the drive. The treatment of the switching condition "drive running synchronously" corresponds to the behaviour during initial synchronisation with ramps.

The angle adjustment can, e.g., be used to align master and slave after the approach to reference point in the inching mode.

7.12.3.9 Angular reset

An input can be defined via the parameter "reset master/slave difference input selection" (ps.11) that sets the current angle difference between master and slave to zero.

At the rising edge of the input, the master position (= ru.56 "set point position") is set equal to the slave position (= ru.54 "actual position"). Resetting the angle adjustment is done without ramps. The switching condition "drive running synchronously" remains set.

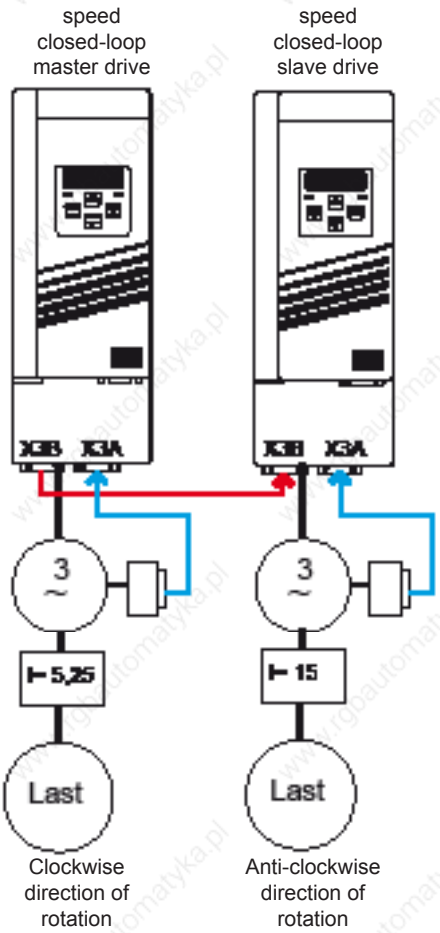

Example of a printing press:

An F5-S serves as master shaft.
X3B of the master is incremental encoder output.
The incremental encoder analogue provides 2048 increments per revolution.
The master transmission has a gear ratio of 15 to 1.

An F5-S serves as slave.
X3B of the slave is incremental encoder input.
The slave transmission has a gear ratio of 5 to 1.

Parameter list for the slave shaft:

Parameter		Value	Notice
cs.00	Controller configuration	4: vector controlled	
cs.01	Actual value source	0: Channel 1	Speed feedback is channel 1
PS.00	Posi-/Synchronous mode	1: Synchronous mode	
PS.01	Master source	1: Channel 2	Master position via channel 2
PS.02	Posi / synch input selection	1: ST (X2A.16)	Synchronous running active, as soon as control release is given
PS.06	KP pos/syn	100	Kp unequal 0 => angular-synchronous
Ec.14	Gear factor channel 2 numerator	5	Slave / master gear
Ec.15	Gear 2 nominator	15	

7.12.4 Posi mode

7.12.4.1 Selection of operating mode

The positioning module contain two operating modes:

- "positioning mode" (chapter 7.12.4) with its sub-functions
  - Single positioning
  - Sequential positioning (sequence control system)
  - Rotary table positioning
  - defined stop
  - Remaining distance positioning
  - Flying Referencing
- "Contouring control" (chapter 7.12.5)

The operating mode is selected via parameter PS.00 bit 0...2.

PS.00: Posi / synchronous mode			
Bit	Meaning	Value	Explanation
0...2	Posi / synchronous mode	0...4	Without function for positioning
		5: Posi mode	Selection of operating mode "positioning mode"
		6: Contouring control	Selection of operating mode "contouring control"
		7: Via control word	The operating modes (synchronous running, positioning mode or contouring control) are selected via the control word (Sy.43 or Sy.50).

The positioning module must be activated by an input. The input is selected in parameter PS.02 "Posi/Sync. input selection".

7.12.4.2 Posi mode / principle

In the positioning mode, the drive can approach a single position or sequences of positions can be programmed that are reached consecutively, and, respectively, are passed through with a defined speed.
Up to 32 positions can be stored in the inverter. For every position, a maximum profile speed can be programmed.
To be able to report various operating condition (e.g., positioning active, target reached) to an overriding control, specific progress messages and switching conditions exist for the digital outputs.
The drive can be adapted very flexible to the application, since different reactions are programmable, e.g. at a new target setting during running positioning it can be selected between:

- do not allow generally
- allow only in certain actual position range
- allow only if the new target can be reached with the adjusted ramps
- allow even if the drive first overshoots the new target, reverses, and then reaches the target
- etc.

The response to errors can be similarly flexible.
At each positioning, the inverter calculates in 1ms-cycle a speed and position that the drive should have at that time, to reach the target in compliance with all settings.

This is the so-called speed / position profile.

Settings	
Maximum acceleration / deceleration	Defined by acceleration / deceleration time (oP.28...oP.31)
Maximum jerk	Defined by S-curve times (oP.32...oP.35 and oP.70...oP.73)
Maximum speed during positioning	= ru.63 "profile speed" + PS.09 "posi/ syn position limit. The profile speed is either PS.25 "index / speed" or PS.31 "max. speed %" * oP.10 "max. setpoint clockwise rotation" (dependent on PS.00/ bit 4). The speed limits oP.10 / oP.11 "max.setpoint" do not act as setpoint limits anymore. oP.14 / oP.15 "abs.max.setpoint" remains operative. The error "speed limit exceeded" is triggered when crossing the trigger level oP.40 / oP41.

That results in the following example behaviour of position, speed, acceleration, and jolt:

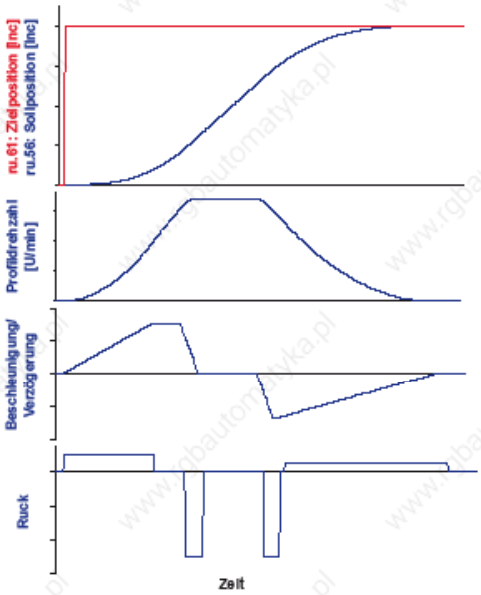

If the drive cannot follow the position profile (e.g., due to reaching the torque limits), the position controller intervenes and changes the setpoint speed with respect to the profile speed. Thereby it is possible that the programmed values for maximum acceleration / deceleration and maximum jolt are exceeded.

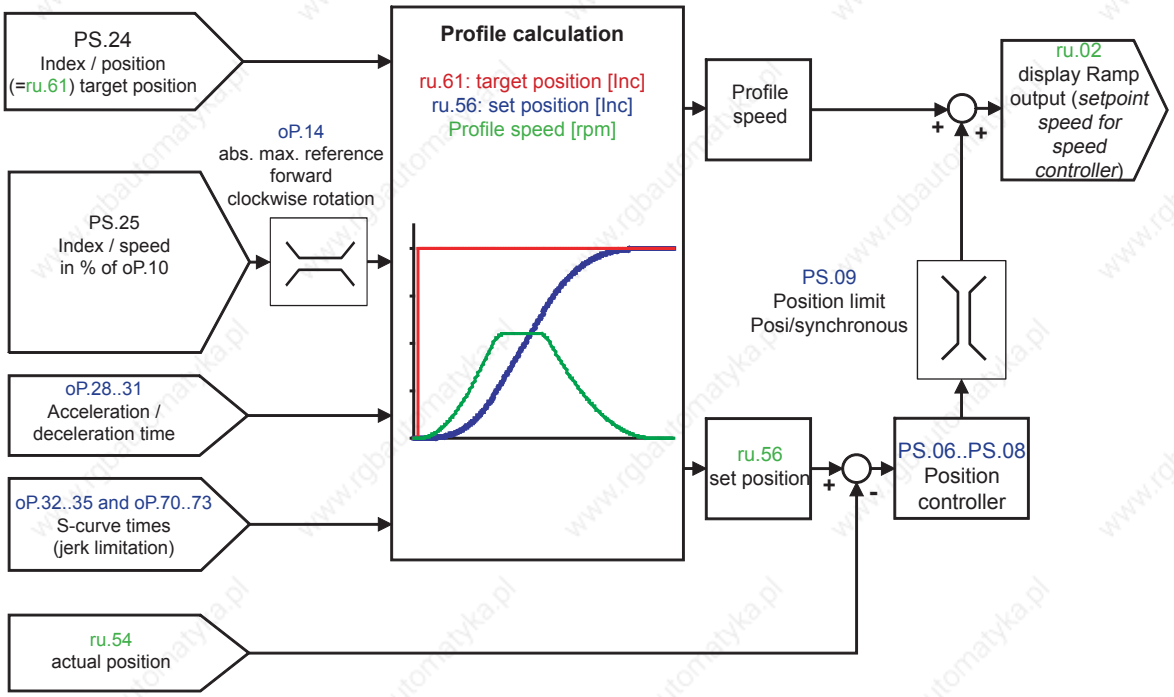

7.12.4.3 Posi mode / premise

To activate the positioning module, the following conditions must be met:

- Start-up in the vector controlled operation must be completed successfully.
- The position feedback must be defined (in PS.01 "master source", select the appropriate encoder interface and make the adjustments required for the encoder type in the Ec-parameters).
- An input for the activation of the positioning module must be defined (PS.02 "positioning / synchronous input selection").
- If hardware limit switches are to be used, two inputs must be programmed with the functions „32: forward“ and „64: backward“ and wired with the hardware limit switches.Additionally, the protection function in Pn.07 "limit switch error response" must be activated.
- If an absolute position reference is required, a reference point switch must be wired and an approach to reference point must be executed or an absolute encoder for the position feedback must be used.
- It must be defined how the positioning is to be started (e.g., digital input, selectable via PS.29: "start positioning input selection" or control word).
- The value for the position controller (PS.06 "KP for positioning / synchronous") must be set to a small value for the start-up to avoid vibrations. If the basic start-up has completed successfully, the position controller must be adjusted application-specific.

Note: after activation of the positioning module, the drive remains in vector controlled operation until the first "start positioning" command has been executed. Parameter ru.00 shows, with the progress message "121: ready for positioning", that the positioning mode has been activated. The drive, though, only enters position controlled operation after the first "start positioning". The position controlled operation is ended as soon as the positioning module is deactivated.

7.12.4.4 Position normalisation

The resolution of the position display/ setting is done in increments and depends on the used encoder system.

The following cases must be differentiated:

7.12.4.4.1 Position control by the motor encoder

Position control is based on the motor position encoder. I.e., the position values refer to the motor position.
The number of increments per motor revolution amounts to "encoder increments per revolution" x 2 "multiple evaluation".
If encoder interface 1 (X3A) is used, Ec.01 "encoder increments per revolution 1" and Ec.07 "multiple evaluation 1" must be used for the calculation.
If encoder interface 2 (X3B) is used, the number of increments per motor revolution must be calculated correspondingly from Ec.11 "encoder increments per revolution 2" and Ec.17 "multiple evaluation 2".
If the position control is done directly on the motor encoder, the same encoder channel must be selected in PS.01 "master source" and cS.01 "actual value source".
Value 1 (i.e. gear factor numerator = gear factor denominator) must be selected for the gear factors..

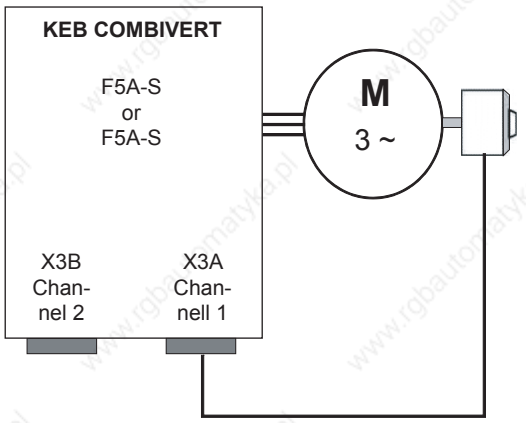

Example:

Let an incremental encoder with 2500 increments be connected to encoder channel 1.
The motor shall travel 5.5 revolutions

Revolution in increments:
cS.01 = PS.01 = 0: Channel 1
Ec.04 = EC.05 = 1000 default value
Ec.01 = 2500 increments per revolution
Ec.07 = 2: 4-fold evaluation
→ 2500 x 2^2 x 5,5 = 55000 increments

7.12.4.4.2 Positioning by the output

The position control is done directly on the value of the output encoder. I.e., the position values refer to the position of the load.
Number of increments per load revolution = "encoder increments per revolution" (output encoder) x 2 "multiple evaluation". Typically, the encoder interface 1 (X3A) is used for the motor position encoder and the encoder interface 2 (X3B) for the output encoder.

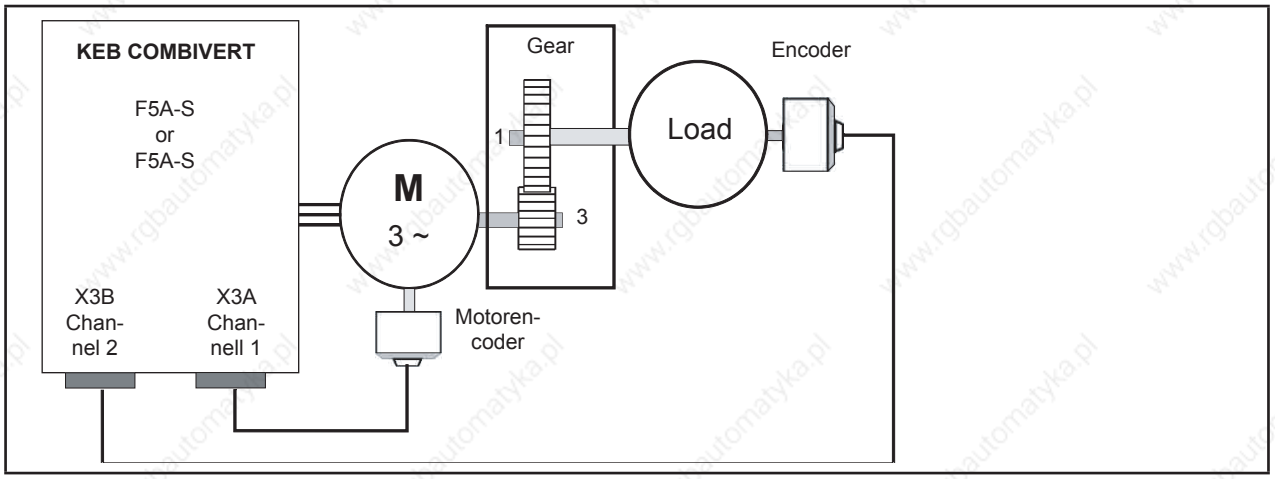

To allow calculation of the speed precontrol profile for the speed control, the gear factor between motor and load must be known, to convert the precontrol profile to the motor speed.
The speed limits and the values for maximum profile speed (PS.25) and maximum position control effect (PS.09) refer to the motor speed.

Example:

Encoder channel 1:	Incremental encoder with 2500 increments per revolution
Encoder channel 2:	SSI encoder multiturn with 12bit resolution per revolution and 12bit multiturn
Gear ratio:	3 motor revolutions cause 1 load revolution

cS.01:	Actual value source	= 0	Channel 1
Ec.01:	encoder 1 (inc/r)	= 2500	Line number
Ec.07:	Enc. 1 trigger	= 2	4-fold evaluation
PS.0:	Master source	= 1	Channel 2
Ec.11:	Encoder 2 (inc/r)	= 1024	12 bit resolution per revolution
Ec.17:	Enc. 2 trigger	= 2	
Ec.21:	SSI Multiturn-resolution	= 12	12 bit Multiturn-resolution
Ec.14:	Gear 2 numerator	= 3000	Gear factor =3
Ec.15:	Gear 2 denominator	= 1000	

The load shall travel 5.5 revolutions: $1024 \times 2^2 \times 5{,}5 = 22.528$ increments

7.12.4.4.3 Speed and position control by motor encoder/ encoder mounting via gear

Mounting of the encoder for the speed control via a gear is not ideal, since the tolerance of the gearbox and the gear ratio of gear 1 affects the control quality and dynamic of the speed controller (and thus also the higher-level position control).

Two reasons can make this set-up necessary:

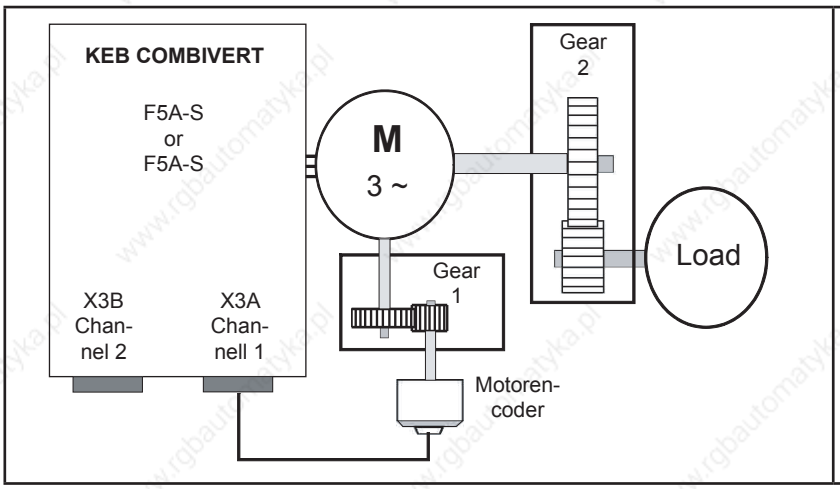

Application 1:

Directly mounting the encoder to the motor is not possible for mechanical reasons.

Referencing the load position is not possible.

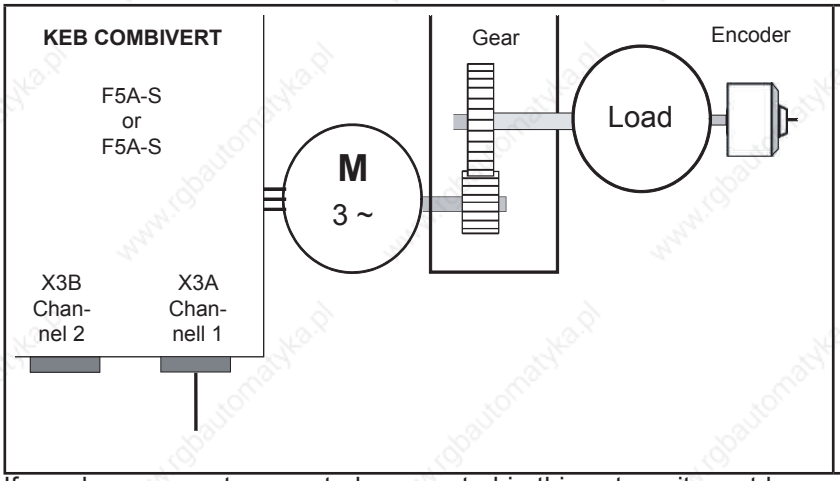

Application 2:

One wants to run with only one encoder which must be installed behind the gear for reasons of positioning accuracy.

If synchronous motors are to be operated in this set-up, it must be ensured that the gear ratio is < 1 and the value of pole-pair number x gear factor is integer.

Example:

3 encoder revolutions correspond to one motor revolution

Pole-pair number = 15

→ Gear factor = 1/3 = 0,333

→ pole-pair number x gear factor = $\frac{15}{3}$ = 5 = whole-numbered → synchronous motor operation possible

The number the increments per motor revolution is calculated as:

"encoder increments per revolution" * 2 "multiple evaluation" x "gear factor denominator" / "gear factor numerator"

The number of increments per load revolution for application 2 is equal to:

"encoder increments per revolution" * 2 "multiple evaluation".

The encoder should always be connected to channel 1, since the software for this channel optimally supports the motor encoder connection via gear. Parameter Ec.39 „encoder 1 over transmission“ must be set to value „1: motor encoder“.(For further functions and settings of Ec.39 see chapter 7.11)

Example (application 1):

Encoder channel 1:	Encoder with 32 SIN / COS signals per revolution
Gear ratio:	Motor to encoder = 3 encoder revolutions correspond to motor revolution = 1 to 3

cS.01:	Actual source (= PS.01)	= 0	Channel 1
Ec.01:	encoder 1 (inc/r)	= 32	number SIN / COS signals
Ec.07:	Enc. 1 trigger	= 9	512-fold evaluation of the analog tracks
Ec.04:	Gear 1 numerator	= 1000	Gear factor 0,333
Ec.05:	Gear 1 denominator	= 3000	
Ec.39:	Encoder 1 over gear	= 1	Encoder mounting via gear

The motor shall travel 5.5 revolutions → $32 \times 2^9 \times 3000 / 1000 \times 5{,}5 = 270336$ increments

Example (application 2):

Encoder channel 1:	SSI encoder multiturn with 12bit resolution per revolution and 12bit multiturn
Gear ratio:	Motor to encoder = 5 motor revolutions correspond to motor revolution = 5 to 1

cS.01:	Actual source (= PS.01)	= 0	Channel 1
Ec.01:	encoder 1 (inc/r)	= 1024	12-bit resolution per revolution
Ec.07:	Enc. 1 trigger	= 2	Multiple evaluation with SSI encoder always = 2
Ec.53	Encoder 1 SSI multiturn.	= 12	12 bit Multiturn-resolution
Ec.04:	Gear 1 numerator	= 1000	Gear factor 0,333
Ec.05:	Gear 1 denominator	= 3000	
Ec.39:	Encoder 1 over gear	= 1	Encoder mounting via gear

The load shall travel 5.5 revolutions: → $1024 \times 2^2 \times 5{,}5 = 22628$ increments

If parameter Ec.39: encoder 1 over transmission is set to „0: off“, the inverter is compatible with older software versions, that do not include Ec.39 yet.

The operation of synchronous motors is not supported and the position normalisation is as follows:
The number the increments per motor revolution is calculated as:
"encoder increments per revolution" x 2 "multiple evaluation"

The number of increments per load revolution for application 2 is equal to:
"encoder increments per revolution" x 2 "multiple evaluation" x "gear factor numerator" / "gear factor denominator"

With Ec.39 = 0 (=off), therefore, the meaning of the position display and setting (the position normalisation) is changed.

7.12.4.5 Posi mode / actual position

The encoder interface for the feedback of the position control is adjusted via PS.01.

PS.01 master source	
Value	Function
0: Channel 1	Encoder channel 1 (X3A)
1: Channel 2	Encoder channel 2 (X3B)

If the positioning mode is selected in parameter PS.00 „positioning / synchronous mode", the actual position (ru.54) is taken from the encoder channel that is set in „master source“ PS.01. This also applies if the positioning module is not activated (i.e., the input selected in PS.02 is not set).

If the positioning mode is deactivated in PS.00 , the actual position of the encoder channel set in "actual value source" cS.01 is evaluated.

To obtain a reference point for the actual position at speed encoders without absolute position information (e.g. incremental encoder), anapproach to reference point must be executed (see chapter 7.12.2).
This determines which mechanical position, e.g., should be related to the value 0 in parameter ru.54 "actual position".

7.12.4.6 Posi mode / set and target position

In positioning mode, there are two parameters that provide information about the set point position:

Parameter ru.61 "target position" shows the target position for the running positioning, i.e., the position the drive should have reached at the end of the positioning.
Parameter ru.56 "set point position" displays the position the drive should have reached currently.
This position is the setpoint for the position controller. It is calculated in the inverter in 1ms cycles, dependent on the adjusted ramp times and the permitted positioning speed.

Special function for position detection systems with high deceleration (e.g., some opto-electronic distance measurement systems):

In parameter Ec.46 "PT1-time channel 1", or Ec.47 "PT1-time channel 2", one can enter the time by which the position information from the measurement system is delayed.

If a PT1-time is defined for the encoder channel entered in PS.01 as feedback for the position control, the setpoint position ru.56 is also delayed by that time. Thereby, the position controller does not respond to the position difference caused by the time delay of the measurement system. Since these position differences do not really exist, their masking improves the control characteristic of the position controller.

The difference between the set point position ru.56 and the actual position ru.54 is displayed in parameter ru.58 "angle difference".

7.12.4.7 Posi mode / single positioning

To execute a single positioning, the following initial settings must be entered:

- Operating mode "Posi mode" must be selected (see chapter 7.12.4)
- PS.23: Index / selection = 0
- PS.26: Index / next = "-1: PS.28"
- PS.28: Start index new profile = 0
- PS.27: Index / mode → „Continue the profile processing“ = „no“

The target position is set in parameter PS.24 "Index / position" in increments (scaling factor of the position settings).

In parameter PS.27 "Index / mode", the traversal manner (relative or absolute) is set.

PS.27: Index mode			
Bit	Meaning	Value	Explanation
0	Continue of the profile processing	0: no	must always be set to „0: no“ at single positioning.
1..3	Position setting	0: absolute	The position is given as an absolute value.
		2: relative	The new position is set relative to the previous set point position. The direction (right or left of the old set point position) is determined by the sign of the new position setpoint PS.24.
		6: relative to PS.38 (FR)	The new position is set relative to the previous target position. The direction (right or left of the old target position) is determined via a digital input (selectable via PS.38 and via the Input function "relative position F / R" in the parameters di.24...di.35, respectively). The sign of the position setpoint is disregarded.
		4	For special functions "defined stop" (see chapter 7.12.4.11)
		8, 10, 12	For special functions "rotary table" (see chapter 7.12.4.10)
		14	reserved

In parameter PS.00 is defined how the maximum profile speed is to be set:

PS.00: Posi / synchronous mode			
Bit	Meaning	Value	Explanation
4	Positioning / target speed	0:PS.25 / PS.25	The maximum profile speed is set via PS.25 "Index / speed". It is acquired at the time of the "start positioning" command and can not be changed thereafter for the positioning in progress. The drive stops at the target position.
		16:PS.31 / PS.25	The maximum profile speed is calculated from: PS.31: "max.speed %" x oP.10: "max.reference forward" A change of the maximum profile speed during the current positioning is possible.

Instructions for value 16:

If, during the current positioning, the value of PS.31 or oP.10 changes, the new profile speed is always acquired. The drive runs (in compliance with the acceleration-, deceleration- and jolt-setpoints) to the new target speed. The maximum profile speed can, therefore, be changed during a running positioning by writing to PS.31 via the communication interface.

Alternatively, a change via an analog input is also possible:
For that purpose, enter in parameter An.53 "analog parameter default / source", e.g., the AUX-channel (value = 0), and program the bus address from parameter PS.31 (value = 131Fh) in parameter An.54 "analog parameter default / target". One can now adjust the maximum profile speed via the AUX-input (see also chapter 7.15.9).

The parameter PS.25 must be set to the value "0" , so that the drive stops at the target. If PS.25 contains a value unequal to 0, the drive reaches this speed at the target position and continues running constantly at that speed.

Example for a single positioning:

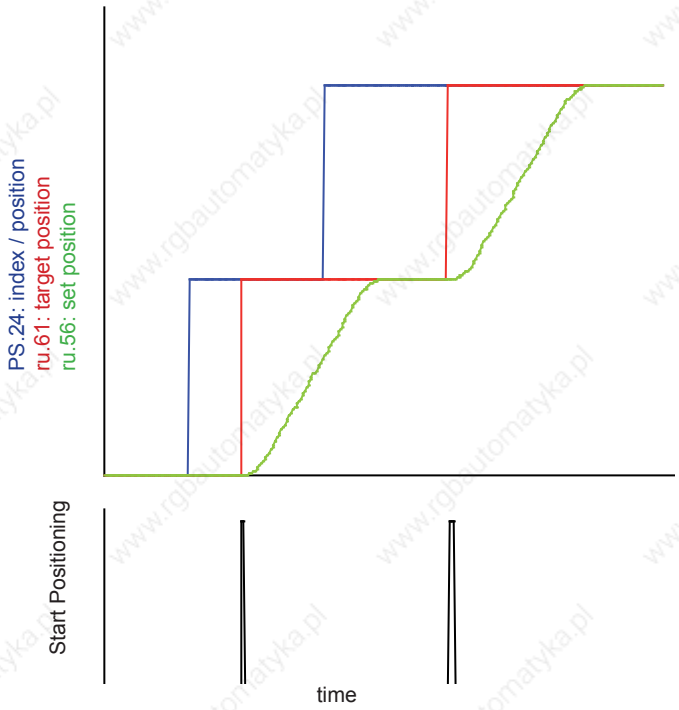

In PS.24, the position setpoint is specified. The positioning mode is "absolute".
With the signal "start positioning" (function and definition, see chapter 7.12.1.2), the position setpoint is assumed as the new target position.
Corresponding to the predefined profile, the set point position runs to the target position.
During (status ru.00 = 122: „positioning active“) or after positioning (status ru.00 = 121: ready for positioning), a new position setpoint can be defined which then becomes the new target position with the next „start positioning“ command.

Example for a single positioning with variable maximum profile speed:

PS.00 bit 4 = 16
For an application, the drive shall always run with a lower profile speed between 2 positions (e.g., joint in traversing rail). By switching the set, parameter oP.10 is decreased in this range.
After reaching this range, the drive decelerates according to the adjusted deceleration and jolt values to the new maximum profile speed. This insures that during every positioning to an arbitrary position, the maximum speed for this range is observed without the need for intervention by a superior control.

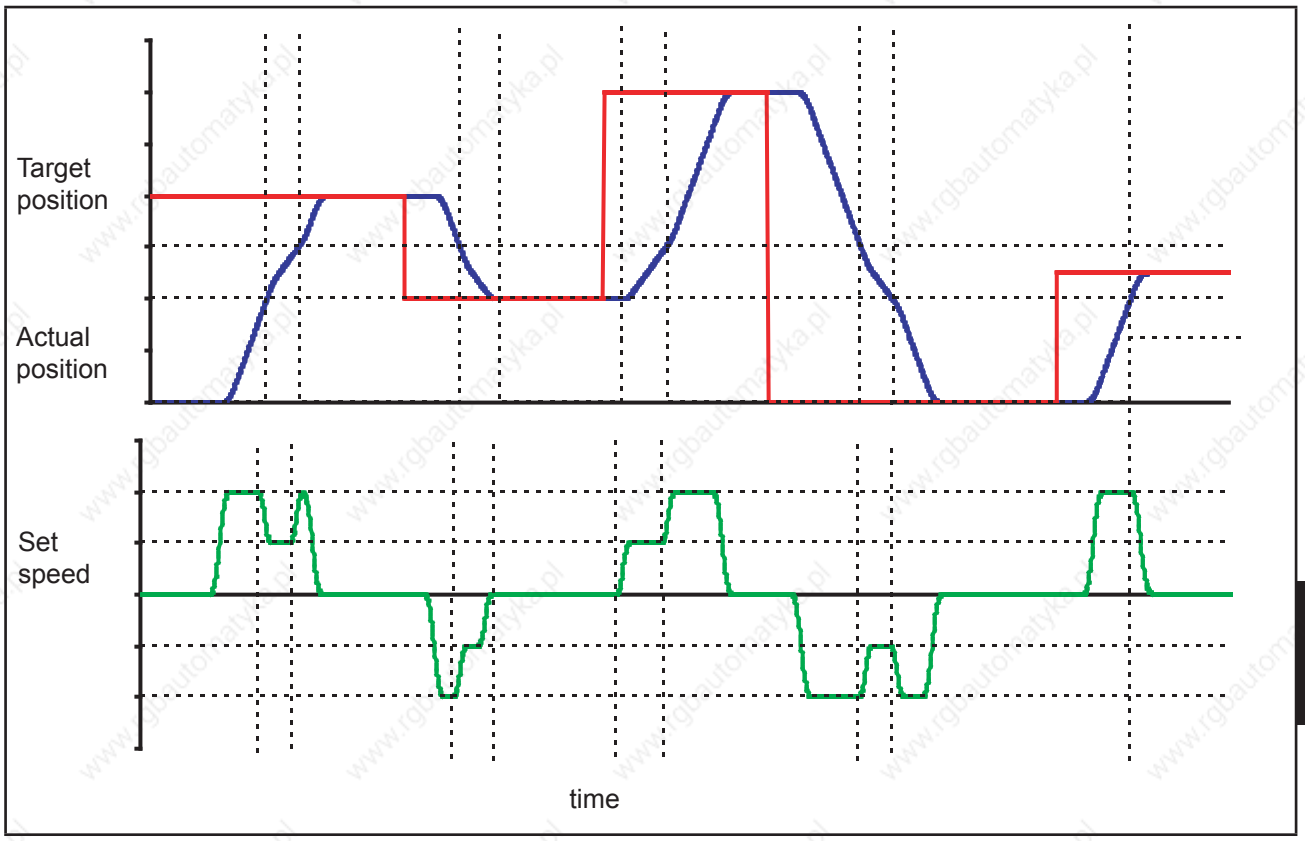

7.12.4.8 Posi mode / sequential positioning

With the sequential- or index-positioning, it is possible to run to several positions consecutively and, respectively, traverse these with a defined speed.
Sequential positioning is meant, if several target positions are defined in the inverter which are to be processed in a fixed sequence.

A possible example for a sequential positioning would be a drive that lowers a drill head. The drilling process shall consist of 5 positioning steps:

- fast lowering of the drill with speed A from the starting position "0" up to position "1" ("1" = position just before the material surface)
- slow penetration into the material (position "1" to "2") at speed B
- somewhat faster lowering (at speed C) during drilling of the material up to position "3"
- withdrawal of drill from the material at speed D, back to position "1"
- return to starting position "0" at speed A and stop there

This whole process can be realised using the sequential positioning.
To that end, so-called "blocks" are defined for every positioning step. Each block is marked by an index (i.e., numbered).

Each block contains the following information:

- PS.23: Index / selection → number (index) of the block
- PS.24: Index / position → target position for these block
- PS.25: Index / speed → maximum profile speed and target speed (the exact function depends on the programming of PS.00 bit 4 and is explained later)
- PS.26: Index / next → contains the number of the block to be completed next
- PS.27: Index / mode → defines the traversal manner (relative or absolute) and determines whether the next positioning step (the next index) is started automatically
- PS.46: rel.correction switch forward / PS.47: rel.correction switch reverse → are only needed for special applications. The default setting is 0: off. Description of the function in chapter 7.12.4.13 "flying referencing with correction")

Maximally 32 blocks can be programmed. There are two possibililties to define the maximum profile speed:

PS.00: Posi / synchronous mode			
Bit	Meaning	Value	Explanation
4	Positioning / target speed	0:PS.25/ PS.25	Each block has its own maximum profile speed. The maximum profile speed is set via PS.25 "Index / speed". It is acquired at the time of the "start positioning" command and can not be changed thereafter for the positioning in progress. The speed at which to pass through the target is determined by the PS.25 of the following block.
		16:PS.31/ PS.25	The maximum profile speed is defined for all blocks via PS.31 . A change of the maximum profile speed during the current positioning is possible. The maximum profile speed is calculated from:PS.31: "max.speed %" x oP.10: "max.reference forward". The speed at which to pass through the target is determined by the PS.25 of the current positioning step. If the drive is to stop at the target, the target speed must be PS.25 = 0.

There are 2 possibililties for the positioning process that are distinguished by PS.27 bit 0:

PS.27: Index mode			
Bit	Meaning	Value	Explanation
0	Continue of the profile processing	0: no	Approach a position and wait for a new "start positioning" command. Only after this occurs will the following block be completed (approach the next position). This is necessary if the drive has to come to a standstill at a position to, e.g., allow processing of a workpiece. The signal "target window reached" is set. The signal to continue can come from an external control that supervises the processing. It can also be generated automatically by a "timer" integrated into the inverter software. (Descriptions of the timers in the context of the "start positioning" generation see example 4 in this chapter).
		1: yes	Automatic start of the next positioning step (defined in PS.26) without a new "start positioning" command being necessary (as in the drill head example). The drive does not stop at the target, but drives across it with the speed chosen as positioning speed in the following block (PS.25 of the following block). (Exception: if in PS.00 the setting of the profile speed by PS.31 is selected, then the target is crossed with the speed set in the current block in PS.25). The switching condition "target window reached" is not set since this is only an "intermediate target".
1..3	Position setting	0: absolute	The position is given as an absolute value.
		2: relative	The new position is set relative to the previous target position. The direction (right or left of the old target position) is determined by the sign of the new position setpoint PS.24.
		6: relative to PS.38 (F/R)	The new position is set relative to the previous target position. The direction (right or left of the old target position) is determined via a digital input (selectable via PS.38 and via the Input function "relative position F / R" in the parameters di.24...di.35, respectively). The sign of the position setpoint is disregarded.
		4	For special functions "defined stop" (see chapter 7.12.4.11)
		8, 10, 12	For special functions "rotary table" (see chapter 7.12.4.10)
		14: reserved	**Do not adjust!**

In parameter PS.28 "starting index new profile", the block with which the sequence begins is defined.

PS.28: Start index new profile	
Value	Function
0...31	Number of the block with which the positioning sequence starts after the first "start positioning" command.

Start means the first positioning after:

- Activation of the positioning mode (e.g., by "power on" / setting of the input for activation of the positioning mode / activation of the positioning mode via PS.00 or the control word).
- Discontinuation of a running positioning (e.g., error message of the inverter / switching off of the control release or new "start positioning command" during a running positioning).

To clearly explain the sequential positioning, four examples are listed in the following:

- Sequential positioning with automatic continuation and definition of the profile speed by PS.25 (drill head positioning).
- Sequential positioning with stop between the separate positioning steps. New start pulse by external control required for each step. Definition of the profile speed by PS.25 (positioning of a workpiece for various processing steps).
- Example 3 is a variation of example 2. The profile speed is defined by PS.31 instead of PS.25 . PS.31 is defined via an analog input.
- Sequential positioning with stop between the positioning steps. The length of pause is adjustable. The new start pulse is generated automatically. Definition of the profile speed by PS.25. Utilisation of the timer functionality and of the input / output handling of the inverter for generation of an automatic sequence control (positioning of a workpiece for various processing steps)

If these detailed examples are not required, continue reading in chapter 7.12.4.10 positioning mode/ round table.

Example 1: Realisation of the boring head positioning

Sequential positioning with automatically continuation and definition of the profile speed by PS.25.

Settings:

- Let the position at which the positioning process starts have the value 0.
- Driving to this position (whether after "power on", after error or as part of the positioning process) can always occur at maximum speed = 1500 rpm.
- Let the position just before the material surface have the value 95,000. The speed at that point is to be 250 rpm.
- The penetration is completed at position 100,000. Here, the drive may again have accelerated to 500 U/min. At that speed, drilling is continued up to position 150,000.
- The withdrawal from the material back to position 95,000 shall occur at 700 rpm.
- Thereafter, the drill head returns to the starting position at 1500 rpm.
- The drilling process is followed automatically.

To solve this problem, several approaches are possible. An exact description of the available parameters and alternative settings follows later in this chapter.

Adjustments:

PS.00: Posi / synchronous mode			
Bit	Meaning	Value	Explanation
0..2	Posi / synchro-nous mode	5: Posi mode	Activation of the positioning mode
4	Positioning / target speed	0:PS.25 / PS.25	The maximum profile speed is set via PS.25 "Index / speed". The speed at which to pass through the target is determined by the PS.25 of the following block.

All other bits can remain at the factory settings for this example and are explained in the following chapters.

- Block 0 defines the start position → PS.28 = 0

- block 0 → PS.23: Index / selection = 0
  Position = 0 → PS.24: Index / position = 0
  Permitted max. speed = 1500 rpm → PS.25 = 1500 rpm
  next positioning step defined in block 1 → PS.26 = 1
  no automatic start of the drilling process, but wait for "start positioning" command, i.e., "continuation of the profile processing" = 0:no and "position setpoint" = 0: absolute
  → PS.27 = 0: no + absolute

- block 1 → PS.23: Index / selection = 1
  Position = material surface → PS.24: Index / position = 95000
  Advance to material surface → PS.25 = 1500 rpm
  next positioning step defined in block 2 → PS.26 = 2
  automatic continuation of the drilling process, i.e., "continuation of the profile processing" = 1:yes and "Position setting" = 0:absolute → PS.27 = 1: yes + absolute

- block 2 → PS.23: Index / selection = 2
  Position = end of penetration → PS.24: Index / position = 100.000
  max. speed penetration → PS.25 = 250 rpm
  next positioning step defined in block 3 → PS.26 = 3
  automatic continuation of the drilling process → PS.27 = 1: yes + absolute

- block 3 → PS.23: Index / selection = 3
  Position = end of drilling → PS.24: Index / position = 150.000
  max. speed drilling → PS.25 = 500 rpm
  next positioning step defined in block 4 → PS.26 = 4
  automatic continuation of the drilling process → PS.27 = 1: yes + absolute

- block 4 → PS.23: Index / selection = 4
  Position = material surface → PS.24: Index / position = 95.000
  max. speed retraction → PS.25 = 700 rpm
  Retraction to starting position defined in block 0 → PS.26 = 0
  automatic retraction to starting position → PS.27 = 1: yes + absolute

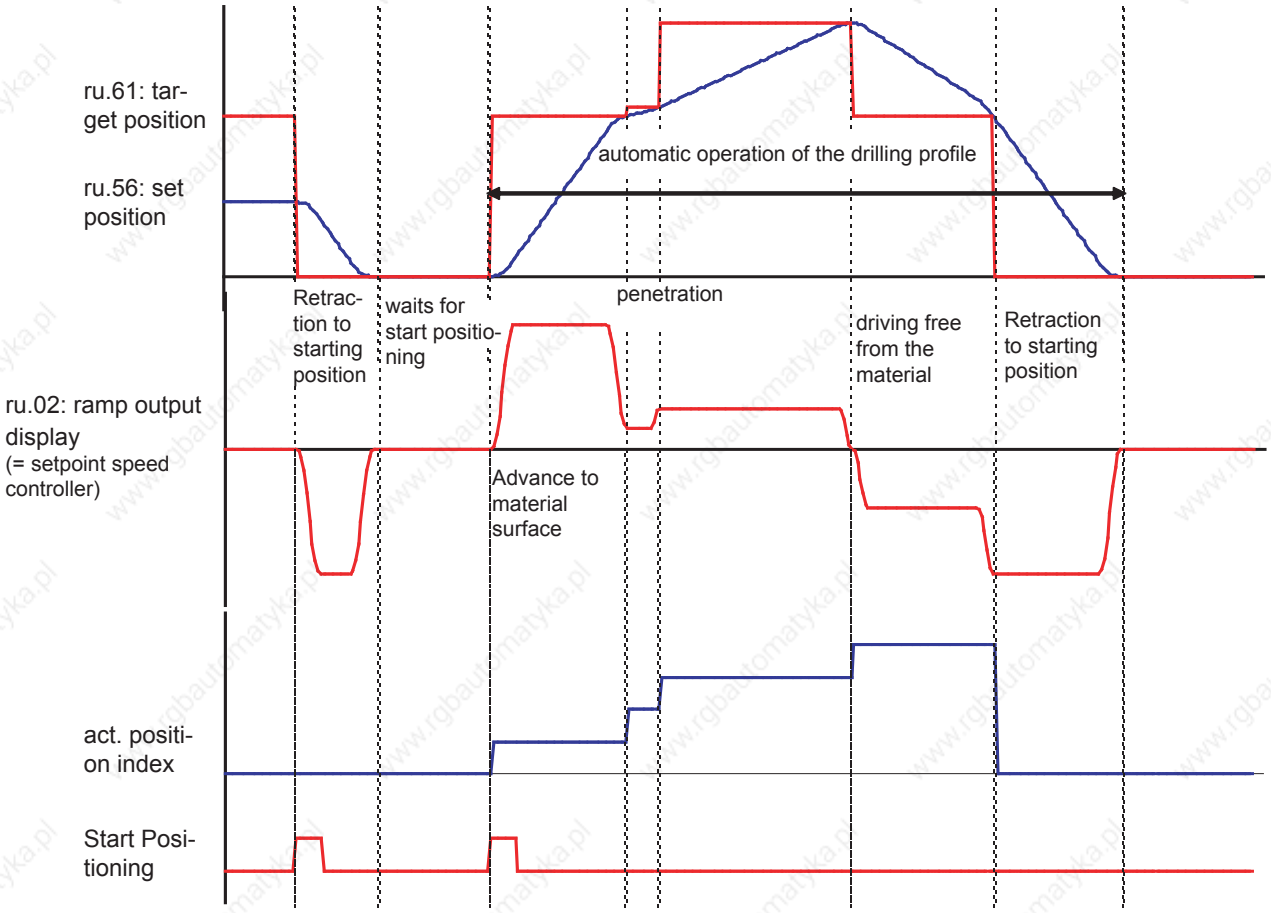

In the example above, the drive did not stop after each step in the drilling process, instead, the target position of the individual steps was crossed already at the speed set for the next drilling step. I.e., the parameter PS.25 "index/ speed" defines the positioning speed for a block, while the value of PS.25 of the following block determined the speed at which the target position is crossed.
For example: the "penetration block" is block 2. The speedduring penetration (positioning speed) is the value of PS.25 in block 2 = 250 rpm.
The drilling is to continue with 500 rpm, so the drive already accelerates at the end of the penetration to the drilling speed of 500 rpm, i.e., the value of PS.25 in block 3. The speed at which the target of block 2 is passed (= the target speed) is also determined by block 3 (the following block).
If the drive has to reverse to reach the next target (change the direction of rotation) or if the next target shall not be driven to automatically (PS.27: "continuation of the profile processing" = no), the target speed of a block automatically becomes 0 (standstill at target).

Example 2: Positioning of a workpiece for various processing steps/ sequence control by external control

Sequential positioning with stop between the positioning steps and definition of the profile speed by PS.25.

Settings:

- The drive shall stop at each position to allow processing of the workpiece, until the external control gives the signal to continue, i.e., "start positioning". The external signal comes from input I3. The drive shall signal the control via an output that it has reached the current target with an accuracy of 10 increments, so that the processing can begin.

- Let the position at which the workpiece starts have the value 0.
- Driving to this position (whether after "power on“, after error or as part of the positioning process) can always occur at maximum speed = 1500 rpm.
- The first stop shall be at position 100,000. The profile speed up to that point shall be 1000 rpm.
- The second stop shall be at position 200,000. The profile speed up to that position shall again be 1000 rpm.
- After that, the drive shall return to its starting position with maximally 1500 rpm.

Adjustments:

- PS.00:

PS.00: Posi / synchronous mode			
Bit	Meaning	Value	Explanation
0...2	Posi / synchro-nous mode	5: Posi mode	Activation of the positioning mode
4	Positioning / target speed	0:PS.25 / PS.25	The maximum profile speed is set via PS.25 "Index / speed".

All other bits can remain at the factory settings for this example and are explained in the following chapters.

- Block 0 defines the start position → PS.28 = 0

- Input I3 serves as "start positioning" → PS.29 = 64: I3 (X2A.12)

- block 0 → PS.23: Index / selection = 0
  Position = 0 → PS.24: Index / position = 0
  Permitted max. speed = 1500 rpm → PS.25 = 1500 rpm
  next positioning step defined in block 1 → PS.26 = 1
  no automatic start, but wait for "start positioning" command, i.e., "continuation of the profile processing" = 0:no and "position setpoint" = 0: absolute
  → PS.27 = 0: no + absolute

- block 1 → PS.23: Index / selection = 1
  Position = first stopping point → PS.24: Index / position = 100.000
  speed up to the first stopping point → PS.25 = 1000 rpm
  next positioning step defined in block 2 → PS.26 = 2
  Stop at the position, i.e., "continuation of the profile processing" = 0:no / "position setpoint" = 0:absolute → PS.27 = 0: no + absolute

- block 2 → PS.23: Index / selection = 2
  Position = second stopping point → PS.24: Index / position = 200000

speed up to the second stopping point → PS.25 = 1000 rpm
next positioning step back to start → PS.26 = 0
stop at the position → PS.27 = 0: no + absolute

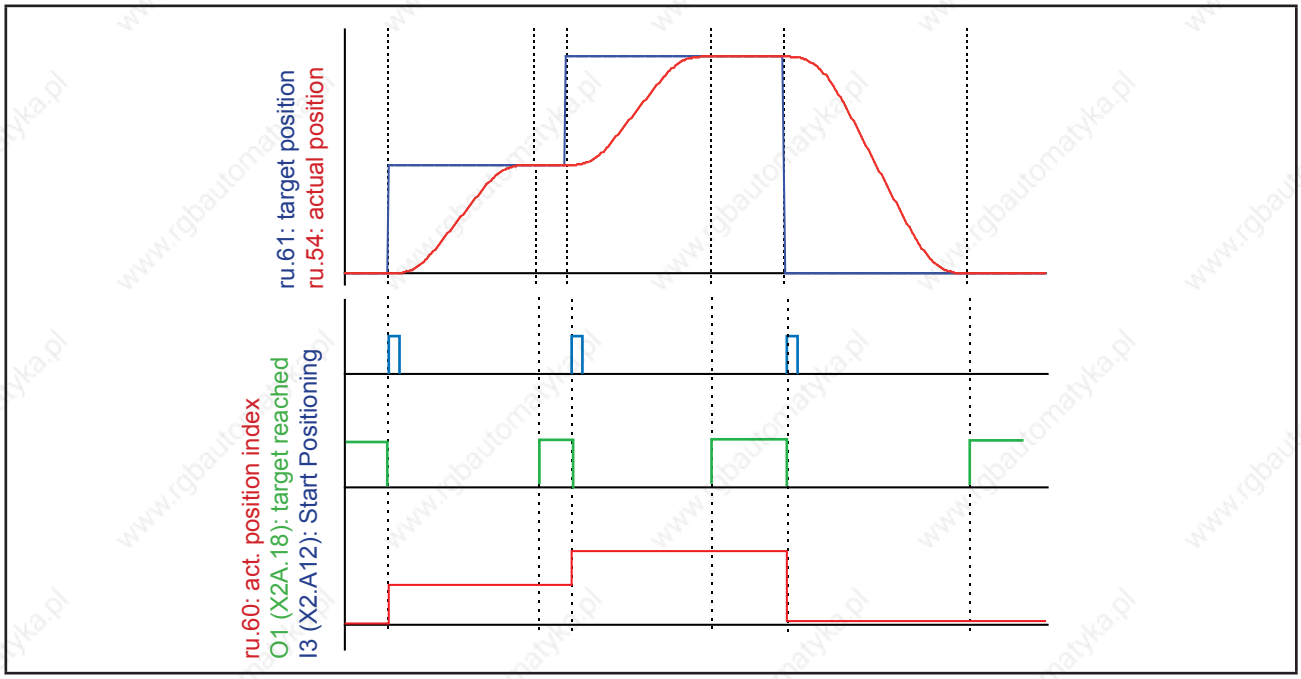

Example 3: Positioning of a workpiece for various processing steps / sequence control by external control / analog setting of the maximum profile speed

Sequential positioning with stop between the positioning steps and definition of the profile speed by PS.31 / oP.10.

Settings:

- The drive shall stop at each position to allow processing of the workpiece, until the external control gives the signal to continue, i.e., "start positioning". The external signal comes from input I3. The drive shall signal the control via an output that it has reached the current target with an accuracy of 10 increments, so that the processing can begin.

The maximum profile speed shall be set via the analog input AN2 (X2A.3 / X2A.4):

- Let the position at which the workpiece starts have the value 0.
- The first stop shall be at position 100,000.
- The second stop shall be at position 200,000.
- After that, the drive shall return to its starting position

Adjustments:

● PS.00:

PS.00: Posi / synchronous mode			
Bit	Meaning	Value	Explanation
0...2	Posi / synchro-nous mode	5: Posi mode	Activation of the positioning mode
4	Positioning / target speed	16: PS.31 / PS.25	The maximum profile speed is set via PS.31 "Index / speed". The drive is to stop at the target, so the target speed must be PS.25 = 0 for all blocks.

All other bits can remain at the factory settings for this example and are explained in the following chapters.

- Block 0 defines the start position → PS.28 = 0
- Input I3 serves as "start positioning" → PS.29 = 64: I3 (X2A.12)
- The maximum profile speed is calculated from:
  PS.31 (max. speed %) x oP.10 (max. reference forward)
  To change this by analog input via AN2, the following settings must be entered:
  (also see chapter 7.15.8: analog parameter setting)

An.30: Sel. REF-inp./AUX-funct.	= 2112	(factory setting)
An.53: Analog para. setting source	= 0: AUX input (ru.53)	(factory setting)
An.54: Analog para. setting de-stination	= 131Fh	(bus address PS.31)
An.55: Analog para. setting / offset	= 0	(factory setting)
An.56: Analog para. setting max. value	= 1000	= 100%
oP.10: Maximal frequency forward	= 1500 rpm	(max.possible profile speed)

An.30 defines that AN2 serves as AUX input.
An.53 defines that the parameter value is set via the AUX input.
An.54 defines the bus address of the parameter to be set by analog input (here, PS.31)
(the bus address of a parameter can be read in Combivis in, e.g., the work list).

An.56 defines the maximum value (unnormalised) for parameter PS.31. The normalised value for PS.31 is then calculated as follows:

100% AUX value = maximum value (An.56) x resolution of the parameter PS.31 (0,1%) =
1000 x 0,1% = 100%

The value of PS.31 therefore corresponds to the AUX-value.

The maximum profile speed is then calculated as follows:
ru.63: Profile speed = PS.31 x oP.10 = AUX x oP.10

- block 0 → PS.23: Index / selection = 0
  Position = 0 → PS.24: Index / position = 0

Drive stops at target → PS.25 = 0 rpm
next positioning step defined in block 1 → PS.26 = 1

no automatic start, i.e., "continuation of the profile processing" = 0: no and "position setting" = 0: absolute → PS.27 = 0: no + absolute

- block 1 → PS.23: Index / selection = 1
  Position = first stopping point → PS.24: Index / position = 100000
  Drive stops at target → PS.25 = 0 rpm
  next positioning step defined in block 2 → PS.26 = 2
  Wait for "start positioning" → PS.27 = 0: no + absolute

- block 2 → PS.23: Index / selection = 2
  Position = second stopping point → PS.24: Index / position = 200000

  Drive stops at target → PS.25 = 0 rpm
  next positioning step back to start → PS.26 = 0
  Wait for "start positioning" → PS.27 = 0: no + absolute

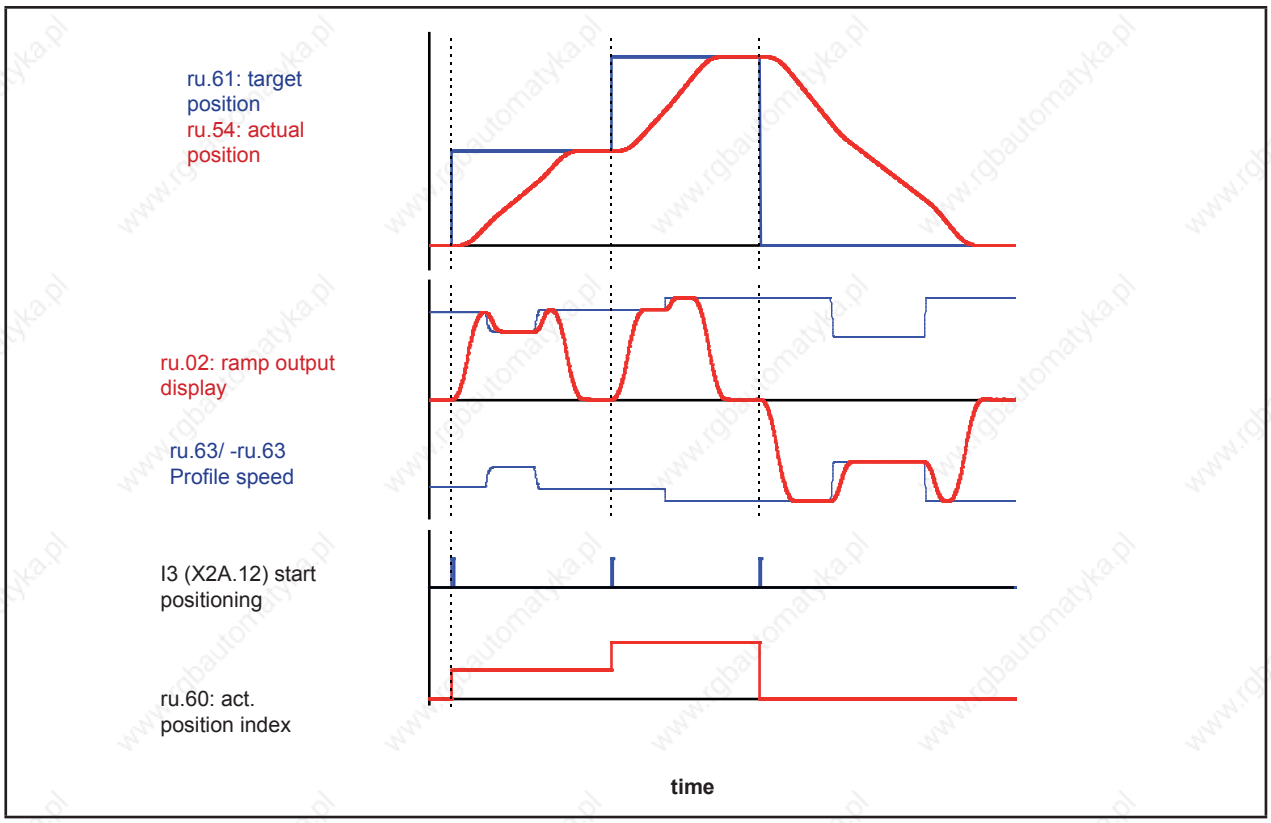

Change of the maximum profile speed is possible at all times. The speed / position profile for each positioning step is adjusted permanently, so that the drive (in compliance with the acceleration and jolt setpoints) is positioned at the maximum permitted speed.

Example 4: Positioning of a workpiece for various processing step / sequence control by timer-functionality and the input / output handling of the inverter

Sequential positioning with stop between the positioning steps and definition of the profile speed by PS.25.

Note: this example requires detailed knowledge of the timer functionality and of the input / output handling. These chapters must therefore be read prior to programming an internal sequence control system. If no internal control is to be implemented, this example can be skipped.

Settings:

- The position at which the workpiece starts has the value 0.
- Driving to this position (whether after "power on", after error or as part of the positioning process) can always occur at maximum speed = 1500 rpm.
- The first stop shall be at position 100.000. The profile speed up to that point shall be 1000 rpm. The stop shall last 500 ms, and the drive shall continue automatically after that time. The drive shall signal the control through an output that it has reached the target with an accuracy of 10 increments, so that the processing can begin.
- The second stop shall be at position 200,000. Let the profile speed to that point again be 1000 rpm. The stop shall last 1200 ms and the drive shall return to the starting position automatically after that time. The drive shall signal the control through an output that it has reached target 2 with an accuracy of 10 increments, so that the processing can begin.

Adjustments:

● PS.00:

PS.00: Posi / synchronous mode			
Bit	Meaning	Value	Explanation
0...2	Posi / synchro-nous mode	5: Posi mode	Activation of the positioning mode
4	Positioning / target speed	0:PS.25 / PS.25	The maximum profile speed is set via PS.25 "Index / speed".

All other bits can remain at the factory settings for this example and are explained in the following chapters.

- Block 0 defines the start position → PS.28 = 0
- Input I3 serves as "start positioning" → PS.29 = 64: I3 (X2A.12)
- Target window size shall be 20 increments (= 2 x accuracy) → PS.30 = 20

  Reaching of the target window shall be indicated by output O1:

  → do.00: Condition 0 = 54: target window reached (positioning)

  → do.16: Condition selection for flag 0 = 1: SB0

  → do.33: Flag selection O1 = 1: M0

- Implementation of the stops:

  If the drive has reached position 1 (PS.24 of block 1) and position 2 (PS.24 of block 2), respectively, it shall remain there 500ms and 1200ms, respectively, and then automatically carry out the next positioning step. To implement this sequence, the timer functionality must be utilised. With reaching of the target of Index 0 or Index 1, Timer 1 must be started. The drive then remains at the target position until the timer has exceeded the time level of 500ms and 1200ms, respectively. Exceeding the time level triggers a "start positioning". With the start of the next positioning, the timer must be stopped and reset.

  The start of the timer must be triggered by a software input. Input IA was chosen here.

  → LE17: Timer 1 start input selection = 256: IA

IA is always then set if software output OA is set.
On reaching of the target of Index 1 or Index 2, Timer 1 must be started (i.e., the software output OA must be set).

Output OA must also be set if the switching condition act.. index = 1 or act.. index = 2 and, simultaneously, the condition "target reached" are met

→ do.00: Condition 0 = 54: target window reached (positioning)	M0 = SB0 = target reached
→ do.16: Condition selection for flag 0 = 1: SB0	
→ do.01: Condition 1 = 72: act. position index = level	SB1: Index = 1
→ LE.01: Comparison level 1 = 1,00	
→ do.02: Condition 2 = 72: act. position index = level	SB2: Index = 2
→ LE.02: Comparison level 2 = 2,00	
→ do.19: Condition selection for flag 3 = 6: SB1+SB2	M3 = SB1 or SB2
→ do.37: Flag selection for OA = 9: M0+M3	OA = M0 and M3
→ do.41: Flag AND/OR conj. = 16: OA	

When the timer has counted 1500ms (for index 1) or 1200ms (for index 2), a "start positioning" signal shall be generated.
As input for the "start positioning" signal, software input IB is used.
→ PS.29 = 576: I3 (X2A.12) + IB

Output OB must therefore be set, when the switching conditions index = 1 (SB1) and timer 1 > 500ms, or index = 2 (SB2) and timer 1 > 1200ms, are met.

→ do.03: Condition 3 = 37: Timer 1 > level	SB3: Timer > 500 ms
→ LE.03: Comparison level 1 = 0,50	
→ do.04: Condition 4 = 37: Timer 1 > level	SB4: Timer > 1200 ms
→ LE.02: Comparison level 2 = 1,20	
→ do.17: Condition selection for flag 1 = 10: SB1+ SB3	M1 = SB1 and SB3
→ do.18: Condition selection for flag 2 = 20: SB2+ SB4	M2 = SB2 and SB4
→ do.24: SB AND/OR conjunction = 6: M1+M2	
→ do38: Flag selection for OB = 6: M1+M2	OB = M1 or M2

The resetting of the timer must be triggered by a software input. Input IC was chosen here.
→ LE.19: Timer 1 reset input selection = 1024: IC
Output OC must therefore be set when the condition "target window reached" is not set.

→ do.31: Inv. flags for OC = 1: M0 OC = NOT M0
→ do.39: Flag selection for OC = 1: M0

- block 0
  Position = 0 → PS.24: Index / position = 0
  Permitted max. speed = 1500 rpm → PS.25 = 1500 rpm
  next positioning step defined in block 1 → PS.26 = 1
  Wait for "start positioning" command → PS.27 = 0: no + absolute

- block 1
  Position = first stopping point → PS.24: Index / position = 100.000
  speed up to the first stopping point → PS.25 = 1000 rpm
  next positioning step defined in block 2 → PS.26 = 2
  Wait for "start positioning" command → PS.27 = 0: no + absolute

- block 2
  Position = second stopping point → PS.24: Index / position = 200.000
  speed up to the second stopping point → PS.25 = 1000 rpm
  Back to start → PS.26 = 0
  Wait for "start positioning" command → PS.27 = 0: no + absolute

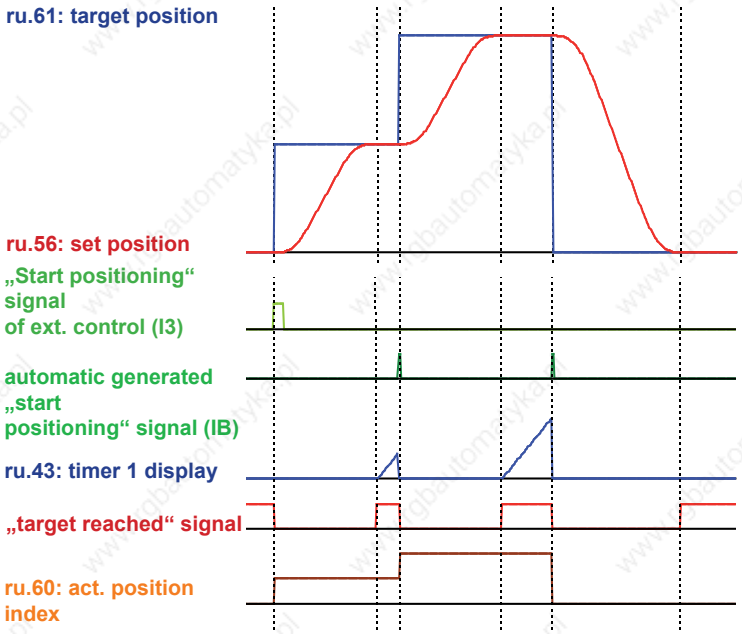

7.12.4.9 Posi mode / Positioning with set changeover

In the positioning blocks, only target position, profile speed, traversal manner and sequence of the positionings are stored. To reach the acceleration /, deceleration time and the S-curves, one must use various sets.
Before the start of a positioning, that set must be activated which contains the desired acceleration and jolt values.
If positions are to be connected directly with certain profiles, the set-programmability of the parameter PS.28 can be utilised.

set-programmable parameters			not set-programmable parameters				
Set	PS.28	OP parameter	PS.23	PS.24	PS.25	PS.26	PS.27
0	0	Ramps and S-curve times (A)	0	Position (A)	Profile speed (A)	-1	no
1	1	Ramps and S-curve times (B)	1	Position (B)	Profile speed (B)	-1	no
2	2	Ramps and S-curve times (C)	2	Position (C)	Profile speed (C)	-1	no
3	3	Ramps and S-curve times (D)	3	Position (D)	Profile speed (D)	-1	no

I.e., in the 4 sets used, the required acceleration and S-curve times are programmed. In each set, a different index is parametrised as the starting index.

7.12.4.10 Posi mode / rotary table

The round table positioning allows positioning within 360°.
Parameter PS.39 "position range" defines the number of increments per one revolution of the rotary table.If the position feedback is not connected to the round table but to the motor, the gear must also be considered.

Example:

The motor must execute 21 revolutions for the round table to complete one full revolution. Let the increments per revolution of the incremental encoder on the motor be 2500 increments (parameter Ec.01) and in parameter Ec.07 "multiple evaluation 1", the value 2 is: 4-fold programmed.
This results in:

$PS.39 = 21 \times 2500 \times 2^2 = 210000$

The actual position and the set point position vary only in a range of 0 to (PS.39 - 1).

Attention: Only positions from 0 to (PS.39 - 1) may be set as target position (PS.24).
Attention: The difference between set point position and actual position may never be greater than PS.39/2, i.e., the drive may not be blocked!

With PS.27, the general round table mode is selected:

PS.27: Index mode			
Bit	Meaning	Value	Explanation
1...3	Position setting	8: Rotary table with path optimization	The position on the round table is always approached on the shortest path , i.e., the drive approaches the position from the right or the left.
		10: Rotary table without path optimization	The position on the round table is always approached from one direction. The sign of the position setpoint determines the direction of the positioning
		12: Round table relative (round axis)	The new target position is set relative to the current target position.
		0, 2, 4, 6, 14	Not for rotary table

The different round table modes were created for different applications.

7.12.4.10.1 Rotary table with path optimization

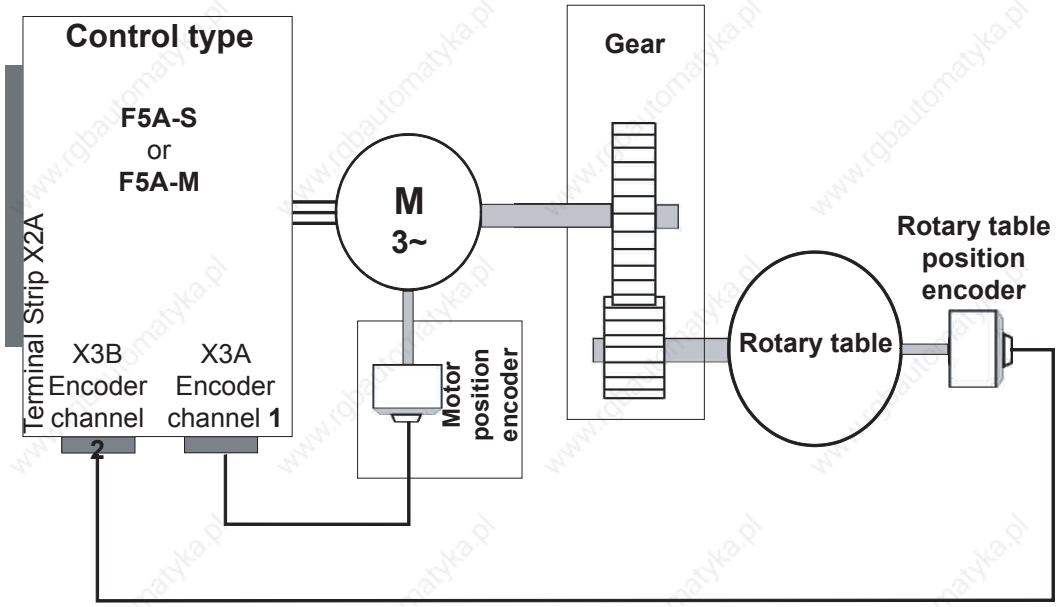

This mode is particularly suitable for round table applications where a second encoder is used for the round table position. Here, the gear backlash cannot cause a position error, and the target position can be approached precisely from both directions of rotation.
Here, the mode 8 "round table with path optimisation" is optimal since the shortest positioning times can be achieved in this mode.
It is a prerequisite that the round table permits rotations in both directions.
The target position may lie only in the range of 0 to PS.39 - 1.

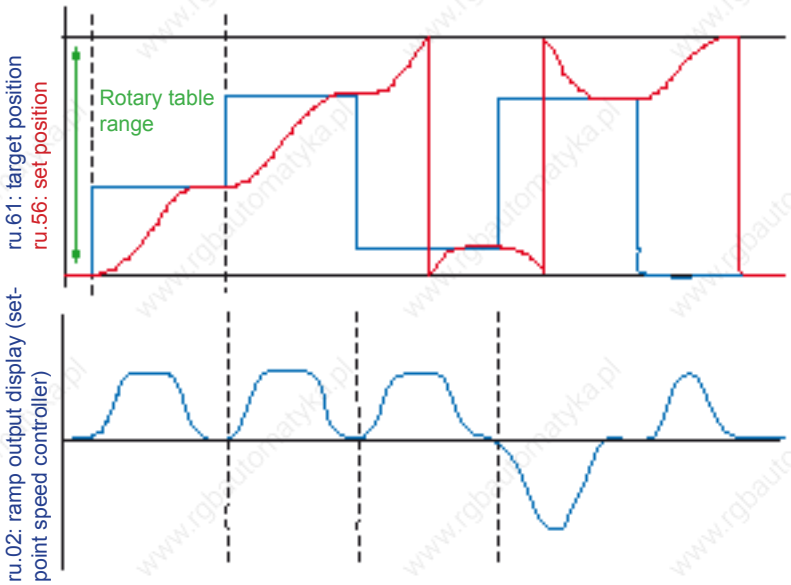

7.12.4.10.2 Rotary table without path optimization

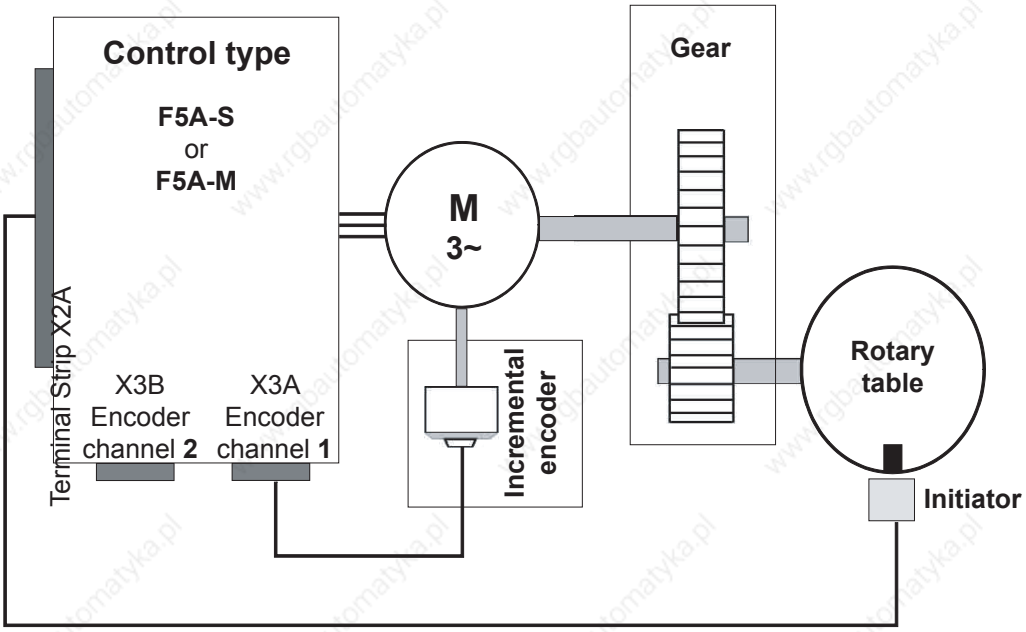

This mode is particularly suitable for round table applications where only one encoder is used for the motor position. The gear between the motor and the round table can cause the position of the round table to be different for identical motor positions, depending on the direction of rotation from which the position was approached. To avoid these problem for applications where the gear backlash cannot be ignored, the target must always be approached from the same direction of rotation. The direction from which a position is approached is determined by the sign of PS.24 "index / position": Positive values mean the position is approached from the right, negative values lead to an approach from the left.

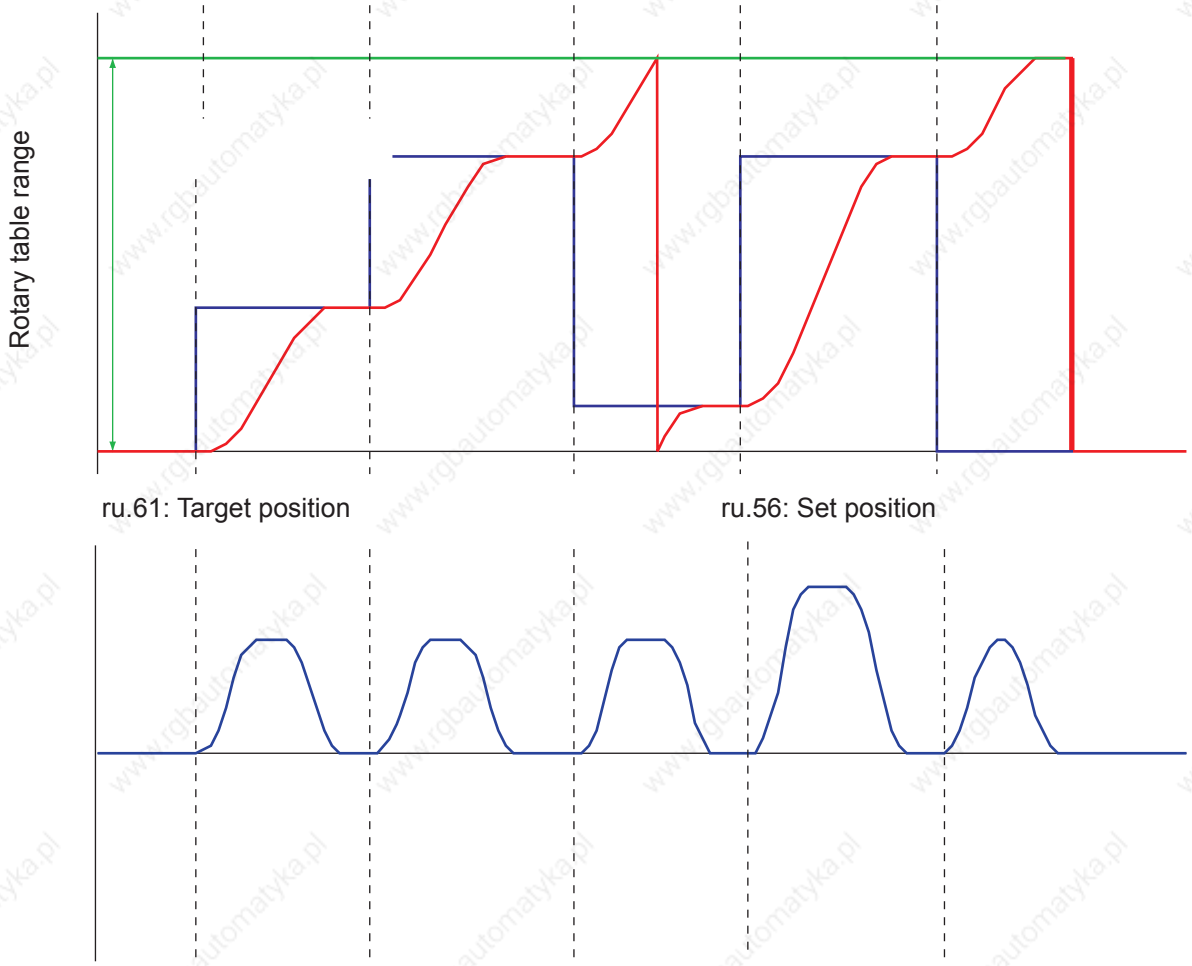

ru.02: Ramp output display (setpoint speed controller)

In this example, all position setpoint in PS.24 are positive. The position values 0 and PS.39 are identical, therefore, the value 0 as well as the value PS.39 can be displayed during traversal of the round table range. Thereby, apparent jumps can occur in the position values if the display changes between the value 0 and PS.39.

Rotary table / flying referencing
If only one encoder is used, the gear can cause a further problem:
If the gear factor x increments per revolution does not result in an integer value, the value for PS.39 cannot be set exactly.

Example:
Let the gear ratio between motor and round table be 50 : 3
encoder increments per revolution = 2500 and multiple evaluation = 2: 4-fold

$$PS.39 = \frac{50}{3} \text{ x encoder increments per revolution x 2}^{\text{multiple evaluation}} = \frac{50}{3} \text{ x } 10.000 = 16.666{,}6666$$

In PS.39, however, only integer values can be entered. Thereby, one obtains (for predominant motion in one direction of rotation) an error that increases with each round table revolution.
To correct for this error, the possibility of flying referencing exists for round table applications.
For that purpose, an initiator is connected to a digital input which generates a pulse at a fixed round table position. Whenever this pulse is recognised, the actual position must be equal to the position of the initiator. If this is not the case, the actual position is set to the initiator position. The setpoint- and target position are corrected by the same value as the actual position.

Example:
The drive rotates clockwise.
The initiator provides a signal at position 1000.
The drive starts at position 0.
The actual position (ru.54) at the time the edge of the initiator is 999.
The set point position (ru.56) is 1002, the target position is 5000 increments.
The value range round table (PS.39) is 10,000 increments.
The actual position is set to 1000, i.e., corrected by +1.
The set point position is set accordingly to 1003 and the target position to 5001.

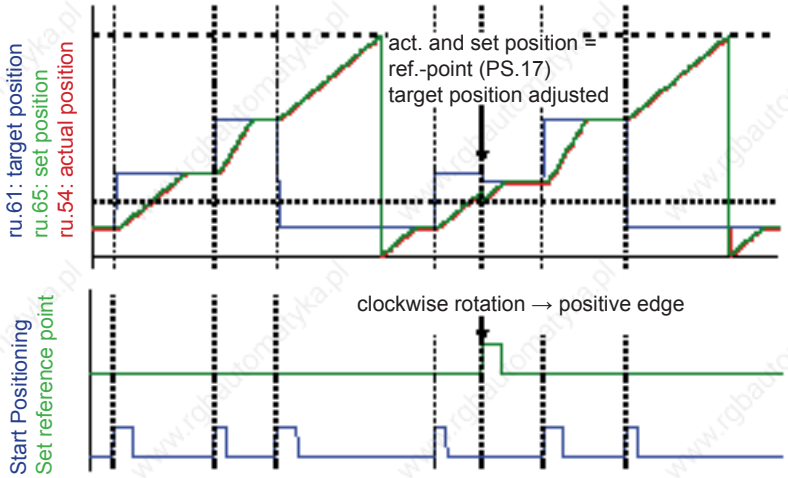

For the positioning for which corrections are made, the value of PS.24 "index/ position", therefore, does not match ru.61 "target position" anymore, instead of the value 5000, positioning is done to 5001.
The next position is again approached corresponding to PS.24, i.e., the value of target position (ru.61) and index / position (PS.24) match. Thereby, the error caused by the noninteger gear ratio is compensated.
Since the initiator signal is longer than one increment, the same point of the initiator must always be used for the adjustment. Therefore, adjustments for clockwise direction of rotation is made as soon as the initiator is reached (positive edge). For counter clockwise direction of rotation links, adjustments are made when the initiator is left (negative edge).

Example: The initiator signal is active from Position 5000 to 5500

To have the adjustment executed always at position 5000, adjustments must be executed at the positive edge for clockwise rotation and at the negative edge for counter clockwise rotation.

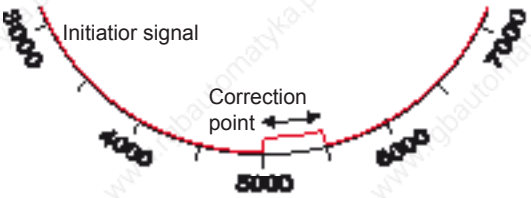

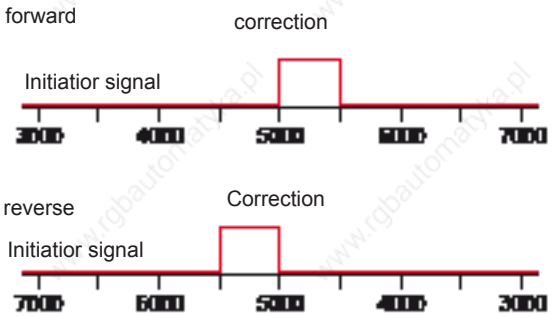

An important point for flying referencing is the suppression of interference pulses that can trigger a referencing at the wrong position.

Basic requirement is the EMC conform installation. The programming of a digital filter in the di-parameters is unsuitable for the flying referencing since the time delay caused by the filter distorts the referencing.
Therefore, there is the parameter PS.40 "reference point window". Only an initiator pulse within the position window of +/- PS.40 around the reference point PS.17 triggers an adjustment.

Example:

PS.17 = 5000 increments / PS.40 = 500
Then, referencing signals are accepted only if the actual position ru.54 is in the range of 4500 to 5500.
The default value for PS.40 is 0, i.e., the interference suppression is switched off.
To receive a warning that interference pulses have occurred, a digital output can be set if a referencing signal occurs outside of the permitted window.
For this, value78 „totary table reference invalid“ must be selected as switching condition in the do-parameters.
The switching condition is reset with the next „start positioning“ command.

7.12.4.11 Posi mode / defined stop

In some applications, a drive shall stop within one revolution at a defined position during vector controlled operation. For such applications, the mode "position specification relative to the null signal" was created.

PS.27: Index mode			
Bit	Meaning	Value	Explanation
1...3	Position setting	4	Relative to zero signal

In this application, the functions "position / synchronous activation" and "start positioning" are connected to the same input. If the signal at this input is not active, the drive runs vector controlled.
If the input is activated, the drive correspondingly delays the defined acceleration-, deceleration- and S-curve-times. Thereby, it positions to the distance to the marker pulse defined in PS.24. How many revolutions it still travels during the delay dependent on the speed and the adjusted ramps. Only the position within one revolution of the position encoder at which the drive stops is defined.
In PS.24 „index/position“, only values from 0 to encoder increments per revolution * 2 multiple evaluation may be entered in this mode.
The direction of rotation from which the position is approached is always the direction of rotation with which the drive ran before activation of the positioning.

Attention: If the modulation is switched off (switch-off of the control release, error) while the drive rests at the

stopping position, the drive will be in vector controlled operation again after switching on the modulation.

Example: Incremental encoder / 2500 increments / 4-fold evaluation

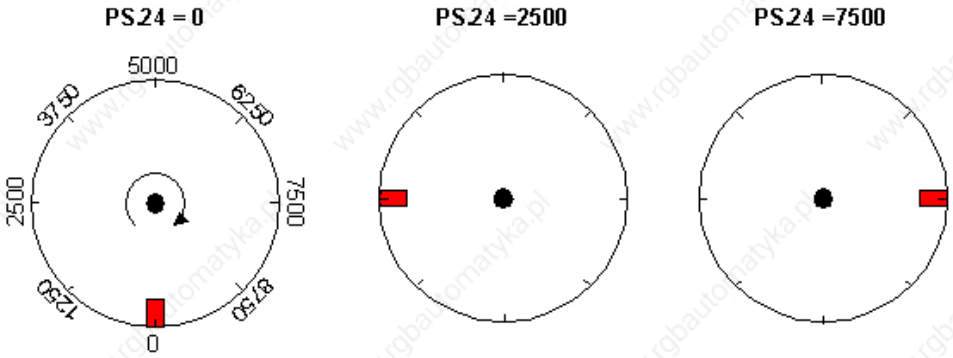

One application would be, e.g., a drill for which the chuck key must always have a defined position during standstill.

7.12.4.12 Posi mode / remaining distance positioning

The remaining distance positioning is similar to the mode defined stop. Only that here, positioning is done to a set distance from a marker, rather than to a defined position within one revolution.
The drive leaves the speed-controlled operation and runs, starting at a marker, the adjusted residual distance. For this, value 2: relative must be set in PS.27.

PS.27: Index mode			
Bit	Meaning	Value	Explanation
1..3	Position setting	2: relative	The value of PS.24 index / position defines the path that still has to be travelled starting at the positive edge of the marker.

After activation of the positioning mode by a digital input, the drive remains in vector controlled operation, until the marker triggers a "start positioning" command. The target position for the positioning is the actual position ru.54 at the time of the positive edge + PS.24 "index/position".

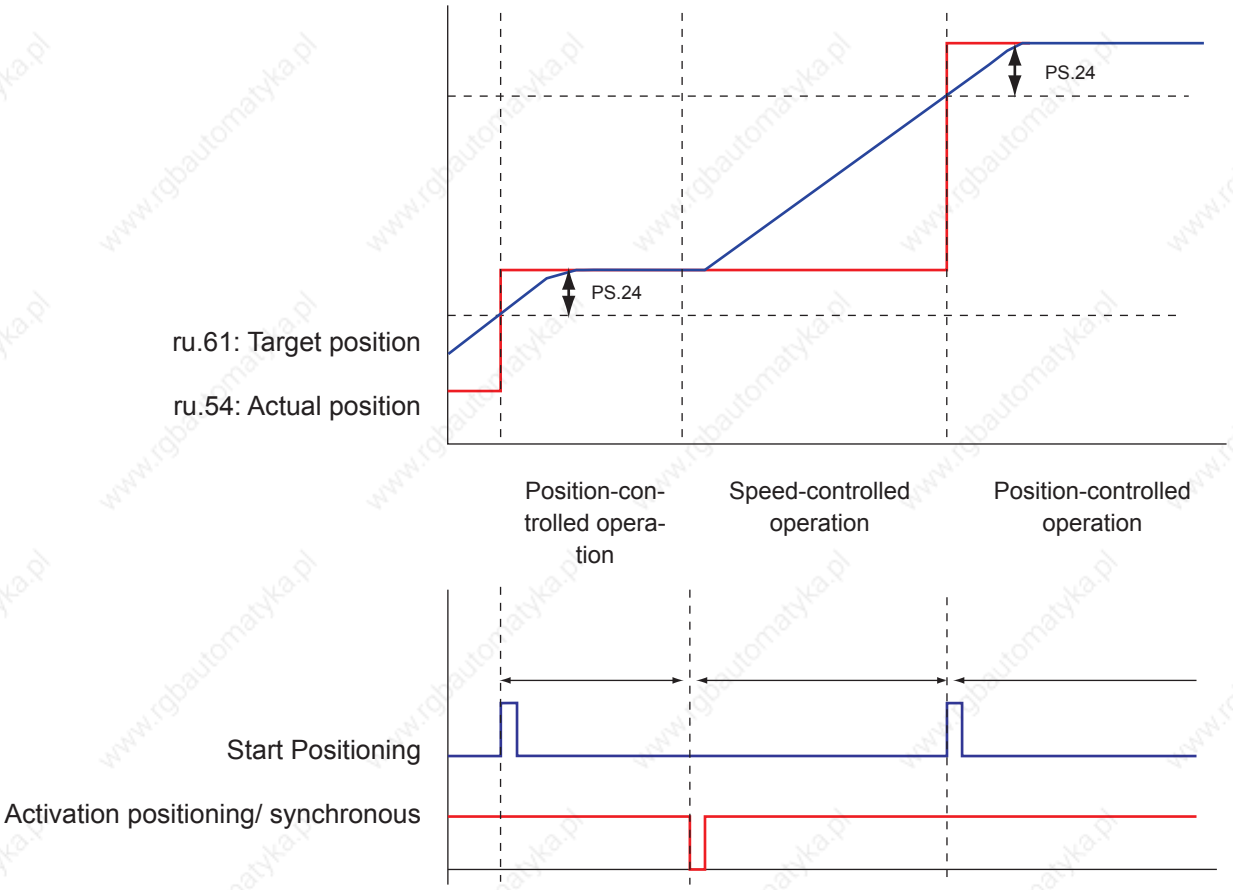

7.12.4.13 Posi mode / flying referencing with correction

During the round table positioning with only one encoder for motor and round table position, a flying referencing for correcting a gear factor error exists. For other applications using only one encoder, one needs compensation for slip (undercarriages) or cable stretch (hoists).

An undercarriage shall, e.g., be moved 1m, corresponding to 10,000 increments. During starting, the powered wheels slip on the steel rail, however, so that after 10,000 increments of encoder revolution, the undercarriage has only travelled 0.95m.
To compensate for this error, the slip-afflicted system can be resynchronised via reference markers. There reference markers indicate the real position of the drive. An adjustment value is calculated from this information. The adjustment is still carried out within one active positioning, to reach the target at the predefined position.
To be able to approach the target from both directions, two reference markers that can be located at different positions must be supported.
Dependent on the direction of rotation, the positive edge of the reference marker is expected at a distance to target of PS.46 "relative adjustment switch clockwise rotation" (direction of rotation clockwise) and PS.47 "relative adjustment switch counter clockwise rotation" (direction of rotation counter clockwise), respectively.

In parameter ru.69 "distance ref.-zero point", the adjustment value is displayed. It is calculated as:

Clockwise rotation: ru.69 = PS.46 - (ru.61: target position - ru.56: set position)
Counter clockwise rotation: ru.69 = (ru.61: target position – ru.56: set position) - PS.47

Example:

Un undercarriageshall drive to the position 5m (= 5.000 increments).
The undercarriage loses 0.2m (= 200 increments) during acceleration due to slip.
The right reference marker is situated at position 4...4.3m => PS.46 = 1m = 1,000.
The left reference marker is suited at position 5,2...5,5m => PS.47 = 0,5m = 500.

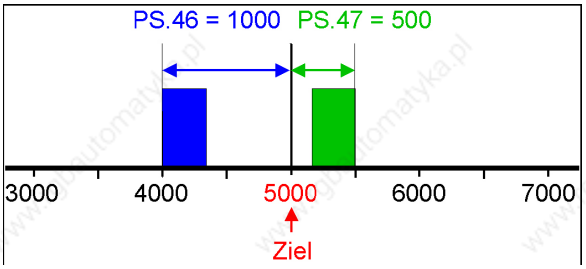

Clockwise rotation: Counter clockwise rotation:

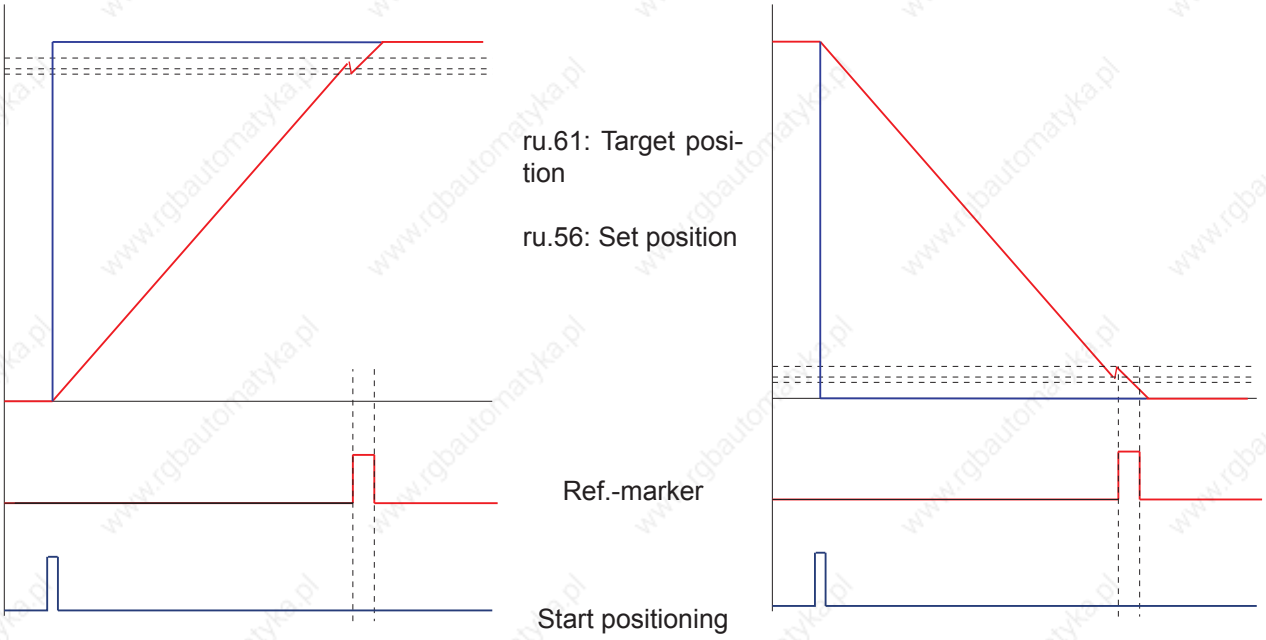

Attention:	**No reference point setting of the actual position takes place. This has the following consequence: If the position controller is not active (PS.06 = 0), or if the drive cannot follow the setpoint position due to torque limits or controller settings, errors in the actual position can add up.**

If the referencing marker is recognized only during the deceleration ramp when reaching the target, the target position cannot be reached with the adjusted ramps anymore.
During the constant running phase, too, the adjustment of the position via the reference markers can lead to the target position not being reachable anymore. This is possible every time the reference marker shows that the drive is already nearer the target than expected.
To be able to directly drive to the target in these cases as well, the ramp times must be changed.
In parameter PS.44 "adjustment ramp limit %", a factor between 25 and 100% can be set. 25% means that the deceleration times may be reduced to maximally 25% and increased by up to a factor of 4. The value 33% in PS.44 would correspondingly allow a change in the deceleration times of between 33% and a factor of 3 of the values set in the oP-parameters.
If the adjustment pulse is received when the drive is already in the deceleration phase, adjustment occurs only during the last S-curve before reaching the target.

If the change of the ramp times by the adjusted adjustment factor PS.44 is insufficient, the drive enters the status "position inaccessible".

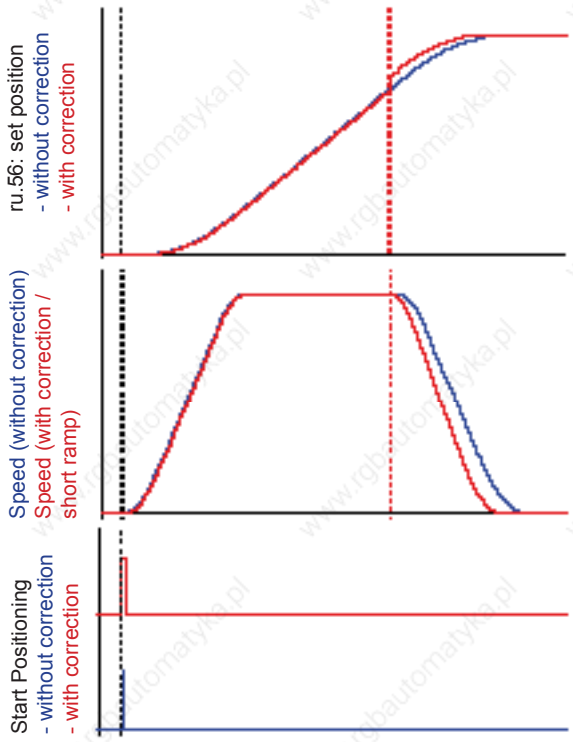

The blue curve shows a positioning where the reference marker does not trigger an adjustment.
For the red curve, it is determined at the reference marker that the drive is closer to the target than expected.
If breaking would occur with the adjusted deceleration times, the target would be overshot.

Via PS.44 = 25% the drive is permitted to decelerate more sharply.
The comparison of the red and the blue speed curve show that the drive accelerates equally in both cases, but decelerates more sharply after the adjustment.
Thereby, the adjustment can be still be carried out during the running positioning and the target position can still be reached.

If no successful adjustment can be executed during the running positioning, there are two different response options which can be selected via PS.00:

PS.00: Posi / synchronous mode			
Bit	Meaning	Value	Explanation
6 / 7	If position not reachable	0: stop	If the target position is inaccessible due to the adjustment, even with the adjusted ramp times, the drive stops and posts the status message "123: position inaccessible". This status can be reset only by deactivation of the positioning module.
		64: stop + new attempt	If the target position is inaccessible due to the adjustment with the precept ramps, the drive completes the original positioning profile and then automatically starts a new positioning to reach the target position.
		128: new attempt	Do not use
		192: reserved	

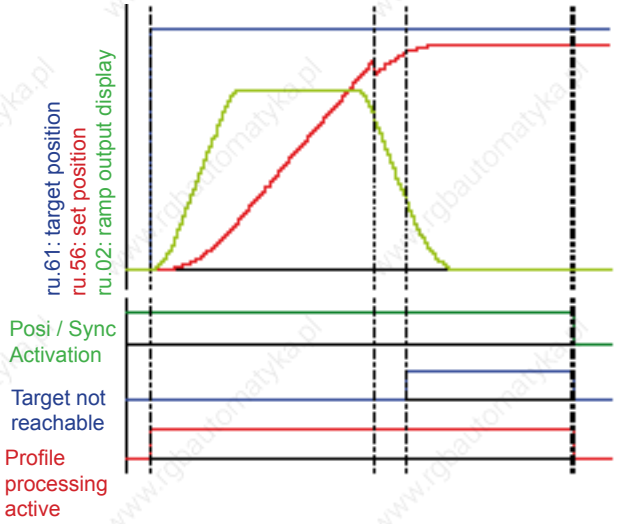

PS.00 / bit 6...7 = 0: Stop

Reference marker recognised during the deceleration phase of the target approach.
Adjustment of the position is executed, but positioning to the target position is not possible anymore.
(S-curve-time too small or adjustment factor for ramps in PS.44 set too small).
With the beginning of the lower S-curve, the drive signals "position inaccessible"via a digital output.
Only with deactivation of the positioning module, the output "target inaccessible" is reset.

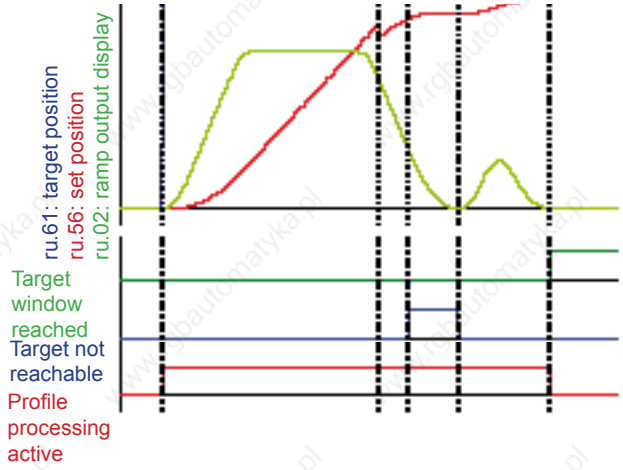

PS.00 / bit 6...7 = 64: Stop + new attempt

Reference marker recognised during the deceleration phase of the target approach.
Adjustment of the position is executed, but positioning to the target position is not possible anymore.
With the beginning of the lower S-curve, the drive signals "position inaccessible"via a digital output
After reaching standstill, the drive automatically starts a new positioning to the target position.
The output "target inaccessible" is reset automatically
The two reference markers belong to the block (index) that defines a positioning step.

The two reference markers belong to the block (index) that defines a positioning step. (For the description of the positioning indexes see chapter 7.12.4.8 "sequential positioning"). In connection with the reference marker, it is useful to define index blocks even for single positionings.

Example:

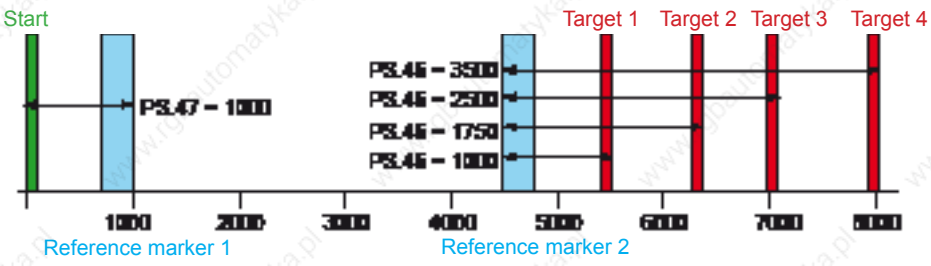

From a starting position, an undercarriage shall drive to 4 different positions . The positions of target 1...4 are always approached from the left, the start always from the right. For the targets, therefore, reference markers are always defined for clockwise rotation, and for the start only a reference marker for counter clockwise rotation. The values for the other reference markers are set to zero (= deactivated)
The profile speed definition is given via parameter PS.31 "max. speed %". That means value „16: PS.31 / PS.25“ must be entered in PS.00 / bit 5 "positioning / target speed".
The drive shall stop at the target, in parameter PS.25 "index / speed", value 0 must be entered for all blocks.

This is a single positioning, PS.26 „index/ next“ must always be set to „-1: PS.28“, since there is no next position. The positions are set as absolute values and "continuation of the profile processing" is deactivated. Parameter PS.27 must therefore be set to the value 0.

This results in the following positioning blocks:

	PS.23	PS.24	PS.25	PS.26	PS.27	PS.46	PS.47
Start	0	0	0	-1:PS.28	0	0: off	1000
Target 1	1	5500	0	-1:PS.28	0	1000	0: off
Target 2	2	6250	0	-1:PS.28	0	1750	0: off
Target 3	3	7000	0	-1:PS.28	0	2500	0: off
Target 4	4	8000	0	-1:PS.28	0	3500	0: off

If the drive shall now travel from the start to target 2, the value 2 must be entered in parameter PS.28 "starting index new profile", and the "start positioning" command must then be given.

In the process, the undercarriage also crosses reference marker 1, which can trigger an adjustment only during the positioning to the starting point. For the drive to target 2, marker 1 must be ignored. For that purpose, the parameter PS.40 "reference point window" is used. Only an initiator pulse within the position window of +/- PS.40 around the programmed value for the reference marker triggers an adjustment.

Example target 2:

PS.46 = 1750 increments / PS.24 = 6250 → the reference marker is expected at 6250 – 1750 = 4500.
If the reference point window is set to, e.g., 300 increments, the initiator signal is accepted only if the drive rotates in clockwise direction of rotation and as long as the actual position ru.54 is in the range of 4200 to 4800 increments.

The size of the reference point window depends on the maximum expected slip. If one assumes, that maximally 150 increments „are lost“ due to the slipping of the wheels (i.e. are not converted to propulsion), a value > 150 increments must be adjusted in PS.40.

If the drive is approaching target 2 from the left, reference marker 1 generates a positive edge at an actual position of 700...850 (depending on the level of slippage) and therefore outside of the permitted window.

This marker is therefore ignored. Reference marker 2 generates its pulse within the reference window and is evaluated for the adjustment.

Example start position:
To drive back to the starting position, value 0 must be entered in parameter PS.28 "starting index new profile" and the "start positioning" command must be given. The drive then travels back to the start with direction of rotation counter clockwise.

PS.47 = 1000 increments / PS.24 = 0 → the reference marker is expected at 0 + 1000 = 1000,
PS.40 "reference point window" = 300 increments

The initiator signal is evaluated only if the direction of rotation is counter clockwise and the actual position lies within a range of700...1300 increments. With this, the reference marker 2 is masked for the return path.
The following figure illustrates the connection between direction of rotation, target, the values of PS.46 / 47 and the reference point window PS.40.

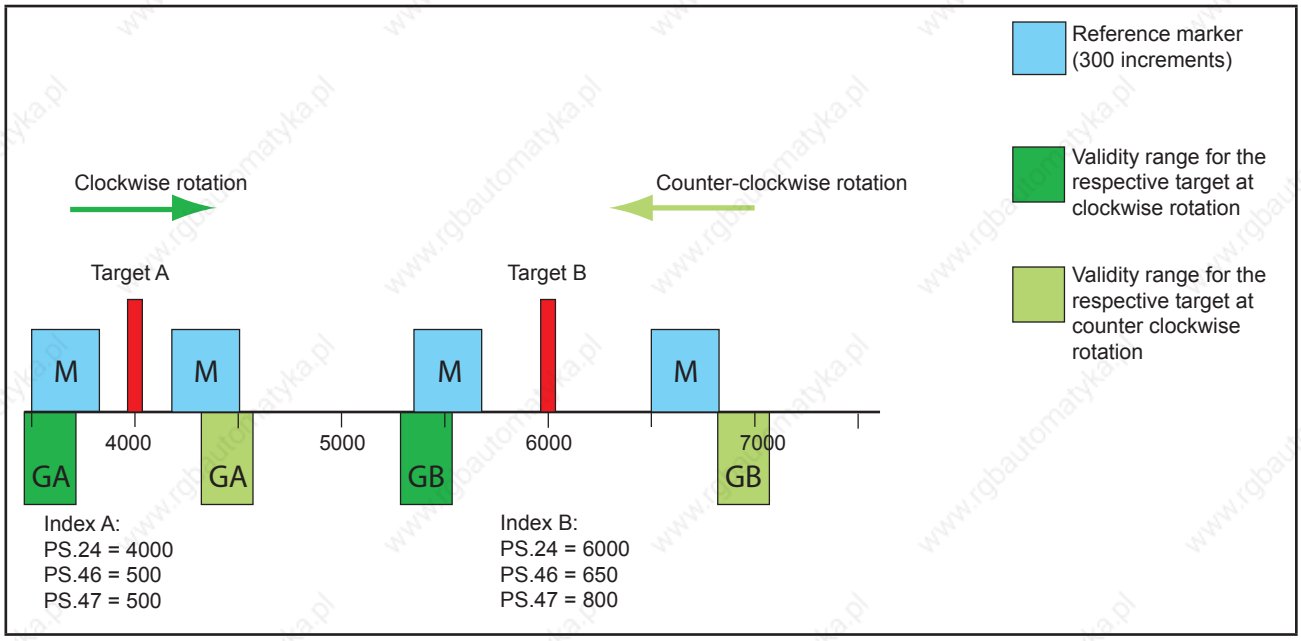

The parameter PS.45 "adjustment index selection" is identical to parameter PS.23 "index/selection". It has been inserted here a second time only to simplify the operation.

7.12.4.14 Posi mode / start positioning

A "start positioning" command can be generated by various means:

- via digital input

  The digital input is selected via parameter PS.29 "start positioning input selection". Alternatively, the function "start positioning" can be associated with an input in the parameters di.11...di.22 (see chapter 7.3 digital inputs)

- by means of the control word Sy.50 or Sy.43

  To start the positioning by means of the control word Sy.43 ("control word long") and Sy.50 ("control word low"), respectively, bit 10 "start positioning" must be switched from 0 to 1.

Sy.43: Control word long, Sy.50: Control word low			
Bit	Meaning	Value	Explanation
10	Start Positio-ning	0	Without function for positioning
		1024	Switch from not activated to activated starts positioning

Starting a new positioning is only possible if bit 10 has temporarily been set to 0.

- by writing a new target position to parameter PS.24 or by set changeover
  To start a positioning by writing a new target position or by set changeover, the following adjustments must be made in PS.00:

PS.00: Posi / synchronous mode			
Bit	Meaning	Value	Explanation
9	Start positioning via set change	0: off	For "start positioning by set change = on", every set change automatically generates a "start positioning" command.
		512: on	
12	Start positioning PS.24	0: off	For "start positioning PS.24 = on", a "start positioning" command is generated each time parameter PS.24 is written to (independent of the index).
		4096: on	

To perform a positioning, the inputs wired as limit switches (inputs with functions "forward" and "backward") must be active. If the hardware limit switches are not to be used, the protection functions in Pn.07 "limit switch error response" must be deactivated (value 6: function switched off).

If the target position can still be changed during a running positioning is determined by PS.00 bit 3.

PS.00: Posi / synchronous mode			
Bit	Meaning	Value	Explanation
3	Termination due to new start positioning	0: off	After starting a positioning, the target position that was valid at the time of the "start positioning" command is approached.
		8: on	For a new „start positioning“ command during the acceleration or constant running phase of a running positioning (status „122: positioning active“) the new target is adopted and approached if it is reachable with the preset acceleration / deceleration / jerk times. (For the processing of inaccessible positions, see chapter 7.12.4.15) For a sequential positioning, the running positioning sequence is aborted. With the new "start positioning" command, a new positioning sequence is started with the index programmed in PS.28 "starting index new profile".

If the drive leaves the vector controlled operation (first "start positioning" after activation of the positioning mode), or if during an active positioning a new "start positioning" command is given, the new target is possibly inaccessible with the adjusted ramp and jolt times.
Parameter ru.84 "accessible relative position" displays the distance that the target must have to the actual position ru.54 at the time of the "start positioning" pulse to be accessible with the programmed ramp and S-curve times.

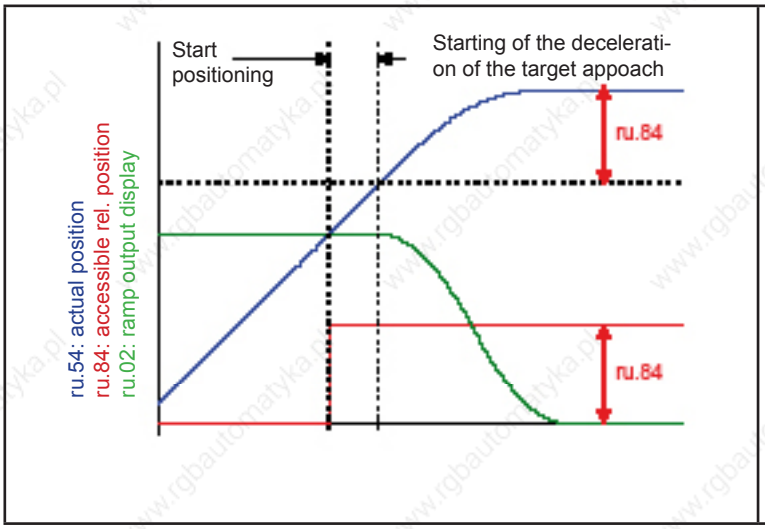

Example:
At the "start positioning command", ru.84 indicates that the target must be at least 200000 increments away from the current actual position to be accessible with the programmed ramps.

The target is further away and the drive positions to the target.
The deceleration phase starts when the amount of ru.84 ahead of the target is reached.

If the target is inaccessible with the ramps from the oP-parameters, the ramp times can be changes online in the event of a new "start positioning" pulse. For that purpose, there is the parameter PS.32 "maximum decrease of ramp %".

Note: For the case of a start from the vector controlled operation, the online adaption is not active. In parameter PS.32, a factor between 25 and 100% can be set. 25% means that the ramp and S-curve times may be reduced to maximally 25% and increased by up to a factor of 4. The value 33% in PS.32 would correspondingly allow a change of between 33% and a factor of 3 of the values set in the OP-parameters.

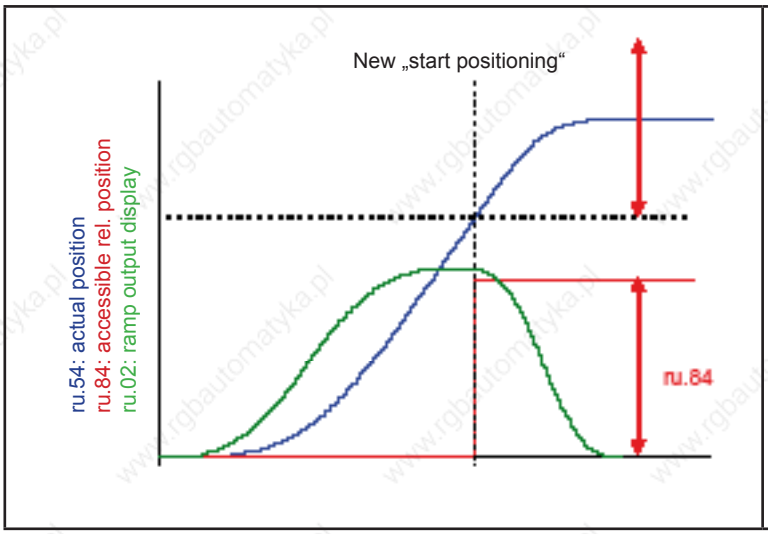

ru.54 "Actual position" + ru.84 "accessible rel. position" is greater than the target.
I.e., the target would be inaccessible without ramp decrease.
In this example, the same values are set for the deceleration ramps as for the acceleration ramp.

The ramp times are reduced by PS.32, so the target is accessible in a shorter distance than ru.84.

The new "start positioning" command must occur within the positioning, in the acceleration or constant running phase. In the deceleration phase to the final target approach, the new starting pulse leads to the status "position inaccessible".
If the new starting pulse is received in the correct phase, but the target is inaccessible despite ramp adjustment , the drive enters the state "position inaccessible" with the default ramp/jolt times.
The parameter PS.32 is similar to the parameter PS.44 "limit adjustment ramp %" in its mode of action. PS.44, however, works only for ramp changes necessitated by flying referencing with adjustment. PS.32, on the other hand, is responsible for adjustments based on new target settings.
Furthermore, the ramp can also be changed during the acceleration phase by PS.32 if the new target setting makes it necessary.
With the parameter PS.53 "maximum termination distance", unwanted "start positioning" commands can be

masked.
Since the last "start positioning" command, the drive must have travelled a greater distance than PS.53 so that a new starting command is accepted during a running positioning.

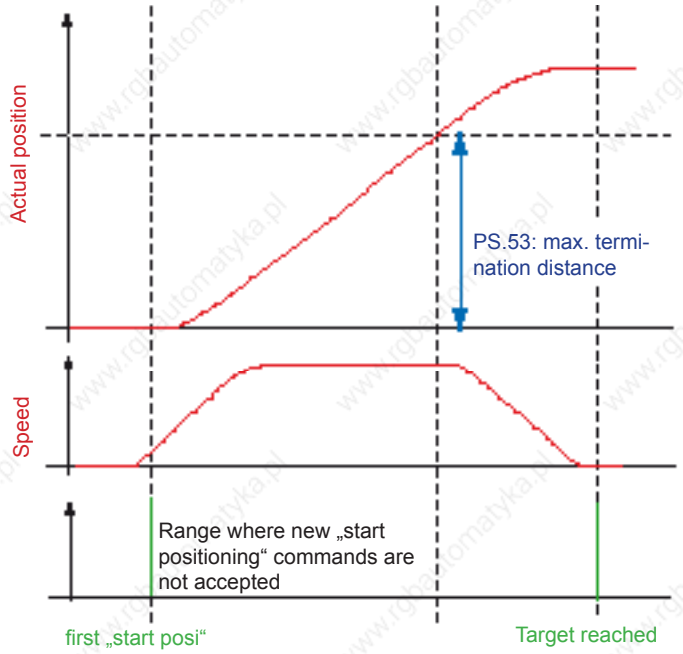

Example:
At the "start positioning command", ru.84 indicates that the target must be at least 200000 increments away from the current actual position to be accessible with the programmed ramps.

The target is far away and the drive positions to the target.
The deceleration phase starts, if the amount of ru.84 ahead of the target is reached.

7.12.4.15 Posi mode / not reachable positions

An "inaccessible position" is a target position that cannot be reached with the programmed acceleration / deceleration and jolt times.

This can occur in the following circumstances:

- Transition from vector controlled to position controlled operation due to the first "start positioning" after activation of the positioning mode
- Change of the target position during a running positioning by a new "start positioning" signal
- during sequential positioning, when no stop is scheduled at the target
- due to a change in the actual and set point positions by flying referencing with adjustment
- if the drive is running at the time of the "start positioning" command and a rotation change is required for the positioning

I.e., every time the drive is running at the time of the "start positioning" command, inaccessible positions can occur.
Also, if a new "start positioning" pulse is given during the deceleration phase to the original target, and the S-curves are switched off, the message "inaccessible position" is generated because an adjustment during the final approach to target is only executed during the lower S-curve.

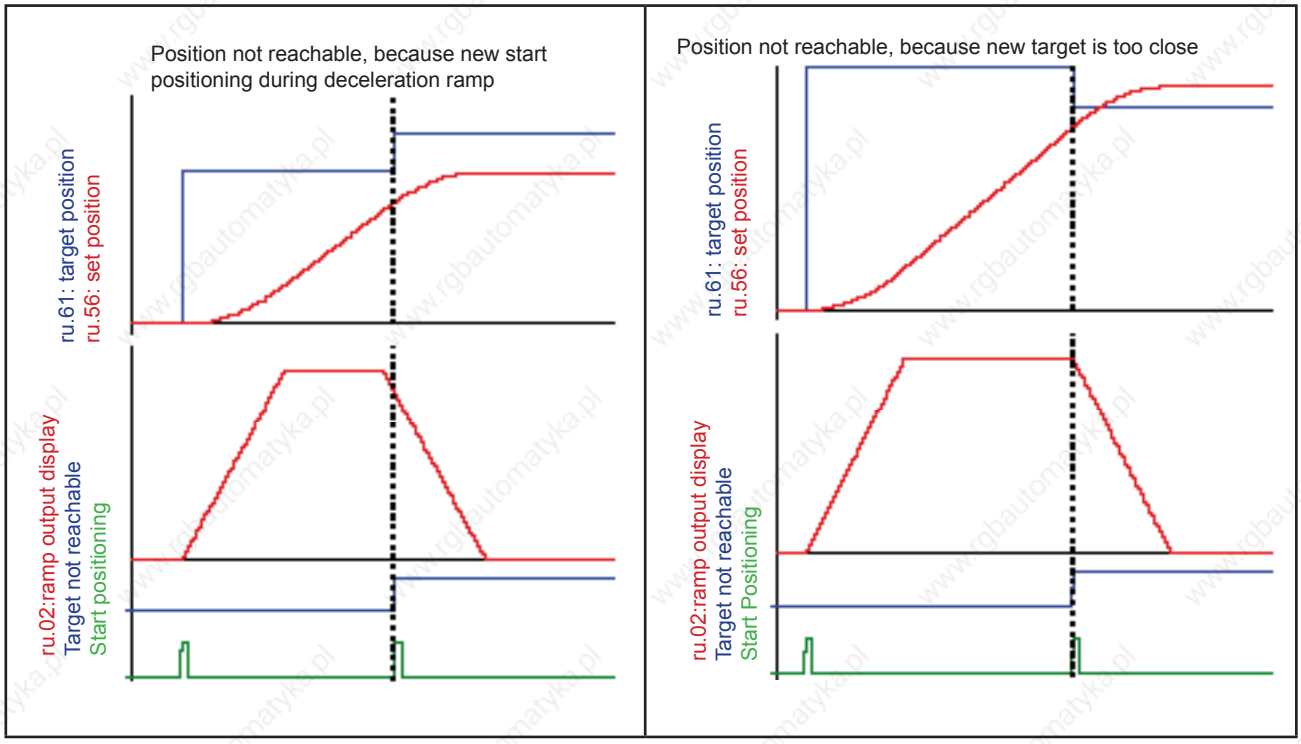

The response to this status is selectable via PS.00:

PS.00: Posi / synchronous mode			
Bit	Meaning	Value	Explanation
6 / 7	If position not reachable	0: stop	The drive stops with the adjusted ramps. Status ru.00 displays „123: position not reachable“. This status is reset only by deactivation of the positioning module. While this status is active, no new "start positioning" commands are accepted.
		64: stop + new attempt	The drive stops with the adjusted ramps. Status ru.00 displays „123: position not reachable“ during the deceleration ramp. After reaching standstill, a new positioning to the target position starts automatically (status changes to "122: positioning active").
		128: new attempt	This function is required only for sequential positioning: The target positions of the individual positioning steps are traversed, even if the target speed set in PS.25 cannot be reached. This permits checking where the positioning sequence has to be changed or adjusted so that target position and target speed can be reached. This should facilitate the parametrisation of the index speeds / positions.
		192: reserved	reserved
8	Ignore position, if not reachable	0: off	The behaviour of the drive is determined by PS.00 bit 6 / 7 (explanation see above)
		256: on	If the new target is inaccessible, the "start positioning" command is ignored. With a digital output, the ignoring of the position can be displayed. The positioning module remains active, new "start positioning" commands are executed. The digital output can be reset only by deactivation of the positioning module.

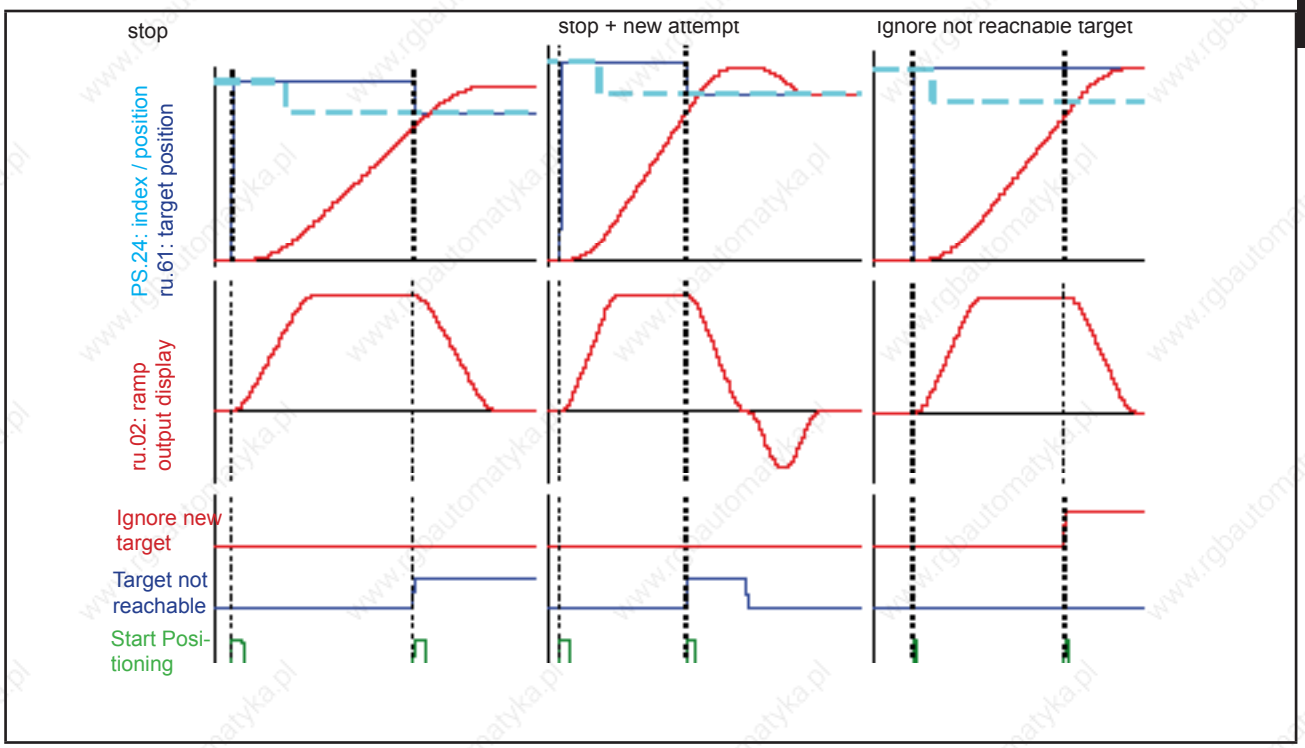

7.12.4.16 Posi mode / stop positioning

A deactivation of the input occupied with the function "positioning /synchronous activation" concludes the positioning mode. A running positioning that was aborted by the deactivation cannot be resumed after switching the input back on.
If the input remains activated, an active positioning can be interrupted by quick stopping, deactivation of the control release, triggering of the „power off“ function or occurence of an error (e.g.: E.OC, E.OP, etc.).
After the drive is "ready for positioning" again, an interrupted positioning must be restarted with a "start positioning" command.

With parameter PS.00, one can select how the drive should behave after an error occurs (i.e., after interruption of an active positioning):

PS.00: Posi / synchronous mode			
Bit	Meaning	Value	Explanation
5	Behaviour after error	0: Starting index from PS.28	The target position (PS.24) from the starting index block is approached with the first "start positioning" after the interruption.
		32: last target position	The target position that was positioned to when the interruption occurred will be approached with the first "start positioning".

Note: a sequential positioning is aborted only if the error (the interruption) occurred during an active positioning. If the drive is stopped at the target (even if it is only an intermediate target of the sequential positioning), switching off the control release, for example, does not lead to a termination of the sequential positioning.
An active positioning can also be interrupted by setting bit 11 in control word SY.43 or SY.50 (field 2048: „activate interruption“).

In contrast to a termination due to abnormal stopping, the ramps from the OP-parameters are used and started S-curves are not interrupted in a termination initiated by the control word. The modulation remains on.

If bit 11 "termination" has again been deactivated in the control word, there are two possibililties for the drive to continue:

PS.52: Automatically execution positioning after STOP	
Value	Explanation
0: off	The drive waits for a new "start positioning" command. The current position setpoint PS.24 is inherited for the new positioning.
1: on	The drive automatically starts a new positioning on the target that was approached at the time of the termination by the control word. A change of the position setpoint PS.24 while the "termination"-bit is set is ignored.

7.12.4.17 Analog position setting

By means of the analog parameter setting, the parameter PS.24 "index / position" can also be adjusted. (For more detailed information on the analog parameter setting, see chapter 7.15.9 and for the adaption of the analog channels, see chapter 7.15).
To set a position setpoint in PS.24 "index / position" by analog input, the following adjustments have to be made:

- in PS.23, select the index that is to receive the position setpoint
- select PS.24 as the target for the analog parameter setting An.54: Analog parameter setting / target = 1318h (bus address PS.24)
- In An.53, select which analog channel is to provide the position setpoint
- Parametrise the analog channel (filter, amplification, offset, etc.)
- Configure the conversion of the analog value in the parameter value for PS.24:
  An.55: Analog parameter setting offset defines the parameter value at analog setting 0%
  An.56: Analog parameter setting max. value defines the parameter value at analog setting 100%

  Parameter value PS.24 = An.55 + (An.56 – An.55) x analog value

  Example: an analog value of -100%..+100% shall permit setting position values of 100000 to 300000 increments. An.55 and An.56 must then be parametrised as follows: An.55 = 200000 An.56 = 300000

7.12.4.18 Analog position output

Via the analog outputs ANOUT, position values can also be issued. (For further information on adaption of the analog outputs, see chapter 7.15).

For the analog setting of actual position (ru.54) or set point position (ru.56), the following adjustments must be made:

- for an analog output (ANOUT1 or 2), choose actual position (An.31 / An.36 = 27) or setpoint position (An.31/ An.36 = 28) as the output value
- configure the conversion of the position value to an analog value:
  Position for which 0% analog value is issued: PS.41 "Reference position 0%"
  Position for which 100% analog value is issued: PS.42 "Reference position 100%"
  Example: for position values in the range of 100.000 to 300.000 increments, an analog value of -100% to 100% is to be issued. PS.41 and PS.42 must then be parametrised as follows: PS.41 = 200.000, PS.42 = 300.000
- Parametrise analog output (amplification, offset)

7.12.4.19 Target window

In parameter PS.30 "target window", the target window range is given. The target window has been reached if the actual position is in the range of +/- PS.30 / 2 around the target position.

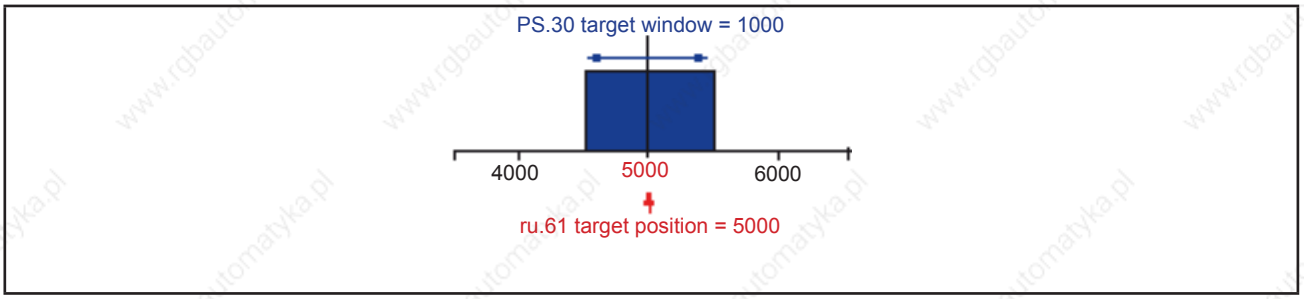

7.12.4.20 Position scan

With parameter PS.37 "position scan input selection", or via the digital Input function (di.24...di.35) "scan position", an input can be defined for scanning the actual position (ru.54) with the positive edge.
The position scan happens only in status "positioning active". The scanned actual position value (ru.54) is displayed in parameter ru.71 "teach/ scan position display". Each further edge overwrites the old scan position.
Dependent on the scanned position, a digital output can be set. Switching condition „75: amount actual position-scan position > level“ must be selected for this.

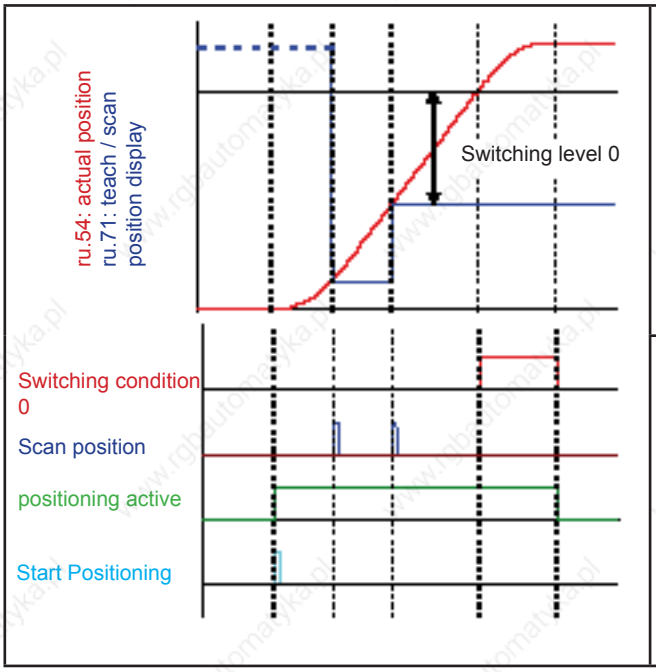

The output function "switching condition 0" is reset by:

- Setting of a new target position
- Reaching of the target position
- The target position is not reachable
- Quitting the positioning mode

Note:
As long as the switching condition remains set, the teach-function (see chapter 7.12.4.21) cannot be used.

7.12.4.21 Teach function

With parameter PS.37 "teach index input selection", or via the digital Input function (di.24...di.35) "store position (teach)", an input can be defined for scanning the actual position (ru.54) with the positive edge.
The scanned value is displayed in parameter ru.71 "teach / scan position display" and stored in PS.24 as the target position. Parameter PS.35 "teaching mode" determines which positioning block (which index) the target position is stored in.

PS.35: Teach mode	
Value	Explanation
0: Write index PS.23	The actual position is written to the positioning block pointed to by parameter PS.23 „index / selection“.
1: Write index PS.23 incr.	The current position is written to the positioning block pointed to by parameter PS.23 "index/selection" and subsequently, PS.23 is increased by 1 (limited to maximum index 31).
2: Write index PS.28	The current position is written to the positioning block pointed to by parameter PS.28 "starting index new profile". Since PS.28 is set-programmable, positions can be linked with sets this way.

Example: Teaching of target position

An undercarriage shall "learn" the position values belonging to a storage location (the position value shall be taught). In inching mode, the drive is brought to the position that is to be used later as the target of the positioning (i.e., the storage location on a shelf). The drive is in vector controlled mode, i.e., the input activating the positioning mode is not set.

Since several storage locations are to be taught consecutively, the setting is PS.35 "teaching mode" = 1. If the correct position is reached, it is registered as the target position by the teach-pulse. After that, the next storage location is approached.

The following figure illustrates the example:

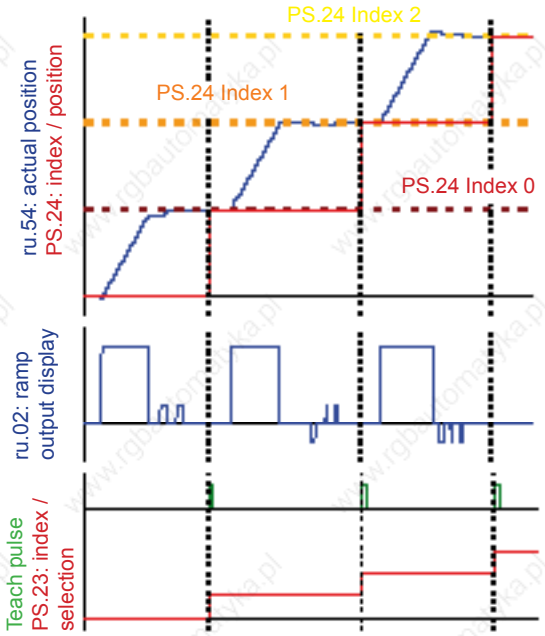

With the digital inputs, 3 constants are selected:

- higher speed for coarse target approach constant 1 = 300 rpm
- inching mode for exact target approach
  Fixed value 2 = 50 rpm
  Fixed value 3 = -50 rpm

The desired position is approached in vector controlled operation.
With a teach-pulse (positive edge of the chosen digital input), the current actual position is registered as the target position of a positioning block.

The process starts with the index currently selected in PS.23. Thereafter, the index is increased after every target position acquisition.

7.12.4.22 Functions and displays for the positioning mode

This chapter provides a compressed summary of the possibililties for control and visualisation of the positioning mode. Some of the parameters and functions are described in more detail in the corresponding chapters.

Input functions (di.11...di.22)		
No.	Name	Function
24	Activation positioning/ synchronous	Activation of the positioning mode
29	Start positioning	Start of the positioning
Input "+" functions (di.24...di.35)		
2	Store position (teach)	Positive edge stores an actual position as the target position in PS.24
3	Scan position	Positive edge stores the actual position in parameter ru.71. Can be used for visualisation and generation of digital output signals.
4	Relative position F/R	Rotation setting for relative positioning (if selected in PS.27)
7	Reference point correction	For connecting an adjustment sensor for flying referencing with adjustment.

Display parameters		
Parameter		Function
ru.54	Actual position	Display of the actual position (calculated from the position information of the encoder interface, selected in PS.01).
ru.56	Set position	The position that the drive is supposed to have reached currently, according to the calculated profile (in contrast to ru.61 "target position", to be reached at the end of the positioning).
ru.58	Angle difference	Difference between set and actual position.
ru.60	Act. position index	Number of the positioning block currently being processed.
ru.61	Target position	The target which the drive should reach at the end of the positioning.
ru.63	Profile speed	Maximum value of the speed profile the inverter calculates for optimal target approach.
ru.69	Distance ref.-zeropoint	The value by which the actual position is adjusted during the "flying referencing with adjustment".
ru.71	Teach / scan position	Position value scanned by a digital input (used for digital output and teaching).
ru.84	Accessible rel. position	If the drive rotates at the time of the "start positioning" command (vector controlled operation or new pulse during a running positioning), this parameter shows what distance to the actual position the target must be to be reachable with the programmed ramp and S-curve times. The ramp adjustment (PS.32) is not considered (see chapter 7.12.4.13 "start positioning").

Output switching conditions (do.00...do.07)		
39	Angle difference > level	Angle difference ru.58 > comparison level (LE.00...LE.07)
54	Target window reached	The position profile is completed (ru.56 = ru.61) and the drive is in the range of +/- PS.30 / 2 (target window) around the target position ru.61. Is also set if the drive is stopped at an intermediate target during the sequential (index) positioning.
55	Current position > level	Actual position ru.54 > comparison level (LE.00...LE.07)
56	positioning active	Positioning is active, but the set position ru.56 has not yet reached the target position ru.61. The output is deactivated as soon as the calculated position profile reaches the target position, even if the drive has not stopped in the target window yet. For the sequential positioning, the output is deactivated if the drive has stopped at the target of a positioning block.
57	position not reachable	The position is inaccessible from the current speed in compliance with the adjusted deceleration and S-curve times, or a new "start positioning" command was given during the deceleration ramp (see chapter 7.12.4.14 "inaccessible positions"). PS.00 determines the behaviour of the drive.
58	Profile processing active	This output switching condition is needed for the follow-up positioning. The output is set with "start positioning". If the drive has reached the target position of a positioning step, the output remains set (in contrast to Nr. 56). Only when the set point position (ru.56) reaches the position of the last block (PS.24), the output is deactivated again. Value „ -1: PS.28“ must be entered in parameter PS.26 „index / next in the last block.
67	Distance > level	Distance since the last "start positioning" command is longer than the switching level.
68	Position to the target window > level	Distance still to be travelled until reaching the target window is longer than the switching level.
72	Actual position index = level	For sequential positioning: the actual position index is equal to the switching level (scaling factor: values of 0.51...1.5 count as index 1 etc.).
75	Amount act. position – scan position > level	Actual position (ru.54) - teach/scan position (ru.71) > comparison level (LE.00...LE.07)
77	Actual Position = position index PS.28	The output is set if the switching condition "target window reached" is met (see Nr. 54) and the "current position index" (ru.60) is equal to the "starting index new profile" (PS.28).
78	Rotary table reference invalid	Only an initiator pulse within the position window of +/- PS.40 around the reference point PS.17 may trigger an adjustment. If a pulse is received outside of this window, it is interpreted as an interference pulse and is ignored. With this output switching condition, the user can recognize the presence of invalid pulses.
79	Ignore position not reachable	The output is set if a "start positioning" command is ignored because the new target position is "inaccessible" (see chapter 7.12.4.14 "inaccessible positions"). The output is reset by a new "start positioning" command or by deactivation of the positioning mode.

The switching level for the switching conditions are set in LE.00...LE.07. Since the switching level can be used for very different quantities (current, voltage, speed, position, etc.), they have the following scaling factors for comparisons with position values:
LE.00...LE.07 = 1,00 → comparison level is 100 increments

Inverter state (ru.00)		
No	Name	Function
121	Ready for positioning	Display of activation of the positioning mode (input "posi/sync activation" active and positioning mode selected in PS.00). Whether the position controller is already active (i.e., whether the first "start positioning" command has been given), or whether the drive is still in vector controlled operation, is not indicated by this display. Missing limit switch signals also do not affect the status display.
122	positioning active	Positioning profile (position / speed profile) is being calculated. The set point position ru.56 has not reached the target position ru.61 yet.
123	position not reachable	The position is inaccessible from the current speed under the restrictions of the adjusted deceleration and S-curve times or a new "start positioning" command was sent during the deceleration ramp.

7.12.5 Contouring control mode

7.12.5.1 Contouring control mode / premises

For the contouring control mode, the bus-synchronous operation must be activated. Bus-synchronous operation means that a control sends telegrams in a constant time pattern and that all connected inverters synchronise to this pattern. This allows angular-synchronous and multi-axis operation, respectively.
To implement the bus-synchronous operation, one requires either a fast fieldbus system with the associated KEB-operator or a fast control supporting the HSP5-protocol (e.g., a drive control COMBICONTROL C5).
The following bus systems are supported: CAN, SERCOS, EtherCAT, Powerlink, HSP5.

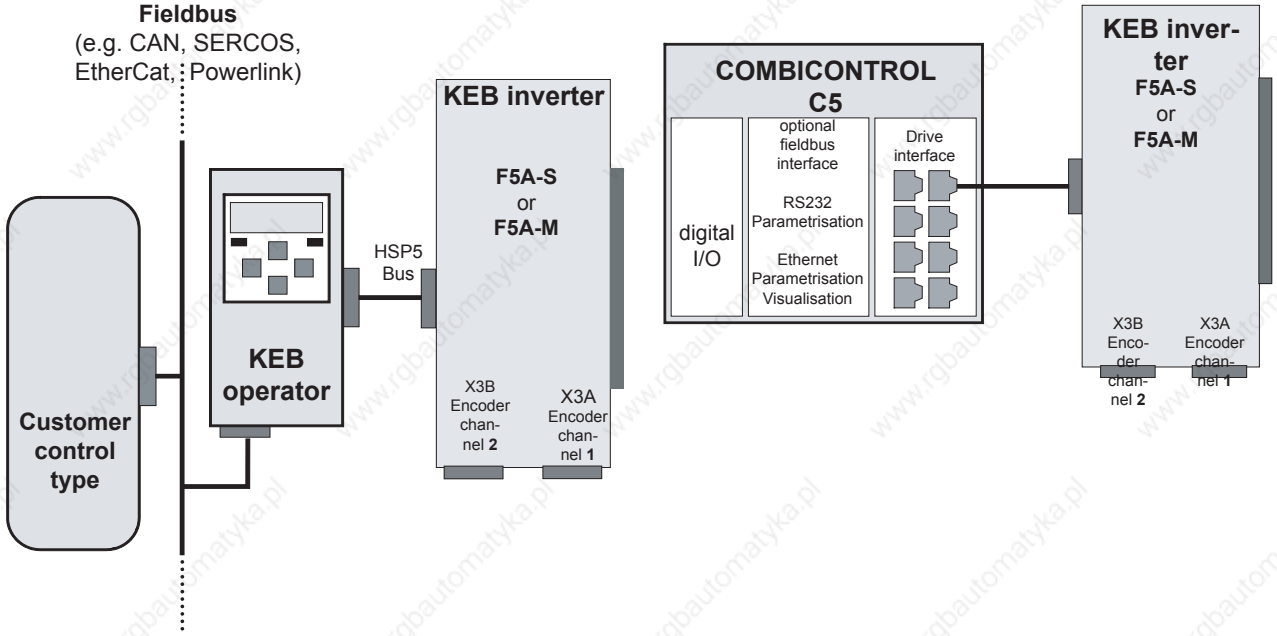

How the bus-synchronous operation is realised and initialised depends on the fieldbus system used and must be looked up in the instructions for the corresponding operator (CAN-operator, SERCOS operator, etc.). The inverter enters the mode "bus-synchronous operation" if a value unequal to zero is set in parameter Sy.08 "bus synchronisation time" .

Note: As soon as the control sends cyclic telegrams in the pattern set in Sy.08, the bit 9 "HSP5 bus synchronous" is set in the status word (Sy.51). The synchronous communication can be monitored with this bit. The control release may only be given if the assembly of the bus-synchronous operation is completed.

7.12.5.2 Contouring control mode / settings

All parameters can be specified in bus-synchronous operation. Typically, however, this operating mode is used for the contouring control mode. The activation of this mode is done in parameter PS.00 or via the control word.

PS.00: Posi / synchronous mode			
Bit	Meaning	Value	Explanation
0...2	Posi / synchronous mode	0...5	Without function for contouring control
		6: Contouring control	Selection of operating mode contouring control
		7: Via control word	The operating modes are selected via the control word (Sy.43 or Sy.50).

Sy.50: control word (low) / Sy.43: control word (long)			
Bit	Meaning	Value	Explanation
12 / 13	Operating mode	0: off	
		4096: Synchronous running	Selection of operating mode synchronous running
		8192: Positioning	Selection of operating mode positioning
		12288: Contouring control	Selection of operating mode contouring control

To activate the contouring control mode, the digital input occupied with the function "positioning / synchronous" must be set.

In contouring control mode, the drive is positioned via the setting of a position setpoint value in the bus-synchronous grid. The control, therefore, does not give the final target position but the set point position for each individual cycle.
The inverter calculates the speed required to reach the position setpoint in one bus cycle. The setting of the position setpoint can be done via PS.24 "index / position" or via PS.34 "contouring mode setpoint".
PS.33 "contouring mode setpoint source" determines which parameter provides the setpoint position.

PS.33: Source contouring mode position			
Bit	Meaning	Value	Explanation
0	Source position setting	0: PS.34	The position is adopted as set position by writing on PS.34. The value is adopted as set position by writing on PS.24.
		1: PS.34, 24	
1, 2	Source speed setting	0: calculated	Parameter „set speed value“ (SY.52) has 1 rpm in all resolution modes. Parameter „reference setting“oP.03 is used in order to select a high resolution.
		2: SY.52	
		4: oP.03	

7.12.5.3 Contouring control mode / write / read data

For the bus-synchronous operation, the read and write data that are to be transmitted with each bus cycle must be defined. In the parameters Sy.24, Sy.26 and Sy.28, the bus addresses of the parameters that are to be provided bus-synchronously by the customer control must be set. Only 3 parameters (one 32 bit parameter and two 16 bit parameters) can be selected.
For the contouring control mode, the setpoint position (32 bit parameter) must always be set bus-synchronously. To that end, the bus address of PS.34 (=1322h or 4898) or of PS.24 (= 1318h or 4888) must be entered in

SY.24 "write data 1 definition" (dependent on setting of PS.33).
The second parameter is typically occupied with the control word SY.50 to allow driving the inverter as completely as possible via the bus.
Parameter SY.43 "control word (long)" cannot be utilised because only a 16 bit parameter may be used. As a third parameter, oP.03 "digital setpoint setting" can be used in case switching from contouring control mode to vector controlled operation is to be possible.

SY.24 write data 1 definition = 1318h or = 1322h
SY.26 write data 2 definition = 32h
SY.28 write data 3 definition = 303h
In the parameters SY.16, SY.18 and SY.20, the bus addresses of the parameters that are to be read bus-synchronously from the customer control must be set.
Again, 3 parameters (one 32 bit parameter and two 16 bit parameters) can be selected.Which parameters are to be read depends on the application. Typically, however, ru.54 "actual position" (32 bit parameter) and SY.51 "status word (low)" (16 bit parameter) are always read.
SY.16 read data 1 definition = 236h
SY.18 read data 2 definition = 33h

7.12.5.4 Contouring control mode / speed precontrol

With activation of the countouring module, the current position value (ru.54) must be read once and then be transmitted three times as the setpoint. This is necessary to initialise the drive-internal speed pilot control.
The same setpoint must also be transmitted three times to stop the drive, e.g., before ending the bus-synchronous operation. This sets the speed pilot control to zero.

When setting the position setpoints, one must ensure that the drive will be able to follow them with the maximum permissible speed. Only oP.14 "absolute maximum setpoint clockwise rotation" and oP.15 "absolute maximum setpoint counter clockwise rotation" function as speed limits.

7.12.5.5 Contouring control mode / watchdog

A breakdown of the bus system is particularly critical during bus-synchronous operation. Therefore, bus monitoring should always be activated. To that end, a value unequal to 6 must be programmed in parameter Pn.05 "watchdog response" .
In Sy.09 "HSP5 watchdog time", the monitoring time for the HSP5 connection between inverter and operator can be adjusted. The value "0:off" means that the watchdog is not active. The monitoring time of the fieldbus connection is parametrized in Pn.06 "watchdog time". The actual monitoring of the fieldbus is carried out by the operator. With the parameter Pn.05 "watchdog response", one selects how the drive responds (e.g., immediate error message or quick stop) to the occurence of a bus breakdown (HSP5 or fieldbus).

7.12.5.6 Contouring control mode / example

The drive shall meet the following requirements:

- Position specification via PS.34
- Speed setting via oP.03 if "0: off" is entered in "operating mode" (bit 12/ 13) of Sy.50 "control word (low)".
- Activation of the contouring mode via control word
- bus synchronisation time 1000 µs

Parameter list:

Para.	Name	Value	Notice
General setting			
cs.00	Controller configuration	4: Speed control	Speed-controlled operation
cs.01	Actual value source	0: Channel 1	Speed feedback channel 1
oP.00	reference source	2: digital absolute (op.3)	speed setpoint setting via oP.03
oP.01	Rotation direction source	7: only setpoint sign	Direction of rotation from the setpoint sign, if the contouring control mode is not activated
Settings for the position control in contouring control mode			
PS.00	Posi / synchronous mode	7: Via control word	Activation of the contouring mode via the control word (SY.50) Attention: If the contouring mode is not activated in the control word, the position value from encoder channel 1 is displayed in ru.54 "actual position". Thereby, the software limit switch function, e.g., is not useable
PS.01	Master source	1: Channel 2	Position feedback channel 2
PS.02	Posi/synch input selection	1:ST	If the contouring mode is selected in the control word, it is also immediately active
PS.06	KP pos/syn	100	Kp value for the position controller
PS14	Mode of position ref.	128	The acquired position is valid (absolute encoder/ no approach to reference point necessary)
PS33	Source contouring mode position	0:PS.34	Position setpoint in the contouring control mode is set via PS.34
Bus monitoring			
SY.09	HSP5 watchdog time	0,01 (10ms)	smallest adjustable monitoring time
Pn.06	Watchdog time	0,01 (10ms)	smallest adjustable time for field bus monitoring
Pn.05	Watchdog response	1	Quick stop/ modulation off/ no auto restart
Parametrisation of the bus-synchronous operation			
SY.16	Proc. read data 1 definition	0236h	read ru.54 "Actual position"
SY.17	Proc. read data 1 set	1	Value immaterial since parameter is not set-programmable
SY.18	Proc. read data 2 definition	0033h	read SY.51 "status word (low)"
SY.19	Proc. read data 2 set	1	Value immaterial since parameter is not set-programmable
SY.20	Proc. read data 3 definition	-1: off	
SY.21	Proc. read data 3 set	1	No third read parameter defined

Para.	Name	Value	Notice
SY.24	Proc. write data 1 defin.	1322h	write PS.34 "Contouring mode position"
SY.25	Proc. write data 1 set	255	Value immaterial since parameter is not set-programmable
SY.26	Proc. write data 2 defin.	0303h	write oP.03 "reference setting"
SY.27	Proc. write data 2 set	255	The value of oP.03 is adopted in all sets
SY.28	Proc. write data 3 defin.	0032h	write SY.50 "control word (low)"
SY.29	Proc. write data 3 set	255	Value immaterial since parameter is not set-programmable
SY.08	Bus synchronisation time	1000 us	Is written via the customer control or the COMBICONTROL C5

7.12.6 Position controller

The position controller is constructed as P controller. The increments per revolution of the encoder and the resolution of the speed is considered in the controller. When swapping the encoder (e.g., from 1024 => 2500 increments) or changing the speed range (e.g., from the 4000 to the 8000 speed mode by changing the parameter ud.02 "control type"), the speed controller setting can be applied.

The Kp of the position controller can be changed speed-dependently. Thereby, one can, e.g., choose a very hard setting for the load transfer and the approach to the final position. For the remaining positioning,
the Kp is lowered then to achieve smooth running of the drive and to dampen the effects of mechanical disturbances (like e.g. seams in guide rails or similar).

The base value of the controller is set in PS.06 "KP for positioning / synchronous". Parameter PS.08 "limit speed for PS.07" determines up to which speed the lowering is to be implemented, and parameter PS.07 "KP lowering at limit speed" determines the percentage value the Kp shall still have in relation to its base value at the speed PS.08.

The following figure illustrates this structure:

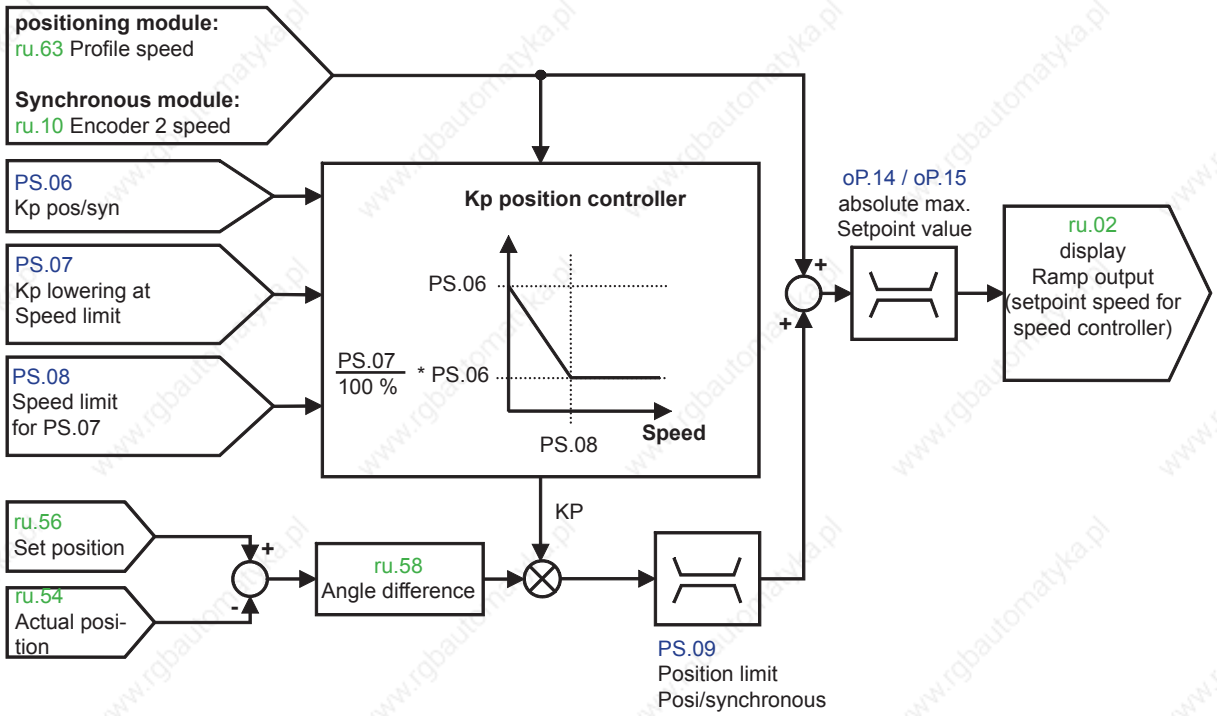

1. Introduction	7.1 Operating and appliance data
2. Summary	7.2 Analog in- and outputs I
3. Hardware	7.3 Digital in- and outputs
4. Operation	7.4 Setpoint-, rotation- and ramp adjustment
5. Selection of Operating Mode	7.5 Motor data and controller adjustments of the asynchronous motor
6. Initial Start-up	7.6 Motor data and controller adjustments of the synchronous motor
7. Functions	7.7 Speed control
8. Error Assistance	7.8 Torque display and -limiting
9. Project Design	7.9 Torque control
10. Networks	7.10 Current control, -limiting and switching frequencies
11. Parameter Overview	7.11 Speed measurement
12. Annex	7.12 Positioning and synchronous control
	7.13 Protective functions
	7.14 Parameter sets
	7.15 Special functions
	7.16 CP-Parameter definition

7.13.1 Error and warning messages ..... 7.13 - 3
7.13.1.1 Undervoltage ..... 7.13 - 3
7.13.1.2 Overvoltage ..... 7.13 - 4
7.13.1.3 Overcurrent ..... 7.13 - 4
7.13.1.4 Overload ..... 7.13 - 4
7.13.1.5 Inverter over temperature ..... 7.13 - 5
7.13.1.6 External fault ..... 7.13 - 5
7.13.1.7 Bus error ..... 7.13 - 5
7.13.1.8 Limit switch error ..... 7.13 - 6
7.13.1.9 Motor protection with temperature sensor ..... 7.13 - 7
7.13.1.10 Software motor protection ..... 7.13 - 7
7.13.1.11 Set selection error ..... 7.13 - 7
7.13.1.12 Encoder interface / encoder error ..... 7.13 - 8
7.13.1.13 Speed limit exceeded ..... 7.13 - 8
7.13.1.14 Speed controller limit reached ..... 7.13 - 9
7.13.1.15 Maximum acceleration exceeded ..... 7.13 - 9
7.13.1.16 General power circuit error ..... 7.13 - 9

7.13.2 Response to malfunction messages ..... 7.13 - 10
7.13.2.1 Selection of the response ..... 7.13 - 10
7.13.2.2 Parametrisation of the abnormal stopping ..... 7.13 - 12

7.13.3 Automatic restart ..... 7.13 - 15
7.13.3.1 Undervoltage error (E.UP) ..... 7.13 - 15
7.13.3.2 Overvoltage error (E.OP) ..... 7.13 - 15
7.13.3.3 Overcurrent error (E.OC) ..... 7.13 - 16
7.13.3.4 Malfunction messages and pre-warnings ..... 7.13 - 16

7.13.4 Base block ..... 7.13 - 16

7.13.5 Quick Stop ..... 7.13 - 17
7.13.5.1 Quick stop in the V/F characteristic operation ..... 7.13 - 17
7.13.5.2 Quick stop at closed-loop systems ..... 7.13 - 18
7.13.5.3 Time monitoring abnormal stopping ..... 7.13 - 19
7.13.5.4 Abnormal stopping via control word ..... 7.13 - 19

7.13.6 Speed search ..... 7.13 - 20
7.13.6.1 Speed search in the open loop operation ..... 7.13 - 20
7.13.6.2 Speed search at asynchronous motors in the closed-loop operation with encoder ..... 7.13 - 20
7.13.6.3 Speed search at asynchronous motor in closed-loop operation without encoder(ASCL) ..... 7.13 - 20

7.13.7 LAD-stop ..... 7.13 - 21
7.13.7.1 Current-dependent ramp stop ..... 7.13 - 21
7.13.7.2 DC link voltage-dependent ramp stop ..... 7.13 - 21
7.13.7.3 Ramp stop dependent on a digital input ..... 7.13 - 22

7.13.8 Current limit constant run (stall function) ..... 7.13 - 22
7.13.8.1 Function of the current limit ..... 7.13 - 24

7.13.9 Motor Protection Mode ..... 7.13 - 25

7.13.10 Power-Off function ..... 7.13 - 29

7.13.11 GTR7-Control ..... 7.13 - 36
7.13.11.1 Activation via digital input ..... 7.13 - 36
7.13.11.2 Adjustment of the activation threshold ..... 7.13 - 36
7.13.11.3 Activation conditions ..... 7.13 - 37

7.13.12 Special functions ..... 7.13 - 37

7.13 Protective Functions

The protective functions protect the inverter against switch off caused by overcurrent, overvoltage as well as thermal overheating. Furthermore, you can restart the drive after an error automatically (Keep-On-Running).

7.13.1 Error and warning messages

For diagnostic purposes, the inverter displays various malfunction- and error messages. Errors are all those events that trigger an immediate switch-off of the modulation, malfunctions allow a defined response (shutdown of the drive by abnormal stopping).
For some events (ext. error, bus monitor response, the drive hitting a limit switch, etc.), one can decide in the programming whether this is an error or a malfunction.
For some errors, e.g., the overload error, a pre-warning can be generated. This pre-warning is treated like a malfunction, i.e., the appropriate response to the pre-warning is programmable.

Example 1 (error):

The inverter detects overcurrent and raises the error. Display in parameter ru.00: "Error! Overcurrent" (E. OC). Since this error cannot be predicted, there is no possibililty of a pre-warning. The modulation is switched off immediately and the drive spins down.

Example 2 (operating condition programmed as error):

The reaction of the bus monitor ("watchdog") shall trigger an error. Programming Pn.05: "Watchdog response" = 0 (error / no auto restart). Display in parameter ru.00: "Error! Watchdog" (E. buS). If a digital output is programmed on a fault signalling relay, the relay switches.

Example 3 (operating condition programmed as malfunction):

Hitting a hardware limit switch shall be treated as a malfunction. Desired response: Abnormal stopping, modulation switch-off after reaching standstill, no automatic restart.
Programming Pn.07: "Limit switch error response" = 1 (Stop / modulation off / no auto restart)
Display in parameter ru.00: "Warning! disabled direction of rotation clockwise" (A.PrF) or: "Warning! disabled direction of rotation counter clockwise" (A.Prr)
If a digital output is programmed on a fault signalling relay, the relay does not switch by default.
(If the digital output shall also respond to malfunctions, switching condition 6 "abnormal stopping / error" must be used. Alternatively, Pn.65 can be adjusted so that a malfunction is treated like an error with respect to the status displays and the digital outputs. See chapter 7.13.12)

Example 4 (pre-warning):

When the heat sink temperature exceeds a limit (dependent on the inverter type), the modulation is switched off, the inverter raises an error. With Pn.11 "heat sink overtemperature warning level" a temperature can be set at which a pre-warning is generated.
Desired response: when exceeding the temperature of Pn.11,. the inverter executes an abnormal stop and switches off the modulation. When the heat sink temperature decreases again, an automatic restart shall occur.
Programming Pn.10 "heat sink overtemperature response" = 4 (stop/modulation off/ auto restart).
Display in parameter ru.00: "Warning! Heat sink temperature" (A. OH)
If the temperature decreases due to the abnormal stopping, the inverter executes an automatic restart. If, however, the heat sink temperature continues to rise and exceeds the error limit, the inverter raises an "Error! Heat sink temperature" (E. OH).

7.13.1.1 Undervoltage

"Error! Undervoltage" (E.UP) is triggered if the DC link voltage drops due to brownouts or a generally too weak power grid. For this error, the automatic restart can be activated.

Error phase loss

"Error! Phase loss" (E. UPh) is identified indirectly via the ripples in the DC link voltage.
If one power phase is missing, the waviness in the DC link is considerably increased under load. In no-load operation or at small load, the error of the power phase is, however, not recognised. For this error, an automatic restart cannot be programmed.

7.13.1.2 Overvoltage

"Error! Overvoltage" is triggered if the DC link voltage increases beyond the overvoltage level due to energy recovery in regenerative operation.

7.13.1.3 Overcurrent

The "Error! Overcurrent" (E.OC) is trigger when the "OC-tripping current" (see technical data in the instruction manual power circuit F5) is exceeded.
If this error occurs permanently, either the connected motor (short circuit or ground fault) or the inverter itself is defective.
Below the overcurrent limit lies the "maximum short time current limit". If this is exceeded, the hardware current limit can be triggered with uF.15. The response of this function is not considered an error or malfunction, and the corresponding switching conditions are not set. If the function is active, the status "80: hardware current limitation active" (HCL) is displayed.
For current regulated drives, this function should be deactivated since it may have negative effects for the motor model calculation and the behaviour of the drive.

7.13.1.4 Overload

The inverter-overload protection is a function that triggers an error for which, however, a pre-warning can be generated.
There are two overload protection functions: one for the range of standstill and low frequencies (overload at standstill/ OL2) and one for the remaining frequency range (overload/ OL).
With Pn.09 "Overload warning level" a value between 0...100 % can be adjusted, for which the "Warning! Overload" and the "Warning! Overload during standstill", respectively, is set. The response to the overload warning is set with Pn.08 "Overload warning response".

Overload in the standstill (OL2)

The implementation of the function "19: Overload during standstill" is described in chapter 2.1.9 "Overload protection in the lower speed range". The motor current is guided via a PT1 link with a time constant of 280 ms. If this delayed current exceeds the OL2 limit, "Error! Overload during standstill" (E.OL2) is triggered. If the delayed current decreases to 0 again, the inverter enters the status "20: Overload during standstill fixed" (E.nOL2). The error can now be reset.

Overload (OL)

The implementation of the general overload protection is described in chapter 2.1.8 "Overload characteristics". If the 100% load factor of the inverter is exceeded by 5 %, the internal overload counter starts to count forward. If the load factor falls below 100 %, the counter counts backward. The current counter content can be read in parameter ru.39. Upon reaching 100 % the inverter switches off with error message "E.OL" and the counter counts backward. If it reaches 0 %, the status changes to E.nOL and the error can be reset.

7.13.1.5 Inverter over temperature

Heat sink overtemperature

The heat sink temperature acquisition protects the power module from thermal overload. The temperature at which the inverter switches off with error message "8: ERROR! Overtemperature" (E.OH) depends on the power circuit (generally 90°C).
After cooling period the status changes from "Error! Overtemperature" to "36: Heat sink temperature normal again" (E.nOH) and is therefore resettable.
With Pn.11 "Heat sink overtemperature warning level" a level of between 0° C and 90 °C can be set, at which the pre-warning is triggered. The response to the warning message is set with Pn.10 "Heat sink overtemperature response".

Internal overtemperature

The interior temperature monitoring protects the inverter against malfunctions caused by too high temperature in the interior of the inverter. Upon exceeding a unit-specific temperature the interior fan is activated. If the temperature is still too high after about 10 min., the disconnecting time set with Pn.17 "internal overtemperature disconnecting time" (0...120s) starts.
With the start of the disconnecting time, switching condition "11: Warning internal overheating" is met and the response to the warning message set in Pn.16 "internal overtemperature response" is executed.
After expiration of the disconnecting time, "6: ERROR! Overtemperature interior" (E.OHI) is triggered.
When the interior temperature has dropped again, the inverter state changes again to "7: interior temperature back to normal" (E.nOHI). The error can now be reset.

7.13.1.6 External fault

With Pn.04 "Input selection external error", one or more digital inputs can be programmed which can trigger the error "31: ERROR! External input" (E.EF).
With Pn.03 "Response to external error" , the response of the inverter to the digital input is defined. With Pn.65/ bit 1 "2: Pn.04 = E.UP", the function of Pn.04 can be changed and the triggering of an error via a digital input can be deactivated.

7.13.1.7 Bus error

The inverter contains two watchdogs that monitor the communication between an external bus, the operator, and the inverter control.
With parameter Pn.05 "Response to E.bus", the response to a watchdog error is defined. Dependent on the chosen adjustment, either "Error! Watchdog" (E.buS) or "Warning! Watchdog error" (A.buS), is issued or a warning message via a digital output is generated.

Watchdog time (Pn.06)

This watchdog monitors the communication at the operator interface. With an activated watchdog, the response set under Pn.05 is triggered after expiration of an adjustable time (0.01...40 s) without received telegrams.
The function is deactivated by setting the value „0: off“.

HSP5 Watchdog time (SY.09)

The HSP5 Watchdog function monitores the communication of the HSP5 interface (control card - operator; or control card - PC). After expiration of an adjustable time (0,01...10 s) without incoming telegrams, the response adjusted in Pn.05 is triggered. Value „0: off“ deactivates the function.

7.13.1.8 Limit switch error

Hardware limit switch

The inputs assigned with the functions „32: forward“ (limit switch right) and „64: backward" (limit switch left) serve as hardware limit switches. Therefore, the rotation setting via terminals (oP.01 "source of rotation direction" = 2...6) may not be used if the limit switch function is to be used.
To protect against cable breakage, an unconnected input means that the drive has run onto the limit switch. Depending on the setting of parameter Pn.07 "Limit switch error response", the response to the hardware limit switches can be a malfunction.
Hitting a limit switch with clockwise direction of rotation is indicated by status "46: ERROR! disabled direction of rotation clockwise" (A.PrF) and:94 ABN. disabled direction of rotation clockwise" (A.PrF), respectively. The corresponding messages for counter clockwise direction of rotation are "47: ERROR! disabled direction of rotation counter clockwise" (A.PrF) and:95 ABN. disabled direction of rotation counter clockwise" (A.Prr), respectively.
Attention: Only the limit switch for the current direction of rotation is ever evaluated, i.e., for clockwise rotation, only the right limit switch is considered and the left limit switch is ignored. The analog applies to counter clockwise rotation.
Furthermore, one must ensure that the drive stops at the limit switch. If the limit switch is overrun, the drive can subsequently continue to run in the disabled direction.

Software limit switch

The software limit switches complement the function of the hardware limit switch.
They are active only after an approach to reference point or the setting of reference points, respectively (see chapter 7.12.2 approach to reference point).
In contrast to hardware limit switches, the software limit switches can lose their protective function by, e.g., a faulty approach to reference point. Their advantage is that they cannot be overrun.
The permissible range of the actual position ru.54 lies between PS.15 "software limit switch left" and PS.16 "software limit switch right"
The software limit switches are active in the vector controlled operation, in synchronous mode, in positioning mode, or in contouring mode.
The response to the software limit switch is set in parameter Pn.66 "Response software limit switch" . In the factory setting, the software limit switches are deactivated.
Reaching the limit switch with clockwise direction of rotation is indicated by status "44: ERROR! Software limit switch clockwise rotation" (E.SLF) and "104: ABN. Software limit switch clockwise rotation" (A.SLF), respectively. The corresponding messages for counter clockwise direction of rotation are "45: ERROR! Software limit switch clockwise rotation" (E.SLF) and "105: Software limit switch counter clockwise rotation" (A.SLr), respectively.

7.13.1.9 Motor protection with temperature sensor

The motor can be protected from thermal destruction due to permanent overloading by connecting a PTC or a KTY-sensor.
If PTC or KTY report an overtemperature, the disconnecting time set in Pn.13 "Motor overtemperature disconnecting time" starts. The switching condition "9: Pre-warning motor overheating" is set and the response to the pre-warning set in Pn.12 "Motor overtemperature" is executed. If a value of 1...5 is selected in Pn.12, the inverter displays the malfunction „Warning! Motor overheating" (A.dOH).
After expiration of the disconnecting time Pn.13, the error "Error! Motor overheating" (E.dOH) is triggered.

If the overtemperature condition is past, the message "All clear! Motor overheating" (A.ndOH) or "Motor temperature back to normal" (E.ndOH) is issued. Only then the error can be reset or the automatic restart can be carried out.

7.13.1.10 Software motor protection

Additionally to the monitoring of the motor with a temperature sensor, a motor protection can be realised also by monitoring the motor current.
The monitoring function is implemented differently for asynchronous and synchronous motors.

Emulation of an electronic motor protection relay

The functional description (times, current level, etc.) are found in chapter 7.13.9 "electronic motor protection".
The response to the triggering of the electronic motor protection relay can be defined with Pn.14 "motor protection response". Dependent on the programming, the inverter raises "30: ERROR! Motor protection function" (E.OH2) or "97: ABN. Motor protection function" (A.OH2).
After the cooling period, the error or the malfunction, respectively, can be reset.

Motor current monitoring for servo drives

The functional description (times, current level, etc.) are found in chapter 7.13.9 "electronic motor protection".
When the protection function triggers, the error "30: ERROR! Motor protection function" (E.dOH) is triggered. The error is resettable after approximately 100 ms.
With Pn.15 "Motor protection function level", a level of 0...100 % (100% = triggering time of the error) can be set at which a pre-warning is generated.
The response to the pre-warning is set with Pn.14 "Motor protection function response". With this, an abnormal stopping can be executed before the drive raises an error. During the abnormal stopping, the inverter has status "97: ABN. Motor protection function" (A.OH2). The switching condition "10: Motor protection relay function" is met.

7.13.1.11 Set selection error

Sets can be disabled with Fr.03 "Parameter set lock". If a disabled set is selected, the inverter remains in the old set, i.e., no set change occurs.
The response to the selection of a disabled set is set via Pn.18 "Set selection error response". In the factory setting, the error "39: ERROR! Parameter set selection" (E.Set) is triggered. For Pn.18 = 1...5 a malfunction "102: ABN. Set selection error" (A.Set) is generated. For Pn.18 = "6: Function disabled", the drive continues running in the old set without message.

7.13.1.12 Encoder interface / encoder error

Encoder interface error

On switch on, the control checks if an encoder interface is present, and if so, which one. If an invalid encoder identifier is read (e.g., due to EMC-malfunctions), or if the data exchange with the interface card cannot be established, the drive reports "52: ERROR! Encoder interface" (E.Hyb).
The inverter state "59: ERROR! Interface change" (E.HybC) is displayed when the encoder interface card is removed and replaced by a different type of interface prior to the switch on.

Encoder error

The status messages "32: ERROR! encoder 1 (E.EnC1)“ or „34: ERROR! Encoder 2 (E.EnC2)" is trigger if:

- a defective track is identified for an incremental encoder interface with monitoring of the incremental tracks
- for resolver interfaces, signals outside of the specifications are identified
- for encoder types that permit the storage of data (e.g., motor data, system position, etc.) in the encoder, an invalid identifier is read, and therefore the stored data cannot be interpreted.

For "intelligent" encoder interfaces (e.g., absolute encoder, Sin-/Cos encoder), "35: ERROR! Encoder change" (E.EnCC) is trigger if:

- the encoder type or the interface type of the current software of the control board are not supported
- the signals of the absolute track or the signals of the incremental track are defective
- the identified position deviation between incremental position and absolute position is too large
- the encoder transmits an error message
- the encoder (for encoder types with data storage in the encoder) was swapped
- Adjusted increments per revolution of the inverter does not agree with the encoder increments per revolution

Error E.EncC can only be reset with parameter Ec.00.

Exception! An error due to incorrect encoder increments per revolution is immediately (without reset!) reset if the correct encoder increments per revolution is set.

Not all monitoring functions are available for all interface types. A more detailed description of the encoder error can be found in chapter 7.11 "Speed measurement".

7.13.1.13 Speed limit exceeded

The status "58: ERROR! Speed limit exceeded" (E. OS) is triggered when ru.07 "actual value display" exceeds either the value of oP.40/ oP.41 "output frequency limit" or the value of ru.79 "abs. speed EMC" (only for synchronous motors).
With oP.40 / oP.41, the user sets limits that may not be exceeded by the application under any circumstances. ru.79 shows the maximum speed for a synchronous motor which, if exceeded, leads to an EMC of the motor high enough to damage the DC-intermediate circuit of the inverter.
Reason for the occurence of excessive speed can be too small a distance between the maximum setpoint and the speed limit, so that overshoots can trigger the error. Other causes can be (e.g., caused by EMC) malfunctions in the speed measurement or a noisy, insufficiently smoothed speed estimate in the encoderless control (SCL or ASCL).

7.13.1.14 Speed controller limit reached

Pn.75 "response to error E.SCL" determines how the output should respond if the speed controller reaches the limit, i.e., if the set torque reaches the maximum possible value. In the factory setting, this operating condition can be applied to a digital output (switching condition "53: speed control at the limit"). With Pn.75, however, it is also possible to execute an abnormal stopping on reaching the torque limit (Status "107: ABN. Speed controller limit"/ A.SCL) or to trigger an error (Status "25: ERROR! speed controller limit“ / E.SCL)

7.13.1.15 Maximum acceleration exceeded

The maximum permissible acceleration is defined with Pn.79 "Acceleration limit 1/s^2".
Pn.80 "Acceleration scan time" determines the time period used for acceleration averaging.
The change of the actual speed (ru.07) in this time period, divided by the scan time (Pn.80), gives the current acceleration. The speed difference must be converted from 1/min to 1/s for the calculation of the acceleration.

$$\text{Acceleration} = \frac{\text{Speed change during scan time}}{60 \times \text{acceleration scan time (in seconds)}}$$

If the acceleration exceeds the limit (Pn.79), the response defined by Pn.81 "Acceleration error response" is triggered.
The drive, dependent on the programming, enters the status "24: ERROR! Maximum acceleration" (E.Acc) or "106: ABN. Maximum acceleration" (A.Acc)

7.13.1.16 General power circuit error

Monitors for the internal hardware (e.g. fans) are integrated on some inverter types. If one of these monitoring circuits reports an error, "12: general power circuit error" (E. PU) is triggered.

7.13.2 Response to malfunction messages

7.13.2.1 Selection of the response

Abnormal stopping (i.e., automatic shutdown of the drive) is possible for all errors that do not enforce immediate shutdown of the modulation or for which pre-warnings can be generated.
If abnormal stopping is not sensible in the application, the possibility to set a digital output is available for many malfunctions.

The response is programmable for the following malfunctions:

-	Ext. error	Pn.03	Reaction to external fault
-	Watchdog	Pn.05	Watchdog response
-	Hardware limit switch	Pn.07	proh. rot. stopping mode
-	Set selection error	Pn.18	E.Set stopping mode
-	Software limit switch	Pn.66	Response software limit switch
-	Speed controller limit	Pn.75	Response to error E.SCL
-	Acceleration monitoring	Pn.81	Acceleration error response

Other errors switch off the modulation, but a pre-warnings can be generated prior to their triggering. In the time between the pre-warning signal and the triggering of the error, the drive can be hut down via abnormal stopping. The response is programmable:

-	overload	Pn.08	warning OL stop. mode
-	Heat sink overtemperature	Pn.10	Heat sink overtemperature response
-	internal overtemperature	Pn.16	Internal overtemperature response

The motor protection functions can be deactivated. If they are to be used, a pre-warning can be generated here as well prior to the triggering of an error, providing time to shut down the drive.

-	motor protection	Pn.14	Motor protect. function response
-	Motor overtemperature	pn.12	Motor overtemperature response

The descriptions of the errors and the corresponding pre-warning signals are contained in chapter 8.1 "Error assistance".

The following responses can be used for all malfunctions and errors, respectively:

Pn.03, Pn.05, Pn.07, Pn.08, Pn.10, Pn.12, Pn.14, Pn.16, Pn.18, Pn.66, Pn.75, Pn.81: Response	
Value	Explanation
0: error / no auto restart	the malfunction turns into the error (Status: E.xx), immediate shutdown of the modulation, restart only after RESET
1: Stop / modulation off/ no auto restart	Deceleration at the abnormal stopping-ramp or the torque- and current limit, respectively, shutdown of the modulation after reaching speed 0, restart only after RESET
2: Stop / modulation on / no auto restart	Deceleration at the abnormal stopping-ramp or the torque- and current limit, respectively, holding torque after reaching speed 0, restart only after RESET
3: Modulation off / auto restart	Immediate shutdown of the modulation, automatic restart as soon as the malfunction is resolved
4: Stop / modulation off/ auto restart	Deceleration at the abnormal stopping-ramp or the torque- and current limit, respectively, shutdown of the modulation after reaching speed 0, automatic restart, as soon as the malfunction has been resolved
5: Stop / modulation on / auto restart	Deceleration at the abnormal stopping-ramp or the torque- and current limit, respectively, holding torque after reaching speed 0, automatic restart, as soon as the malfunction has been resolved

Pn.03, Pn.05, Pn.08, Pn.10, Pn.14, Pn.75, Pn.81: Response	
Value	Explanation
6: Warning via digital output	No response of the drive, the malfunction (and pre-warning, respectively) can be issued via a digital output

The response to the malfunction message limit switch error (hardware or software) and set selection error can be switched off completely.

Pn.07, Pn.18, Pn.66: Response	
Value	Explanation
6: Function switched off	the malfunction is ignored, no response of the drive, no message via digital output possible

For the malfunction "motor overtemperature", several additional choices exist:

Pn.12: Motor overtemperature response	
Value	Explanation
6: Warning via digital output	the motor temperature is monitored, the drive does not execute an automatic abnormal stop during the pre-warning period, the pre-warning message can only be issued via a digital output. After expiration of the pre-warning period, the inverter goes to error E.doH
7: no error	Motor temperature is not monitored, the error motor overtemperature is never triggered. No message via digital output possible
8: no error if modulation is off	The motor temperature is not monitored while the modulation is switched off. If the modulation is switched on, monitoring occurs, too. The pre-warning signal, and – after expiration of the pre-warning period - the error motor overtemperature is generated.
9: dOH-response	Error is only released if the modulation is switched off. Warning via digital output, as soon as the dOH-signal is released (= value 6)

For the malfunction "internal overtemperature", there are 2 response options as well:

Pn.16: Internal overtemperature	
Value	Explanation
6: Warning via digital output	The monitoring of the internal temperature is active, but the drive does not execute an automatic abnormal stop. A pre-warning signal can be issued via a digital output
7: Error deactivated	Monitoring of the internal temperature never triggers an error. A pre-warning signal does not exist.

7.13.2.2 Parametrisation of the abnormal stopping

The abnormal stopping function is different for vector controlled systems (CS.00 = 456) and for systems with V/f-characteristic control.

Quick stop for closed-loop systems

For abnormal stopping with closed-loop systems, the drive is decelerated with the adjusted ramp time and at the torque limit, respectively.

Pn.60: Quick stop time	
Value	Explanation
0...300 s	Deceleration ramp for abnormal stopping-function

For the abnormal stopping, the "normal" torque limitations of the application often do not apply since the automatic shutdown is always a malfunction response. To permit a quicker deceleration with a greater torque here, there is a unique torque limit for abnormal stopping.

Pn.61: Quick stop torque limit	
Value	Explanation
0...32000.00Nm	Quick stop torque limit

The torque limitation superimposed by the limiting characteristic and the available current remain in effect. For asynchronous motors, the maximum cutoff torque for abnormal stopping can also be increased to make more torque available for braking, even in the field weakening range.

Pn.67: Quick stop maximum torque corner speed	
Value	Explanation
0...32000.00Nm	the limiting characteristic for abnormal stopping is defined by dr.16 instead of Pn.67

Quick stop at open loop systems

For abnormal stopping with v/f-characteristic control, the drive is decelerated with the adjusted ramp time, and at the torque limit, respectively. Whether braking occurs at the ramp or at the current limit is defined in parameter Pn.58.

If no abnormal stopping shall be executed, there are different possibililties for the response, depending on the type of malfunction.

Additionally, for most malfunctions, issuing the value 6 = warning via a digital output is possible.
Thereby, the inverter does not automatically execute an abnormal stopping. With the warning via a digital output, however, an external control is given the opportunity to respond to the malfunction as is appropriate for the application. To issue the warning message, a digital output must be programmed with the corresponding switching condition (see chapter 7.3 Programming of the digital outputs).

Pn.58: Quick stop mode			
Bit	Meaning	Value	Explanation
0	Quick stop mode (F5-G)	0: Ramp generator	Abnormal stopping at the abnormal stopping ramp
		1: Differential controller	Deceleration time for abnormal stopping is determined by means of a controller
1	Quick stop act. value (F5-G)	0: Apparent current	Current limit for deceleration refers to the apparent current
		2: Active current	Current limit for deceleration refers to the active current
2	Abnormal stopping via control word (SY.50)	0: SY.50 modulation off	Shutoff of the modulation after reaching of speed 0 due to abnormal stopping
		4: SY.50 modulation on	Fast stop with holding torque on reaching speed 0
3	Status bit at standstill	0: Status bit on	The status bit "abnormal stopping" remains active until leaving the function
		8: Status bit off	The status bit "abnormal stopping" is reset when the drive has reached standstill

For abnormal stopping at the ramp generator, parameter Pn.60 is the ramp time for the deceleration ramp.

Pn.60: Quick stop time	
Value	Explanation
0...300 s	Deceleration ramp for abnormal stopping-function

At abnormal stopping with differential controller, this ramp is modified that the drive decelerates preferably at a
current limit.
This current limit is set in Pn.59 "abnormal stopping level".

Pn.59: Quick stop level	
Value	Explanation
0...200 %	Current limit for deceleration = 0..200% rated inverter current (In.01)

With Pn.58 bit 1, it can be selected whether the inverter decelerates at the active current- or the apparent current-limit.

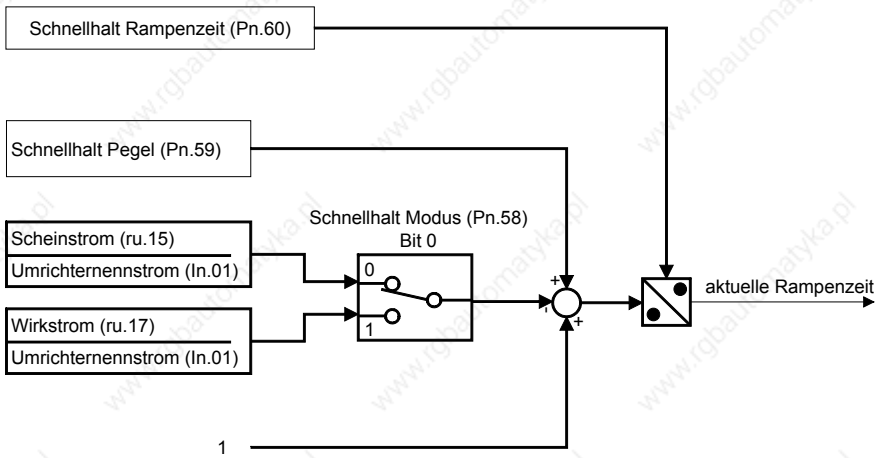

Time monitoring abnormal stopping

For safety, a maximum time for the abnormal stopping-function can be programmed.

Pn.68: Max. abn. stopping time	
Value	Explanation
0,01...100,00 s	time after which the inverter switches from malfunction- ("abnormal stop" A.XX) to the error state (E.XX)

If the inverter is still in the malfunction state (A.XX) after this time (no RESET or automatic restart was executed), the inverter switches off the modulation and changes to the corresponding error state (A.XX => E.XX).

Abnormal stopping via control word

Abnormal stopping can also be triggered via the control word (SY.43 and SY.50, respectively). The parameter Pn.58 abnormal stopping mode determines the behaviour of the abnormal stopping via control word.

Pn.58: Quick stop mode			
Bit	Meaning	Value	Explanation
2	Abnormal stopping via control word (SY.50)	0:SY.50 modulation off	Shutoff of the modulation after reaching of speed 0 due to abnormal stopping
		4: SY.50 modulation on	Fast stop with holding torque on reaching speed 0
3	Status bit at standstill	0: Status bit on	The status bit "abnormal stopping" remains active until leaving the function
		8: Status bit off	The status bit "abnormal stopping" is reset when the drive has reached standstill

7.13.3 Automatic restart

With the automatic restart, the inverter error automatically resets or automatically terminates the abnormal stopping caused by a malfunction or pre-warning.
The function can be activated separately for the various errors and malfunctions with the Pn-parameters.

The automatic restart only makes sense if the error can be expected based on the application. Normally, the cause of the error must first be investigated and eliminated before the drive can be put back in operation by executing the reset.
Therefore, it must be selected after which errors an automatic restart should be executed

	Because of the independent starting of the machine safety measures must be provided for operating personnel and machine!

7.13.3.1 Undervoltage error (E.UP)

In Pn.00 "automatic restart E.UP", the automatic restart for the undervoltage error is activated in the factory setting.

A typical application for the automatic restart E.UP (Pn.00) is operation on a bad power grid where sporadic brownouts are to be expected. With this function, the application continues running as soon as the mains voltage is sufficiently high again.

For the undervoltage error, a time can be defined within which the automatic restart is permissible.

Pn.76: Max. E.UP warning time	
Value	Explanation
0: off	If the function automatic restart is activated, it is always executed after the undervoltage error (independent of the length of time the error was present). The error bit in the status word SY.44 and SY.51, respectively, is set as long as the inverter is in state E.UP.
0,01...32,00 s	After expiration of this time, no automatic restart is executed anymore. During this time, the error bit in status word SY.44 and SY.51, respectively, is not set. The progress message in ru.00 and the switching condition "4: error", however, display the undervoltage error.

7.13.3.2 Overvoltage error (E.OP)

The error overvoltage occurs mostly at high speed. By activation of Pn.01 "automatic restart E.OP", it can be avoided that the drive "spins down" for a long time after this error. This function makes sense only in combination with the speed search (see chapter 7.15).
The base-block time (bbL) is at least 1 second, even if the value in uF.12"base-block time" is smaller. Furthermore, the base-block time before the restart is always observed, even if uF.13 "motor de-excitation lower limit" is undershot.

7.13.3.3 Overcurrent error (E.OC)

The automatic restart after occurence of an overcurrent error is activated with Pn.02 "automatic restart E.OC". It can be used if burst-like overloads of the FI, e.g., due to blocking of the motor, can be expected in v/f-characteristic operation.
The base-block time is treated as in overvoltage errors.
After 10 restart attempts, the inverter state must be unequal to the base-block time or the overcurrent error for at least one second, otherwise the restart is aborted.

7.13.3.4 Malfunction messages and pre-warnings

A malfunction response with automatic restart is selected in parameters Pn.03, Pn.05, Pn.07, Pn.08, Pn.10, Pn.12, Pn.14, Pn.16, Pn.18, Pn.66, Pn.75 and Pn.81 with the values3...5.
The base-block time is observed only if the drive is above uF.13 "motor de-excitation lower limit".

7.13.4 Base block

After shutdown of the modulation (e.g., when opening the control release or if an error occurs), one must wait for the time shown in uF.12 "base-block time" before the modulation can be switched on again. During this phase, ru.00 displays the status "motor de-excitation" and the display shows "bbL", respectively.
If ru.42 "degree of modulation" is below uF.13 "motor de-excitation lower limit" when switching off the modulation, there is no base-block time. Even at low frequencies, the base-block time is not observed.
Exception: After overvoltage- or overcurrent-error, a minimum base-block time of 1s is inserted.
The parameters uF.12 and uF.13 are dependent on the power circuit and serve only as information for the user on which minimum switch-off times to expect in the application.
In parameter Pn.65 / bit 8 "256: bbL is not displayed", the status message "motor de-excitation" can be suppressed so that the event caused by the modulation switch-off becomes visible immediately.

PTC

A temperature sensor integrated into the motor winding is connected to the terminals T1/T2 of the inverter. If a resistance of 1650...4000 Ohm is exceeded, motor overtemperature is detected. If the resistance drops below 750...1650 Ohm, the state motor overtemperature is reset.

Thermal contact (NC contact)

A thermal contact integrated into the motor winding is connected to the terminals T1/T2 of the inverter. The opened state is recognised as motor overtemperature.

KTY

A special power circuit is necessary for this function. In Pn.62 "motor overtemperature level", a temperature in the range of 0...200 °C is defined which, when exceeded, causes a motor overtemperature message.
The current temperature is indicated in ru.46 "motor temperature". With a standard power circuit Pn.62 has no function. In the motor temperature display ru.46 only T1-T2 closed or T1-T2 open is displayed.

7.13.5 Quick Stop

The abnormal stopping-function serves to shut down the drive (mostly in case of a malfunction) as quickly as possible. Therefore, there is a separate ramp time (Pn.60: "Quick stop deceleration time") and, in closed-loop operation separate torque limits (Pn.61: "Quick stop torque limit", Pn.67: „Quick stop maximum torque corner speed“), which can be adjusted highter than the torque limits for normal operation, to provide the required fast deceleration.

In v/f-characteristic operation, one can choose in Pn.58 "Quick stop mode" between ramp generator and differential controller. For the differential controller, the time constant is set in Pn.60. The setpoint of the differential controller is defined in Pn.59: "Quick stop level", Pn.58 selects the actual value from either apparent current or active current.

The abnormal stopping can be activated by malfunction as well as via the control word (Sy.50 Bit 8). The functionality is the same in both cases but for state, "79: abnormal stopping" (StOP) is always displayed.

For all modes, one can choose whether the abnormal stopping-bit is reset in the status word (Sy.51 bzw. Sy.44 Bit 8) on reaching standstill, or whether it remains active until leaving the function.

Pn.58: Quick stop mode			
Bit	Meaning	Value	Explanation
3	Status bit at standstill	0: Status bit on	The status bit "abnormal stopping" remains active until leaving the function
		8: Status bit off	The status bit "abnormal stopping" is reset when the drive has reached standstill

7.13.5.1 Quick stop in the V/F characteristic operation

For abnormal stopping with v/f-characteristic control, the drive is decelerated with the adjusted ramp time, and with the differential controller, respectively.

Pn.58: Quick stop mode			
Bit	Meaning	Value	Explanation
0	Quick stop mode (V/F-characteristic operation)	0: Ramp generator	The deceleration time is Pn.60
		1: Differential controller	The deceleration time is dependent on the difference current limit (Pn.59) - present current. The time constant of the controller is adjusted by Pn.60, the setpoint is adjusted by Pn.59.
1	Quick stop act. value (V/F-characteristic operation)	0: Apparent current	Current limit for deceleration refers to the apparent current
		2: Active current	Current limit for deceleration refers to the active current

Depending on the setting of Pn.58, the ramp time of the abnormal stopping function or the time constant of the controller are set in Pn.60.

Pn.60: Quick stop acc/dec time	
Value	Explanation
0..300 s	Ramp time and time constant of the controller, respectively

The current limit for the differential control is set in Pn.59 "abnormal stopping level".

Pn.59: Quick stop level	
Value	Explanation
0...200 %	Current limit for difference control = 0..200% rated inverter current (In.01)

Block diagram of the differential control:

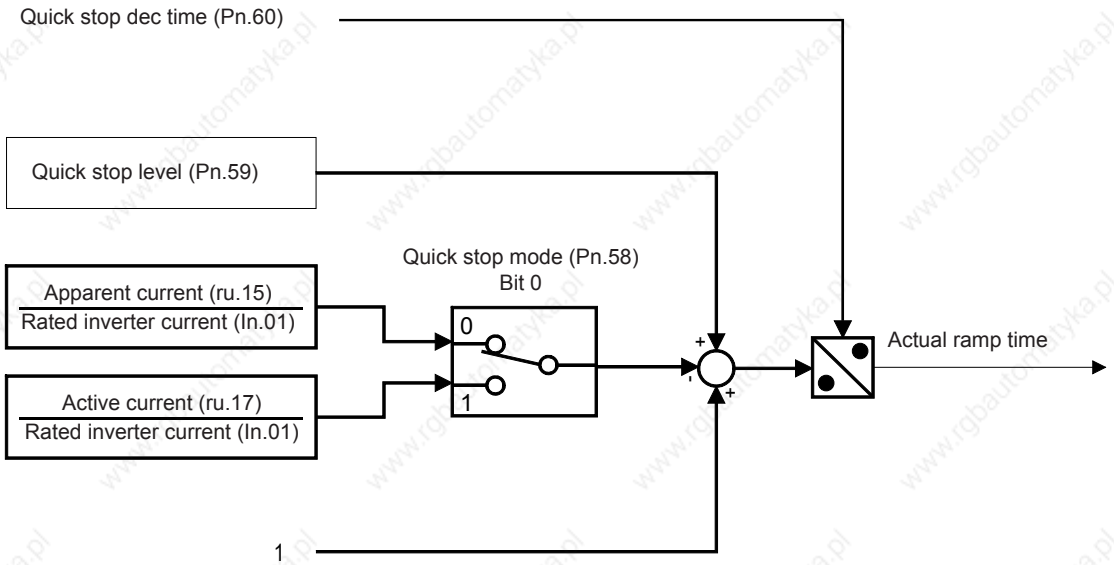

7.13.5.2 Quick stop at closed-loop systems

For abnormal stopping with closed-loop systems, the drive is decelerated with the adjusted ramp time, and at the torque limit, respectively.

Pn.60: Quick stop acc/dec time	
Value	Explanation
0...300 s	Deceleration ramp for abnormal stopping-function

For the abnormal stopping, the "normal" torque limitations of the application often do not apply since the automatic shutdown is always a malfunction response. To permit a quicker deceleration with a greater torque here, there is a unique torque limit for abnormal stopping.

Pn.61: Quick stop torque limit	
Value	Explanation
0...32000.00Nm	Quick stop torque limit

The torque limitation superimposed by the limiting characteristic and the available current remain in effect. For asynchronous motors, the maximum cutoff torque for abnormal stopping can also be increased to make more torque available for braking, even in the field weakening range.

Pn.67: Quick stop maximum torque corner speed	
Value	Explanation
0...32000.00Nm	the limiting characteristic for abnormal stopping is defined by dr.16 instead of Pn.67

7.13.5.3 Time monitoring abnormal stopping

For safety, a maximum time for the abnormal stopping-function can be programmed.

Pn.68: Max. abn. stopping time	
Value	Explanation
0,01...100,00 s	time after which the inverter switches from malfunction- ("abnormal stop" A.XX) to the error state (E.XX)

If the inverter is still in the malfunction state (A.XX) after this time (no RESET or automatic restart was executed), the inverter switches off the modulation and changes to the corresponding error state (A.XX => E.XX).

7.13.5.4 Abnormal stopping via control word

Abnormal stopping can also be triggered via the control word (SY.43 and SY.50, respectively). Then, the status shows "79: abnormal stopping“ (StOP). In Parameter Pn.58 „quick stop mode“ the behaviour for abnormal stopping can be defined via control word.

Abnormal stopping mode determines the behaviour for abnormal stopping via control word.

Pn.58: Quick stop mode			
Bit	Meaning	Value	Explanation
2	Abnormal stopping via control word (Sy.50)	0: Sy.50 modulation off	disabling of modulation after reaching speed 0
		4:Sy.50 modulation on	Fast stop with holding torque on reaching speed 0

7.13.6 Speed search

The speed search permits a relatively smooth engagement of the frequency inverter onto a running motor. Without activation of the speed search, the motor is always slowed down first. In closed-loop operation with encoder, this occurs at the torque limit, in closed-loop operation without encoder, the motor must be stopped with DC-current braking.
On activation of the speed search, however, the current speed is determined and the drive is accelerated or decelerated from this starting point to the setpoint speed, according to the adjusted ramps.
Parameter Pn.26 "Speed search starting condition" determines after which events the speed search is to be executed.

Pn.26 : Speed search condition		
Bit	Meaning	Explanation
0	1: Speed search after noP	Speed search after the status "no control release"
1	2: Speed search after power-on-reset	Speed search after power on
2	4: Speed search after reset	Speed search after execution of a reset
3	8: Speed search after auto reset	Speed search after automatic restart
4	16: Speed search after LS	Speed search after the status "standstill (modulation off)"

7.13.6.1 Speed search in the open loop operation

The speed search mode determines the frequency and voltage jumps as well as the maximum load factor with which the function works. Higher values let the function work faster, lower values make the function "softer".

7.13.6.2 Speed search at asynchronous motors in the closed-loop operation with encoder

In closed-loop operation with activated speed search, the ramp output value is set to the current actual speed. After the motor flux has been built up, the drive runs up to the setpoint speed.

7.13.6.3 Speed search at asynchronous motor in closed-loop operation without encoder(ASCL)

In closed-loop operation without encoder, the current actual speed must be estimated from the motor model. For special motors (e.g., high frequency spindles) or applications (e.g., operation in very high field weakening range), this estimate for the engagement onto a running motor may not work. The speed is then calculated incorrectly and the drive vibrates or the inverter raises a malfunction.
In these cases, the motor must be stopped by DC braking (see chapter 7.15.) before the drive can be restarted. Generally, however, the speed search is the most jerk-free and quickest path to switch to a running motor.

7.13.7 LAD-stop

The ramp stop function essentially fulfils two tasks. It reduces the risk of:

- Overcurrent errors (E.OC) during the acceleration or deceleration phase (only for v/f-characteristic operation)
- Overvoltage error (E.OP) during the deceleration phase (in all operating modes)

By stopping the ramp if Pn.24 "ramp stop current level" or Pn.25 ramp stop DC-link voltage level" is exceeded.
Moreover, the ramp stop function can be activated by a digital input.

Pn.22 selects which of the ramps (acceleration, deceleration or both ramps) can be stopped.

Pn.22: Ramp stop activation		
Bit	Meaning	Explanation
0	1: LA stop	The acceleration ramp is stopped if Pn.24 "ramp stop current level" is exceeded or if the input programmed in Pn.23 "ramp stop input selection" is set
1	2: Deceleration stop U-dep.	The acceleration ramp is stopped if Pn.25 "ramp stop DC-link voltage level" is exceeded or if the input programmed in Pn.23 "ramp stop input selection" is set
2	4: Deceleration stop I-dep.	The deceleration ramp is stopped if Pn.24 "ramp stop current level" is exceeded or if the input programmed in Pn.23 "ramp stop input selection" is set

In the operating modes positioning or synchronous running, this function is not active. If a ramp time is entered in Pn.60 for abnormal stopping, the deceleration stop is active.

7.13.7.1 Current-dependent ramp stop

In v/f-characteristic operation, overcurrent errors can occur due to short ramps.
Therefore, a current limit can be programmed with Pn.24 "ramp stop current level" that is frozen on exceeding the ramp generator output value(ru.02).
In closed-loop operation the current is limited in software via the control-internal current and torque limits. Therefore the functions acceleration stop (LA-Stop) and current-dependent deceleration stop (LD-Stop (I)) are useless.

Pn.25: Ramp stop current level	
Value	Explanation
0...200%	Current level at which the ramp is stopped

If the acceleration stop is active in the vector controlled operation, so that the interruption of the ramp via a digital input can be used, the current level in Pn.25 must be set to 200% to avoid negative effects.

7.13.7.2 DC link voltage-dependent ramp stop

The LD-Stop (U) function can be used to prevent overvoltage errors during deceleration.
During deceleration energy is refeed into the frequency inverter, which causes a rise of the DC-link voltage.
If too much energy is recovered, the inverter can switch to overvoltage- (OP) error.
If the LD-Stop (U) function is activated with Pn.22, the DEC-ramp is stopped when the current DC link voltage (ru.18) exceeds the adjusted ramp stop-DC-link voltage level (Pn.25).

Pn.25: LD voltage	
Value	Explanation
200V...1200V	DC-link voltage level at which the ramp is stopped

Overvoltage errors cannot always be securely prevented with this protection function, because after setting the ramps and the speed controller, further deceleration can occur despite stopping the ramp. If the drive decelerates, e.g., at the torque limit, and can therefore not follow the ramp, it does not help to stop this ramp. An undershoot of the speed controller due to a sudden termination of the ramp can also lead to further energy recovery in the DC link.
Generally, the deceleration process is slowed down by this protection function. For a dynamic deceleration, the use of a braking resistor is necessary.

7.13.7.3 Ramp stop dependent on a digital input

With Pn.23 "ramp stop input selection", a digital input can be selected for triggering the ramp stop. This input is only active if the stop is permitted in Pn.22 for the corresponding ramp.

7.13.8 Current limit constant run (stall function)

The Stall-function protects the frequency inverter against overload.
If the current (depending on the setting of the active or the apparent current in Pn.19) reaches the current limit (Pn.20),
an attempt is made to lower the load by increasing / decreasing the output frequency.

Whether the output frequency must be increased or decreased depends on the torque characteristic of the application. For a fan, e.g., the load factor increases with the speed, and the output frequency must be reduced during overload. For a drilling machine, the load factor decreases with the speed, and the drive must therefore be accelerated during overload.

When falling below the maximal constant current the inverter accelerates / decelerates again with the normal ramp times.
The stall function is active until the original setpoint speed is reached.

This protection function is active only for F5A-M in open loop operation (cS.00 = off).

The basic mode of operation is determined with Pn.19:

Pn.19: Stall mode			
Bit	Meaning	Value	Explanation
0, 1	Frequency limiting	0: oP.06, 07 respectively oP.10, 11	Final value to which it is possible to decelerate/accelerate.
		1: 0 rpm respectively oP.10, 11	
		2:oP.06, 07 respectively oP.40, 41	
		3: 0 rpm respectively oP.40, 41	

further on next side

Pn.19: Stall mode			
Bit	Meaning	Value	Explanation
2	Control characteristic in generator operation	0: no change	With this bit, it is set whether the control direction (frequency increase and decrease, respectively.) inverts in generator operation.
		4: Inversion	
3	Ramp control	0: Ramp generator	The frequency is increased/decreased by way of the ramp generator. The ramp time is preset by Pn.21.
		8: Differential controller	The increase / decrease of the frequency is done by a controller. The rate of change is dependent on the difference current limit (Pn.20) - present current. The time constant of the controller is adjusted by Pn.21, the setpoint is adjusted by Pn.20.
4	Release of the function	0: only at constant run	Stall function only active at constant run (see inverter state)
		16: always (also during the ramp)	Stall function always active
5	Variable	0: Apparent current	The stall function intervenes if the apparent current (ru.15) exceeds the current level Pn.20.
		32: Active current	The stall function intervenes if the amount of the active current (ru.17) exceeds the current level Pn.20.
6	Control direction	0: Deceleration	Fits the function to the torque / speed characteristic of the application. Examples: For a fan, one must decelerate if the current level is exceeded. For drilling machines, one must accelerate.
		64: Acceleration	
7	Level decrease above rated frequency	0: no	Determines whether the current limit that activates the stall function should be decreased above the rated point. The decrease is then done according to the following formula: $\text{Current limit} = \text{Pn.20} \left(\frac{\text{Rated point (uf.00)}}{\text{Actual frequency (ru.03)}} \right)^2$
		128: yes	

Stall level (Pn.20)

The current limit is adjusted in parameter Pn.20. When exceeding this limit, the inverter increases or decreases automatically the output frequency (depending on the adjustment in Pn.19) in order to reduce the load.

Pn.20: Stall level	
Value	Explanation
0...199 %	Current limit in % (reference value: 100% = rated current of the FI (In.01))
200: off	Stall function deactivated

Stall acc/dec time (Pn.21)

The rate of change of the output frequency is dependent on Pn.21. Depending on the setting of Pn.19, the ramp time of the stall function or the time constant of the controller is adjusted here.

Pn.21: Stall acc/dec time	
Value	Explanation
0...300s	Ramp time and time constant of the controller, respectively

7.13.8.1 Function of the current limit

Picture 7.13.8.1 Function of the current limit at constant run (default setting)

In the operating modes positioning or synchronous running, this function is not active. If a quick stop ramp time is entered in Pn.60 for abnormal stopping, the deceleration stop is active.

Current-dependent ramp stop

In v/f-characteristic operation, overcurrent errors can occur due to short ramps.
Therefore, a current limit can be programmed with Pn.24 "ramp stop current level" that is frozen on exceeding the ramp generator output value(ru.02).
In closed-loop operation, the current is limited in software via the control-internal current and torque limits. Therefore the functions acceleration stop (LA-Stop) and current-dependent deceleration stop (LD-Stop (I)) are useless.

Pn.25: Ramp stop current level	
Value	Explanation
0 .. 200%	Current level at which the ramp is stopped

If the acceleration stop is active in the vector controlled operation, so that the interruption of the ramp via a digital input can be used, the current level in Pn.25 must be set to 200% to avoid negative effects.

DC link voltage-dependent ramp stop

The LD-Stop (U) function can be used to prevent overvoltage errors during deceleration.
During deceleration energy is refeed into the frequency inverter, which causes a rise of the DC-link voltage.
If too much energy is recovered, the inverter can switch to overvoltage- (OP) error.
If the LD-Stop (U) function is activated with Pn.22, the DEC-ramp is stopped when the current DC link voltage (ru.18) exceeds the adjusted ramp stop-DC-link voltage level (Pn.25).

Pn.25: LD voltage	
Value	Explanation
200V...1200V	DC-link voltage level at which the ramp is stopped

Overvoltage errors cannot always be securely prevented with this protection function, because after setting the ramps and the speed controller, further deceleration can occur despite stopping the ramp. If the drive decelerates, e.g., at the torque limit, and can therefore not follow the ramp, it does not help to stop this ramp. An undershoot of the speed controller due to a sudden termination of the ramp can also lead to further energy recovery in the DC link.

Generally, the deceleration process is slowed down by this protection function. The use of a braking resistor is necessary for a dynamic deceleration.

Ramp stop dependent on a digital input

With Pn.23 "ramp stop input selection", a digital input can be selected for triggering the ramp stop.
This input is only active if the stop is permitted in Pn.22 for the corresponding ramp.

7.13.9 Motor Protection Mode

Functional description for F5A-M and F5H-M

The motor protective function protects the connected motor against thermal destruction caused by high currents. The function corresponds largely to mechanical motor protective components, additionally the influence of the motor speed on the cooling of the motor is taken into consideration. The load of the motor is calculated from the measured apparent current (ru.15) and the adjusted rated motor current (dr.12).
For motors with separately driven fan or at rated frequency of a self-ventilated motor following tripping times (VDE 0660, Part 104) apply:

1,2	• I_n	⇒ 2 hours
1,5	• I_n	⇒ 2 minutes
2	• I_n	⇒ 1 minute
8	• I_n	⇒ 5 seconds

Fig. 7.13.8.a Motor protection mode

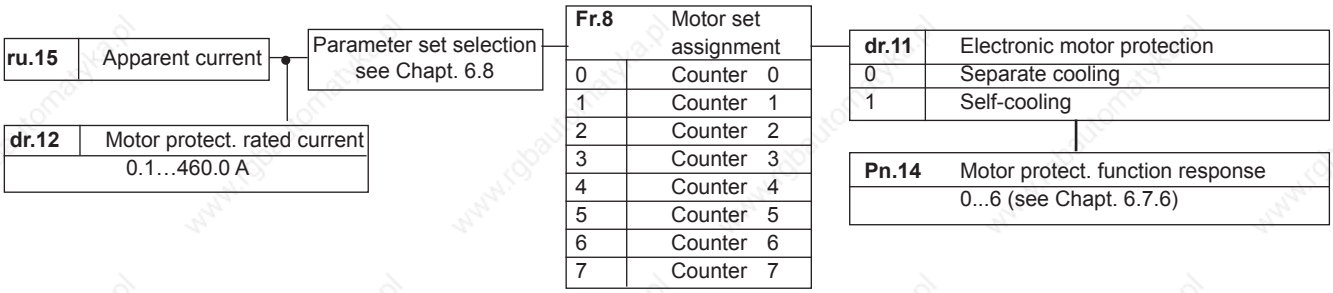

Motor protection mode (dr.11)

With this parameter, the cooling mode of the motor is set.

dr.11: Motor protection mode	
Value	Function
0	Separate cooling (default)
1	Self-cooling

Motor protection rated current (dr.12)

This parameter specifies for each set the rated current (= 100% utilisation) for the motor protective function. The motor protection-load is calculated as follows:

$$\text{Motor protection-load} = \frac{\text{Inverter Apparent current (ru.15)}}{\text{Motor protection rated current (dr.12)}}$$

Motor protective function response (Pn.14)

Pn.14 specifies the performance of the drive on activation of the motor protective function.

Fig. 7.13.8.b Tripping times

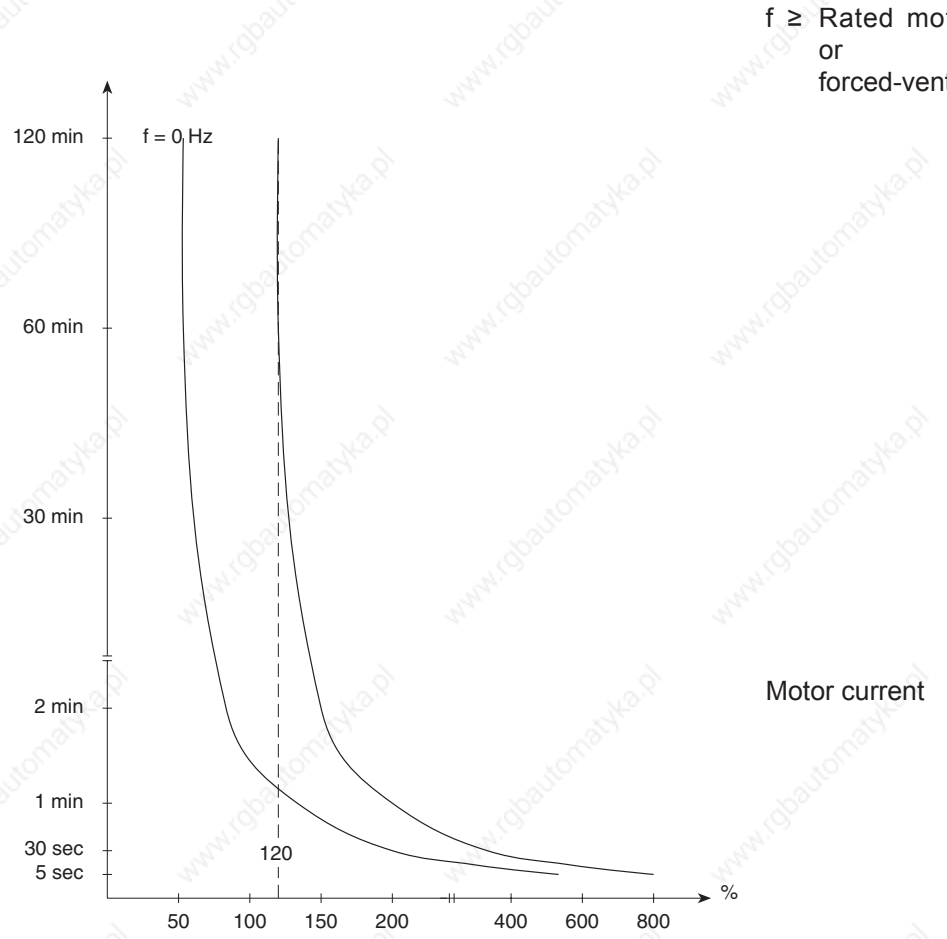

For self-ventilated motors the tripping times decrease with the frequency of the motor (see picture). The motor protective function acts integrating, i.e. times with overload on the motor are added, times with underload are subtracted. After triggering the motor protective function, the new tripping time is reduced to 1/4 of the specified value, if the motor has not been operated for an appropriate time with underload.

Motor protection function for F5-M

In some applications, several motors are operated alternatively on one inverter. The changeover between the motors takes place synchronously with the set changeover.
The motor protection function must then be able to distinguish which of the motors is currently being supplied.

For that purpose there is the parameter Fr.08 "motor set classification". Each motor is assigned a number from 0 to maximally 7, and this value is transferred to the parameter Fr.08 in all sets where the respective motor is supplied.

Example:

3 motors are operated alternately on the inverter.

	assigned number	engaged if the active set (ru.26) is equal to:
Motor 1	0	0, 1, 2, 3
Motor 2	1	4, 5
Motor 3	2	6, 7

The following programming must then be done:

Set 0	Fr.08 = 0	Set 4	Fr.08 = 1	Set 6	Fr.08 = 2
Set 1	Fr.08 = 0	Set 5	Fr.08 = 1	Set 7	Fr.08 = 2
Set 2	Fr.08 = 0				
Set 3	Fr.08 = 0				

The motor protection function is calculated separately for all motors, i.e., for each individual motor, a separate overload counter is running.
If one of the counters reaches the limit of 100%, the behaviour programmed in Pn.14 "motor protection function response" is triggered.

Motor protection function for F5-S

The motor protection function is activated if the ratio apparent current (ru.15) to continuous current (Is/Id) exceeds the value of dr.50 "Motor protection min Is/Id". The release time for this point is set in dr.34 "Motor protection time min Is/Id". In dr.35 "motor protection time at Imax", the release time for maximum current is set. If a greater value is programmed in dr.35 than in dr.34, the time dr.34 is valid in the whole range.

The maximum current is defined by dr.33 "DSM max. torque" or dr.15 "max. torque FI". The smaller of the two values determines the maximum current.

The continuous current is speed-dependent. At speed 0, it is equal to dr.28 "DSM stand still current" and at dr.24 "DSM rated speed", it reaches the value dr.23 "DSM rated current".

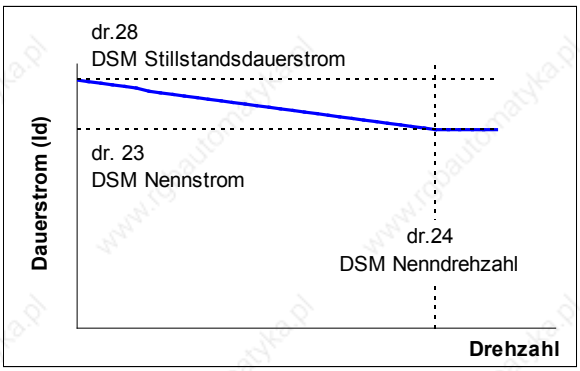

The tripping time is the time, which the internal counter needs, in order to count from 0 to 100% . On reaching 100%, the error "30: ERROR! Motor protection function" (E.dOH) is triggered.

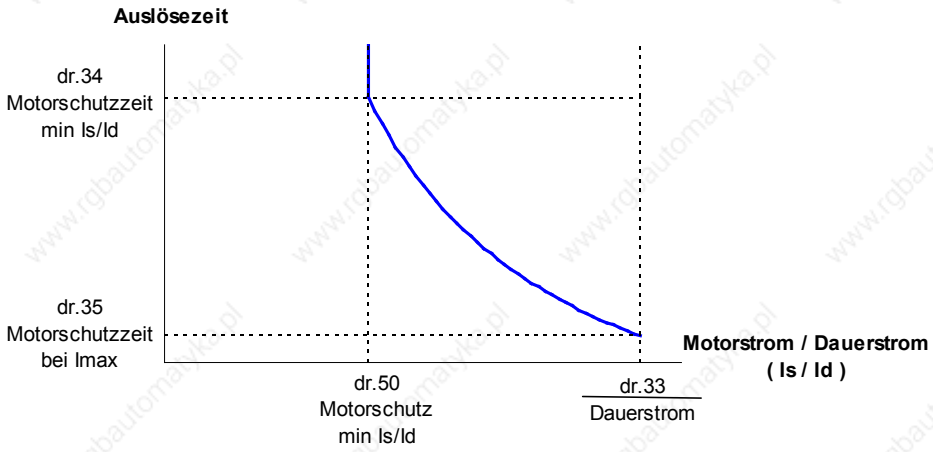

A warning level can be adjusted in Pn.15 "OH2 warning level". If the counter reaches this level, the adjusted response in Pn.14 "Waning OH2 stop. mode" is executed.

The counter is reduced if the relation apparent current to continuous current is < dr.50. The recovery time dr.36 "motor protection recovery time" is the time the counter requires to count from 100% to 0% (after triggering of the error, i.e., when there is no current flow). The error triggered by the motor protection function can already be reset before the recovery time expires.

7.13.10 Power-Off function

It is the task of the Power-Off function to ensure a controlled deceleration of the drive until standstill in case of undervoltage (e.g. due to power failure). The kinetic energy of the rotating drive is used to support the inverter DC-link voltage. As a result the inverter remains in operation and can decelerate the drive in a controlled manner.
Especially in the case of parallel running drives (e.g.textile machines) the uncontrolled running down of the motors and the consequences resulting from it (thread breakage) can be avoided.

For the various operating modes, the amount of available functions differs.
For the vector controlled modes, some parameters have no function or are even hidden.
Here is an overview:

Parameter	V/F-characteristic operation	Vector-controlled DASM	Vector-controlled DSM
Pn.44 Power off mode	yes	yes	yes
Bit 0, 1, 3, 4	yes	yes	yes
bit 2, 8	yes	No function	No function
Bit 6, 7	yes	only values 0 and 192	No function
Pn.45 Power off start voltage	yes	yes	yes
Pn.46 Power off auto st. level	yes	yes	yes
Pn.47 Power off brake torque	yes	No function	hidden
Pn.48 Power off restart level	yes	yes	hidden
Pn.49 Power off start inp. sel.			
Pn.50 Power off ref. DC voltage	yes	No function	hidden
Pn.51 Power off KP DC voltage	yes	yes	hidden
Pn.52 Power off restart delay	yes	yes	yes
Pn.53 Power off KP	yes	No function	hidden
Pn.54 Power off KI	yes	No function	hidden
Pn.55 Power off KD	yes	No function	hidden
Pn.56 Power off jump factor	yes	No function	hidden
Pn.57 Power off KI DC voltage	yes	yes	hidden

Power-Off Mode (Pn.44)

The parameter Power-Off-Mode (Pn.44) switches on the function and determines the basic behaviour:

Pn.44: Power off mode			
Bit	Meaning	Value	Explanation
0	Power off / activation	0: off	Power-off function deactivated
		1: on	Power-off function activated
1	Start voltage	0: automatically	Auto determination of the start voltage
		2: fixed level (Pn.46)	Preset the start voltage with Pn.46
2	Initial jump (only v/f -characteristic)	0: from the slip	Determination of the initial jump from the calculated slip
		4: from the load	Determination of the initial jump from the load factor
3, 4	Behaviour on reaching standstill	0: Mod. on, no restart	Status "78: power-off function active" (POFF), modulation on, reset required
		8: Mod. on, restart	Status "78: Power-off function active" (POFF), modulation on, restart on power recovery after Pn.52 "Power off restart time"
		16: PLS, no restart	Status "84: no direction of rotation after power off" (PLS), modulation off, reset required
		24: reserved	reserved
5	Power off mode	0: act. start voltage (Bit 1)	
		32: dig. input of Pn.49	
6, 7	Voltage setpoint selection (not for vector contr. DSM)	0: starting voltage	Bridging of mains gaps Restart on power recovery, as long as the initial speed is not lower than Pn.48 "Power off restart value".
		64: Voltage setpoint Pn.50 (only v/f-characteristic)	Emergency stop without braking module Restart possible only on reaching standstill.
		128: Voltage setpoint Pn.50, if init.speed < Pn.48 (only v/f-characteristic)	Bridging of mains gaps Restart on power recovery above Pn.48 "power off restart value". Setpoint increase from initial voltage to voltage setpoint below Pn.48.
		192: Braking torque (Pn.47)	Emergency stop with braking module Restart possible only on reaching standstill.
8	Voltage stabilisation on power off (only v/f-char.)	0: on	Voltage stabilization during power off = uF.09
		256: off	Voltage stabilization during power off deactivated

Tripping of Power-Off

The Power-Off function starts when the DC-link voltage drops below a certain value, the start voltage. The start voltage can be set automatically or manually depending on Pn.44 Bit 1.

Starting voltage (Pn.45)

With manual adjustment the starting voltage can be preset with Pn.45 in the range of 200...1200 volt. For a secure range the adjusted starting voltage must be at least 50V over the UP-threshold (UP: 200V class = 216V DC; 400V class = 240V DC; 600V class = 360V DC)

Auto starting voltage (Pn.46)

The auto starting voltage is adjusted with Pn.46 in a range of 50...90% (Default: 80 %) of the rated DC link voltage (ru.68).
The rated DC link voltage is measured on "Power on" and is displayed in ru.68.

Picture 7.13.10.a Starting the Power-Off function

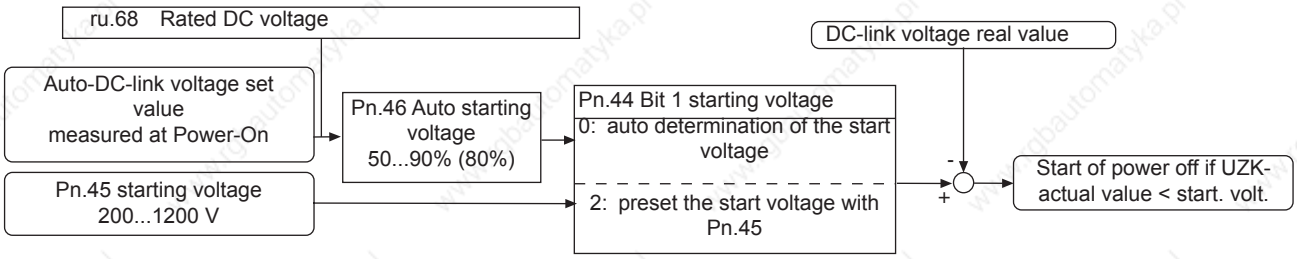

Initial jump for generator operation (only v/f-characteristic operation)

First of all the drive must be brought into generatoric operation to enable the feed back of energy into the intermediate circuit. This is achieved by making a frequency jump, so that the speed of the drive is larger than the output rotating field speed of the inverter .

Figure 7.13.10.b Initial jump for generator operation in 1. cycle

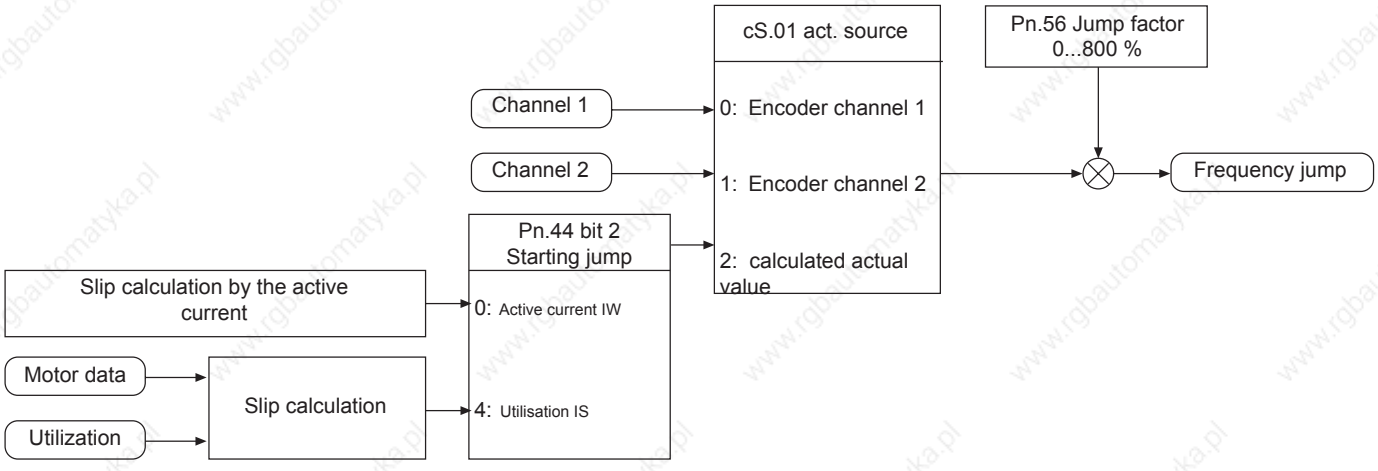

Initial jump calculation (Pn.44 Bit 2)

The parameter Pn.44 bit 2 determines, whether the starting jump is calculated from the active current or from the utilisation. This setting has no effect on slip regulation. Default value is the calculation of the active current, but in the case of high harmonic content of the output current it can lead to false values. In that case the starting jump must be determined from the utilisation. To get proper values enter motor data into dr-parameters first.

Jump factor (Pn.56)

By means of the jump factor the automatically determined starting jump can be adapted to the respective application.
In case the jump factor is too small, the inverter trips to "2 ERROR! Undervoltage" (E.UP)!
For too great a jump factor, the inverter runs into the hardware current limitation (status value 80 "HCL"). The control cannot work correctly, thus causing a wrong calculation of the active current!

Power off controller (not for vector controlled operation with DSM)

There are two controllers: the DC-link voltage controller and the active current controller.
In v/f-characteristic operation the active current controller is subsequently connected to the DC link voltage controller.
In vector controlled operation, the output of the DC link voltage controller is used as the torque limit.
If the braking torque is selected as the setpoint (Pn.44 bit 6...7 = 3), the DC link voltage controller is deactivated.

setpoint = start voltage (Pn.44 Bit 6...7 = 0)

The initial voltage value selected with Pn.44 bit 1 is the setpoint of the DC link voltage controller (see also: tripping of Power-Off
This setting serves to bridge voltage drops. On power recovery, the drive restarts if the initial speed has not yet fallen below the "power off restart value" (Pn.48).

Setpoint = braking torque (Pn.47; Pn.44 Bit 6...7 = 3) (only v/f characteristic operation)

The braking torque can be preset within the range of 0,0...100,0 %.

The braking torque is used as setpoint value source, if the drive must be stopped as fast as possible in case of power failure. The DC link voltage controller is switched off in this case. Since the DC link voltage increases very strongly in this mode, a braking module is required.

Since the hardware current limit should not be reached with active current control, the setpoint value is limited internally which can lead to oscillations. In that case the setpoint value can be reduced, which leads to prolongation of the delay. If the voltage stabilization is switched on (Pn.44 bit 8 = "1") and uf.09 = rated voltage is adjusted, the voltage is not so high and the deceleration becomes more uniform.

Setpoint = voltage setpoint (Pn.50; Pn.44 Bit 6...7 = 1 or 2) (only v/f characteristic operation)

The setpoint DC-link voltage can be preset in the range of 200...1200 V. To ensure a safe operation the internal value is limited down. The value of the DC-link voltage in normal operation plus approx. 50V adjusts itself as minimum value. If a braking resistor is connected, the adjusted value may not lie above the threshold of the braking resistor, else the controller cannot work (threshold 200V-class: 380V; 400V-class: 740V; 600V-class: 1140V).

If Pn.44 Bit 6...7 = 1, the voltage setpoint is used as setpoint immediately after the triggering of power off. In this mode, a restart is possible only after reaching standstill.

In mode Pn.44 Bit 6...7 = 2, initial voltage is adjusted to first after triggering. On undershooting the restart value (Pn.48), the setpoint is increased to the voltage setpoint (Pn.50) with a ramp. This achieves that the drive still has enough energy for braking when reaching standstill in critical applications.

KP DC link voltage controller (Pn.51), KI DC link voltage controller (Pn.57)

To be able to adapt the drive individually to the application, the proportional factor of the DC link voltage controller can be adjusted with Pn.51 and the integer factor with Pn.57, in the range of 0...32767. In most cases the default setting will achieve sufficient results. If, however, overshoots or fall backs of the motor occur, the values must be lowered.

KP (Pn.53), KI (Pn.54), KD (Pn.55) (only V/F characteristic operation)

Pn.53, Pn.54 and Pn.55 are the controller parameters of the active current controller
A D-part usually has a positive effect on control. Pn.55 should have approx. 10-times the value of Pn.53.

Behaviour on power recovery and below the restart value (Pn.48)

The following parameters effect the behaviour of the inverter if the system voltage returns during the Power-Off-function.

Restart value (Pn.48)

Depending on the individual case, it can be reasonable to execute the restart on power recovery only above a defined base value. This restart value is adjusted in Pn.48.
Dependent on the setpoint value source (Pn.44 bit 6 ..7) following conditions occur:

1. Control to the starting voltage (Pn.44 Bit 6...7 = 0):
If the output value is larger than the restart value, the restart is carried out upon power recovery. The output value is kept constant during the restart delay (Pn.52). Afterwards it is accelerated to the current setpoint value. Below the restart value it is delayed in case of power recovery with the fast-stop-function (DEC ramp at F5-B/C). If the power does not recover, the controller parameters of the active current controller are decreased linearly with the base value in v/f-characteristic operation.

2. Control to voltage setpoint Pn.50 for a base value smaller than the restart value (Pn.44 bit 6...7 = 2):
As long as the base value is greater than the restart value, the inverter behaves as in item 1. Below the restart value the voltage setpoint value of Pn.50 is increased and with active current control (without speed detection) the control parameters of the active current control are reduced linearly with the output value. On power recovery, a restart is then only possible after reaching standstill.

3. Control to voltage setpoint Pn.50 or braking torque Pn.47 (Pn.44 bit 6.,.7 = 1 or 3):
The control parameters of the active current control (without speed detection) are reduced below the restart value linearly with the output value.
On power recovery, a restart is possible only after reaching standstill.

Behaviour on reaching standstill (Pn.44 Bit 3.,.4)

Pn.44 bit 3..4 determines how the drive behaves on reaching standstill.

Pn.44 bit 3...4 = 0:
The inverter modulates independent of a set direction or rotation with the adjusted boost and is in status "78: power off function active" (POFF). Attention: Motor warming! A reset is necessary for the restart.

Pn.44 bit 3...4 = 1:
The inverter modulates independent of a set direction or rotation with the adjusted boost and is in status "78: power off function active" (POFF). After expiration of the restart delay Pn.52 (if adjusted) the inverter restarts automatically.
Pn.44 bit 3...4 = 2:
The inverter switches off the modulation and is in status "84: no direction of rotation after power off" (PLS). A reset is necessary for the restart.

Restart delay (Pn.52)

If a restart is allowed the restart delay time is kept constant after power recovery of the output value. It is adjustable within the range of 0...100 s (Default 0 s). After expiration of this time it is accelerated again onto the current setpoint.

Power off start inp.sel. (Pn.49)

Only hardware inputs can be adjusted with this parameter, since these inputs are scanned in the same cycle where the power off control is active. A setting via the control word or di.01/02 is not possible.

Examples of the power off-operating modes

To better illustrate the context, the operating modes are explained in more detail in the following section.

Bridging of mains gaps (not for vector controlled operation with DSM)
Setpoint source: Starting voltage (Pn.44 bit 6..7 = 0)
Voltage setpoint Pn.50, if base value < Pn.48 (Pn.44 bit 6..7 = 2)

In this mode the motor shall be operated almost in no-load operation and only recover the energy which the inverter requires for the operation. The starting voltage is at the same time the setpoint value for the DC-link voltage control. In v/f-characteristic operation, the set value is the setpoint of the active current controller, and in vector controlled operation, the torque limit of the speed controller.
In case of weak supply systems it is recommended to choose the automatic starting voltage, as in this case the starting voltage value is adapted to slow voltage fluctuations.
In the first cycle, a speed jump is issued in v/f-characteristic operation, and in vector controlled operation, the limit of the speed controller is set to the measured slip so that the drive is put in no-load operation.
To safely decelerate the drive in v/f-characteristic operation, the controller parameters of the active current controller are lowered to below of the restart value, linearly with the base value.

Restart at power recovery
Only in this mode the system recovery can be constantly detected. An immediate restart upon power recovery is possible.

After detecting the power recovery the restart delay (Pn.52) runs down and the drive accelerates to the current setpoint value.

An immediate restart is not executed below the restart value (Pn.48). The drive decelerates with the quick stop function (Pn.60..61) and behaves according to the adjustment in Pn.44 bit 3...4.

To have more energy available for braking the inertia mass on reaching standstill in v/f-characteristic operation, the voltage setpoint for undershooting the restart value (Pn.48) can be increased to the voltage setpoint (Pn.50) (Pn.44 Bit 6...7 = 2).
In this case the control remains active with the increased setpoint value. Then a restart is possible only after reaching standstill. Thereafter, the behaviour is define by Pn.44 Bit 3...4.
In this mode, too, the lowering of the controller parameter is executed.

Emergency stop with braking module (not for vector controlled with DSM)
Setpoint source: Brake torque (Pn.44 bit 6...7 = 3)

In this mode the drive is to be stopped as fast as possible. Since the fed back energy can be very high, a braking resistor is necessary.
The DC-link voltage controller is not active. In v/f-characteristic operation, the setpoint of the active current controller is the braking torque (Pn.47). In vector controlled operation, the drive decelerates with the abnormal stopping-function (Pn.60, 61, 67; see chapter 7.13.5) and behaves dependent on the setting in Pn.44 Bit 3...4.
The drive supplies no energy anymore at low speed in v/f-characteristic operation. In this case, the control must be very soft, to prevent fall back.
It is possible to adjust the restart (Pn.48). The controller parameters of the active current controller are lowered to below this value, linearly with the base value.

Emergency stop without braking module (only V/F characteristic operation)
Setpoint source: voltage setpoint Pn.50 (Pn.44 Bit 6...7 = 1)

In some cases one can do without a braking module with the Emergency-stop function, if the losses in the motor are very high at high DC-link voltage.
The voltage stabilization should be switched off in this case. This can be done with Pn.44 Bit 8 = 1 during Power-Off.
The DC-link voltage control is active. Deceleration is always to standstill. Accordingly the performance results from the adjustment of Pn.44 bit 3...4.
At small speeds the drive supplies no more energy. In this case, the control must be very soft, to prevent fall back.
It is possible to adjust the restart (Pn.48). The controller parameters of the active current controller are lowered to below this value, linearly with the base value.

Power off in vector controlled operation with DSM

In this operating mode, only the emergency stop-function with braking module can be activated. After triggering of power off, the drive decelerates with the abnormal stopping-function (Pn.60, 61; see chapter 7.13.5) and behaves dependent on the setting in Pn.44 Bit 3...4.

7.13.11 GTR7-Control

The braking transistor (GTR7) serves to control a braking resistor.
In the factory setting, the GTR7 is operated dependent on the DC link voltage to discharge recovered energy. Here, the GTR7 is active only if the converter (the modulation), too, is enabled.
With the parameters Pn.64 "GTR7 input selection", Pn.65 "special functions" and Pn.69 "GTR7 DC link voltage level", the switching performance of the GTR7 can be modified.

7.13.11.1 Activation via digital input

With Pn.64 an input can be defined for the activation of the GTR7. Thereby, the activation of the braking transistors of all inverters in a DC interconnection of several drives can be synchronised and the generated braking energy thereby be distributed over all inverters.
The GTR7 controls the braking resistor, in this case, independent of the inverter state and the DC link voltage, as soon as the input is active.
Exception: On opening the control release (noP), the GTR7 is always switched off for safety reasons.
I.e., as soon as a digital input is selected for activation of the braking transistor, the adjustments in Pn.65 concerning the GTR7 and the parameter Pn.69 are without function.

7.13.11.2 Adjustment of the activation threshold

With Pn.69 "GTR7 DC link voltage level", the DC link voltage level at which the braking transistor becomes active can be adjusted.
The settings range is 300..1500V. This value is limited downwards internal to the inverter: the braking transistor becomes active no earlier than ru.68 "DC link voltage rated value" * 1.0625.
The DC link voltage rated value is the DC link voltage measured at "Power on".

7.13.11.3 Activation conditions

In the factory settings, the braking transistor is only active if the modulation is also enabled.
The reason for it is that for "standard" asynchronous motors, the recovery of energy into the inverter also ends with shutdown of the modulation.
When using synchronous machines in the field weakening range, or using sine filters at the inverter output, recovery may continue despite the modulation being switched off.
In that case, Pn.65 should be changed.

Pn.65 Special functions		
Bit	Meaning	Explanation
0	1: GTR7 function for LS	GTR7 function also available in status "70: standstill (Modulation off)" (LS)
3	8: GTR7 release on error	GTR7 function also available if the inverter is in an error state. Exception: On opening of the hardware control release (terminal X2A.16) and for an unpowered power circuit (status 13: power circuit not ready), the GTR7 is always switched off.
5	32: GTR7 function for SW nop	The terminal ST causes an immediate hardware switch-off of the braking transistor. If the GTR7 function shall be available also in status "0: no control release“ (nop), the software control release must be used (can be activated via di.36). The GTR7 can then be activated for the status "no control release" with bit 5. Exception: On opening the hardware control release (terminal X2A.16), the GTR7 is always switched off.

In which cases the braking transistor remains active even if modulation is switched off depends of the specific application.

7.13.12 Special functions

In these parameters, many different functions for adapting the inverter behaviour to special applications are pooled.

Pn.65 Special functions		
Bit	Meaning	Explanation
0	1: GTR7 function for LS	GTR7 function also available in status "70: standstill (Modulation off)" (LS) *1
1	2: Pn.04 = E.UP	With the selected input in Pn.04 „ext. fault input select“, „Error! Undervoltage" is triggered (not „Error! external input“)! This can achieve that, for coupled drives, all inverters simultaneously go to undervoltage as soon as there is a voltage dip on one of the inverters, and all inverters also execute an automatic restart simultaneously when the mains voltage returns to the valid range on all inverters. The undervoltage error from the DC link voltage measurement remains active.
2	4: Behaviour if LT not ready	The status "13: Power circuit not ready" (nO_PU), which the inverter enters for an unpowered power circuit, is not treated as an error. That means, the switching conditions 4..6 are not met and the bit 1 in status word "Error" is not set.
3	8: GTR7 release on error	GTR7 function also available if the inverter is in an error state. Exception: On opening of the hardware control release (terminal X2A.16) and for an unpowered power circuit (status 13: power circuit not ready), the GTR7 is always switched off. *1
4	16: OL2 temperature-dependent	On activation of this bit, the current limit for the overload protection in the lower speed range (OL2-function) is dependent on the heat sink temperature
5	32: GTR7 function for SW nop	The terminal ST causes an immediate hardware switch-off of the GTR7. If the GTR7 function shall be available also in status "0: no control release“ (nop), the software control release must be used (can be activated via di.36).Then the GTR7 can be activated with bit 5 for the status "no control release". Exception: On opening the hardware control release (terminal X2A.16), the GTR7 is always switched off. *1
6	64: OL2 Derating limiting	For switching frequencies above the rated switching frequency, the current limit for the overload protection in the lower speed range is reduced. On activation of this bit, the inverter reduces the switching frequency to the rated switching frequency to prevent the error "Overload in standstill" (E.OL2).
7	128: E.UP = no error on nop+LS	The status "2: ERROR! undervoltage" (E.UP) is not treated as an error if the rotation setting or the control release is missing. That means, the switching conditions 4..6 are not met and the bit 1 in status word "Error" is not set.
8	256: BBL is not displayed	The status "76: motor de-excitation" (bbL) is not displayed anymore. Advantage: the cause of the switch-off of the modulation (e.g., error) is visible immediately in ru.00 and can be evaluated by an external control. Disadvantage: Since a reset of an error is only possible after expiration of the base-block time, it is not apparent without display when a reset can be executed.
9	512: Status termination = RUN	The bit 2 in SY.51 "status word (low) normally shows "Start" if the modulation is switched on. Exception: If a positioning is aborted via the bit 11 "Termination" in the control word, then the status word displays "Stop" as soon as the drive reaches speed 0 (even if modulation is still active). This exception can be revoked by activation of bit 9.
10	1024: A.XX = error	If this bit is active, the ERROR-bit in status word SY.51 and the switching condition that responds to an error are set in case of a malfunction (Status warning / A.XX).

further on next side

Pn.65 Special functions		
Bit	Meaning	Explanation
11	2048: no dig. ST = no E.Bus	the two watchdogs (for operator interface and HSP5) are deactivated by the input programmed in di.39 "Shutdown ST input selection". *2
12	4096: Error reset at 0	A malfunction or error reset is permitted only when the amount of the actual value (ru.07) is smaller than the operating hysteresis(LE.16). This applies also to the automatic restart.
13	8192: Actual value = setpoint at mod. off	The comparison ru.07 "Actual value display" = ru.01 "Setpoint display“ (for status word and condition "constant run“) is continuously executed, even for switched off modulation and during the "speed search“. This affects the status word, the timer start and reset conditions, and the switching condition 20.

*1 to bit 0, 3, 5: With the GTR7 (braking transistor), a braking resistor can be connected to the DC link that absorbs recovered energy when the motor is working as a generator.
By default, the GTR7 is off when the modulation is switched off.
For some applications (e.g., synchronous motor operated in the field weakening range) it is sensible to leave the GTR7 active for switched off modulation, so that the braking resistor can be added when the DC link voltage exceeds the value of Pn.69 "GTR7 DC link voltage level".
By setting this bit, the GTR7 function is available for the respective inverter state.

*2 to bit 11: If a drive is controlled via a bus system, and the control release is furthermore switched via the control word, the two watchdogs (Operator watchdog and HSP5 watchdog) should be activated so that the drive is stopped on failure of the bus system. However, the drive can then not be repositioned by hand anymore, since – as long as the bus is down - the malfunction- or error message of the watchdog remains in force.
With parameter di.39 "Shutdown ST input selection", an input can already be selected with which the digital setting of the control release (i.e., setting via di - parameter or the control word) can be deactivated. With that, only the terminal ST (X2A.16) is operative, and the regulation of the control release can again occur via the digital input alone.
If this bit is set, the two watchdogs are also deactivated with the selected (in di.39) input.
If a response with automatic restart is now selected for the watchdog error, the malfunction automatically resets and the drive can be used in manual operation.

1. Introduction	
2. Summary	
3. Hardware	
4. Operation	
5. Selection of Operating Mode	
6. Initial Start-up	
7. Functions	7.1 Operating and appliance date
	7.2 Analog in- and outputs I
	7.3 Digital in- and outputs
	7.4 Setpoint-, rotation- and ramp adjustment
	7.5 Motor data and controller adjustments of the asynchronous motor
	7.6 Motor data and controller adjustments of the synchronous motor
	7.7 Speed control
	7.8 Torque display and -limiting
	7.9 Torque control
	7.10 Current control, -limiting and switching frequencies
	7.11 Speed measurement
	7.12 Positioning and synchronous control
	7.13 Protective functions
	7.14 Parameter sets
	7.15 Special functions
	7.16 CP-Parameter definition
8. Error Assistance	
9. Project Design	
10. Networks	
11. Parameter Overview	
12. Annex	

7.14.1 Non-programmable parameters....7.14-3
7.14.2 Security parameters....7.14-3
7.14.3 System Parameters....7.14-3
7.14.4 Indirect and direct set-addressing....7.14-4
7.14.5 Copying of parameter sets via keyboard (Fr.01)....7.14-4
7.14.6 Copying of parameter sets via bus (Fr.01, Fr.09)....7.14-5
7.14.7 Parameter set selection....7.14-8
7.14.8 Locking of parameter sets....7.14-12
7.14.9 Parameter set ON/OFF delay (Fr.05, Fr.06)....7.14-13

7.14 Parameter sets

The KEB COMBIVERT contains 8 parameter sets (0...7), i.e. all programmable parameters are available 8 times in the inverter and independent of each other they can be assigned with different values. As a lot of parameters in the parameter sets contain the same value, it would be relatively complicated to change every parameter in each set individually. In this section it is described, how one copies whole parameter sets, locks them, selects them and reinitializes the inverter.

7.14.1 Non-programmable parameters

Certain parameters are not set-programmable, as their value must be the same in all sets (e.g. bus address or baud rate). For an easy identification of these parameters the parameter set number is missing in the parameter identification.

For all non-programmable parameters the same value is valid independent of the selected parameter set!

Following parameters are non-programmable:

SY Parameters	Pn.00...18/ 23/ 27/ 29/ 42/ 44...60/ 62...66/ 68/ 69/ 74…81
ru parameters	uF.08/ 12...15/ 18 (uF.09 at F5-S)/ 18…23
Ec parameters	ud.01...17/ ud.22…31 (all at F5-S)
AA parameters	Fr.02...04/ 07/ 09/ 11 (Fr.10 at F5-S)
di parameters	An.00...04/ 10...14/ 20...24/ 41...56
In parameters (exception: In.25)	LE.16-27
dr parameters (not at F5-S)	cn.03/ 11...13
oP.19/ 20/ 50/ 53...58/ 60…63/ 65…68/ 74	dS.00...01 (only F5-S)
	PS.02...04/ 10...27/ 29...31

7.14.2 Security parameters

The security parameters contain the Baud rate, inverter address, hours/meter, control type, serial-/customer number, trimming values and error diagnosis. They are not overwritten while copying parameter sets from the default set.

SY.02/ 03/ 06/ 07/ 11
ru.40/ 41
ud.01/ 02
Fr.01
In.10...16/ 24...31

7.14.3 System Parameters

The system parameters contain the motor and encoder data.

dr parameters	Pn.61/ 67
cS.00...19...22	dS.00...01/ 13
Ec.01...07/ 11-27/ 36...38	Fr.10

7.14.4 Indirect and direct set-addressing

During indirect set addressing the parameter values are indicated and edited to the adjustment of the set indicator (Fr.09). The direct set addressing enables the display or writing of a parameter value independent of the set indicator directly into one or several parameter sets. The direct set programming is only possible with bus operation.

7.14.5 Copying of parameter sets via keyboard (Fr.01)

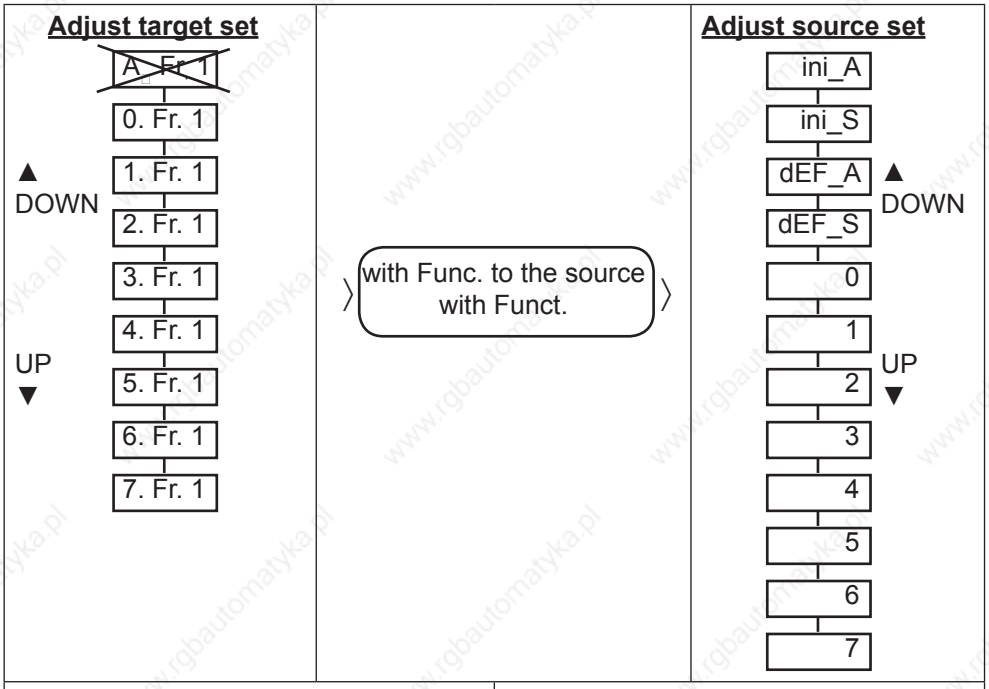

With the keys UP/Down and at flashing point the target set 0...7 is adjusted in addition to the parameter set number. The active (A) parameter set must not be adjusted as target set while copying. If the target set is > 0, only the programmable parameters are overwritten!	The source set is adjusted with the keys UP/Down. The copying process is started with „Enter“. Copying is only possible with opened control release or error, otherwise „I_oPE“ appears in the display (invalid operation). After copying „PASS“ appears in the display and could be erase by „ENTER“.

7.14.6 Copying of parameter sets via bus (Fr.01, Fr.09)

In case of indirect set addressing at Bus operation two parameters are responsible for the copying of parameter sets. Fr.09 defines the target set. Fr.01 defines the source parameter set and starts the copying process. In the case of direct set programming the source set (Fr. 01) is copied into the selected parameter sets. The following copying actions can be practised:

Target set Fr.09	Source set Fr.01	Action
0...7	0...7	All programmable parameters (System parameters too) of the source set are copied into the target set.
0	-1: dEF_S	Default values are copied into all parameters of set 0 (with exception of System and Security parameters).
1...7	-1: dEF_S	Default values are copied into all programmable parameters of the target set (with the exception of System and Security parameters).
All	-2: dEF_A	Default values are copied into all parameters of all sets (with the exception of System and Security parameters).
0	-3: ini_S	Default values are copied into all parameters of set 0 (with the exception of Security parameters).
1...7	-3: ini_S	Default values are copied into all programmable parameters of the target set (with the exception of Security parameters).
All	-4: ini_A	Default values are copied into all parameters of all sets (with the exception of Security parameters).

By loading the factory setting all definitions defined by the mechanical engineer are reset! This can comprise the terminal assignment, set changeover or operating states. Before loading the default set it is to be ensured that no unintended operating states occur.

Custom-specific default values

Value Fr.01	Source default values	Copied parameters	Target sets
-1	KEB	Customer parameters	selected
-2	KEB	Customer parameters	all
-3	KEB	Customer and system parameters	selected
-4	KEB	Customer and system parameters	all
-5	custom-specific	Customer parameters	selected
-6	custom-specific	Customer parameters	all
-7	custom-specific	Customer and system parameters	selected
-8	custom-specific	Customer and system parameters	all
-9	Storing of the current parameter setting as custom-specific default values.	Customer and system parameters	all

The values -5 to -8 are corresponding to the previous values -1 to -4 referring to the copied parameters and target sets. They differ only in the default value source.
Value -9 enables storing of the current parameter setting as custom-specific default values. The values of all customer and system parameters are stored in all sets thereby.

Parameters only with KEB-Default value

Bit 27 is set in characteristics 2 for parameters, which contains only the KEB default value. These are among others all security parameters and all write protected parameters.
During loading the specific default values (fr.01 = -5..-8) these parameters are loaded with KEB default values if necessary.

Indirect addressed Parameters

The indicator parameter (first parameter of an indirect addressed group) has not a customer default value, because the parameter was set to 0 with Power-On-Reset. The parameters belonging to the group have a default value for each value of the indicator.

Storing the custom-specific default values

A source table is generated. For this one byte is reserved for each parameter in the sequence of the bus addresses. This byte contains the information for each set, whether the default value is determined from the parameter definition (= 0, KEB default value) or if the value is stored in the custom-specific storage area (= 1). This information is determined by comparison to the KEB default value.
For indirect addressed parameters the number of reserved bytes for each group member is equal to the number of valid values of the indicator. 36 byte are reserved for ud.16 and ud.17, ud.15 = 1...36. 16 byte are reserved for ps.24...27, ps.23 = 0...15. The custom-specific default values are stored in the sequence of the bus addresses (ascending) set depending (set 7..0).
The custom-specific default values for indirect addressed parameters are stored first to bus address (ascending), then to indicator value (max. ... min.), then set-dependent (set 7..0).

Example: Default value ud.09, default values ud.16 for ud.15 = 36..1, default values ud.17 for ud.15 = 36..1, default values ud.18 for set 7..0, etc.

Copy custom-specific default values in the sets

With the bits in the source table the default value for each set is determined either from the parameter definition for each parameter in the sequence of the bus address or read-out from the custom-specific memory area and written into the parameter.
Parameters only with KEB default value are loaded with the KEB default value in this case.

Reset of the custom-specific default values

The default values are reset for all parameters to KEB default values in the following cases:

- All parameters are set to default values (initial loading)
- The version identification of the software changes (new version, or new date code)
- The control type is changed (ud.02 bit 2+3)

The custom-specific default values can be reset manually as follows:

- Loading KEB default values in all sets (fr.01 = -4)
- Storing defaul values (fr.01 = -9)

Changed power unit or encoder identifier, changeover standard/US setting

The power unit identification was changed:

- The power unit identifiction dependent KEB default values are adapted.
- If necessary uf.11 is limited in all sets to the maximal switching frequency (in.03).
- If a custom-specific default value of uf.11 is not within the value range (0..in.03)uF.11 is loaded during default value loading in the corresponding set with the KEB default value.
- If the write value of SY.03 is unequal to the reading power unit identification, all customer and system parameters are loaded with KEB default values (corresponding Fr.01 = -4).

The encoder identifier was changed:

- The encoder identifier dependent KEB default values are adapted.
- EC-Parameters are loaded with KEB default values.
- Changeover standard/US setting (change in.21 bit 0 at in.20 = 32):
- The KEB default values depending on this setting are adapted.
- Customer and system parameters are loaded with KEB default values (corresponding to Fr.01 = -4).

Memory management

The length of the source table (in byte) and the length of the memory area of the customer default values (in byte) are stored in one word at the end of the external RAM.
The source table for the custom-specific default value range is in front of these two cells. The length is dependent on the number of permitted parameters of the adjusted control type (ud.02 bit 2+3)
The memory area for the custom-specific default values starts next to the source table. The length is dependent on the number of values stored here. Only the values which are different to the KEB default values are stored. The default values are stored in descending order of memory addresses.
The off-line memory includes the period between the temporary variables and the memory area for the custom-specific default values. The size of the off-line memory is depending on the number of custom-specific default values.

Complete use of the available memory

Fr.01 = -10 (customer default memory is full) is set if the memory area is completely filled with custom-specific default values, all values could not be stored.
That means only one part of the parameter setting (with low bus addresses) contain custom-specific default values, further settings only contain KEB default values.
This restriction should not occur since enough memory is available.

7.14.7 Parameter set selection

Figure 7.14.7 Principle of the parameter set selection

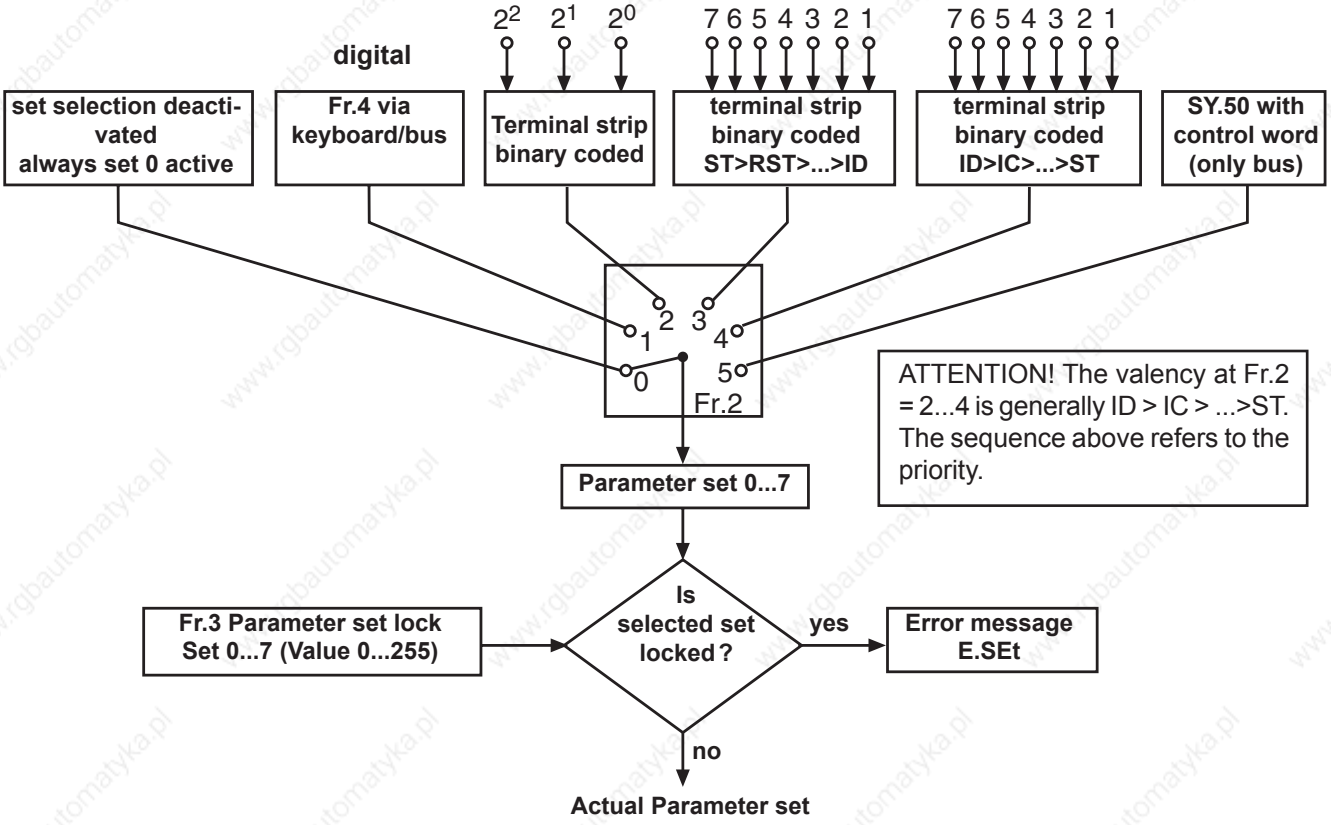

Fr.02 Source parameter set

As shown in Fig. 7.14.7, with Fr.02 it is defined whether the parameter set selection is enabled or disabled via keyboard/Bus (Fr.04), the terminal strip or via control word (SY.50). The selection is activated with „Enter".

Fr.02: Parameter set source	
Value	Function
0	Set selection deactivated; set 0 always active
1	Set selection via keyboard/bus with Fr.4
2	Set selection binary-coded via terminal strip
3	Set selection input-coded via terminal strip Priority: ST>RST>R>F>I1>I2>I3>I4>IA>IB>IC>ID
4	Set selection input-coded via terminal strip Priority: ID>IC>IB>IA>I4>I3>I2>I1>R>F>RST>ST
5	Set selection via control word SY.50

Fr.04 Parameter set setting

This parameter can be written by bus as well as by keyboard. The desired parameter set (0...7) is preadjusted directly as value and activated with „Enter“.

Fr.07 Parameter set input selection

The adjustment via terminal strip can be made binary-coded or input-coded. The inputs are defined with parameter Fr.07. With binary-coded set selection maximally 3 inputs should be programmed to set selection to avoid set selection errors.

Fr.10: Load mot. dependent parameter			
Bit	Value	Input	Terminal
0	1 [1)]	ST (prog. input „control release/reset“)	X2A.16
1	2	RST (prog. input „reset“)	X2A.17
2	4	F (prog. input „forward“)	X2A.14
3	8	R (prog. input „reverse“)	X2A.15
4	16	I1 (prog. input 1)	X2A.10
5	32	I2 prog. input 2)	X2A.11
6	64	I3 (prog. input 3)	X2A.12
7	128	I4 (prog. input 4)	X2A.13
8	256	IA (internal input A)	no
9	512	IB (internal input B)	no
10	1024	IC (internal input C)	no
11	2048	ID (internal input D)	no

[1)] The input ST is occupied by hardware means with the function „Control release“. Further functions can be adjusted only „additionally“.

Example

For input-coded set selection (Fr.02=3) I1, I2 and F are defined for set selection.In this case F = set1; I1 = set2 and I2 = set3 would be acticated as the valence is (I2>I1>F). If I1 and I2 are triggered simulateously the inverter switches into set2 since the priority is F>I1>I2 at Fr.02=3.

Binary-coded set selection

With binary-coded set selection

- maximally three of the internal or external inputs may be programmed to set selection (2^3=8 sets) to avoid set selection errors.
- the valence of the inputs programmed for set selection rises (ID>IC>IB>IA>I4>I3>I2>I1>R>F>RST>ST)

Example 1: With 3 inputs (F, I1 and I4) set 0...7 shall be selected

1.) Adjust parameter Fr. 07 to value „148“
2.) Adjust Fr.02 to value „2“ (set selection binary-coded via terminal strip)

I4	I1	F	Input
2^2	2^1	2^0	set
0	0	0	0
0	0	1	1
0	2	0	2
0	2	1	3
4	0	0	4
4	0	1	5
4	2	0	6
4	2	1	7

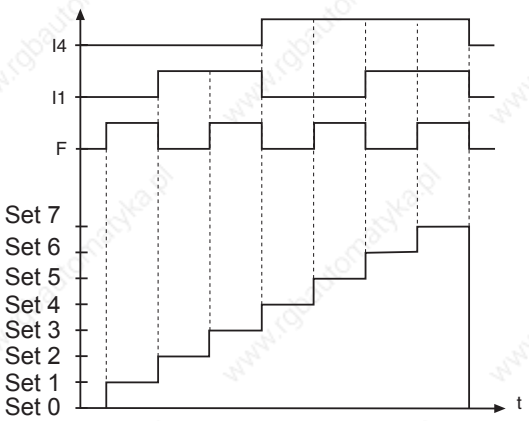

Input-coded set selection

With input-coded set selection

- maximally 7 of the internal or external inputs may be programmed to set selection (0...7 sets) to avoid set selection errors.
- the lowest of the selected inputs has priority at Fr.02 = „3“
  (ST>RST>R>F>I1>I2>I3>I4>IA>IB>IC>ID)
- the highest of the selected inputs has priority at Fr.02 = „4“
  (ID>IC>IB>IA>I4>I3>I2>I1>R>F>RST>ST)

Example 1: With 5 inputs (I1, I2, I4, IB and ID) set 0...5 shall be selected.

1.) Adjust parameter Fr. 07 to value „2736“
2.) Adjust Fr.02 to value „3“ (set selection input-coded via terminal strip)

Id	IB	I4	I2	I1	set	set
				Fr.02 =	3	4
0	0	0	0	0	0	0
0	0	0	0	1	1	1
0	0	0	2	0	2	2
0	0	3	0	0	3	3
0	4	0	0	0	4	4
5	0	0	0	0	5	5
5	0	3	0	0	3	5
5	0	3	0	1	1	5

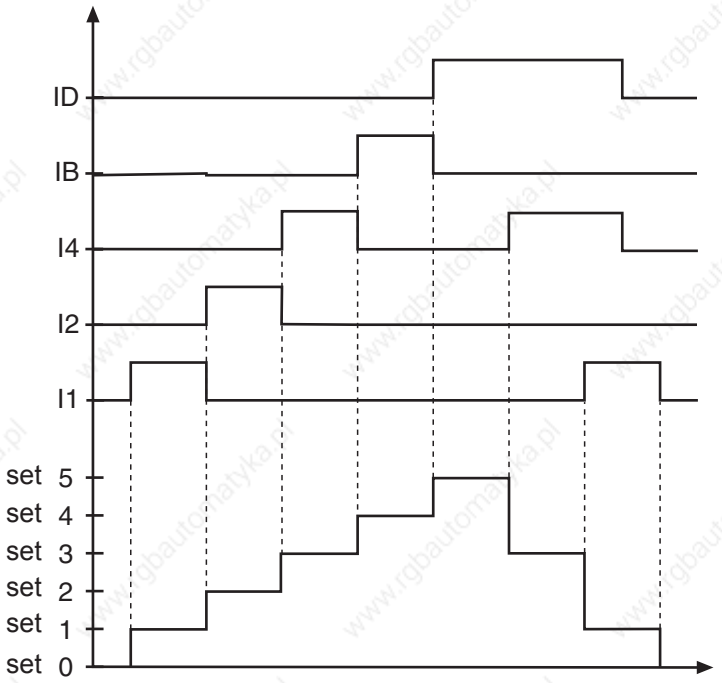

Reset set input selection (fr.11)

The parameter Fr.11 defines an input, with which one can switch independently of the current parameter set in to parameter set 0. This function is only active at Fr.02 = 0...4.

- with static input assignment the inverter remains in set 0 as long as the input is set.
- with edge-triggered inputs set 0 is always activated with the 1st edge. With the 2 nd edge the set activated by the other inputs is selected again.

Set change mode modulation on (Fr.12)

Parameter Fr.12 adjusts the behavior at set change. A motor set change without parameter set changes is only possible when the modulation is switched off.
If the set change is disabled and the modulation is switched on, then a planned set change releases the errror ‘set selection error‘ (E.SET, A.SET). The set change is done, as soon as the modulation is switched off.

Fr.12: Set change mode mod. on		
Bit	Meaning	Value
0	Set change mode	0: enable / 1: inhibited
1	Mode motor set change	0: enable / 1: inhibited

Bit 1 has no function at F5-S, since only one motor set is available here.

7.14.8 Locking of parameter sets

Fr.03 Parameter set lock

Parameter sets, that shall not and must not be selected, can be locked with Fr.03. If one of the locked sets is selected, the adjusted response in Pn.18 is executed (default: set selection error (E.SEt).

Value	Locked set	Example (set 2 and 5 inhibited)
1	0	-
2	1	-
4	2	4
8	3	-
16	4	-
32	5	32
64	6	-
128	7	-
		Sum 36

7.14.9 Parameter set ON/OFF delay (Fr.05, Fr.06)

With these parameters the time is adjusted,

- with which the activation of a new set is delayed (Fr.05)
- with which the deactivation of an old set is delayed (Fr.06)

In the case of set changeover the OFF time of the old set and ON time of the new set are added up.

Picture 7.14.9 On and off delay

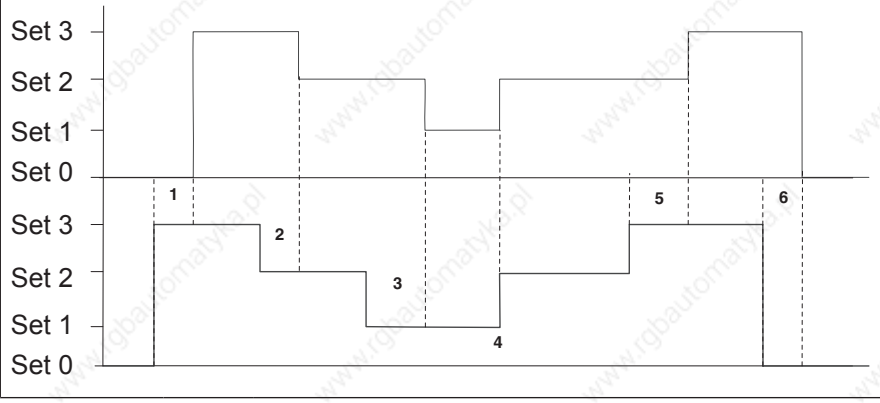

Example				1:	ON delay for set 3 of 2s
	on	off		2:	OFF delay for set 3 of 2s
set	Fr.5	Fr.6		3:	OFF delay for set 2 of 1s +
0	0s	0s			ON delay for set 1 of 2 s
1	2s	0s		4:	immediate changeover as no delay is adjusted
2	0s	1 s		5:	OFF delay for set 2 of 1s +
3	2s	2s			ON delay for set 3 of 2s
				6:	OFF delay for set 3 of 2s

7

1. Introduction	7.1 Operating and appliance data
2. Summary	7.2 Analog in- and outputs I
3. Hardware	7.3 Digital in- and outputs
4. Operation	7.4 Setpoint-, rotation- and ramp adjustment
5. Selection of Operating Mode	7.5 Motor data and controller adjustments of the asynchronous motor
6. Initial Start-up	7.6 Motor data and controller adjustments of the synchronous motor
7. Functions	7.7 Speed control
8. Error Assistance	7.8 Torque display and -limiting
9. Project Design	7.9 Torque control
10. Networks	7.10 Current control, -limiting and switching frequencies
11. Parameter Overview	7.11 Speed measurement
12. Annex	7.12 Positioning and synchronous control
	7.13 Protective Functions
	7.14 Parameter sets
	7.15 Special Functions
	7.16 CP-Parameter definition

7.15.1 DC-braking ..... 7.15 - 3
7.15.1.1 V/F characteristic control ..... 7.15 - 5
7.15.1.2 Speed-controlled operation without feedback (ASCL) ..... 7.15 - 5
7.15.2 Energy saving function ..... 7.15 - 6
7.15.3 Motorpoti function ..... 7.15 - 7
7.15.4 Timer and counter ..... 7.15 - 9
7.15.5 Brake control ..... 7.15 - 13
7.15.5.1 Mode brake control ..... 7.15 - 13
7.15.5.2 Monitoring of the brake control ..... 7.15 - 13
7.15.5.3 Sequence of the brake control ..... 7.15 - 14
7.15.5.4 Brake control / vector controlled ..... 7.15 - 15
7.15.5.5 V/F characteristic controlled operation ..... 7.15 - 17
7.15.6 Wobbel function ..... 7.15 - 18
7.15.7 Diameter correction ..... 7.15 - 20
7.15.8 Analog setting of parameter values ..... 7.15 - 21
7.15.9 Register function ..... 7.15 - 23
7.15.10 Technology Control ..... 7.15 - 25
7.15.10.1 The PID controller ..... 7.15 - 25
7.15.10.2 PID setpoint ..... 7.15 - 27
7.15.10.3 PID actual value ..... 7.15 - 28
7.15.10.4 Application examples ..... 7.15 - 29

7.15 Special Functions

The following section should facilitate the adjustment and programming of special functions.

7.15.1 DC-braking

The DC braking is available:

- in software type F5-A (standard software), for v/f characteristic control of asynchronous motors (control type F5-M and cS.00/ control mode < 4)
- in software type F5-H in vector controlled operation of asynchronous motors without encoder feedback (cS.01/ actual value source = "2: calculated actual value") and
- at V/F characteristic control (cS.00/ control mode < 4)

During the DC-braking the motor is not decelerated over the ramp. The braking is done with a DC voltage and a DC current, respectively, that is applied to the motor winding.
After activation of the DC braking, the modulation is switched off and the base-block time (base-block time, duration dependent on the power circuit) waited for until the DC value is applied to the motor.
With Pn.28 it is adjusted whereby the DC brake is triggered. According to the adjusted mode, the speed when the DC brake triggers can be preset with Pn.32.
Pn.30 „DC braking time“ determines the braking time (0..100,00 s).
Pn.29 is bit-coded and defines the inputs which trigger DC braking.

Pn.28: DC braking mode			
Bit	Meaning	Value	Explanation
0...3	DC Braking Mode	0: no DC braking	DC braking is never triggered
		1: no direction of rotation and actual value = 0	DC braking, if the setpoint reaches 0 rpm after the ramp generator (ru.02 "display ramp output") and the rotation setting is missing. The braking time is determined by Pn.30 (independent of the actual speed). If the rotation setting is applied again, the DC braking is aborted.
		2: disabling the direction of rotation	DC braking after removal of the rotation setting. The braking time is dependent on Pn.30 and the actual frequency. [1, 2] Re-application of the rotation setting does not abort the DC braking.
		3: Change of direction of rotation	DC braking as soon as the rotation setting changes (different direction of rotation or no setting). The braking time is dependent on Pn.30 and the actual frequency (ru.03). [1, 2] Re-application of the rotation setting does not abort the DC braking.
		4: no direction of rotation and actual value < Pn.32	DC braking if the actual frequency ru.03 [2] is lower than Pn.32 "DC-brake starting value" and the rotation setting is missing. The braking time is dependent on Pn.30 and Pn.32 [3] Re-application of the rotation setting does not abort the DC braking.
		5: Deceleration and actual value < Pn.32	DC braking if the actual frequency ru.03 [1] is lower than Pn.32 "DC braking start level" and the rotation setting is missing. The braking time is dependent on Pn.30 and Pn.32 [3] Re-application of the rotation setting does not abort the DC braking.
		6: Setpoint < Pn.32	The setpoint before the ramp generator (ru.01 "Setpoint display) is smaller than Pn.32 "DC-brake starting value". The braking time is dependent on Pn.30 and the actual frequency (ru.03). [1, 2] To leave the status „22: standstill after DC braking“, ru.01 must be higher than Pn.32 + LE.16 „operating hysteresis“. An increase of the setpoint does not abort the DC braking.
		7: Digital input time-limited	DC braking, as soon as an input programmed to the DC-brake (Pn.29) is active. The braking time is dependent on Pn.30 and the actual frequency (ru.03). 1, [2] restart only after the input is deactivated.
		8: as long as the digital input is set	DC-braking as long as an input programmed to DC-braking is active.
		9: at start of the modulation	DC-braking after enabling the modulation (direction of rotation + control release) for the time Pn.30.
		10: Conditions	DC braking according to the conditions programmed in bit 4..7. The braking time is equal to Pn.30 "DC-brake time"
4		16: DCB after nop	DC braking after status "0: no control release" [4]
5		32: DCB at switch on	DC braking after power-on-reset (power on) [4]
6		64: DCB for auto-retry	DC braking after automatic restart [4]
7		128: DCB after LS	DC braking after status "70: standstill" [4]

[1] The braking time is dependent on the actual frequency (ru.03), not on the actual speed (ru.07). The reference value for the calculation of the braking time, however, is a speed (dependent on ud.02 "Control type", for "4: F5-M / 4000rpm“ is the reference value 1000 rpm). To calculate the braking time, the actual frequency (ru.03) must therefore be converted to a speed according to the following formula:

$$\frac{\text{ru.03} * 60}{\text{pole-pair number of the motor}}$$

[2] Actual braking time = Pn.30 * ru.03 * 60 / pole-pair number of the motor / reference value (The reference value is dependent on ud.02 "Control type". The reverence value in 4000 rpm mode is 1000 rpm and 2000 rpm in 8000 rpm mode etc.)

[3] Actual braking time = Pn.30 * Pn.32 / reference value (The reference value is dependent on ud.02 "Control type". The reverence value in 4000 rpm mode is 1000 rpm and 2000 rpm in 8000 rpm mode etc.)

[4] These adjustment are operative only if in Bit 0...3 "DC-brake mode" the value "10: conditions" is chosen. If the same condition is also set for speed search, DC-brake has priority.

7.15.1.1 V/F characteristic control

In v/f-characteristic control, a DC voltage is applied to the motor. With Pn.31 "DC-brake max voltage", the max. braking voltage is set.
The current is limited only by the inverter. If the inverter is oversized compared to the motor, the maximum braking voltage (Pn.31) must be decreased to avoid overheating of the motor.
At large ratings the maximum braking voltage can lead to overcurrent errors (E.OC). In that case reduce it with Pn31.

7.15.1.2 Speed-controlled operation without feedback (ASCL)

In ASCL-mode, a DC current is impressed on the motor.
With Pn.33 "DC-brake max. current ASCL", the braking current is set. The current can be predefined in a range of 0...400.0% with respect to the rated motor current (dr.00).
The current is limited above by the permissible standstill current (see technical data of the corresponding inverter) or, if in dS.03 the maximum current mode is activated, by dr.37 "Maximum current". The lower limit is given by the magnetising current.

After completion of the DC braking function, the rated flux of the machine must flow before the motor is started. To that end, "Wait for magnetisation = 128: on" (Bit 7 = 1) must be programmed in Parameter dS.04.The torque display is not valid in the DC braking (display always = 0 Nm).

7.15.2 Energy Saving Function

The energy saving function allows the lowering or raising of the current output voltage. In accordance with the activation conditions defined in uF.6, the voltage valid according to the V/Hz-characteristic is changed in percent onto the energy saving level (uF.07).
However, the maximal output voltage cannot be higher than the input voltage even if the value is > 100 %. The function is used for example in cyclic executed load/no-load applications. During the no-load phase the speed is maintained, but energy is saved as a result of the voltage reduction.

uF.07	Energy saving factor
0,0…130,0 % (default 70 %)	

uf.06	Energy saving mode
Bit 0...3	Energy saving function / activation
0	generally off
1	generally active
2	at actual value = setpoint
3	by digital input
4	at clockwise rotation
5	at counter clockwise rotation
6	by constant run clockwise rotation
7	by constant run counter clockwise rotation
8...15	reserved
Bit 4...6	Energy saving function / ramp time Default time ca. 1,6 s
0	Default time
16	Default time / 2
32	Default time / 4
48	Default time / 8
64	Default time / 16

uf.08	Energy saving function input selection
0...4095 (Default 0) also see 7.3 „Digital inputs“	

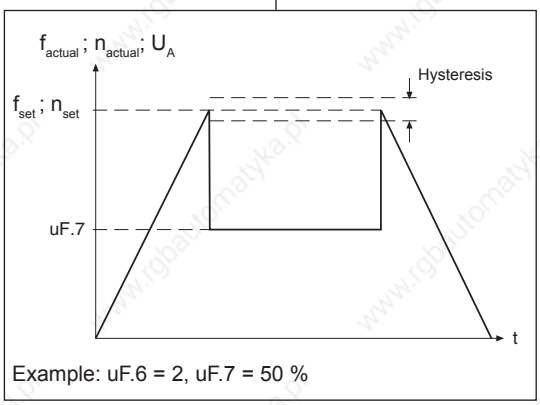

Example: uF.6 = 2, uF.7 = 50 %

7.15.3 Motorpoti Function

This function simulates a mechanic motor potentiometer. Over two inputs the motor potentiometer value can be increased or decreased.

Fig. 7.15.3 Motorpoti function

oP.50: Motorpoti function		
Bit	Value	Meaning
0	0	Value is changed in the current set
	1	Value is changed only in set 0
1	0	no motorpoti reset after power on
	1	Reset to oP.55 after power on

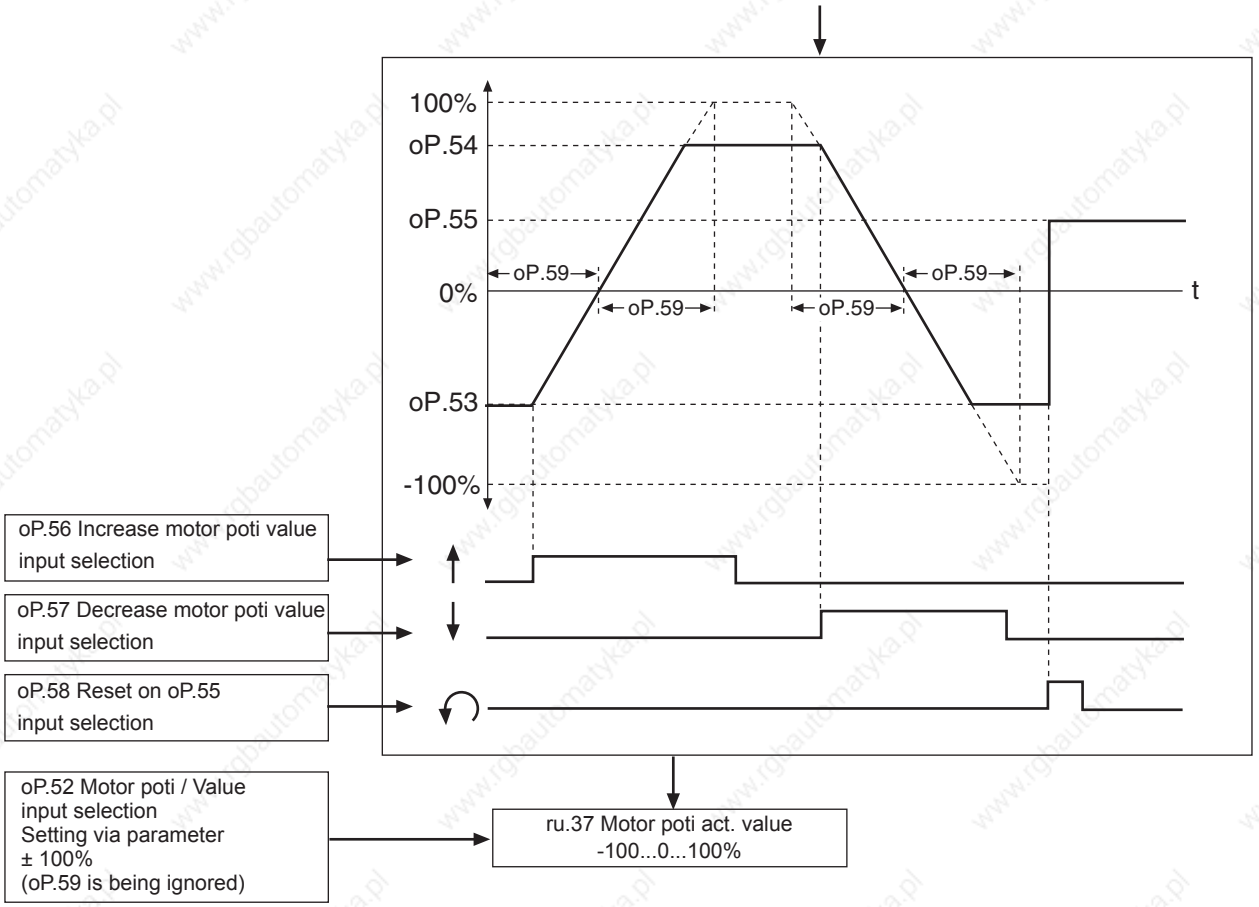

Determine inputs (oP.56...oP.58)

In the first step two inputs must be defined with which the motor potentiometer can be increased or decreased. For that purpose one input each according to the input table is assigned to the parameters oP.56 and oP.57. If both inputs are triggered simultaneously, the potentiometer value is decreased.

Increase motorpoti value	Decrease motorpoti value
⇓	⇓
oP.56	oP.57

Another input (oP.58) can be used to reset the motor potentiometer to the adjusted reset value oP.55.

Input table

Bit -No.	Decimal value	Input	Terminal
0	1	ST (prog. input „control release/reset“)	X2A.16
1	2	RST (prog. input „reset“)	X2A.17
2	4	F (prog. input „forward“)	X2A.14
3	8	R (prog. input „reverse“)	X2A.15
4	16	I1 (prog. input 1)	X2A.10
5	32	I2 prog. input 2)	X2A.11
6	64	I3 (prog. input 3)	X2A.12
7	128	I4 (prog. input 4)	X2A.13
8	256	IA (internal input A)	no
9	512	IB (internal input B)	no
10	1024	IC (internal input C)	no
11	2048	ID (internal input D)	no

Motorpoti function (oP.50)

The basic working method of the motor potentiometer is defined with oP.50. The parameter is bit-coded.

oP.50: Motorpoti function			
Bit	Meaning	Value	Explanation
0	Target set of the motor potentiometer value	0: Act. set (ru.26)	Motor potentiometer value is changed in the active parameter set (displayed in ru.26). Functions using the motor potentiometer value work with the value of the current set.
		1: Set 0	Motor poti value is changed in set 0 Functions using the motor potentiometer value work with the value of set 0.
1	Reset at switch on	0: no reset	Motor potentiometer value remains stored on power off
		2: Reset to oP.55	Motor potentiometer value is written to the value of oP.55 "Motor potentiometer reset value" in all set on power on
2	Source of the ramp time	0: Set 0	The adjustment of the motor potentiometer value occurs with the value of oP.59 "Motor potentiometer ramp time" from set 0.
		4: Act. set (ru.26)	The adjustment of the motor potentiometer value occurs with the value of oP.59 "Motor potentiometer ramp time" from the active set

Motorpoti inc / dec time (oP.59)

This parameter defines the time for the motor potentiometer in order to run from 0...100%. The time is adjustable between 0...50000 s.

Control range (oP.53, oP.54)

The control range is limited by parameters oP.53 "motorpoti min. value" and oP.54 "motorpoti max. value" (see picture 7.15.3).

Display of motor potentiometer value (ru.37)

This parameter shows the current value of the motor potentiometer in percent.

Motor potentiometer value (oP.52)

A percentage value can be set directly by operator or bus via this parameter. The ramp time remains unconsidered at this setting.
The parameter value is limited by oP.53 / oP.54. If a digital input is set for increasing or decreasing the motor potentiometer value, the value of oP.52 changes.

7.15.4 Timer and Counter

Two timers are incorporated in the COMBIVERT. As long as one of the adjustable starting conditions (LE.18/23) or a programmable input (LE.17/22) is set, the timer counts until reaching the final range value. If one of the reset conditions (LE.20/25) is fulfilled or one programmable input (LE.19/24) is set, the timer jumps back to zero. The clock source and the counting direction is adjusted with LE.21/26. It can be counted in seconds, hours or by a special programmed input for that. The current timer content is displayed in ru.43/44. On reaching an adjustable comparison level (LE.00...07), the switching condition 37/38 is set. It can be used to set an output.

Fig. 7.15.4 Timer programming

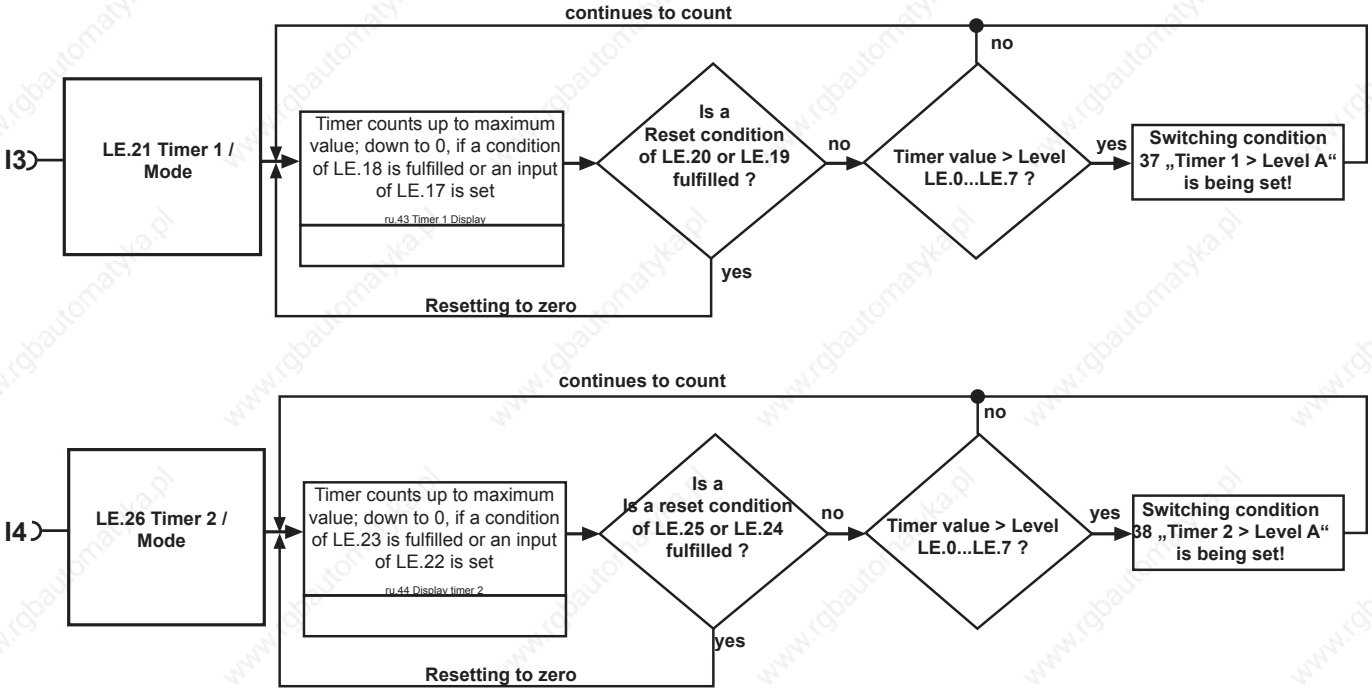

Timer mode (LE.21 / LE.26)

LE.21 and LE.26 determine the clock source and the counting direction of timer 1 and 2. Clock pulse source can be the time counter in 0.01s or 0.01h grid, pulses from a digital input, or revolutions of the encoder on encoder channel 1. The timer runs generally as long as a starting condition is active. After a reset the timer starts again at zero. Following clock sources can be selected:

LE.21 / LE.26: Timer 1 / 2 mode			
Bit	Meaning	Value	Explanation
0...2	Selection clock pulse source	0: 0,01s (internally clock)	The timer value increases / decreases every 10 ms by 0.01
		1: 0,01h (internally clock)	The timer value increases / decreases every 36s by 0.01
		2: every edge T1-I3 / T2-I4	Each edge on I3 (for timer 1) or I4 (for timer 2) increases / decreases the timer value by 0.01
		3: positive edge T1-I3 / T2-I4	A rising edge on I3 (for timer 1) or I4 (for timer 2) increases / decreases the timer value by 0.01
		4: Rotation encoder 1	Each revolution (clockwise rotation and counter clockwise rotation) of the encoder on channel 1 increases / decreases the timer value by 0.01
		5...7: reserved	
3, 4	Counting direction	0: upward	The counting direction of the timer is always upwards
		8: Dependent on the actual speed FOR = upward REV=downward	The counting direction of the timer is dependent on the current direction of rotation
		16: Dependent on the actual speed FOR = downward REV = upward	
		24: reserved	
5	Overflow behaviour	0: Stop at limit	The timer stops on reaching the maximum value of 655.35 or the minimum value of 0
		1: Reset and further	The timer always runs through. After reaching of the maximum value (655.35) the timer starts again at 0. After reaching of the minimum value (0) the timer starts again at 655.35.

Timer start condition (LE.18 / LE.23)

From the following table the conditions can be selected at which the timer is started. The individual conditions are OR-operated with the timer start input selection (LE.17/LE.22).

LE.18 / LE.23: Timer / Starting condition		
Bit	Value	Timer / Starting condition
0	1	Modulation on
1	2	Modulation off
2	4	Actual freq. =setpoint freq.
3	8	Modulation off and no power on

In case of several starting conditions the values are to be added up.

Timer start input selection (LE.17 / LE.22)

Additionally the timer can be activated by one or several inputs. The sum of the valences is to be entered, if the timer shall be started by different inputs The individual inputs are OR-operated. The start input selection is OR-operated with the timer / starting condition (LE.18/LE.22).

LE.17 / LE.22: Timer start input selection			
Bit	**Value**	**Input**	**Terminal**
0	1	ST (prog. input „control release/reset“)	X2A.16
1	2	RST (prog. input „reset“)	X2A.17
2	4	F (prog. input „forward“)	X2A.14
3	8	R (prog. input „reverse“)	X2A.15
4	16	I1 (prog. input 1)	X2A.10
5	32	I2 prog. input 2)	X2A.11
6	64	I3 (prog. input 3)	X2A.12
7	128	I4 (prog. input 4)	X2A.13
8	256	IA (internal input A)	no
9	512	IB (internal input B)	no
10	1024	IC (internal input C)	no
11	2048	ID (internal input D)	no

Timer display (ru.43 / ru.44)

ru.43 / ru.44 displays the actual counter reading dependent of the adjusted clock source (LE.21 / 26). By writing on ru.43 / 44 the counter can be set to a value. If the clock source is changed during the running time the counter content is maintained but is interpreted according to the new clock source.

Timer reset input selection (LE.19 / LE.24)

According to the following table the inputs with which the timer is reset can be specified. The individual inputs are OR-operated, i.e. if one of the specified inputs is triggered, the timer jumps back to zero. If a starting and reset condition are active simultaneously, reset has priority.
(see table "Timer start input selection (LE.17 / LE.22)")

Timer reset condition (LE.20 / LE.25)

According to the following table the conditions can be defined under which the timer is reset in addition to the inputs. The individual conditions are OR-operated.

LE.20 / LE.25: Timer reset condition		
Bit	**Decimal value**	**condition**
0	1	Modulation on
1	2	Modulation off
2	4	Actual value = Setpoint value
3	8	Change of parameter set
4	16	Power-On-Reset

Timer display (ru.43 / ru.44)

ru.43 / ru.44 displays the actual counter reading dependent of the adjusted clock source (LE.21 / 26). By writing on ru.43 / 44 the counter can be set to a value. If the clock source is changed during the running time the counter content is maintained but is interpreted according to the new clock source.

Comparison level 0...7 (LE.00...LE.07)

LE.00...LE.07 define the level for the switching conditions 37 / 38 ("Timer > Level").If the timer exceeds the adjusted value the switching condition is set. A level in the range of -10.737.418,24 to 10.737.418,23 can be adjusted. But only values of 0...655,35 are sensible for the counter.

7.15.5 Brake Control

For applications in the areas lifting and lowering, or other applications requiring the use of a brake, the control of the brake can be taken over by the KEB frequency inverter.
For this the brake control must be activated in parameter Pn.34 "brake control mode" and a transistor or relay output must be assigned with the function "18: brake control". The output becomes active if the brake is to be ventilated.

7.15.5.1 Mode brake control

With Pn.34, the status display during the brake handling can be set and a monitoring function can be activated.
The brake control is set-programmable.

Pn.34: Mode brake control	
Value	Explanation
0: off	Brake control deactivated.
1: with display	Brake control activated. Progress message "85: Close brake" (bon) or "86: Open brake" (boFF).
2: without display	Brake control activated. No brake-specific status messages.
3: with phase check / with display	Brake control activated. Progress message "85: Close brake" (bon) or "86: Open brake" (boFF). Check whether all 3 inverter output phases can be powered. If one phase is missing, "56: ERROR! Brake control" (E.br) is triggered.
4: with phase check / without display	Brake control activated. No brake-specific status messages. Check whether all 3 inverter output phases can be powered. If one phase is missing, "56: ERROR! Brake control" (E.br) is triggered.
5: quick stop / with display	Brake control activated. The brake opening time immediately starts (Pn.36) if the drive restarts during closing time (Pn.40).
6: quick stop / without display	Brake control activated. The brake opening time immediately starts (Pn.36) if the drive restarts during closing time (Pn.40). No brake-specific status messages.
7: phase check / quick stop / with display	Brake control activated. The brake opening time immediately starts (Pn.36) if the drive restarts during closing time (Pn.40). Check whether all 3 inverter output phases can be powered. If one phase is missing, "56: ERROR! Brake control" (E.br) is triggered.
8: phase check / quick stop / without display	Brake control activated. The brake opening time immediately starts (Pn.36) if the drive restarts during closing time (Pn.40). No brake-specific status messages. Check whether all 3 inverter output phases can be powered. If one phase is missing, "56: ERROR! Brake control" (E.br) is triggered.

7.15.5.2 Monitoring of the brake control

Pn.43 "Min. load brake control"

With Pn.43 "Min. load brake control", a further monitor for the brake control can be activated.
For the monitoring of the utilization acceptance through the inverter a minimal utilization level can be adjusted in this parameter.
If the brake is to be opened on start at the end of the pre-magnetising time (Pn.35), the load factor may not be smaller than the adjusted level. Otherwise the error E. br is triggered. Reaching the hardware current limit the error E.br is triggered too. The current is monitored only at this time (directly before the opening of the brake).
The monitoring is deactivated when Pn.43 is set to 0.

Pn.42 "Brake check input selection"

Between the end of the brake closing period (Pn.40) and the beginning of the break opening period (Pn.36), the brake must always be closed. If the input becomes (or is) active during this phase, E.br is triggered.
Similarly, from the end of the brake opening period (Pn.36) to the end of the brake delay time (Pn.39), the brake must always remain ventilated. If the input becomes (or is) inactive in this phase, E.br is also triggered.
With this input, e.g., a protection monitoring could be executed.

7.15.5.3 Sequence of the brake control

The sequence of the brake control is defined by five times, two for the opening and three for the closing of the brake.

open brake

The opening of the brake is started when the control release is closed and the command to start the drive is received.
In vector controlled operation, this is the activation of the direction of rotation, the setpoint speed has no effect. That means: the brake is opened as well on setting the speed setpoint value = 0.
During positioning, the opening of the brake is triggered, e.g., by a "Start positioning" or a "Start approach to reference point" command

- Pn.35: premagnetising time

  The pre-magnetisation time serves to build up a holding torque to minimise the "stall out" of the drive during ventilation of the brake.
  The adjustment of this time and of the brake control-starting value (Pn.37) depends on the mode (v/f-characteristic controlled, vector controlled, etc.) and is described in the items 7.15.5.4 and 7.15.5.5.
- Pn.36: Brake release time

  With begin of the brake ventilation time, the signal to open the brake is issued.
  During the brake ventilation time, in which the brake is loosened mechanically, the speed setpoint value (ru.01) is not yet applied, instead, the brake control-starting value (Pn.37) is still in effect. For vector controlled systems, Pn.37 must contain the value 0 rpm for synchronous as well as for asynchronous motors.

close brake

The closing of the brake is triggered by disabling the direction of rotation (speed control), reaching of the target position (positioning), or switching off the modulation (opening of the control release or error).
If the modulation is switched off, the break control output is immediately deactivated so that the brake closes.
In all other cases, the sequence is as follows:

- Pn.39: Brake delay time

  After switching off of the rotation setting, the drive runs to the stopping speed Pn.41 (for vector controlled drives, this parameter must contain the value 0 rpm) and waits there for the duration of the brake delay time.
- Pn.40: Brake closing time

  Afterwards, the brake control output is deactivated and the brake takes over the load during the brake closing time. The inverter remains at the stopping speed Pn.41 during this time.
- Pn.38: Brake fadeout time

  After expiration of the brake closing time (Pn.40), the fadeout time expires. During this time, the current is lowered to 0. After expiration of the fadeout time, the modulation remains switched on for another 100 ms.
  Thereby, the noise that can occur in the motor during a jolt-like shutdown of the current can be prevented.
  After the current has been drained, the inverter changes into the status "70: standstill (Modulation off)" (LS)

The following figure shows the sequence of the brake control without fadeout time. In vector controlled system, the start- and the stop-value (Pn.37 / Pn.41) must be set to 0 rpm.

Figure 7.15.5.3 Brake control

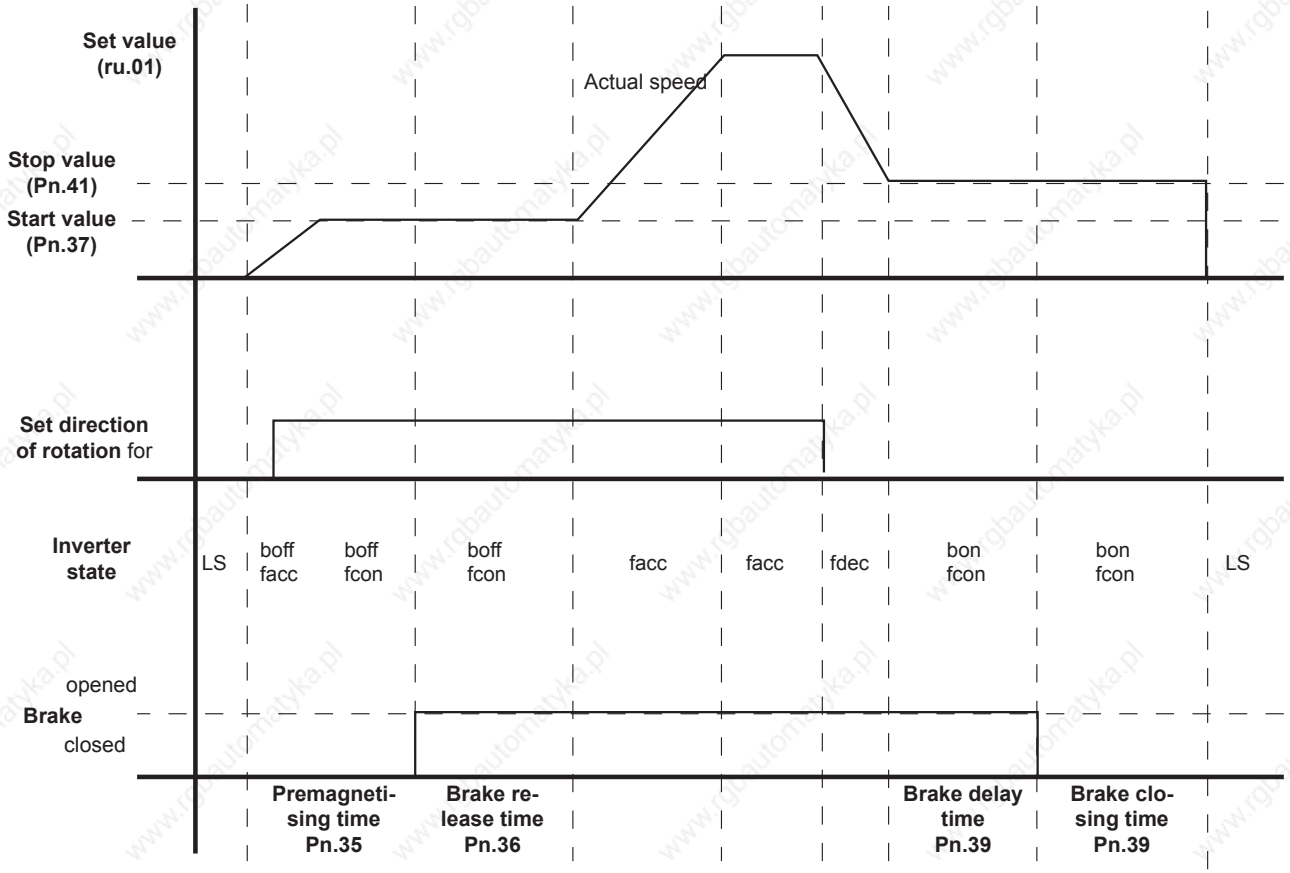

7.15.5.4 Brake control / vector controlled

Premagnetisation and delay time

In vector controlled operation, the drive builds up torque even at the setpoint speed 0. Therefore, no starting or stopping speed is required (Pn.37 = Pn.41 = 0 U/min).
Thus can the pre-magnetisation time Pn.35, too, be set to zero. The time the drive requires to build up the flux is always waited for, until the output for loosening the brake is set.
Exception:
If the bit 7 "Wait for magnetisation" in dS.04 "Flux- / rotor adaptions mode" is set to "0: off", a pre-magnetisation time must be parametrised for flux buildup. This setting is permissible only for operation without motor model.

Since, independent of the selected deceleration ramp, the brake closing time only starts when the actual speed reaches the value of the stopping speed (= 0 rpm), no brake delay time has to be waited out.
In some applications, however, the brake delay time is used to save time.
If the output for brake control has been deactivated once, the complete brake handling (Brake closing time + fadeout time + brake opening time) must be executed for a new start of the drive.
By setting a brake delay time, the collapse of the brake can be suppressed for a quick succession of starts (e.g., for positioning). Only when the drive remains stationary for a longer period, the brake is closed.

Optimization of the load transfer

In vector controlled operation, there are another two special functions that optimise the load transfer to the drive:

- speed-dependent Ki for the speed controller

  For the load transfer, an enormous speed rigidity is often required for hoists or lifts so that the opening of the brake and the transfer of the load by the inverter is not felt. This rigidity can be achieved by a very large "K-increase" (cS.10) for the speed controller.
  This increase is normally reversed again over an adjustable speed range. For extremely large KI-increases, this slow reversal cannot be used since the speed controller is then too vibration-prone.
  By input of the value "-1: Brake release" in parameter corner speed for max. KI (cS.11), one can achieve that the "KI-increase" is immediately set to 0 at the end of the brake opening time.
- Brake precontrol

  Without precontrol, the drive must first move, i.e., a system deviation must be built up so that the controller provides a counter torque.
  With the precontrol, the speed controller is preloaded with a torque at the beginning of the brake opening time. To avoid "stall out", this torque is, in the ideal case, equal to the load to be taken over by the brake.
  The precontrol value is set with a ramp within 1/5 of the brake ventilation time.
  The function is activated by selecting in Pn.70 "Brake precontrol torque source" how the precontrol value is to be defined.

Pn.70: Brake pretorque source	
Value	Function
0: off	Precontrol function off
1: analog REF	Setting of the precontrol torque in % of the rated torque via the analog channel REF or AUX. The analog signal can come from, e.g., a load weighing setup in a lift cabin.
2: analog Aux	
3: digital % (Pn.71)	Setting of the precontrol torque in % of the rated torque via parameter Pn.71 "Brake precontrol setpoint in %"

Example: Let a lift be equipped with a counterweight so that for a half-loaded cabin, no holding torque must be expended.
For an empty cabin, the load weighing setup provides a signal of 0%.

To hold the cabin, the motor requires + rated torque .

For a fully loaded cabin, the load weighing setup provides a signal of 100%.

To hold the cabin, the motor requires + rated torque .

Let the signal from the load weighing setup be connected to AN2, which serves as the AUX-input.

I.e.: a signal of 0% on AN2 shall produce a precontrol value of 100%

a signal of +100% on AN2 shall produce a precontrol value of -100%.

"AN2 offset X" (An.16) be equal to 0%, "AN2 lower limit" (An.18) = -100%, and "AN2 upper limit" (An.19) = 100%

The formula for amplification and offset setting is then for AN2:

Output signal = "AN2 amplification" (An.15) * input signal + "AN2 offset Y" (An.17)

This gives, for "AN2 offset Y" = 100% and for "AN2 amplification" = -2

Operation without encoder

Since the settings range of the drive is limited during operation without encoder, no brake handling should be used for SCL as well as for ASCL.

For SCL, the parameters "Pre-magnetisation time" (Pn.35) and "Brake ventilation time" (Pn.36) are used for the alignment of the motor with a DC current (see chapter 7.6.3.4 SCL / standstill and starting phase)

7.15.5.5 V/F characteristic controlled operation

Start reference (Pn.37), stop reference (Pn.41)

In v/f-characteristic controlled operation, start and stop values must be set to hold the load in standstill and, respectively, reach standstill after deceleration, so that the brake can collapse again.
The adjustable start/stop value stands in direct connection with the necessary holding torque. A preset value can be obtained according to the following formula:

$$\text{Start- and, respectively, stop value} = \frac{(\text{synchronous speed} - \text{rated speed}) \times \text{required holding torque}}{\text{Rated torque}}$$

Based on these value, an adaption to the particular application must be made since other values, e.g., the boost, also have an effect on the behaviour during load transfer.

Example: a 4-pole motor has a rated frequency of 50 Hz and a rated speed of 1460 rpm.
The synchronous speed of the motor thereby is = 1500 rpm and the slip speed is 1500 - 1460 = 60 rpm at rated torque and nominal voltage.
The drive should be able to provide rated torque at brake release if a start value (Pn.37) of 60 rpm is preset.

Premagnetising time (Pn.35)

So that a torque can be built up, the flux in the motor must have been built up. With beginning of the pre-magnetisation time, the motor is powered. This time must be long enough for the motor to build up its flux.

Depending on the motor, this time can be between approximately 100 ms (small power) and fractions of a second (motors with large power).

Brake delay time (Pn.39)

In v/f-characteristic controlled operation, the speed follows the predefined deceleration ramp not quite exactly. After completion of the deceleration ramp, there must therefore be a delay time, to mask dynamic effects.

The wobble generator enables in period and amplitude changeable sawtooth process of the setpoint. It is activated with the parameter oP.44 Bit 0...3 = „1“.

7.15.6.a Additional funktion: Wobbel generator

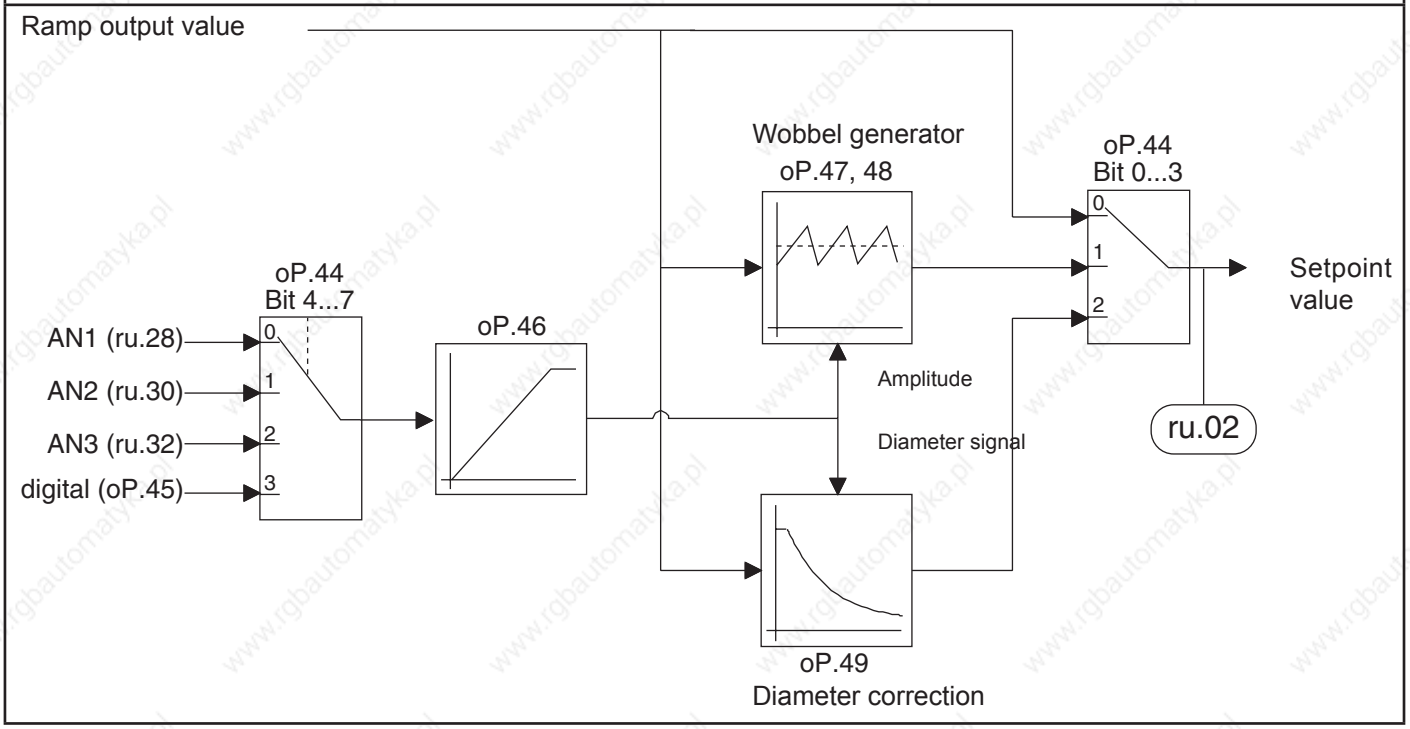

Activation of the wobble generator

The wobble function must be activated in parameter oP.44.

oP.44: Ext. function mode /source		
Bit	Meaning	Value
0...3	Select function	0: off
		1: Wobble function
		2: Diameter correction
		3...15: off

Determination of the sweep amplitude height

Parameter oP.44 determines which source presets the amplitude height of the wobble function.

oP.44: Ext. function mode /source		
Bit	Meaning	Value
4...7	Adjust input source	0: AN 1 input (ru.28)
		16: AN 2 input (ru.30)
		32: AN 3 input (ru.32)
		48: digital source (oP.45)
		64: Aux input (ru.53)

Except to the analog setting via AT 1, AT 2, AT 3 or AUX, the sweep amplitude can be preset also via oP.45 „ext. function digital source “in the range of 0… 100%.

Change of the sweep amplitude

The maximum change rate of the sweep amplitude is limited with parameter oP.46 „ext. function acc/dec. time“.
Parameter oP.46 defines a time between 0,00...20,00 s, inside the sweep amplitude can increase or decrease.
The specified value refers to a sweep amplitude change of 100 %.

Period of the wobble period

The acceleration time is parameterized with oP.47 „sweep-gen. acceleration time“, the deceleration time of the wobble signal with oP.48 „sweep-gen. deceleration time“.
Both times are adjustable within the range of 0… 20.00 s.
Together the two parameters result in the period duration of the wobbel period.

Operating principle of the wobble function

The following picture shows the setpoint process, which is generated by the wobble function:

7.15.6.b Operating principle of the wobble function

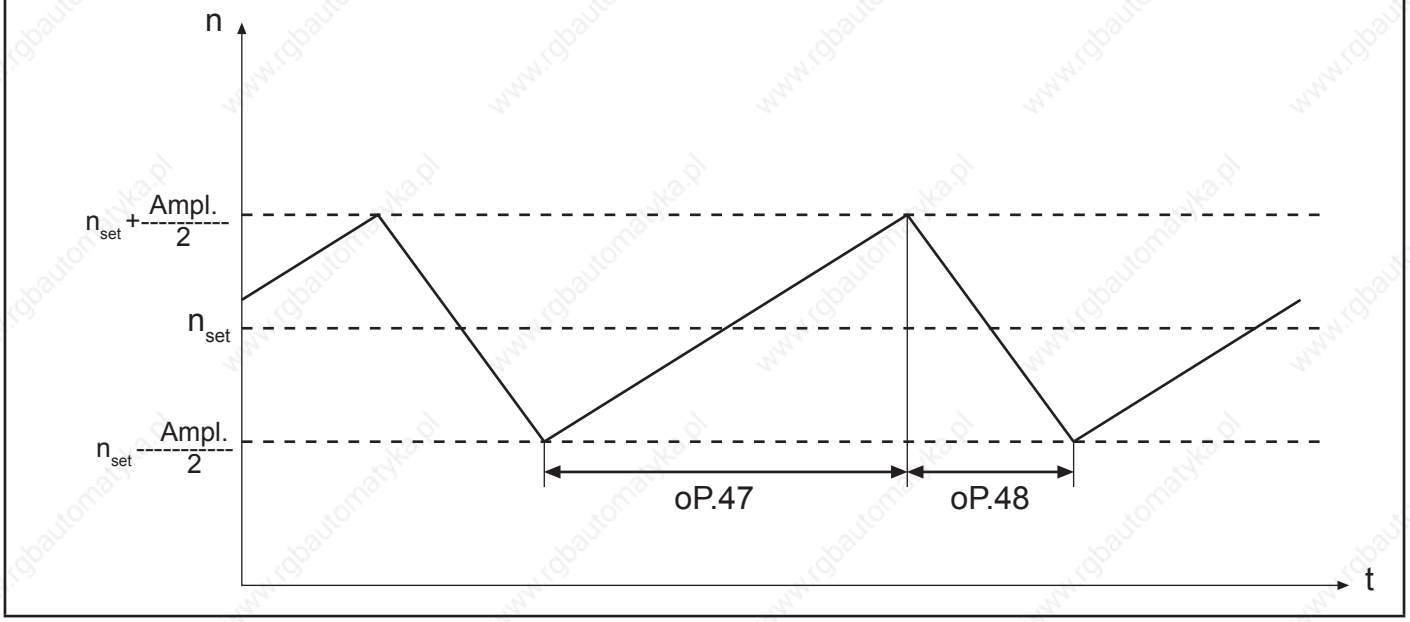

7.15.7 Diameter correction

Through the use of the diameter correction the tool path feedrate of a winding product can be kept constant at changing diameter of the reel bale.

7.15.7 Additional function: Diameter correction

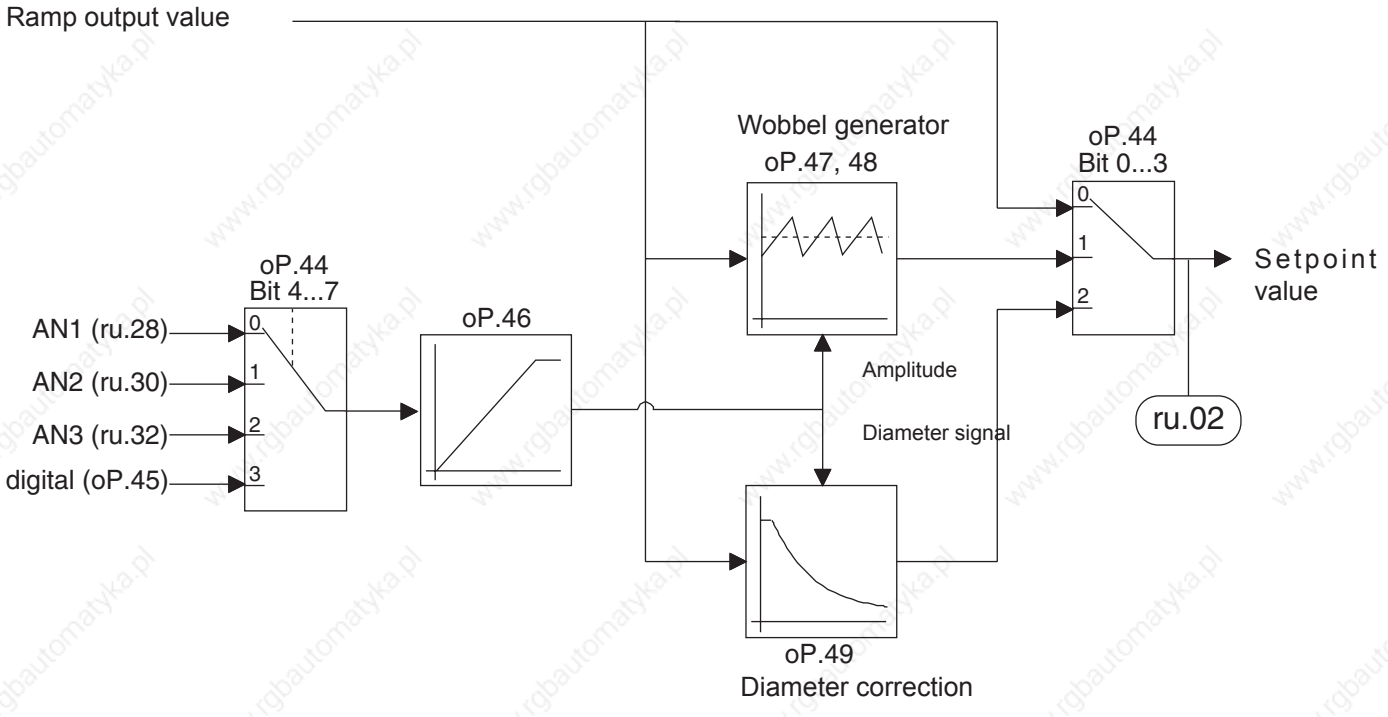

Activation of the diameter correction

The diameter correction must be activated in parameter oP.44.

oP.44: Ext. function mode /source		
Bit	Meaning	Value
0...3	Select function	0: off
		1: Wobble function
		2: Diameter correction
		3...15: off

Determination of the diameter signal

oP.44 determines the source where the diameter correction is output.

oP.44: Ext. function mode /source		
Bit	Meaning	Value
4...7	Adjust input source	0: AN 1 input (ru.28)
		16: AN 2 input (ru.30)
		32: AN 3 input (ru.32)
		48: digital source (oP.45)
		64: Aux input (ru.53)

Except to the analog setting via AT 1, AT 2, AT 3 or AUX, the diameter signal can be preset also via oP.45 „ext. function digital source “in the range of 0… 100%.

Specification of the diameter correction

The diameter signal is evaluated within the range of 0 % to 100%. Values < 0% are set to 0%, values > 100% are limited to 100%.
The diameter signal of 0% corresponds to the minimum diameter of the reel bale (dmin).
The output speed of the ramp generator (ru.02) is not changed in this case.
A diameter signal of 100% corresponds to the maximum diameter of the reel bale (dmax).

In order to be able to calculate the required speed change, the ratio of minimum to maximum diameter (dmin/dmax) must be known.
The ratio of minimum to maximum diameter (dmin/dmax) is preset by way of oP.49 and can be adjusted within the range of 0,010...0,990 with a resolution of 0,001.

The corrected output speed of the ramp generator is determined as follows:

$$\text{Corrected output speed} = \frac{\text{Output speed ramp generator (ru.02)}}{1\text{-diameter signal} \times \left(\frac{1}{\text{oP.49}}\right)^{-1}}$$

Rate of change of the diameter signal

The rate of change of the diameter signal can be limited by a ramp generator.
Parameter oP.46 „ext. funct. acceleration/deceleration time“ defines a time within the range of 00...20,00 s, which is required for a change of the diameter signal of 0...100%.

7.15.8 Analog Setting of Parameter Values

With this function it is possible to preset parameter values analog. The AUX-function or the motor-poti function can be adjusted as source.

Analog parameter setting source (An.53)

This parameter determines whether the analog parameter setting occurs via the motor-poti or the aux-function.

An.53: Analog parameter setting source	
Value	Function
0	AUX
1	Motorpoti function

The Bus-address of the parameter, that is to be adjusted in analog mode, is adjusted here (see chapter 11.1). Following parameters can be adjusted.

Analog parameter setting destination (An.54)

uF.01 / 07
cn. 04 / 05 / 06
An.32 / 37 / 42 / 48
LE.00 / 01 / 02 / 03 / 04 / 05 / 06 / 07
cS.06 / 09
Ec.04 / 14
PS.31 / 33

In case an invalid parameter address is selected, the message "IdAtA" (or "data invalid" at COMBIVIS) is output and the setting is ignored.

Analog parameter setting offset (An.55)

Defines the parameter value, that adjusts itself at 0 % analog parameter setting. The parameter value must be entered with the internal standardization of the target parameter.

$$\text{Value to be adjusted} = \frac{\text{Desired value of target parameter}}{\text{Resolution of target parameter}}$$

Analog parameter setting max. value (An.56)

Defines the parameter value, that adjusts itself at 100 % analog parameter setting. The parameter value must be entered with the internal standardization of the target parameter.

Analog parameter setting set pointer (An.57)

An.57 determines the parameter set which edited the selected parameter. If a programmable parameter is adjusted as target parameter, the adjusted set in An.57 is edited.

An.57: Analog parameter setting set pointer	
Value	Function
-1	active set is edited
0...7	adjusted set is edited

If a non-programmable parameter is adjusted as target parameter, it is always edited in set 0 independent on An.57.

7.15.9 Register function

It is possible in synchronous operation that master and slave are additionally synchronized to two reference signals. This reference signals are e.g. in form of approximation initiators at the master and slave axis. The gear factor is adapted by the register function in order to adjust the time per cycle. Dependent on parameter „pos/syn mode “ps.00 bit11 it can be adjusted if the gear change is executed in consideration of the ramp times (op.28… 33). An adjustable angle deviation can be used to synchronize the two reference signals.

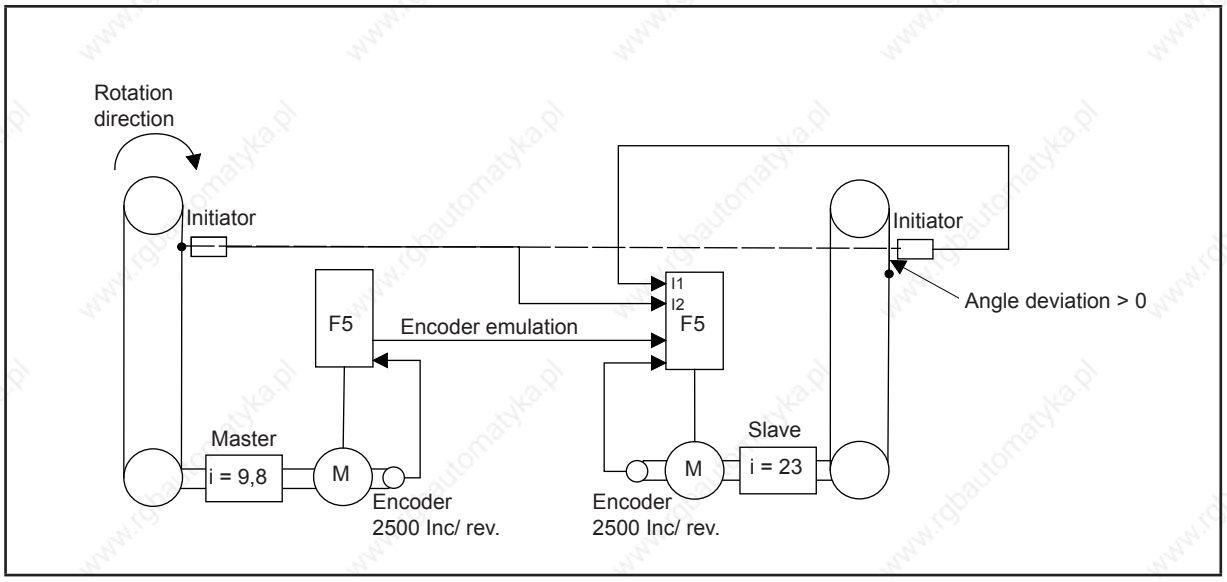

The register function is activated by parameter „register mode“ (rG.00).

rG.00: Register mode			
Bit	Meaning	Value	Function
0	Register mode	0	off
		1	on
		2	on, teach angle deviation
		3	reserved
1	Compensate angle deviation	0	off
		4	on

Both initiator signals must release two times after activation of the register function before the register function

triggers an activity.

The gear factor is calculated from:

register distance master (rG.14), number of increments from main pulse to main pulse
register distance slave (rG.15), number of increments from main pulse to main pulse
numerator, gear factor (channel1(ec.56) or channel2 (ec.58))
denominator, gear factor (channel1(ec.57) or channel2 (ec.59))

i = slave difference / master difference

numerator = i * denominator

If it is switched in a parameter set with rG.00 = Bit 0....1=2, the first calculated angle deviation between master and slave is stored in parameter „register angle level 1“ (ps.64) (teachen). The max. angle correction per period (rG.02) must be adjusted in order to activate the angle deviation.
The direction of the angle deviation can be adjusted via rG.00 bit 2… 3.

Two interpolation points where the angle deviation via interpolation can be preset dependent on the master speed can be defined via parameters rG.08, rG.09 and rG.10, rG.11. The angle deviation is constantly defined via rG.08 with rG.10 = 0 = off. The function of the angle setting is not active at speed left to rG.09 and right to rG.11.

Angle deviation standardization:

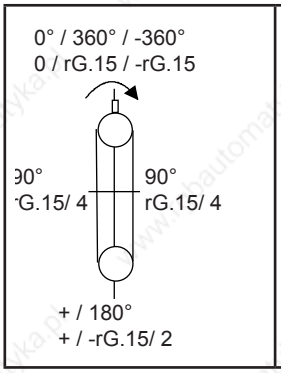

The angle deviation can be preset optionally via rG.08… rG.11, but it is internal limited to +-slave difference (rG.15). Additionally a renormalization takes place, thus the angle deviation setpoint ranges between - rG.15/2… 0….+rG.15/2.

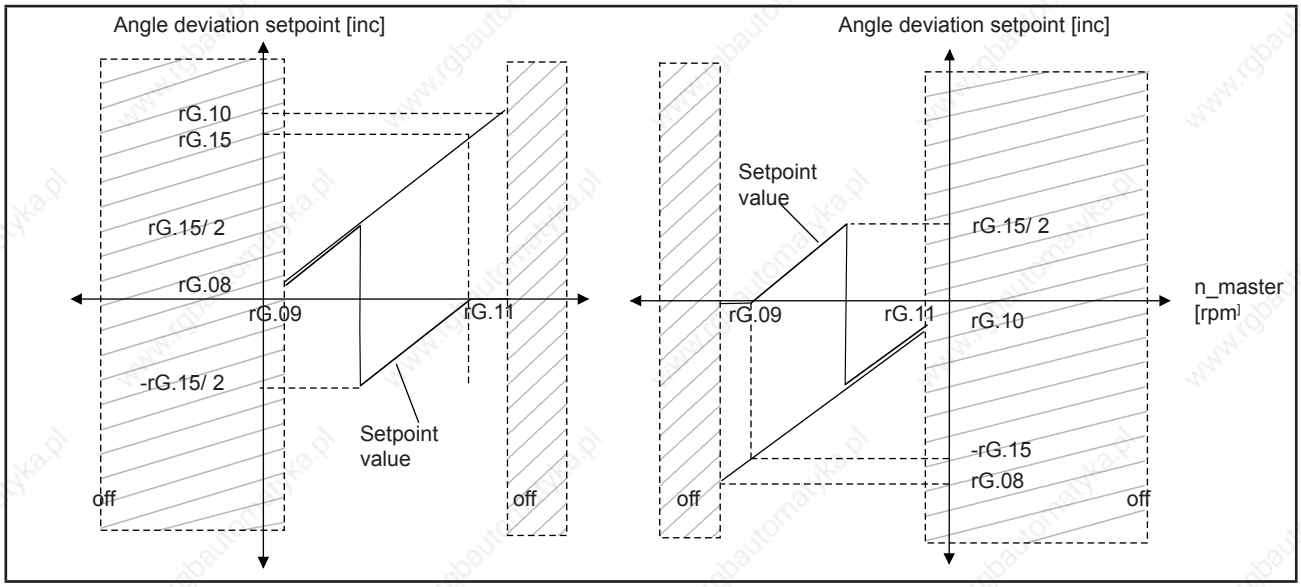

A possible parameter list for picture 2:

Addr.	Value	Notice
PS.0	1025	Synchron mode + synchronisation at the start via op.28
rG.00	5	Register function activated + angle adjustment on
rG.01	0,5%	Gear factor is known (i_slave/i_master => ec.58 =230, ec.59=98) and adjustable without error
rG.02	4600 Inc	One period is e.g. 230000 inc at the slave and a deviation per revolution can only be a few increments. Thus 2° per period is compensated
rG.03	1 ms	If the gear factor is compensated the deviation amounts approx. 0.5 ms
rG.04	16	Input I1 slave
rG.05	32	Input I2 master
rG.06	1	Only one pulse per revolution of the master
rG.07	1	Only one pulse per revolution of the slave
rG.08	30000 inc	Angle deviation from the master to the slave drive, compensate only upto 50 rpm (positive direction of rotation)
rG.09	50 rpm	
rG.10	0 inc	No second interpolation point, constant rG.08
rG.11	4000 rpm	No angle deviation > rG.11

7.15.10 Technology controller

The KEB COMBIVERT is equipped with an universal programmable technology controller, which is able to create pressure control, temperature or dancer position control.

7.15.10.1 The PID controller

The technology controller consists of a setpoint/actual value comparator, which transmits the system deviation to the PID controller. The P, I and D-component is adjusted with cn.04, 05 and 06. Parameters cn.07 and cn.08 limit the max. manipulated variable of the controller.
The controller ratio of 0… 100% is defined with the PID fading time (cn.09). Parameter cn.14 adjusts the frequency ratio in Hz/% (only F5-G/B). The PID controller, the I-component separately and/or the controller fading can be reset with parameters cn.11, 12 and 13. A PID reset condition can be adjusted with cn.10.

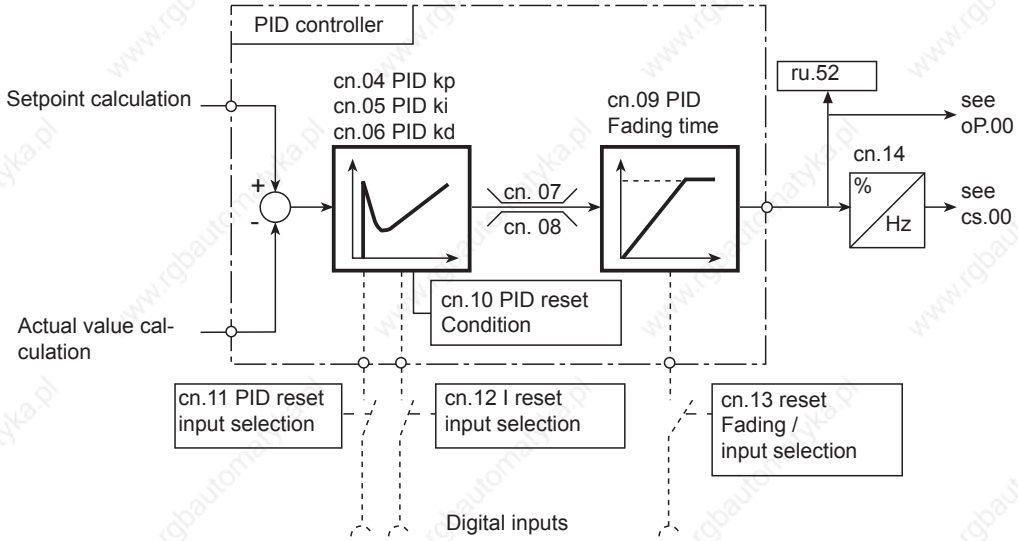

PID controller KP (cn.04)

Determines the proportional gain factor in the range of 0,00...250,00.

PID controller KI (cn.05)

Determines the integral gain factor in the range of 0,000...30,000.

PID controller KD (cn.06)

Determines the differential gain factor in the range of 0,000...250,00.

PID positive limit (cn.07), PID negative limit (cn.08)

The maximum positive manipulated variable in the range of -400,0...400,0 % is specified with cn.07, the maximum negative manipulated variable in the range of -400,0...400,0 % with cn.08.

PID fading time (cn.09)

Thereby the controller intervention can be linerarly increased at the start and/or be linearly decreased at the reset of fading. The time refer to 100% controller output value. If an input is programmed to „fade in reset (cn.13) “, the fade in is counted down when the input is active and counted up when the input is inactive.

Fade in is calculated in accordance with the following formula if „- 0.01“ is adjusted:

Fade in factor = $f_{setting}$ (ru.02) / max. setpoint (oP.10/11)

The function is only active if the technology controller is used as process controller (cS.00 Bit 0...2 = 1). The fading time is 0 if it is used as setpoint controller.

PID reset condition (cn.10)

The reset condition of the PID controller can be preset via cn.10. Simple speed controls for both directions of rotation can be realized thereby.

cn.10: PID reset condition	
Value	Explanation
0	PID controller is not reset
1	PID controller = 0 (constantly reset)
2	PID controller is reset if the modulation is off

Value „2“ must be adjusted for speed controls in order that the I-component of the controller is reset at LS or nOP. Value „1“serves primary for the start-up, in order to reset the controller manually.

Reset of the controller via digital inputs (cn.11...13)

The total controller, the I-component, as well as the controller fading can be reset via the digital inputs. The fade-in time is valid at reset of fading. For that the decimal value of the corresponding inputs must be entered into the following parameters (see table below):

cn.11 reset PID / input selection
cn.12 reset I / input selection
cn.13 fade in reset / input selection

Bit	Decimal value	Input	Terminal
0	1	ST (prog. input „control release/reset“)	X2A.16
1	2	RST (prog. input „reset“)	X2A.17
2	4	F (prog. input „forward“)	X2A.14
3	8	R (prog. input „reverse“)	X2A.15
4	16	I1 (prog. input 1)	X2A.10
5	32	I2 prog. input 2)	X2A.11
6	64	I3 (prog. input 3)	X2A.12
7	128	I4 (prog. input 4)	X2A.13
8	256	IA (internal input A)	no
9	512	IB (internal input B)	no
10	1024	IC (internal input C)	no
11	2048	ID (internal input D)	no

PID output frequency at 100% (cn.14)

This block converts the proportional controller output value to frequency. The adjustment of cn.14 determines, which frequency is output at 100% controller output value. A frequency of -400,0...400,0 Hz (dependent on ud.02) can be adjusted. The output value forms the output frequency (ru.03) at cS.00 Bit 0… 1 = 1 added with the ramp output frequency (ru.02).

7.15.10.2 PID reference

This block describes the PID controller setpoint. The PID setpoint consists of the absolute reference (cn.01) and an additional reference source adjustable with cn.00. The two values are added and form the PID controller setpoint.

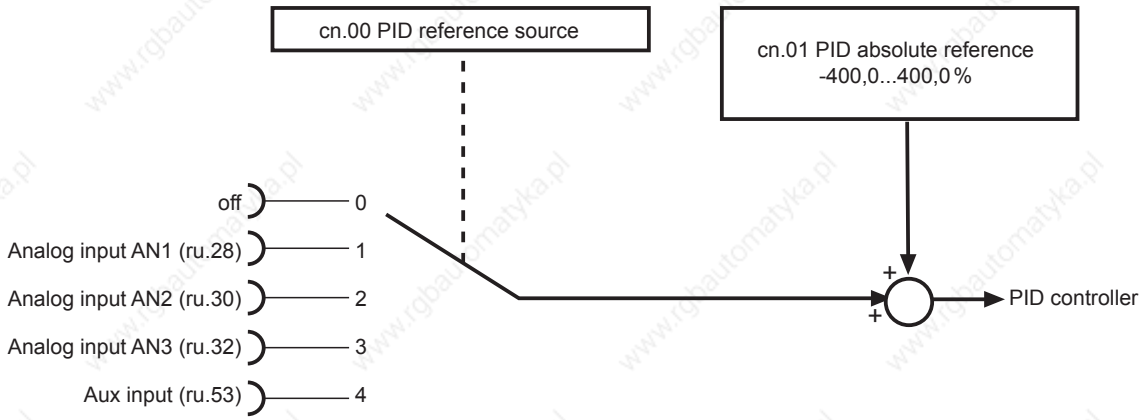

PID controller absolute reference (cn.01)

The absolute reference of the PID controller is preset in per cent with cn.01 within the range of -400,0… 400.0%. The parameter is set-programmable.

PID reference source (cn.00)

Parameter cn.00 determines which input supplies the additional reference. One can choose between following possibilities:

cn.00 PID reference source	
Value	Explanation
0	off (default)
1	Analog input AN1 (ru.28)
2	Analog input AN2 (ru.30)
3	Analog input AN3 (ru.32)
4	Aux input (ru.53)

If one of the analog channels is adjusted, the signals can be adapted with the analog amplifiers individually to the requirements (see chapter 6.2).

7.15.10.3 PID actual value

This block describes the PID controller actual value. The actual value is selected with the PID actual value source (cn.2).

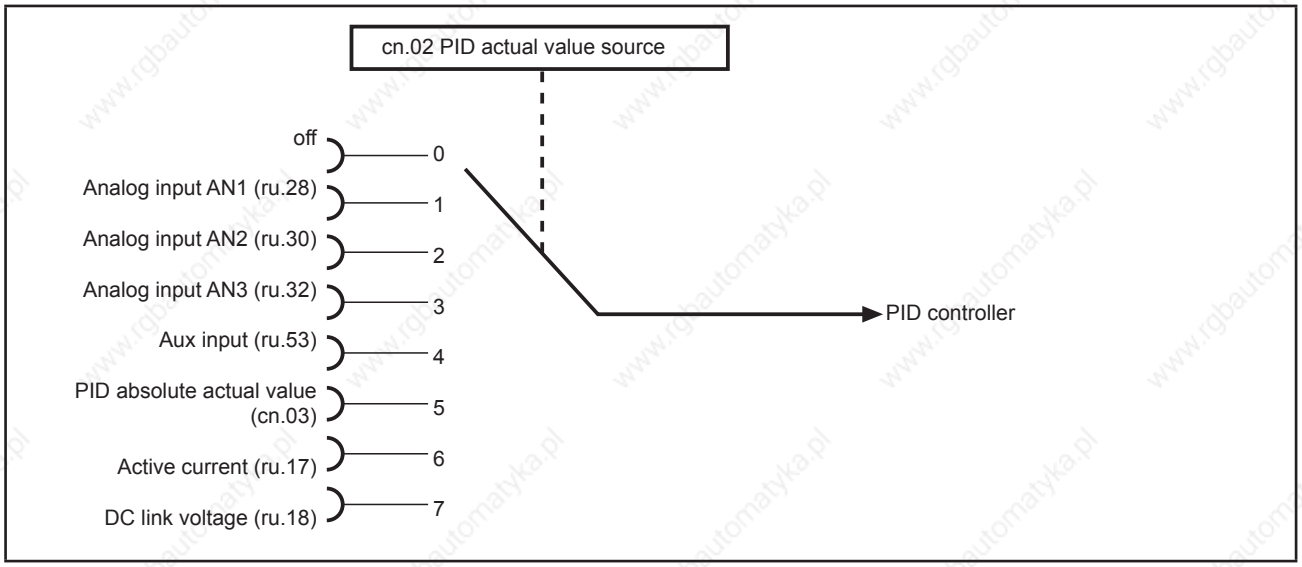

PID actual value source(cn.02)

The PID actual value source (cn.02) defines wherefrom the PID controller receives the actual value signal. Following signals are available:

cn.02 PID actual value source		
Value	Signal	Explanation
0	AN1	Signal of tjhe analog input 1 (see chapter 7.2)
1	AN2	Signal of the analog input 2 (see chapter 7.2)
2	AN3	Signal of the analog input 3 (see chapter 7.2)
3	AUX	Signal of the Aux input (see chapter 7.2)
4	cn. 03	PID absolute actual value is preset with cn.3 within the range of -400,0...400,0 %
5	Active current	The displayed active current -200...200 % in parameter ru.17 is used as actual value signal (100 % = Irated)
6	Utilization	The displayed utilization 0...255 % in parameter ru.13 is used as actual value signal (100 % = 100 %)
7	DC link voltage	The displayed DC link voltage 0...1000 V (1000 V = 100 %) in parameter ru.18 is used as actual value signal.

7.15.10.4 Application examples

Some application examples of the PID controller are given in the following part.

PID controller without precontrol (e.g. for pressure-, temperature-, liquid level closed-loop control)

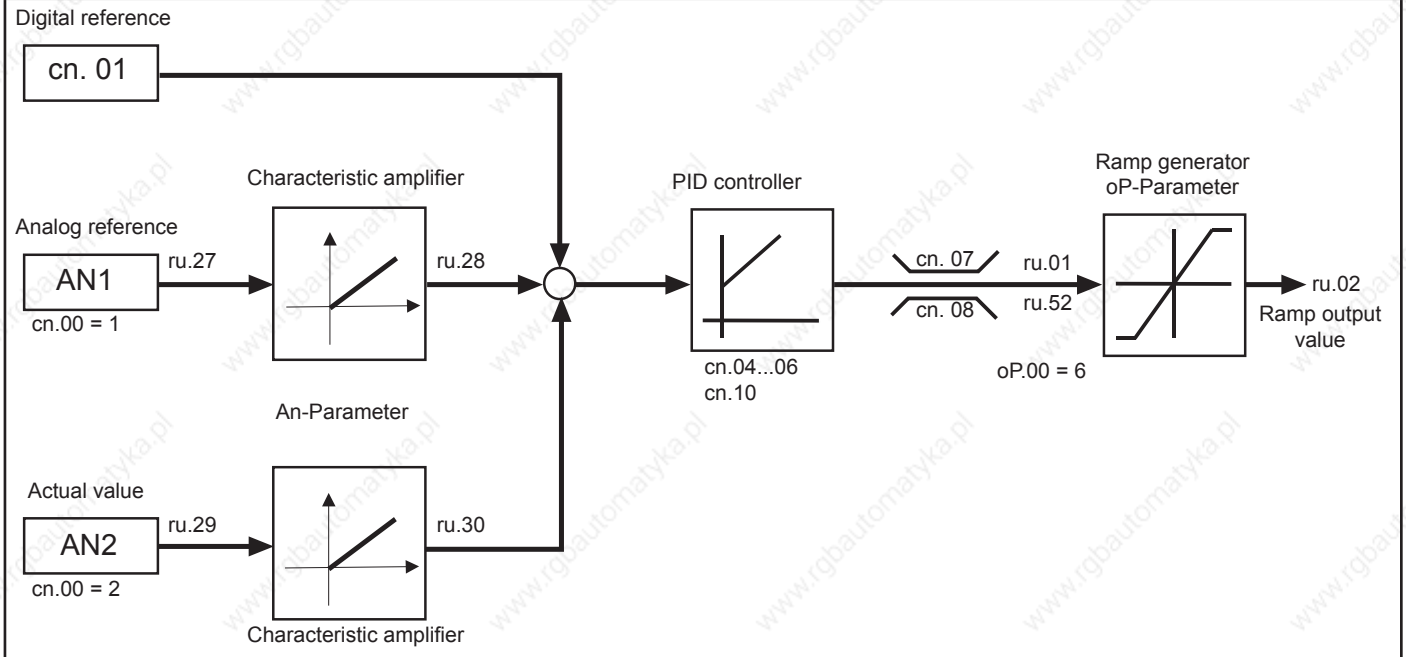

PID controller with precontrol (variant 1)

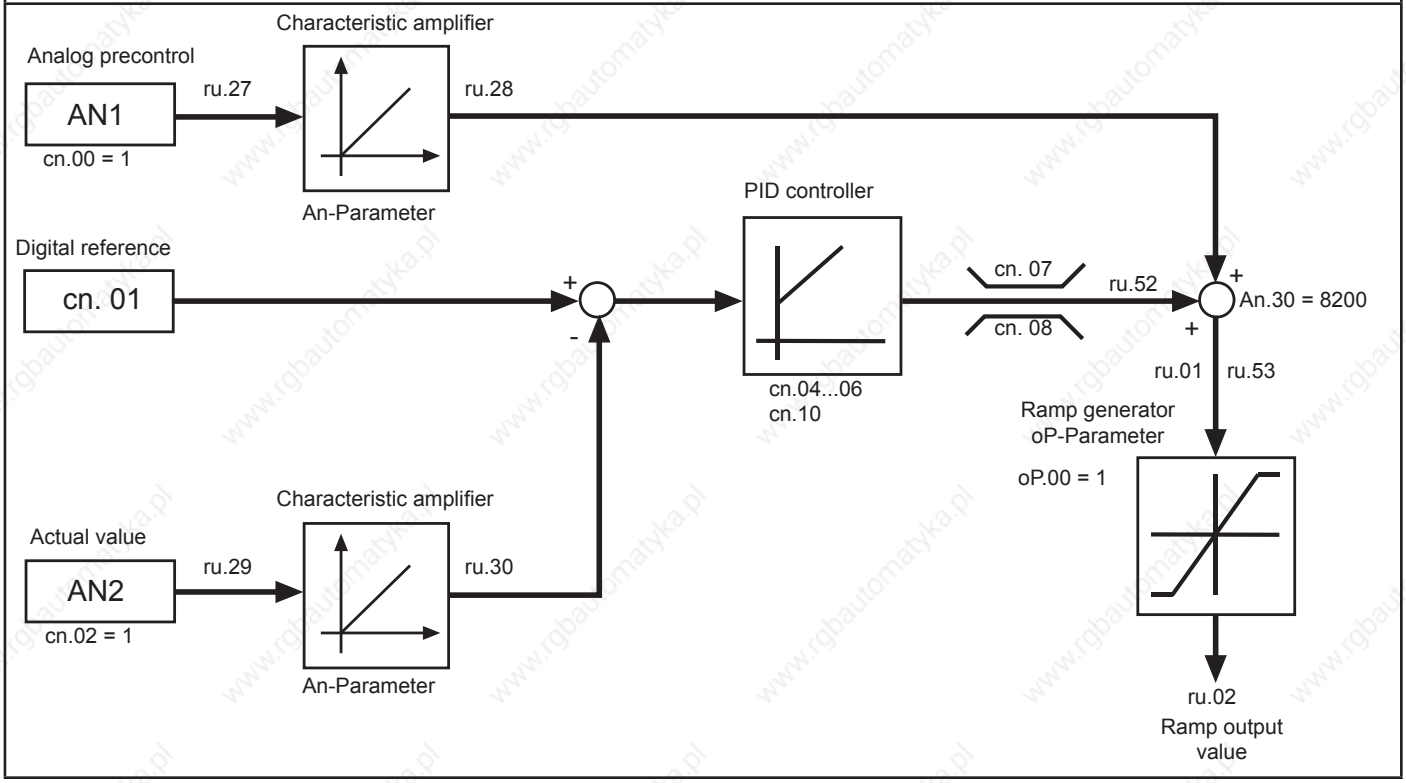

PID controller to the analog output

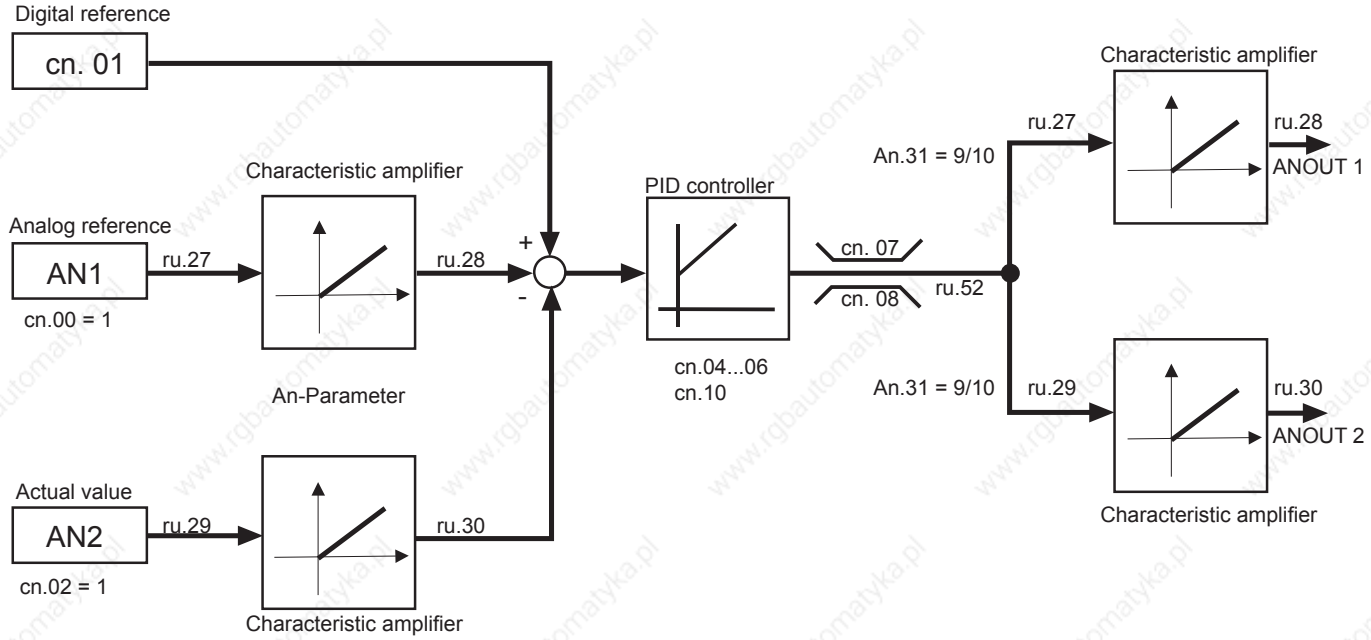

PID controller as active current- (torque-) control without precontrol

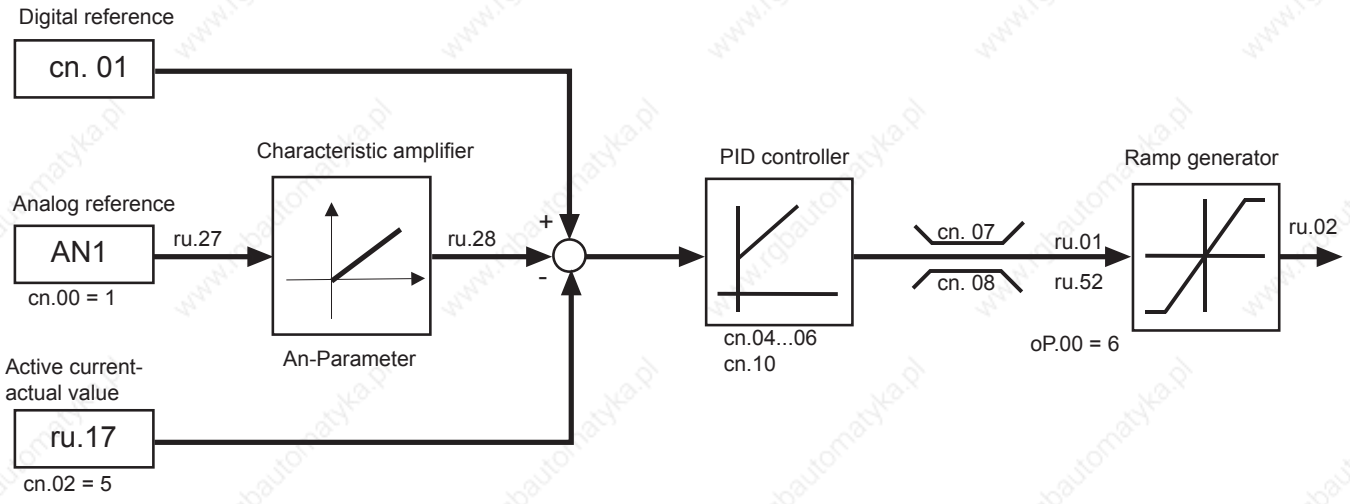

7

PID controller as active current- (torque-) control with precontrol

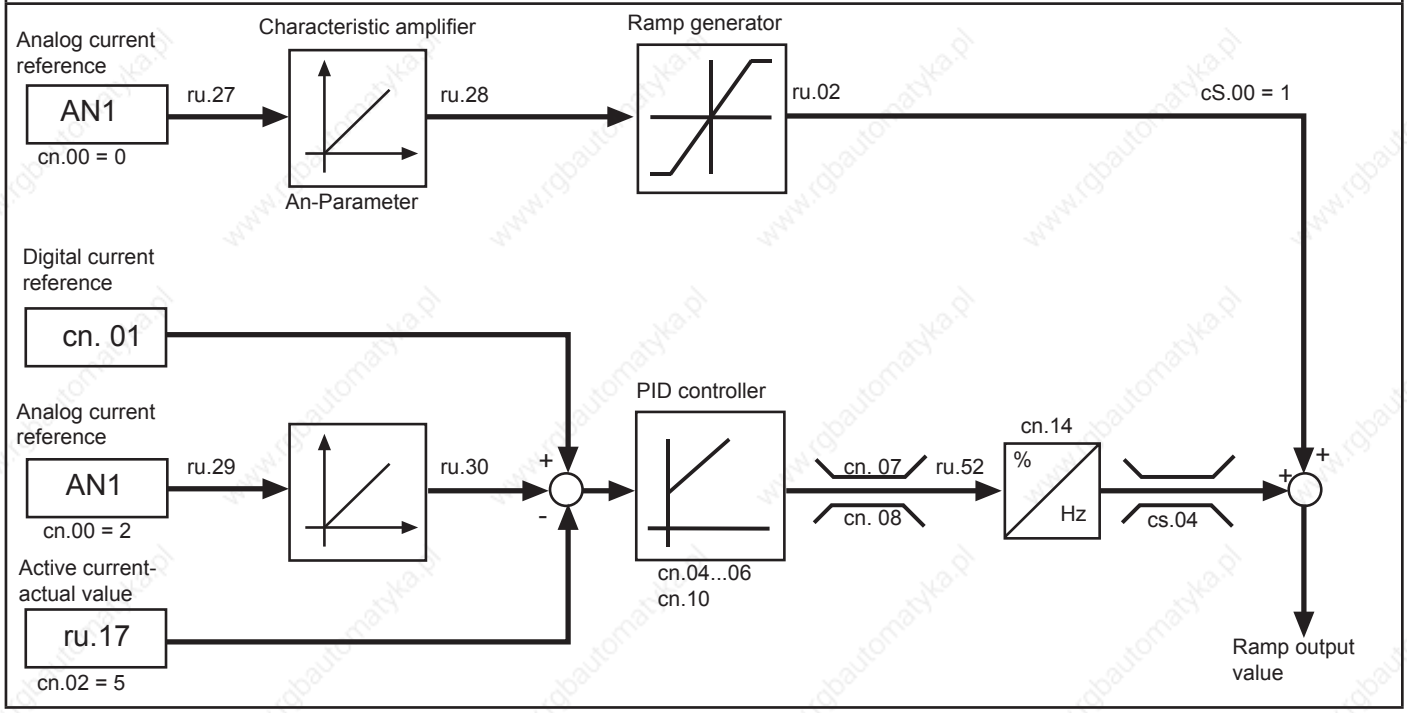

1. Introduction
2. Summary
3. Hardware
4. Operation
5. Selection of Operating Mode
6. Initial Start-up
7. Functions
8. Error Assistance
9. Project Design
10. Networks
11. Parameter Overview
12. Annex

7.1 Operating and appliance date
7.2 Analog in- and outputs I
7.3 Digital in- and outputs
7.4 Setpoint-, rotation- and ramp adjustment
7.5 Motor data and controller adjustments of the asynchronous motor
7.6 Motor data and controller adjustments of the synchronous motor
7.7 Speed control
7.8 Torque display and -limiting
7.9 Torque control
7.10 Current control, -limiting and switching frequencies
7.11 Speed measurement
7.12 Positioning and synchronous control
7.13 Protective functions
7.14 Parameter sets
7.15 Special functions
7.16 CP-Parameter definition

7.16.1 Survey ..... 7.16 - 3
7.16.2 Assignment of CP-parameters ..... 7.16 - 4
7.16.3 Example ..... 7.16 - 6
7.16.4 Display standardization ..... 7.16 - 7
7.16.5 Variable standardization ..... 7.16 - 9

7.16 CP-parameter definition

Once the development stage of a machine is completed, usually only a few parameters are required for the adjustment or the control of the inverter. To make the handling easier and the user documentation more understandable as well as to increase the safety of operation against unauthorized access, the possibility exists to create the one user surface with the CP-parameters. For that purpose 37 parameters (CP.00...CP.36) are available, 36 of them (CP.01...CP.36) are free for assignment.

7.16.1 Survey

Fig. 7.16.1 Definition structure

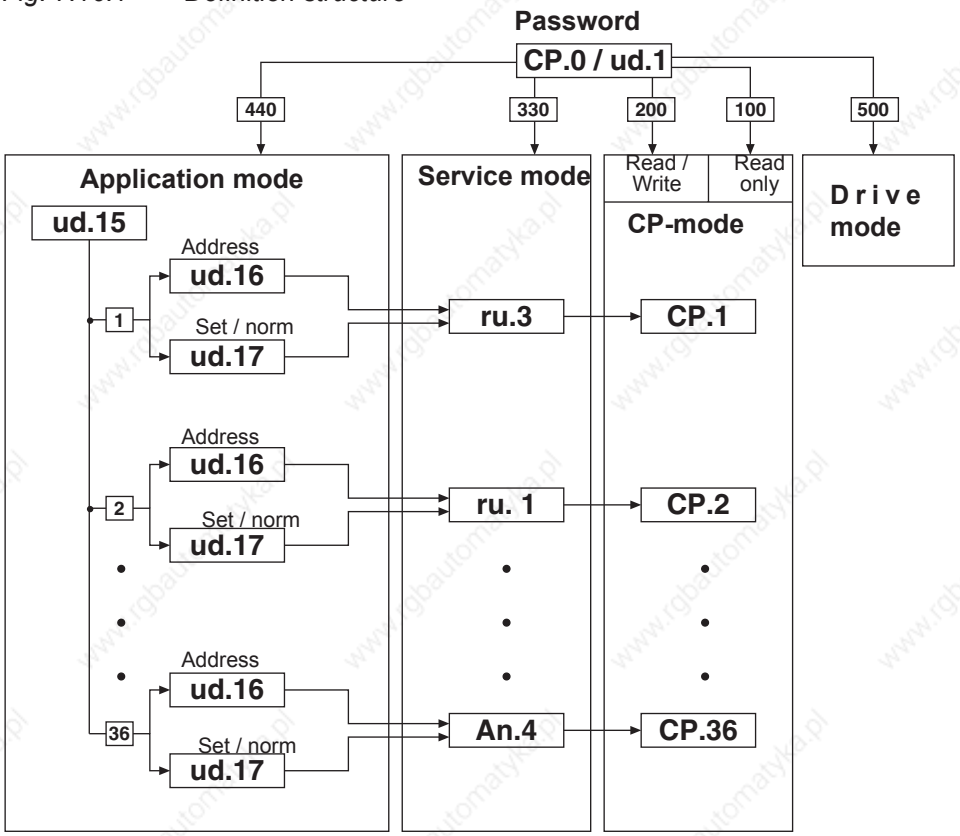

With ud.15 the CP-parameter that is to be edited is determined. With ud.16 and ud.17 the CP-parameter is defined through its address and the respective set. Depending on the adjusted password (CP.00 or ud.01)

- the adjusted parameter is directly displayed in the Service Mode
- the adjusted parameter is displayed as CP-parameter in the CP-Mode

Parameter CP.0 is not programmable, it always contains the password input. If the inverter is in the application mode or service mode ud.1 is used for the password input.
The parameters ud.15...17 as well as Fr.1 are not permitted as CP-parameter and are acknowledged as invalid parameter address. When entering an invalid parameter address the parameter is set to „oFF“ (-1). The appropriate CP-parameter is not displayed at this setting.

7.16.2Assignment of CP-parameters

CP selector (ud.15)

With ud.15 the CP-parameter to be programmed is adjusted in the range of 1...36. CP.00 is not adjustable.

CP address (ud.16)

ud.16 determines the parameter address (see chapter 11) of the parameter to be displayed:

ud.16	CP-address
-1:	Parameter not used
0...32767:	Parameter address

Invalid or not exist parameter addresses are ignored with „Data invalid“.

CP set norm (ud.17)

ud.17 determines the set, the addressing and the standardization of the parameter to be displayed. The parameter is bit-coded. The individual bits are decoded as follows:

Determination for direct set addressing

Bit 0...7 determines the set selection for direct set programming, i.e. all selected sets contain the same value, which is defined by the CP-parameter. If direct set programming (Bit 8, 9) is selected at least one set must be selected as otherwise an error message is triggered in the cp mode.

Bit									
7	6	5	4	3	2	1	0	Value	Set
0	0	0	0	0	0	0	0	0	no
0	0	0	0	0	0	0	1	1	0
0	0	0	0	0	0	1	0	2	1
0	0	0	0	0	1	0	0	3	0+1
...								...	...
1	1	1	1	1	1	1	1	255	All

-> Data invalid, if Bit 8 and 9 = 0

Determination of set addressing mode

Bit 8 and 9 determine the set addressing:

Bit			
8	9	Value	Function
0	0	0	direct set-addressing; the sets determined by Bit 0...7 are valid
0	1	256	current set; the current set is displayed / edited
1	0	512	indirect set addressing, the parameter set determined with the set pointer Fr.09 is displayed / edited
1	1	768	reserved

Display standardization

Bit 10...12 determine how the defined parameter value is displayed. Up to seven different user standardizations (see further on in this chapter) can be determined with the parameters ud.18...21.

Bit				
12	11	10	Value	Function
0	0	0	0	Use standard standardization of the parameter
0	0	1	1024	Display standardization of the parameters ud.18...21 from set 1
0	1	0	2048	Display standardization of the parameters ud.18...21 from set 2
	...		...	
1	1	1	7168	Display standardization of the parameters ud.18...21 from set 7

7.16.3 Example

As an example a user menu with the following features shall be programmed:

1. Display of current actual frequency (ru.03) in the respective set
2. Adjustment of a fixed frequency / fixed value (oP.21) in set 2
3. Adjustment of a fixed frequency / fixed value (oP.21) in set 3
4. Acceleration and deceleration time (oP.28/oP.30) for set 2 and 3
5. Energy saving factor (uF.07) shall be displayed in set 0 with display standardization 4

```
1.)   ud.15 = 1          ; CP.1
      ud.16 = 0203h      ; Parameter address for ru.3
      ud.17 = 256        ; Display in the active set

2.)   ud.15 = 2          ; CP.2
      ud.16   = 0315h    ; Parameter address for oP.21
      ud.17 = 4          ; Setting in set 2

3.)   ud.15 = 3          ; CP.3
      ud.16 = 0315h      ; Parameter address for oP.21
      ud.17 = 8          ; Setting in set 3

4.)   ud.15 = 4          ; CP.4
      ud.16 = 031Ch      ; Parameter address for oP.28
      ud.17 = 12         ; Setting in set 2 and 3

      ud.15 = 5          ; CP.5
      ud.16 = 031Eh      ; Parameter address for oP.30
      ud.17 = 12         ; Setting in set 2 and 3

5.)   ud.15 = 6          ; CP.6
      ud.16 = 0507h      ; Parameter address for uF.7
      ud.17 = 4097       ; Setting in set 0 and display standardization 4

6.)   ud.15 = 7          ; CP.7
      ud.16 = -1: off    ; CP.7 not displayed
      ud.17 = xxx        ; ud.17 no function
```

Adjust all other parameter sets to „off“, so that no indication occurs.
The acceptance of the values takes place only after Power-On-Reset of the operator.

7.16.4 Display standardization

The KEB COMBIVERT gives the user the possibility to define his own standardizations (e.g. km/h or bottles/ min) in the CP-Mode. The parameters ud.18...20 are used for conversion, ud.21 for specifying the method of calculation, the decimal places as well as the units indicated in KEB COMBIVIS.

7.16.4 Definition of own standardization

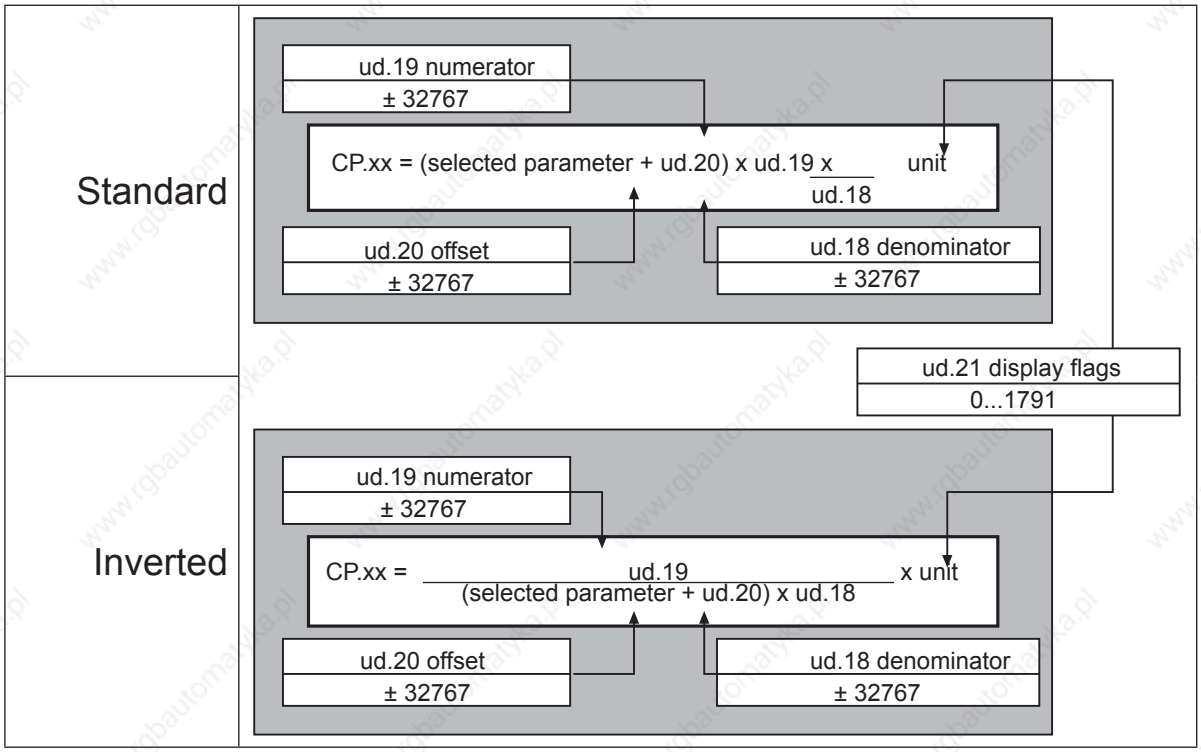

The unstandardized value or the standardized value/resolution is always used for the „selected parameter“!

ud.18 Divisor display norm

Adjusts the divisor in the range of ±32767 (default 1). The parameter is set-programmable.

ud.19 Multiplier display norm

Adjusts the multiplier in the range of ±32767 (default 1). The parameter is set-programmable.

ud.20 Offset display norm

Adjusts the offset in the range of ±32767 (default 0). The parameter is set-programmable.

ud.21 Control display norm

With ud.21 the calculation mode, the decimal places as well as the units indicated in KEB COMBIVIS are adjusted. The parameter is bit-coded and set-programmable. It is adjustable in the range of 0...1791.

Bit 12...15	Bit 11...8	Bit 7...6	Bit 5...0	ud.21
-	-	-	see table 1	unit
-	-	see table 2	-	Calculation mode
-	see table 3	-	-	Representation
free	-	-	-	-

Table 1 Unit (Bit 0...5)

Value	unit	Value	unit	Value	unit	Value	unit
0	no	16	km/h	32	K	48	lbin
1	mm	17	rpm	33	mW	49	in/s
2	cm	18	Hz	34	W	50	ft/s
3	M	19	kHz	35	kW	51	ft/min
4	km	20	mV	36	inc	52	ft/s²
5	g	21	V	37	%	53	ft/s³
6	kg	22	kV	38	KWh	54	MPH
7	us	23	mW	39	mH	55	KP
8	ms	24	W	40	-	56	psi
9	s	25	kW	41	-	57	°F
10	h	26	VA	42	In	58	-
11	Nm	27	kVA	43	ft	59	-
12	kNm	28	mA	44	yd	60	-
13	m/s	29	A	45	oz	61	-
14	m/s^2	30	kA	46	lb	62	-
15	m/s^3	31	°C	47	lbft	63	-

Table 2 Calculation mode (Bit 6...7)

Value	Function
0	(selected parameter + ud.20) x $\frac{ud.19}{ud.18}$ = CP.xx
64	$\frac{ud.19}{(selected\ parameter + ud.20) \times ud.18}$ = CP.xx
-	free

The unstandardized value is always used for the „selected parameter“!
unstandardized value = standardized value / resolution

Table 3 Representation (Bit 8...11)

Value	Representation
0	0 decimal places
256	1 decimal place
512	2 decimal places
768	3 decimal places
1024	4 decimal places
1280	variable decimal places
1536	Hexadecimal
-	free

7

Example

The actual frequency shall be displayed in CP.1 in rpm. Display standardization from set 4.

```
ud.15 = 1              ; CP.1
ud.16 = 0203h          ; Actual frequency ru.3
ud.17 = 4352           ; Display in current set, display standardization from set 4

Set 4 ud.18 = 80       ; Conversion from 1/80 Hz into rpm without pole pair number
Set 4 ud.19 = 60
Set 4 ud.20 = 0; no Offset
Set 4 ud.21 = 17       ; Unit rpm; direct calculation mode;no decimal place
```

7.16.5 Variable standardization

Target of these parameters is to allocate a set of parameter addresses to the control. By this way arbitrary inverter parameters with self-specified standardizations are addressed.

Required parameters

The following configuration parameters must be available for one programmable parameter.

- Target address
- Characteristics

The following settings can be made in the characteristics:

Bit 0-7	Target/source set with direct addressing	
Bit 8-11	Mode of set-addressing:	
	0:	Target/source set of bit 0-7
	1:	Target/source set = current set
	2:	Target/source set = fr.09
	3:	Accept target/source setting from PP-Para telegram
	4...15:	free
Bit 12-13	Conversion mode	
	0:	standard
	1:	Invers
	2:	free
	3:	free
Bit 14	Multiplier / write variable	
	0:	no
	1:	yes
Bit 15	Shifter / write variable	
	0:	no
	1:	yes
Bit 16	Multiplier / reading variable	
	0:	no
	1:	yes
Bit 17	Shifter / reading variable	
	0:	no
	1:	yes
Bit 18	Offset variable	
	0:	no
	1:	yes
Bit 19-20	Read/Write rights	
	0:	Read/ Write
	1:	Read-Only

The configuration parameters are inserted in the Ud-group and indirect addressed like the configuration parameters of the CP parameters over a selector.

The following parameters result from it:

Ud.22:	PP selector	Value range: 0...47
Ud.23:	PP address	Value range: -1(off)...7FFFH, only available and permitted addresses are acepted
Ud.24:	PP properties	Value range: 1...1023
Ud.25:	PP write multiplier	Value range: +/- 32767
Ud.26:	PP write shifter	Value range: 0..48
Ud.27:	PP read multiplier	Value range: +/- 32767
Ud.28:	PP read shifter	Value range: 0..48
Ud.29:	PP offset	Value range: +/- 2^31 -1
Ud.30:	PP upper limit	Value range: +/- 2^31 -1
Ud.31:	PP lower limit	Value range: +/- 2^31 -1

Example

Reading of the prog. parameters

The values of the source parameter in the selected sets are compared. If all values are equal then this value is displayed, otherwise „data invalid“ is displayed. If no source parameter is defined, „data invalid“ is displayed.

Writing of the prog. parameters

The write value is written into all selected sets of the target parameter.
The following characteristics of the target parameter are checked:
Exceeding the limits: „invalid data“
Generally write protection: „write protected parameters“
Wwrite protection at switch on modulation: „operation not possible“
Write protection in the active set: „invalid set“
Password: ‘Password invalid‘ is only displayed at parameters with supervisor-password
„Data invalid“ is always displayed if no source parameter is defined.

Invalid target/source parameters

Some parameters cannot be adjusted as target/source parameter in ud.23. There are all parameters, which are not permissible as CP parameter (characteristics 2 bits 15 = 1) or process date (characteristics 1 bit 28 = 1), as well as the prog. parameters itself. Explanation:

- all sy parameters exception sy.02, 06, 07, 32, 41-44, 50-53
- uf.12-14
- all ud parameters exception ud.01, 09
- fr.01
- in.20,21,31-33
- Ec.00,10,36-38
- aa.00-13, 26-29, 34-41
- pp.00-47

Prog. parameters as process data

The prog. parameters can be used as process data. Restrictions occur only if a prog. parameter is assigned with a process date invalid parameter. In this case the process date is switched off and the adjusted address in the corresponding sy parameter is negated, in order to mark this process date as switched off. This applies also if the prog. parameter is switched off (ud.23 = -1).
A prog. parameter is additionally invalid as process write date, in case the target parameter is write protected (generally, when the modulation is switched on, in active set).
The set definition of the process date is always valid as set source for process data (e.g. sy.17 for process read date 1). The adjustment in ud.24 is without meaning.

Prog. parameters as scope data

The prog. parameters can be used as scope data. If the selected prog. parameter is switched off (ud.23 = -1) the scope date is switched off and the adjusted address in the corresponding sy-parameter is negated, in order to mark this scope date switched off.
Since the prog. parameters have the type LONG they cannot be assigned on Scope channel 3 and 4, without Combivis leaves the fast scope mode.
The set definition of the process date is always valid as set source for process data (e.g. sy.34 for scope date 1). The adjustment in ud.24 is without meaning.

1. Introduction
2. Summary
3. Hardware
4. Operation
5. Selection of Operating Mode
6. Initial Start-up
7. Functions
8. Error Assistance — 8.1 Troubleshooting — 8
9. Project Design
10. Networks
11. Parameter Overview
12. Annex

8.1.1 General ..... 8.1 - 3
8.1.2 Error messages and their causes ..... 8.1 - 3

8. Error Assistance

The following chapter shall help you to avoid errors as well as help you to determine and remove the cause of errors on your own. There is the error messages of **all** KEB COMBIVERT F5 represented, although depending upon equipment and execution some are missing.

8.1 Troubleshooting

8.1.1 General

If error messages or malfunctions occur repeatedly during operation, the first thing to do is to pinpoint the exact error. To do that go through the following checklist:

- Is the error reproducable?
For that reset the error and try to repeat it under the same conditions. If the error can be reproduced, the next step is to find out during which operating phase the error occurs.

- Does the error occur during a certain operating phase (e.g. always during acceleration)?
If so, consult the error messages and remove the causes listed there.

- Does the error occur or disappear after a certain time?
That may be an indication for thermal causes. Check, whether the inverter is used in accordance to the ambient conditions and that no moisture condensation takes place.

8.1.2 Error messages and their causes

At KEB COMBIVERT error messages are always represented with an "E." and the appropriate error in the display. Error messages cause the immediate deactivation of the modulation. Restart possible only after reset. Malfunction are represented with an " A." and the appropriate message. Reactions to malfunctions can vary. Status messages have no addition. The status message shows the current operating status of the inverter (e.g. forward constant run, standstill etc.).
In the following the display and their cause are described.

Display	COMBIVIS	Value	Meaning
	Status messages		
bbL	base block	76	Power modules for motor de-excitation locked
bon	close brake	85	Brake control, brake engaged (see chapter 6.9)
boFF	open brake	86	Brake control, brake released (see chapter 6.9)
Cdd	calculate drive	82	Measurement of the motor stator resistance
dcb	DC brake	75	Motor is decelerated by a DC-voltage at the output.
dLS	low speed / DC brake	77	Modulation is switched off after DC braking (see chapter 6.9 “DC braking”).
FAcc	forward acceleration	64	Acceleration with the adjusted ramps in clockwise direction of rotation.
Fcon	forward constant	66	Acceleration / deceleration phase is completed and it is driven with constant speed / frequency in clockwise direction of rotation.
FdEc	forward deceleration	65	It is stopped with the adjusted ramp times in clockwise direction of rotation.

further on next side

Display	COMBIVIS	Value	Meaning
HCL	hardware current limit	80	The message is output if the output current reaches the hardware current limit.
LAS	LA stop	72	This message is displayed if during acceleration the load is limited to the adjusted load level.
LdS	Ld stop	73	This message is displayed if during deceleration the load is limited to the adjusted load level or the DC-link current to the adjusted voltage level.
LS	low speed (mod. off)	70	No direction of rotation pre-set, modulation is off.
nO_PU	power unit not ready	13	Power circuit not ready or not identified by the control.
noP	no operation	0	Control release (terminal ST) is not switched.
PA	positioning active	122	This message is displayed during a positioning process.
PLS	low speed / power off	84	No modulation after Power-Off.
PnA	position not reachable	123	The specified position cannot be reached within the pre-set ramps. The abort of the positioning can be programmed.
POFF	power off function	78	Depending on the programming of the function (see chapter 6.9 „Power-off Function“) the inverter restarts automatically upon system recovery or after a reset.
POSI	positioning	83	Positioning function active (F5-G).
rAcc	reverse acceleration	67	Acceleration with the adjusted ramp times in anti-clockwise direction of rotation.
rcon	reverse constant	69	Acceleration / deceleration phase is completed and it is driven with constant speed / frequency in clockwise direction of rotation.
rdEc	reverse deceleration	68	It is stopped with the adjusted ramp times in anti-clockwise direction of rotation.
rFP	ready for positioning	121	The drive signals that it is ready to start the positioning process.
SLL	stall	71	This message is displayed if during constant operation the load is limited to the adjusted current limit.
SrA	search for ref. active	81	Search for reference point approach active.
SSF	Speed search	74	Speed search function active, that means that the inverter attempts to synchronize onto a running down motor.
Stop	quick stop	79	The message is output if as response to a warning signal the quick-stop function becomes active.
PrF	prot. rot. for.	124	protected direction of rotation forward
Prr	prot. rot. rev.	125	protected direction of rotation reverse
IPnA	pos.not accessib.ignored	126	Position not accessible ignored
Cddr	calc. drive data ready	127	Calculation drive data ready
SrF	reference found	128	Reference point found (only special version)
	Error messages		
E. br	Error! Brake control	56	Error: can occur in the case of switched on brake control (see chapter 6.9.5), if
			if the load during the start is below the minimum load level (Pn.43) or the missing of a motor phase is recognized.
			the load is too high and the hardware current limit is reached.
E.buS	Error! Watchdog	18	Error: Adjusted monitoring time (Watchdog) of communication between operator and PC / operator and inverter has been exceeded.
E.Cdd	Error! calc. drive data	60	Error: During the automatic motor stator resistance measurement.
E.co1	Error! counter overrun 1	54	Counter overflow encoder channel 1

further on next side

Display	COMBIVIS	Value	Meaning
E.co2	Error! counter overrun 2	55	Counter overflow encoder channel 2
E.dOH	Error! drive overheat	9	Error: Overtemperature of motor PTC. Error can only be reset at E.ndOH, if PTC is again low-resistance. Causes:
			Resistance at terminals T1/T2 >1650 Ohm
			Motor overloaded
			Line breakage to the temperature sensor
E.dri	Error! driver relay	51	Error: Driver relay. Relay for driver voltage on power circuit has not picked up even though control release was given.
E.EEP	Error! EEPROM defective	21	After reset the operation is again possible (without storage in the EEPROM)
E. EF	Error! ERROR external fault	31	Is triggered, if a digital input is being programmed as external error input and trips.
E.EnC	Error! encoder channel	32	Cable breakage at resolver or incremental encoder
E.Hyb	Error! Encoder interface	52	Invalid encoder interface identifier.
E.HybC	Error! hybrid changed	59	Error: Encoder interface identifier has changed, it must be confirmed over Ec.0 or Ec.10.
E.iEd	Error! input error detect	53	Hardware error at NPN-/PNP change-over or at start/stop measurement.
E.InI	Error! MFC not booted	57	MFC not booted
E.LSF	Error! load shunt fault	15	Error: Load-shunt relay has not picked up, occurs for a short time during the switch-on phase, but must automatically be reset immediately. If the error message remains the following causes may be applicable:
			load-shunt defective
			input voltage wrong or too low
			high losses in the supply cable
			braking resistor wrongly connected or damaged
			braking module defective
E.ndOH	no ERROR drive overheat	11	Motor temperature switch or PTC at the terminals T1/T2 is again in the normal operating range. The error can be reset now.
E.nOH	no E. over heat pow.mod.	36	Temperature of the heat sink is again in the permissible operating range. The error can be reset now.
E.nOHI	no ERROR overheat int.	7	No longer overheating in the interior E.OHI, interior temperature has fallen by at least 3°C
E.nOL	no ERROR overload	17	No more overload, OL-counter has reached 0%; after the error E.OL a cooling phase must elapse. This message appears upon completion of the cooling phase. The error can be reset now. The inverter must remain switched on during the cooling phase.
E.nOL2	no ERROR overload 2	20	The cooling time has elapsed. The error can be reset.
E.OC	Error! overcurrent	4	Occurs, if the specified peak current is exceeded. Causes:
			acceleration ramps too short
			the load is too big at switched off acceleration stop and switched off constant current limit
			short-circuit at the output
			ground fault
			deceleration ramp too short
			motor cable too long
			EMC
			DC brake at high ratings active (see 6.9.3)

further on next side

8

Display	COMBIVIS	Value	Meaning
E.OH	Error! overheat pow.mod.	8	Overtemperature of power module. Error can only be reset at E.nOH. Causes:
			insufficient air flow at the heat sink (soiled)
			ambient temperature too high
			ventilator clogged
E.OH2	Error! motor protection	30	Electronic motor protective relay has tripped.
E.OHI	Error! overheat internal	6	Overheating in the interior: error can only be reset at E.nOHI, if the interior temperature has dropped by at least 3 °C.
E.OL	Error! overload (Ixt)	16	Overload error can only be reset at E.nOL, if OL-counter reaches 0% again. Occurs, if an excessive load is applied longer than for the permissible time (see technical data).Causes:
			poor controller adjustment
			mechanical fault or overload in the application
			inverter not correctly dimensioned
			motor wrongly wired
			encoder defective
E.OL2	Error! overload 2	19	Occurs if the standstill constant current is exceeded (see technical data and overload characteristics). The error can only be reset if the cooling time has elapsed and E.nOL2 is displayed.
E.OP	Error! overvoltage	1	Voltage in the DC-link circuit too high. Occurs if the DC-link voltage exceeds the permissible value. Causes:
			poor controller adjustment (overshooting)
			input voltage too high
			interference voltages at the input
			deceleration ramp too short
			braking resistor defective or too small
E.OS	Error! over speed	58	Real speed is bigger than the max. output speed.
E.PFC	Error! PFC	33	Error in the power factor control
E.PrF	Error! prot. rot. for.	46	The drive has driven onto the right limit switch. Programmed response “Error, restart after reset” (see chapter 6.7 “Response to errors or warning messages”).
E.Prr	Error! prot. rot. rev.	47	The drive has driven onto the left limit switch. Programmed response “Error, restart after reset” (see chapter 6.7 “Response to errors or warning messages”).
E. Pu	Error! power unit	12	Error: General power circuit fault
E.Puci	Error! power circuit unknown	49	Error: During the initialization the power circuit could not be recognized or was identified as invalid.
E.Puch	Error! power unit changed	50	Error: Power circuit identification was changed; with a valid power circuit this error can be reset by writing to SY.3. If the value displayed in SY.3 is written, only the power-circuit dependent parameters are reinitialized. If any other value is written, then the default set is loaded. On some systems after writing Sy.3 a Power-On-Reset is necessary.
E.PUCO	Error! power circuit communication	22	Error: Parameter value could not be written to the power circuit. Acknowledgement from LT <> OK
E.PUIN	Error! power circuit coding	14	Error: Software version for power circuit and control card are different. Error cannot be reset (only at F5-G B-housing)
E.SbuS	Error! bus synchron	23	Sychronization over sercos-bus not possible. Programmed response “Error, restart after reset”.

further on next side

Display	COMBIVIS	Value	Meaning
E.SEt	Error! set	39	It has been attempted to select a locked parameter set. Programmed response “Error, restart after reset”.
E.SLF	Error! Software limit switch forward	44	The target position lies outside of the limit defined with the right software limit switch. Programmed response “Error, restart after reset”.
E.SLr	Error! software limit switch reverse	45	The target position lies outside of the limit defined with the left software limit switch. Programmed response “Error, restart after reset”.
E. UP	Error! underpotential	2	Error: Undervoltage (DC-link circuit). Occurs, if DC-link voltage falls below the permissible value. Causes:
			input voltage too low or unstable
			inverter rating too small
			voltage losses through wrong cabling
			the supply voltage through generator / transformer breaks down at very short ramps
			at F5-G B housing E.UP is also displayed if no communication takes place between power circuit and control card.
			jump factor (Pn.56) too small
			if a digital input was programmed as external error input with error message E.UP (Pn.65).
E.UPh	Error! Phase failure	3	One phase of the input voltage is missing (ripple-detection)
	Warning Messages		
A.buS	Warning! Watchdog	93	Warning: Watchdog for communication between operator/control card or operator/PC has responded. The response to this warning can be programmed.
A.dOH	Warning! drive overheat	96	The motor temperature has exceeded an adjustable warning level. The switch off time is started. The response to this warning can be programmed. This warning can be generated only with a special power circuit.
A. EF	Warning! ERROR external fault	90	This warning is triggered via an external input. The response to this warning can be programmed.
A.ndOH	no ABN.STOP drive overheat	91	The motor temperature is again below the adjusted warning level. The switch off time is stopped.
A.nOH	no ABN.STOP overheat pow. mod.	88	The heat sink temperature is again below the adjusted warning level.
A.nOHI	no ABN.STOP overheat internal	92	The temperature in the interior of the inverter is again below the warning threshold.
A.nOL	no ABN.STOP overload	98	Warning: no more overload, OL counter has reached 0 %, warning „overload" can be reset.
A.nOL2	no ABN.STOP overload 2	101	The cooling time after “Warning! Overload during standstill" has elapsed. The warning message can be reset.
A. OH	Warning! overheat pow.mod.	89	A level can be defined, when it is exceeded this warning is output. Furthermore the response to this warning can be programmed.
A.OH2	Warning! motor protection	97	Warning: electronic motor protective relay has tripped. The response to this warning can be programmed.
A.OHI	Warning! overheat internal	87	The temperature in the interior of the inverter lies above the permissible level. The switch off time was started. The programmed response to this warning message is executed.

further on next side

Display	COMBIVIS	Value	Meaning
A. OL	Warning! overload	99	A level between 0 and 100 % of the load counter can be adjusted, when it is exceeded this warning is output. The response to this warning can be programmed.
A.OL2	Warning! overload 2	100	The warning is output when the standstill continuous current is exceeded (see technical data and overload characteristics). The response to this warning can be programmed. The warning message can only be reset after the cooling time has elapsed and A.nOL2 is displayed.
A.PrF	Warning! prot. rot. for.	94	The drive has driven onto the right limit switch. The response to this warning can be programmed.
A.Prr	Warning! prot. rot. rev.	95	The drive has driven onto the left limit switch. The response to this warning can be programmed.
A.SbuS	Warning! Bus synchron	103	Sychronization over sercos-bus not possible. The response to this warning can be programmed.
A.SEt	Warning! set	102	It has been attempted to select a locked parameter set. The response to this warning can be programmed.
A.SLF	Warning! Software limit switch forward	104	The target position lies outside of the limit defined with the right software limit switch. The response to this warning can be programmed.
A.SLr	Warning! software limit switch reverse	105	The target position lies outside of the limit defined with the left software limit switch. The response to this warning can be programmed.

1. Introduction
2. Summary
3. Hardware
4. Operation
5. Selection of Operating Mode
6. Initial Start-up
7. Functions
8. Error Assistance
9. Project Design
10. Networks
11. Parameter Overview
12. Annex

9.1 General designs

9.1.1 Control cabinet design calculation ..... 9.1 - 3
9.1.2 Design of braking resistors..... 9.1 - 4
9.1.3 Cables and fuses..... 9.1 - 6

9. Project Design

The following chapter shall assist you in the planning stage of applications.

9.1 General designs

9.1.1 Control cabinet design calculation

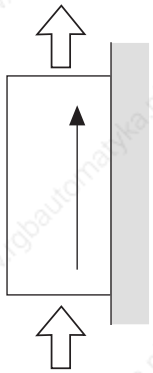

Direction of cooling fins

Minimum distances

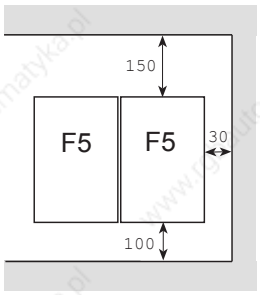

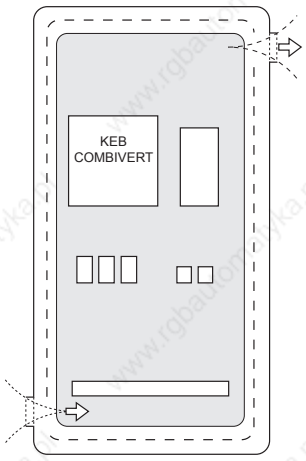

Warm air outlet

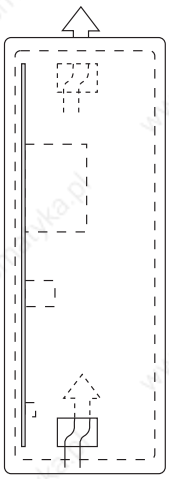

Cool air inlet

Control cabinet surface

Calculation of control cabinet surface:

$$A = \frac{P_V}{\Delta T \bullet K} \quad [m^2]$$

Air flow rate with fan cooling:

$$V = \frac{3{,}1 \bullet P_V}{\Delta t} \quad [m^3/h]$$

A	=	Control cabinet surface	[m²]
Δt	=	temperature differential (standard value = 20K)	[K]
K	=	coefficient of heat transmission (default value = 5)	
P_V		power loss (see technical data)	
V	=	air flow rate of fan	

For more details please refer to the catalogs of the control cabinet manufacturers.

9.1.2 Design of braking resistors

The KEB COMBIVERT fitted with an external braking resistor or an external braking option is suitable for a limited 4-quadrant operation. The braking energy, refeed into the DC-bus at generatoric operation, is dissipated over the braking transistor to the braking resistor.
The braking resistor heats up during the braking process. If it is installed in a control cabinet sufficient cooling of the control cabinet interior and sufficient distance to the KEB COMBIVERT must be observed.

Different braking resistors are available for the KEB COMBIVERT. Please refer to the next page for the corresponding formula and restrictions (valid range).

1. Preset desired braking time.

2. Calculate braking time without braking resistor (tBmin).

3. If the desired braking time shall be smaller than the calculated time, it is necessary to use a braking resistor. (t_B < tBmin)

4. Calculate braking torque (MB). Take the load torque into account at the calculation.

5. Calculate peak braking power (PB). The peak braking power must always be calculated for the worst case (n_{max} to standstill).

6. Selection of braking resistor:
   a) $\underline{PR}_{> PB}$
   b) PN is to be selected according to the cycle time(ED).

The braking resistors may be used only for the listed unit sizes. The maximum cyclic duration of a braking resistor shall not be exceeded.

6 % ED =	maximum braking time	8 s
25 % ED =	maximum braking time	30 s
40 % ED =	maximum braking time	48 s

For a longer cyclic duration time special designed braking resistors are necessary. The continuous output of the braking transistor must be taken into consideration.

7. Check, whether the desired braking time is attained with the braking resistor (tBmin).

Restriction:
Under consideration of the rating of the braking resistor and the brake power of the motor, the braking torque may not exceed 1,5times of the rating torque of the motor (see formula).
When utilizing the maximum possible braking torque the frequency inverter must be dimensioned for the higher current.

Braking time *DEC*

The braking time ***DEC*** is adjusted at the frequency inverter. If it is chosen too small the KEB COMBIVERT switches off automatically and the error message ***OP*** or ***OC*** appears. The approximate braking time can be determined according to following formula.

Formula

1. Braking time without braking resistor

$$t_{Bmin} = \frac{(J_M + J_L) \cdot (n_1 - n_2)}{9{,}55 \cdot (K \cdot M_N + M_L)}$$

Valid range: $n_{1 > nN}$
(Field weakening range)

2. Braking torque (necessary)

$$M_B = \frac{(J_M + J_L) \cdot (n_1 - n_2)}{9{,}55 \cdot t_B} - M_L$$

Condition: $M_B \leq 1.5 \cdot M_N$
$f \leq 70$ Hz

3. Peak braking power

$$P_B = \frac{M_B \cdot n_1}{9{,}55}$$

Condition: $P\underline{B}_{< PR}$

4. Braking time with braking resistor

$$t_{Bmin} * \frac{(J_M + J_L) \cdot (n_1 - n_2)}{9{,}55 \cdot K \cdot M_N + M_L + \frac{P_R \cdot 9{,}55}{(n_1 - n_2)}}$$

Valid range: $n_{1 > nN}$

Condition: $\frac{P_R \cdot 9{,}55}{(n_1 - n_2)} \leq M_N \cdot (1{,}5 - K)$

$f \leq 70$ Hz
$P_B \leq P_R$

K= 0,25 for motors upto 1,5 kW
0,20 for motors 2,2 upto 4 kW
0,15 for motors 5,5 upto 11 kW
0,08 for motors 15 upto 45 kW
0,05 for motors > 45 kW

J_M	=	mass moment of inertia motor	[kgm²]
J_L	=	mass moment of inertia load	[kgm²]
n_1	=	motor speed prior to deceleration	[rpm]
n_2	=	motor speed after deceleration (standstill = 0 rpm)	[rpm]
n_N	=	rated motor speed	[rpm]
M_N	=	rated motor torque	[Nm]
M_B	=	braking torque (necessary)	[Nm]
M_L	=	load torque	[Nm]
t_B	=	braking torque (necessary)	[s]
t_{min}	=	minimum braking time	[s]
t_Z	=	cycle time	[s]
P_B	=	peak braking power	[W]
P_R	=	peak power of braking resistor	[W]

9

Cyclic duration factor (cdf)

Cyclic duration factor for cycle time $t_Z \leq 120$ s

$$ED = \frac{t_B}{t_Z} \cdot 100\ \%$$

Cyclic duration factor for cycle time $t_Z > 120$ s

$$ED = \frac{t_B}{120\,s} \cdot 100\ \%$$

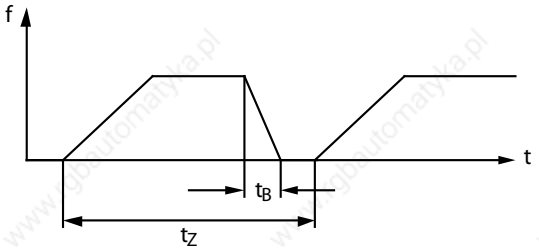

9.1.3 Cables and fuses

By means of this section you can check whether you can still optimize your machine with regard to the material usage. The specifications are derived for the DIN VDE 0298 Part 4. The values apply approximately and only for the intended operation. In marginal cases it must be always proceed according to the standard described obove.
The following table shows the current capability of 3 and/or 5 core PVC cables (i.e. 2 and/or 3 loaded cores) in dependence with the ambient temperature. The current is to be laid out to the input current of the frequency inverter.

The use of special cables or the way of laying the cables allows even higher currents (see DIN VDE 0298 Part 4). The motor cable must correspond to the cross-section of the mains cable.
If in case of long lines (>30m) still maximum torque is required at the motor shaft, the cable should be dimensioned for the next larger cross-section in order to reduce line resistances.

Mains fuses are to be designed for the rated input current of the inverter. The current/time-characteristic of the fuse must be slow-acting in order to avoid premature tripping when the power reserves of the inverter are used.

1. Introduction
2. Summary
3. Hardware
4. Operation
5. Selection of Operating Mode
6. Initial Start-up
7. Functions
8. Error Assistance
9. Project Design
10. Networks
11. Parameter Overview
12. Annex

10.1 Network components

10.1.1 Available hardware ..... 10.1 - 3
10.1.2 RS232-cable PC / operator 00.58.025-001D ..... 10.1 - 3
10.1.3 HSP5-cable / control board 00.F5.0C0-0010 ..... 10.1 - 4
10.1.4 Interface operator F5 00.F5.060-2000 ..... 10.1 - 4
10.1.5 Profibus-DP operator F5 00.F5.060-3000 ..... 10.1 - 5
10.1.6 InterBus operator F5 00.F5.060-4000 / 4001 ..... 10.1 - 6
10.1.7 CanOpen operator F5 00.F5.060-5010 / 5011 ..... 10.1 - 7
10.1.8 Sercos operator 00.F5.060-6000 ..... 10.1 - 8
10.1.9 Bus parameter ..... 10.1 - 9
10.1.9.1 Inverter address (SY.06) ..... 10.1 - 9
10.1.9.2 Baud rate ext. bus (SY.07) ..... 10.1 - 9
10.1.9.3 Baud rate int. bus (SY.11) ..... 10.1 - 9
10.1.9.4 Watchdog time (Pn.06) ..... 10.1 - 9
10.1.9.5 Response to E.bus (Pn.05) ..... 10.1 - 9
10.1.9.6 HSP5 Watchdog time (Sy.09) ..... 10.1 - 10
10.1.9.7 Automatic storing (ud.05) ..... 10.1 - 10
10.1.9.8 Status- and control word ..... 10.1 - 10
10.1.9.9 Speed setting via bus ..... 10.1 - 12

10. Networks

10.1 Network components

10.1.1 Available hardware

The KEB COMBIVERT F5 can be easily integrated into different networks. For that purpose the inverter is fitted with an operator that is appropriate for the respective bus system. Following hardware components are available:

–	**RS232-Cable PC/operator** for operation with interface operator	**Part No.:**	**00.58.025-001D**
–	**HSP5-Adaptor PC/control board** for operation without operator; RS232 => TTL	**Part No.:**	**00.F5.0C0-0001**
–	**F5 Interface-operator** serial networks in RS232 or RS485 standard	**Part No.:**	**00.F5.060-2000**
–	**F5 Profibus-DP-operator**	**Part No.:**	**00.F5.060-3000**
–	**F5 InterBus-operator**	**Part No.:**	**00.F5.060-4000**
–	**InterBus-Remote bus interface connection** (in connection with Interface Operator)	**Part No.:**	**00.B0.0BK-K001**
–	**F5 CanOpen-operator**	**Part No.:**	**00.F5.060-5000**
-	**F5 Sercos-operator**	**Part No.:**	**00.F5.060-6000**

10.1.2 RS232-cable PC / operator 00.58.025-001D

The cable of 3m length is used for the direct RS232-connection between PC (9-pole SUB-D-connector) and operator.

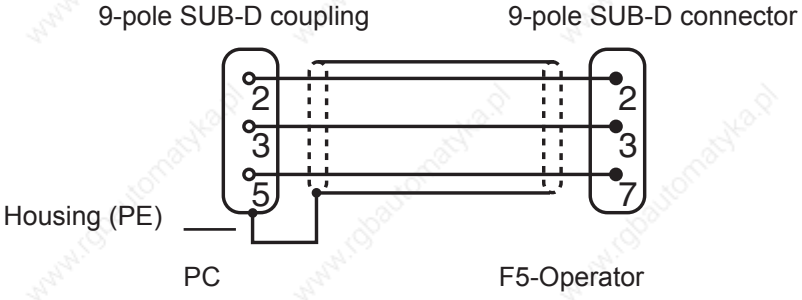

The RS232 cable is suitable exclusively for the communication between PC and operator. If the cable is plugged in directly onto the control board, it can lead to the desctruction of the interface of the PC.

10.1.3 HSP5-cable / control board 00.F5.0C0-0010

The HSP5-cable is used for the direct connection between PC and control board. The necessary conversion to TTL-level occurs in the cable.

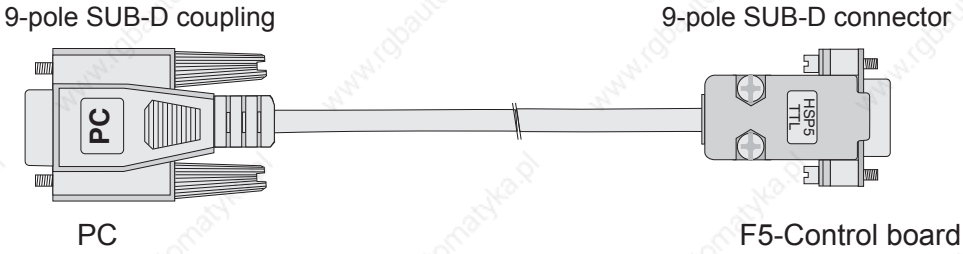

10.1.4 Interface operator F5 00.F5.060-2000

A potential-separated RS232/RS484 interface is integrated in the interface operator (00.F5.060-2000). The telegram structure is compatible to protocol DIN 66019 and ANSI X3.28 as well as to protocol expansion DIN 66019 II.

RS232/RS485

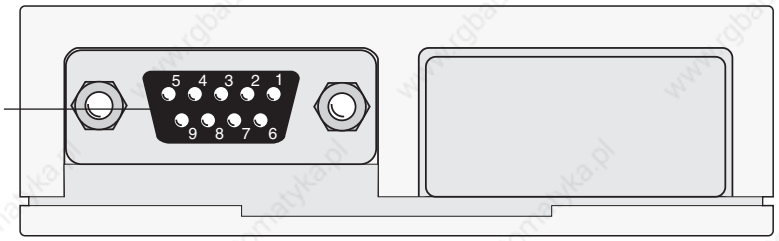

PIN	Signal	Meaning
1	–	reserved
2	TxD	Transmission signal/RS232
3	RxD	Receive signal/RS232
4	RxD-A (+)	Receive signal A/RS485
5	RxD-B (-)	Receive signal B/RS485
6	VP	Supply voltage -Plus +5V (Imax=10mA)
7	GND	Data reference potential; earth for VP
8	TxD-A (+)	Transmission signal A/RS485
9	TxD-B (-)	Transmission signal B/RS485

10.1.5 Profibus-DP operator F5 00.F5.060-3000

The PROFIBUS-DP-interface module realizes a passive user (Slave). This means that the PROFIBUS-DP interface module only transmits, if it receives an enquiry for that from the master.

The PROFIBUS-DP-protocol defines different operating conditions, that must be executed first, before the actual user data can be exchanged. The responsible DP master must first parameterize and then configure his slaves. If these two functions are successfully completed, the cyclic exchange of user data begins.

Fig. 11.1.5 Profibus-DP operator

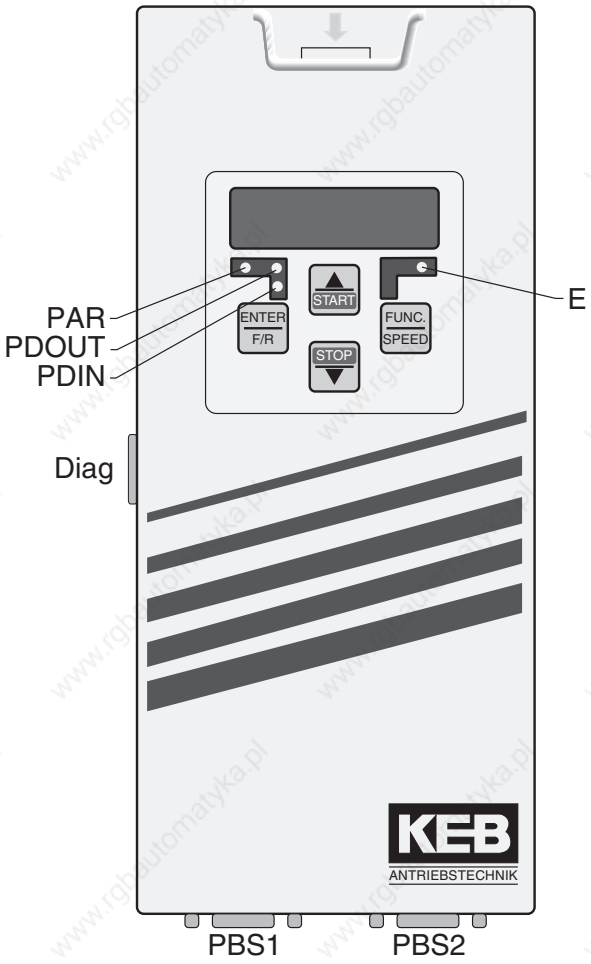

PAR (green):		Parameterizing channel active
PDOUT (green):		PDOUT data are written to the FI control
PDIN (green):		PDIN data are read by the FI control.
E (red):	On ==>	Inverter ready for operation
	Blinking ==>	Inverter failure
	off ==>	No supply voltage
Diag:		Diagnostic interface to the PC
PBS1:		PROFIBUS-DP interface (socket connector)
PBS2:		PROFIBUS-DP interface (pin-connector)

10.1.6 InterBus operator F5 00.F5.060-4000 / 4001

The InterBus operator F5 is a slip-on operator with interbus 2-wire remote bus connection for KEB COMBIVERT F5. The voltage supply occurs via the inverter, for an independent supply it can also be fed in externally over the control terminal strip of the inverter. Over the PCP channel 0, 1, 2 or 3 interbus register words can be configured for the process data channel. Parallel to the field bus operation the operation via the integrated display/ keyboard as well as a further serial interface for diagnosis/parameterization (COMBIVIS) is possible.

Fig. 11.1.6 InterBus operator

COM (green)
It lights in the case of communication via InterBus PCP or diagnostic interface

RD (red)
On: the remote bus interface (IB_out) was turned off by the host

Diag
Diagnostic interface to the PC
The diagnostic interface is connected to the PC via an adaptor and a HS5P cable. By way of the PC-software COMBIVIS one has now normal access to all inverter parameters. The internal operator parameters like Interbus process data length and occupation can be read and adjusted or parameterized through download. Alternatively a monitoring of the InterBus PCP as well as the process data channels can be carried out with the PC-software HSP5-monitor.

Separately available accessory:
HSP5 cable between PC and adapter
(Part No: 00.F5.0C0-0010)
Adaptor D-Sub9/western
(Part No: 00.F5.0C0-0020)

BA (green)
On: Interbus runs
Blinking: Interbus was stopped by the host
Off: Remote bus cable not available or defective/host not in operation or defective

E (red)
On: Ready for operation
Blinking: Inverter failure
Off: No supply voltage

RC (green)
On: Remote bus ready for operation
Off: Remote bus cable not available or defective/host not in operation or defective

IB_in
Remote bus input
(D-Sub 9-connector)

IB_out
Remote bus output
(D-Sub 9 socket)

10.1.7 CanOpen operator F5 00.F5.060-5010 / 5011

CAN is a Multi-Master-System**.** This means every node has access to the BUS and can send telegrams. In order to prevent problems when two nodes simultaneously access the BUS, the CAN-BUS has an arbitration phase which determines who may continue to send his telegram. When there is a conflict in accessing BUS the user with the lowest telegram number (identifier) has priority. This user then can completely send his telegram without repeating the first part. All other nodes go into receiving status and stop sending their telegram. Thus it is determined that lower telegram numbers have automatically priority. The available telegram numbers in the CAN version 2.0A are limited to 2032 identifiers (0...2031).

Fig. 11.1.7 CanOpen operator

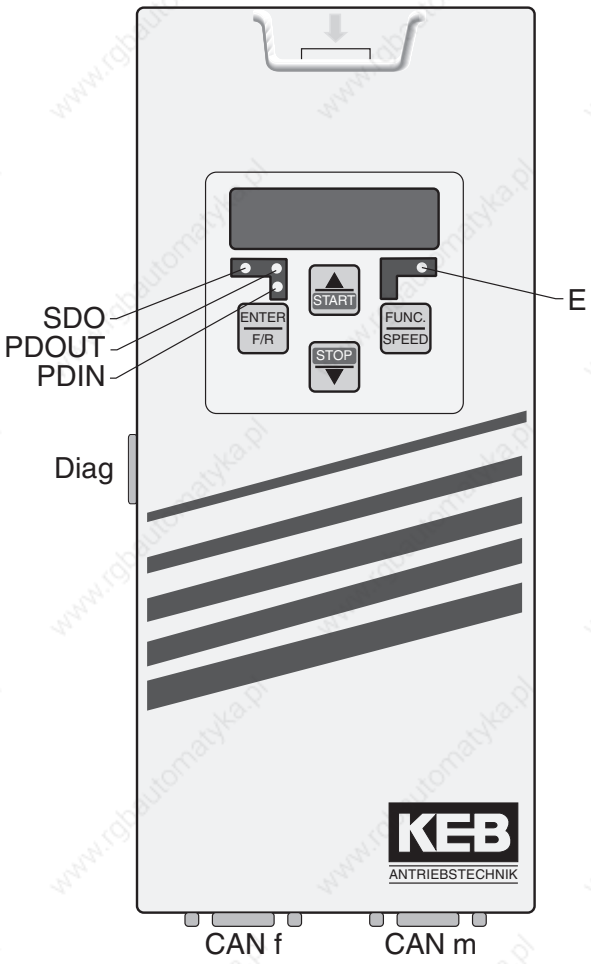

SDO (green):	SDO Communication active
PDOUT (green):	PDOUT data are written to the FI control.
PDIN (green):	PDIN data are read by the FI control.
E (red): on =>	Inverter ready for operation
flashing =>	Inverter fault
off =>	No supply voltage
Diag:	Diagnostic interface to the PC
CAN f:	CAN interface (socket-connector)
CAN m:	CAN interface (pin-connector)

10.1.8 Sercos operator 00.F5.060-6000

The herein described unit is a plugable operator with SERCOS-interface for the frequency inverter or servo KEB COMBIVERT F5. As far as possible the hard and software were developed taking the DIN/EN 61491 into consideration. The voltage supply occurs via the inverter, for an independent supply it can also be fed in externally over the control terminal strip of the inverter. The SERCOS interface is designed as optical fibre ring for plastic (POF) or fibre glas cable (HCS) with F-SMA plugs. The SERCOS-service channel as well as cyclic data transfer are available. Parallel to SERCOS operation the operation via integrated display/keyboard and also an additional serial interface for diagnosis / parameterization (KEB COMBIVIS) is possible (depending on the operation mode it may be disabled). SERCOS operation parameters like slave address, transmitting power etc. can be adjusted via the keyboard.

Fig. 11.1.8 Sercos operator

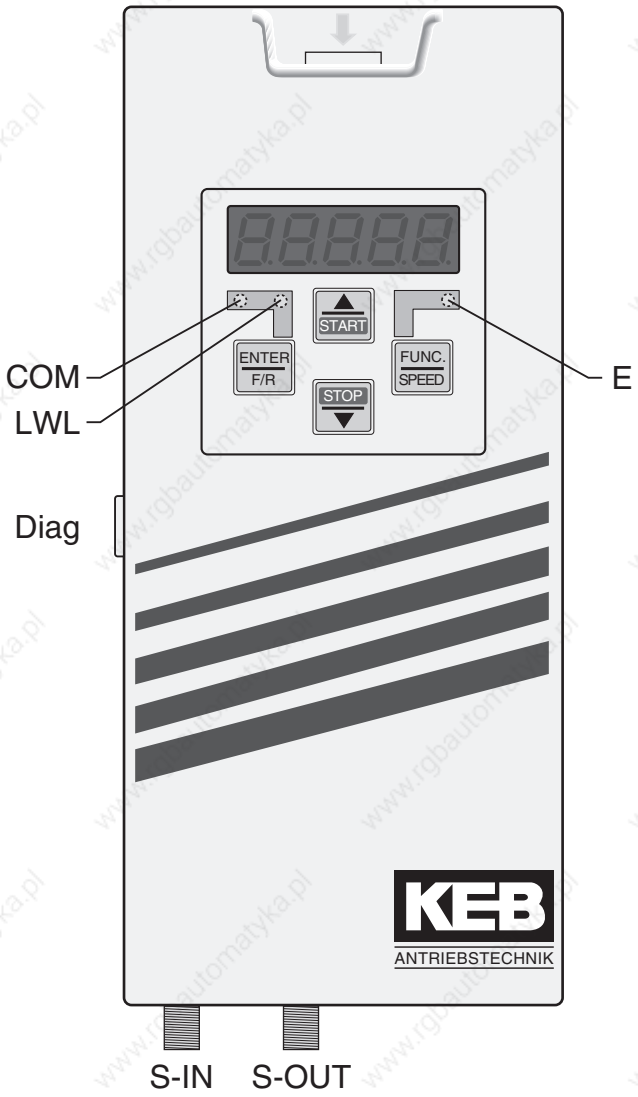

COM (green):	Lights up when access via the SERCOS service channel
LWL (red):	
Full brightness	no SERCOS input signal (LWL disconnected, previous device switched off)
Low brightness	receive distortion of the SERCOS input signal (transmission power of the previous device too high or too low, incorrect baud rate)
E (red): on =>	Servo/inverter ready for operation
flashing =>	Servo/inverter fault
off =>	no supply voltage
Diag	Diagnostic interface to the PC
S-IN	SERCOS input interface
S-OUT	SERCOS output interface

10.1.9 Bus parameter

10.1.9.1 Inverter address (SY.06)

In SY.06 can be adjusted, if the inverter shall be responded via "COMBIVIS" or another control. Values between 0 and 239 are possible, the default value is 1. If several inverters are operated on the bus simultaneously, it is absolutely necessary to assign different addresses to them, since otherwise it leads to communication failures, because several inverters may answer at the same time. The description of the DIN 66019II protocol (C0. F5.01I-K001) contains further information to this. SY.06 is not reset on loading the default parameters.

10.1.9.2 Baud rate ext. bus (SY.07)

Following values for the baud rate of the serial interface are possible:

Sy.07: Baud rate ext. bus	
Value	Baud rate
0	1200 Baud
1	2400 Baud
2	4800 Baud
3 (default)	9600 Baud
4	19200 Baud
5	38400 Baud
6	55500 Baud

If the value for the baud rate is changed via the serial interface, it can be changed again only via keyboard or after adapting the baud rate of the master, because no communication is possible with different baud rates of master and slave.
Should problems occur at the data transmission choose a transfer rate of maximal 38400 baud.

10.1.9.3 Baud rate int. bus (SY.11)

The transmission speed between operator and inverter is determined with the internal baud rate. The following values are possible (unit-dependent):

Value	Baud rate	Value	Baud rate	Value	Baud rate
3	9,6 kBaud	6	55,5 kBaud	9	115,2 kBaud
4	19,2 kBaud	7	57,6 kBaud	10	125 kBaud
5	38,4 kBaud	8	100 kBaud	11	250 kBaud

10.1.9.4 Watchdog time (Pn.06)

For continuous control of the communication at the operator interface it is possible to release an error message of the inverter, if no telegrams after expiration of an adjustable time (0.01… 10 s) are received. The function can be deactivated by setting the value "off".

10.1.9.5 Response to E.bus (Pn.05)

This parameter determines the response to a watchdog error. The message E.buS or A.buS is output dependent on the selected adjustment.

10.1.9.6 HSP5 Watchdog time (SY.09)

The HSP5 Watchdog function monitores the communication of the HSP5 interface (control card - operator; or control card - PC). The adjusted response in Pn.05 is released if no telegrams after expiration of an adjustable time (0,01...10 s) are received. The value „off“ deactivates the function.

10.1.9.7 Auto store (ud.05)

At factory setting the KEB COMBIVERT stores all parameter changes immediately non-volatile. But the most bus applications do not require this function if new values are preset cyclically. Automatic storing should be switched off with ud.05 = “off" in order to increase product life cycle of the internal memory. After each switching on ud.05 is set to „on“ and must be switched off via bus.

10.1.9.8 Status- and control word

The control word is used for the status control of the inverter via bus. The actual state of the inverter can be read out with the status word.

The control word low is bit-coded designed as follows.

SY.50: Control word low			
Bit	Function	Value	Description
0	Control release	1: ST	1= set control release This bit is only effective if di.01 „select signal source“ bit 0 is set. Then the AND operation of this bit with di.02 „digital input setting“ bit 0 is valid.
1	Automatic	2: RST	An error reset is executed when changing from not activated (0) to activated (2).
2	Start / stop	0: Stop	Direction of rotation release or the „start “(„run “) command can be given via the control word, if oP.01 „rotation source“ contains the values 6, 8, 9 or 10.
		4: Start	
3	Clockwise / counter clockwise rotation	0: Clockwise rotation	If oP.01 „rotation source“ contains the values 8 or 9, the direction of rotation is preset via this bit.
		8: Counter-clockwise rotation	
4...6	Parameter set	0: Set 0	Selection of the active parameter set, if in Fr.02 „parameter set source“ the value „5: control word (SY.50)“ is programmed
		16: Set 1	
		32: Set 2	
		48: Set 3	
		64: Set 4	
		80: Set 5	
		96: Set 6	
		112: Set 7	
7	reserved		
8	Fast stop on / off	256: Fast stop	Releases fast stop (OR operation with further fast stop sources)

further on next side

Sy.50: Control word low			
Bit	Function	Value	Description
9	Start approach to reference point	512: Start approach to reference point	Change of not activated (0) to activated (512) starts approach to reference point
10	Start Positioning	1024: Start Positioning	Change of not activated (0) to activated (1024) starts the positioning
11	Interruption	2048: Interruption	Change of not activated (0) to activated (2048) stops the positioning (drive is stopped with ramp according to positioning profile)
12, 13	Operating mode	0: off	Selection of the operating mode via the control word. Only valid if in PS.00 „posi/syn mode“ in bits 0..2 value „7: via control word“ is programmed
		4096: Synchronous running	
		8192: positioning	
		12288: Contouring control	
14, 15	reserved		

SY.41: Control word high			
Bit	Function	Value	Description
16	I1	1: I1	corresponding input is set via the control word instead via hardware input. These bits are only effective if the bit for the appropriate input is set in di.01 „select signal source“. Then the OR operation of this bit with the corresponding bits of parameter di.02 „digital input setting" is valid.
17	I2	2: I2	
18	I3	4: I3	
19	I4	8: I4	
20	IA	16: IA	
21	IB	32: IB	
22	IC	64: IC	
23	Id	128: Id	
24	O1	256: O1	appropriate output is set via the control word or via the switching conditions. Output signals O1, CO2, g 1 and R2 (visible in parameter ru.80) are OR operated with the appropriate bits of the control word. The connection occurs according di.42 „inverted outputs “(inverting level for the output signals) and before they are switched to the hardware outputs with do.51 „hardware output allocation“.
25	O2	512: O2	
26	R1	1024: R1	
27	R2	2048: R2	
28...31	reserved		

Control word long SY.43

The control word long (32 Bit) consists of SY.50 and SY.41.

Status word low SY.51

The actual state of the inverter can be read out with the status word.

SY.51: Control word low		
Bit	Value	Description
0	1: ST	1=set control release (AND operation with di.1 bit 0)
1	2: Error	Inverter is in error state
2	0: Stop	The modulation is switched off at „stop“ and switched on at „start“. Exception: if a positioning is stopped with bit 11 "stop" in the control word, "stop" is displayed in the status word, if the drive reaches speed 0 (even if modulation is still active). This exception can be reversed with bit 9 in parameter Pn.65 „special functions“.
	4: Start	
3	0: Clockwise rotation	Display of the actual direction of rotation
	8: Counter-clockwise rotation	
4...6	0: Set 0	Display of the actual parameter set
	16: Set 1	
	32: Set 2	
	48: Set 3	
	64: Set 4	
	80: Set 5	
	96: Set 6	
	112: Set 7	
7	128: Actual value = Setpoint value	ru.07 „actual value display“ with a hysteresis of +/- LE.16 „freq./ speed hysteresis“ has the same value as ru.01 „set value display“
8	256: Fast stop	Fast stop is active
9	512: HSP5 bus-synchronous	Inverter in bus-synchronous operation
10	1024: Approach to reference point completed	Approach to reference point was executed since the last power on (or the position was validate otherwise)
11	2048: Position reached	Display that the position profile is completed and the drive is within the range of +/- PS.30 „target window“ near ru.61 „target position“
12, 13	0: Speed control	Display of the operating mode selected via control word (only identical with the actual operating mode of the inverter, if in PS.00 „pos/syn mode“ in bits 0..2 value „7: via control word“ is programmed)
	4096: Synchronous running	
	8192: positioning	
	12288: Contouring control	
14	Posi or approach to reference point active	Positioning or approach to reference point is active
15	internal limit	The speed setpoint value or any controller (e.g. current, flux, speed or external PID controller) is in limitation (also in V/f characteristic open-loop operation)

Status word high SY.42

The status word high is bit-coded designed as follows.

Sy.42 Status word high		
Bit	Value	Explanation
0...7	1: I1	Display of the internal input terminal status (input terminals and software inputs after the input processing block). Corresponds to the display in ru.22 „internal input state“
	2: I2	
	4: I3	
	8: I4	
	16: IA	
	32: IB	
	64: IC	
	128: Id	
8...15	256: O1	Display of the state of the output terminals and the software outputs (digital outputs after the output proccessing block). Corresponds to the display in ru.25 „output terminal state“
	512: O2	
	1024: R1	
	2048: R2	
	4096: OA	
	8192: OB	
	16384: OC	
	32768: OD	

It is necessary that the watchdogs are active at control via bus (operator and HSP5).

10.1.9.9 Speed setting via bus

Status word long (SY.44)

The control word long (32 Bit) consists of SY.51 and SY.42.

Set speed value (SY.52)

Setting of the set speed value in the range of ±16000 rpm. The source of rotation direction is determined as the other absolute setpoint sources over oP.01. The setpoint source oP.0 must be adjusted to „5“ via Sy.52 for setpoint setting.

Actual speed value (SY.53)

The actual speed can be read out in rpm with this parameter. The direction of rotation is signalled by the sign.

1. Introduction
2. Summary
3. Hardware
4. Operation
5. Selection of Operating Mode
6. Initial Start-up
7. Functions
8. Error Assistance
9. Project Design
10. Networks
11. Parameter Overview
12. Annex

11.1 Parameter

11.1.1 Parameter groups ..... 11.1 - 3
11.1.2 Parameter list F5-A, -E and -H..... 11.1 - 5

11. Parameter Overview

11.1 Parameter

11.1.1 Parameter groups

The frequency inverters KEB COMBIVERT F5-A / -E / -H include 19 fixed and one free definable parameter group. In the fixed parameter groups the parameters are combined function-related.

Figure 11.1.1 Parameter overview

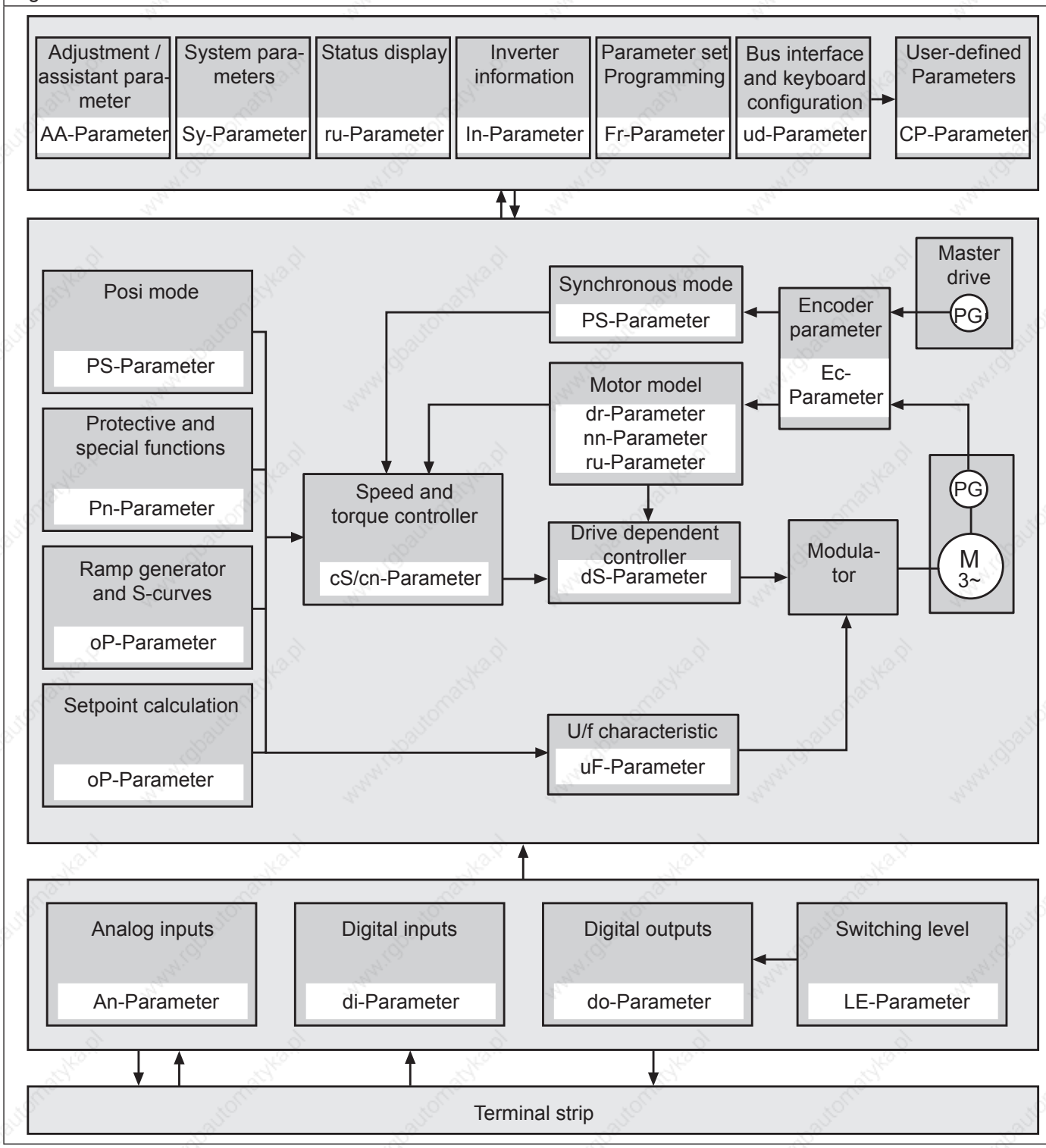

11.1.2 Parameter list F5-A, -E and -H

Legend

Parameter: Parameter group, number and name (ordered by parameter group and number)
Addr.: Parameter address in hex
R: Password level appl => application, ro => read only
P: p => set-programmable; np => not set-programmable
E: E => Enter-Parameter
Lower limit: Min. value (normalized); the non-normalized value results on division by the step range
Upper limit: Max. value (normalized); the non-normalized value results on division by the step range
Step: Step size, resolution
default: Default value (normalized); the non-normalized value results on division by the step range
LTK => the default value is dependent on the power circuit identification
Unit: unit
Reference: further information to this parameter on stated page (not chapter)

Parameter		Addr.	R	P	E	Lower limit	Upper limit	Default	Step	Unit	See on page
AA.00	Graph 1 parameter select	1200h	appl	np	---	0	7FFFH	0200h	1	hex	
AA.01	Graph 2 parameter select	1201h	appl	np	---	-1: off	7FFFH	-1: off	1	hex	
AA.02	Graph 3 parameter select	1202h	appl	np	---	-1: off	7FFFH	-1: off	1	hex	
AA.03	Graph 4 parameter select	1203h	appl	np	---	-1: off	7FFFH	-1: off	1	hex	
AA.04	Time base	1204h	appl	np	---	63	32000	125	1	µs	
AA.05	Trigger source	1205h	appl	np	E	0	4095	0	1	---	
AA.06	Trigger position	1206h	appl	np	---	0	100	0	1	%	
AA.07	Synchronization	1207h	appl	np	---	0	255	0	1	---	
AA.08	Trigger status	1208h	appl	np	---	0	255	0	1	hex	
AA.09	Select graph address	1209h	appl	np	---	0	var.	0	1	hex	
AA.10	Read parameter 1	120Ah	RO	np	---	-(2^31-1)	2^31-1	0	1	---	
AA.11	Read parameter 2	120Bh	RO	np	---	-(2^31-1)	2^31-1	0	1	---	
AA.12	Read parameter 3	120Ch	RO	np	---	-(2^31-1)	2^31-1	0	1	---	
AA.13	Read parameter 4	120Dh	RO	np	---	-(2^31-1)	2^31-1	0	1	---	
AA.16	Speed difference filter	1210h	appl	np	---	0: off	1: on	0: off	1	---	
AA.17	No load current	1211h	RO	np	---	0	65535	0	1	---	
AA.19	IDN	1213h	RO	np	---	0	65535	LTK	1	---	
AA.20	ID	1214h	RO	np	---	-32767	32767	0	1	---	
AA.25	Id correction display	1219h	RO	np	---	-32767	32767	0	1	---	
AA.59	Mode isd_ref	123Bh	appl	np	---	0	2	0	1	---	
AA.60	PT1-Tau isd_ref	123Ch	appl	np	---	0	65535	1024	1	---	
AA.61	Apparent current / actual torque PT1 time	123Dh	appl	np	---	0	10	3	1	---	
AA.62	Selection internal data address	123Eh	appl	np	---	0	32	0	1	---	
AA.63	Internal data address	123Fh	RO	np	---	0	0FFFFH	0	1	hex	
AA.64	Actual value PT1 time	1240h	appl	np	---	0	10	0	1	---	
An.00	AN1 interface selection	0A00h	appl	np	E	0	2	0	1	---	7.2-3, 7.2-4
An.01	AN1 noise filter	0A01h	appl	np	E	0	4	0	1	---	7.2-3, 7.2-5
An.02	AN1 save mode	0A02h	appl	np	E	0	3	0	1	---	7.2-3, 7.2-5, 7.2-6
An.03	AN1 save triggering input selection	0A03h	appl	np	E	0	4095	0	1	---	7.2-3, 7.2-6
An.04	AN1 zero clamp	0A04h	appl	np	---	-10,0	10,0	0,2	0,1	%	7.2-3, 7.2-7
An.05	AN1 gain	0A05h	appl	P	---	-20,00	20,00	1,00	0,01	---	7.2-3, 7.2-8, 7.4-5
An.06	AN1 offset X	0A06h	appl	P	---	-100,0	100,0	0,0	0,1	%	7.2-3, 7.2-8, 7.4-5
An.07	AN1 offset Y	0A07h	appl	P	---	-100,0	100,0	0,0	0,1	%	7.2-3, 7.2-8
An.08	AN1 lower limit	0A08h	appl	P	---	-400,0	400,0	-400,0	0,1	%	7.2-3, 7.2-9
An.09	AN1 upper limit	0A09h	appl	P	---	-400,0	400,0	400,0	0,1	%	7.2-3, 7.2-9
An.10	AN2 interface selection	0A0Ah	appl	np	E	0	2	0	1	---	3.1-3, 7.2-3, 7.2-4
An.11	AN2 noise filter	0A0Bh	appl	np	E	0	4	0	1	---	7.2-3, 7.2-5, 7.9-3
An.12	AN2 save mode	0A0Ch	appl	np	E	0	3	0	1	---	7.2-3, 7.2-5, 7.9-3
An.13	AN2 save triggering input selection	0A0Dh	appl	np	E	0	4095	0	1	---	7.2-3, 7.2-6, 7.3-9, 7.3-10
An.14	AN2 zero clamp	0A0Eh	appl	np	---	-10,0	10,0	0,2	0,1	%	7.2-3, 7.2-7
An.15	AN2 gain	0A0Fh	appl	P	---	-20,00	20,00	1,00	0,01	---	7.2-3, 7.2-8
An.16	AN2 offset X	0A10h	appl	P	---	-100,0	100,0	0,0	0,1	%	7.2-3, 7.2-8
An.17	AN2 offset Y	0A11h	appl	P	---	-100,0	100,0	0,0	0,1	%	7.2-3, 7.2-8, 7.9-3
An.18	AN2 lower limit	0A12h	appl	P	---	-400,0	400,0	0,0	0,1	%	7.2-3, 7.2-9
An.19	AN2 upper limit	0A13h	appl	P	---	-400,0	400,0	400,0	0,1	%	7.2-3, 7.2-9
An.20	AN3 interface selection	0A14h	appl	np	E	0	1	0	1	---	7.2-3, 7.2-5
An.21	AN3 noise filter	0A15h	appl	np	E	0	4	0	1	---	7.2-3, 7.2-5
An.22	AN3 save mode	0A16h	appl	np	E	0	3	0	1	---	7.2-3, 7.2-5

further on next side

Parameter		Addr.	R	P	E	Lower limit	Upper limit	Default	Step	Unit	See on page
An.23	AN3 save triggering input selection	0A17h	appl	np	E	0	4095	0	1	---	7.2-3, 7.2-6, 7.3-9, 7.3-10
An.24	AN3 zero clamp	0A18h	appl	np	---	-10,0	10,0	0,0	0,1	%	7.2-3, 7.2-7
An.25	AN3 gain	0A19h	appl	P	---	-20,00	20,00	1,00	0,01	---	7.2-3, 7.2-8
An.26	AN3 offset X	0A1Ah	appl	P	---	-100,0	100,0	0,0	0,1	%	7.2-3, 7.2-8
An.27	AN3 offset Y	0A1Bh	appl	P	---	-100,0	100,0	0,0	0,1	%	7.2-3, 7.2-8
An.28	AN3 lower limit	0A1Ch	appl	P	---	-400,0	400,0	-400,0	0,1	%	7.2-3, 7.2-9
An.29	AN3 upper limit	0A1Dh	appl	P	---	-400,0	400,0	400,0	0,1	%	7.2-3, 7.2-9, 7.2-10
An.30	Selection REF-input/AUX-function	0A1Eh	appl	P	E	0	16383	2112	1	---	7.2-3, 7.2-10, 7.4-4, 7.9-3, 7.12-45, 7.12-46
An.31	ANOUT1 function	0A1Fh	appl	P	E	0	29	2	1	---	3.1-3, 7.2-11, 7.2-13, 7.12-71
An.32	ANOUT1 value	0A20h	appl	P	---	-100,0	100,0	0,0	0,1	%	7.2-11, 7.2-13, 7.2-15
An.33	ANOUT1 gain	0A21h	appl	P	---	-20,00	20,00	1,00	0,01	---	7.2-11, 7.2-14, 7.2-15
An.34	ANOUT1 offset X	0A22h	appl	P	---	-100,0	100,0	0,0	0,1	%	7.2-14, 7.2-15
An.35	ANOUT1 offset Y	0A23h	appl	P	---	-100,0	100,0	0,0	0,1	%	7.2-14
An.36	ANOUT2 function	0A24h	appl	P	E	0	29	6	1	---	7.2-13, 7.12-71
An.37	ANOUT2 value	0A25h	appl	P	---	-100,0	100,0	0,0	0,1	%	7.2-15
An.38	ANOUT2 gain	0A26h	appl	P	---	-20,00	20,00	1,00	0,01	---	7.2-11, 7.2-14
An.39	ANOUT2 offset X	0A27h	appl	P	---	-100,0	100,0	0,0	0,1	%	7.2-14
An.40	ANOUT2 offset Y	0A28h	appl	P	---	-100,0	100,0	0,0	0,1	%	7.2-14
An.41	ANOUT3 function	0A29h	appl	np	E	0	29	12	1	---	7.2-11, 7.2-13
An.42	ANOUT3 value	0A2Ah	appl	np	---	-100,0	100,0	0,0	0,1	%	7.2-15
An.43	ANOUT3 gain	0A2Bh	appl	np	---	-20,00	20,00	1,00	0,01	---	7.2-14
An.44	ANOUT3 offset X	0A2Ch	appl	np	---	-100,0	100,0	0,0	0,1	%	7.2-14
An.45	ANOUT3 offset Y	0A2Dh	appl	np	---	-100,0	100,0	0,0	0,1	%	7.2-14
An.46	ANOUT3 period	0A2Eh	appl	np	E	1	240	1	1	s	7.2-11, 7.2-12, 7.2-15
An.47	ANOUT4 function	0A2Fh	appl	np	E	0	29	12	1	---	7.2-13
An.48	ANOUT4 value	0A30h	appl	np	---	-100,0	100,0	0,0	0,1	%	7.2-15
An.49	ANOUT4 gain	0A31h	appl	np	---	-20,00	20,00	1,00	0,01	---	7.2-14
An.50	ANOUT4 offset X	0A32h	appl	np	---	-100,0	100,0	0,0	0,1	%	7.2-14
An.51	ANOUT4 offset Y	0A33h	appl	np	---	-100,0	100,0	0,0	0,1	%	7.2-14
An.52	ANOUT4 period	0A34h	appl	np	E	1	240	1	1	s	7.2-12
An.53	Analog parameter setting source	0A35h	appl	np	E	0	5	0	1	---	7.11-16, 7.11-17, 7.12-24, 7.12-36, 7.12-45, 7.12-46, 7.12-71, 7.15-22
An.54	Analogparameter setting destination	0A36h	appl	np	E	-1: off	7FFFH	-1: off	1	hex	7.11-16, 7.11-17, 7.12-36, 7.12-45, 7.12-46, 7.12-71, 7.15-7, 7.15-22
An.55	Analog parameter setting offset	0A37h	appl	np	---	-2^31	2^31-1	0	1	---	7.11-16, 7.11-17, 7.12-45, 7.12-71, 7.15-22
An.56	Analog parameter setting max. value	0A38h	appl	np	---	-2^31	2^31-1	0	1	---	7.11-16, 7.11-17, 7.12-45, 7.12-46, 7.12-71, 7.15-22
An.57	Analog parameter setting set pointer	0A39h	appl	np	E	-1: act set	7	0	1	---	7.15-3, 7.15-23
cn. 00	PID reference source	0700h	appl	P	---	0	4	0	1	---	7.15-26
cn. 01	PID absolute reference	0701h	appl	P	---	-400,0	400,0	0,0	0,1	%	7.15-28
cn. 02	PID actual value source	0702h	appl	P	---	0	7	0	1	---	7.15-29
cn. 03	PID absolute actual value	0703h	appl	np	---	-400,0	400,0	0,0	0,1	%	7.14-3, 7.15-25
cn. 04	PID kp	0704h	appl	P	---	0,00	250,00	0,00	0,01	---	7.15-25
cn. 05	PID ki	0705h	appl	P	---	0,000	30,000	0,000	0,001	---	7.15-25
cn. 06	PID kd	0706h	appl	P	---	0,00	250,00	0,00	0,01	---	7.15-25
cn. 07	PID positive limit	0707h	appl	P	---	-400,0	400,0	400,0	0,1	%	7.15-25
cn. 08	PID negative limit	0708h	appl	P	---	-400,0	400,0	-400,0	0,1	%	7.15-25
cn. 09	PID fading time	0709h	appl	P	---	-0,01: freq	300,00	0,00	0,01	s	7.15-26
cn.10	PID reset condition	070Ah	appl	P	---	0	2	0	1	---	7.15-26
cn.11	PID reset input selection	070Bh	appl	np	E	0	4095	0	1	---	7.3-9, 7.3-10, 7.15-26
cn.12	I reset input selection	070Ch	appl	np	E	0	4095	0	1	---	7.3-9, 7.3-10, 7.15-26
cn.13	Fade in reset input selection	070Dh	appl	np	E	0	4095	0	1	---	7.3-9, 7.3-10, 7.15-26
cs.00	Speed control configuration	0F00h	appl	P	E	4	6	4	1	---	7.5-9, 7.5-10, 7.5-11, 7.5-12, 7.5-24, 7.6-4, 7.6-8, 7.9-4, 7.9-5
cs.00	Speed control configuration	0F00h	appl	P	E	0	127	0	1	---	7.5-9, 7.5-10, 7.5-11, 7.5-12, 7.5-24, 7.6-4, 7.6-8, 7.9-4, 7.9-5

further on next side

Parameter		Addr.	R	P	E	Lower limit	Upper limit	Default	Step	Unit	See on page
cs.01	Actual source	0F01h	appl	P	E	0	6	0	1	---	7.5-9, 7.5-10, 7.5-14, 7.5-24, 7.6-4, 7.6-8, 7.12-30, 7.12-31, 7.12-33, 7.12-34
cs.01	Actual source	0F01h	appl	P	E	0	5	0	1	---	7.5-9, 7.5-10, 7.5-14, 7.5-24, 7.6-4, 7.6-8, 7.12-30, 7.12-31, 7.12-33, 7.12-34
cs.01	Actual source	0F01h	appl	P	E	0	6	2	1	---	7.5-9, 7.5-10, 7.5-14, 7.5-24, 7.6-4, 7.6-8, 7.12-30, 7.12-31, 7.12-33, 7.12-34
cs.03	Slip compensation regenerative gain (vvc)	0F03h	appl	P	---	0,50	2,50	1,00	0,01	---	7.5-10, 7.5-11
cs.04	Speed control limit (vvc)	0F04h	appl	P	---	n*0	n * 4000	n*750	n * 0,125	rpm	7.5-9, 7.5-10
cs.06	KP speed	0F06h	appl	P	---	0	32767	300	1	---	7.5-9, 7.5-10, 7.5-13, 7.7-3, 7.7-4
cs.07	KP speed gain	0F07h	appl	P	---	0	32767	0	1	---	7.7-4
cs.08	KP speed limit	0F08h	appl	P	---	0	32767	0	1	---	7.7-4
cs.09	KI speed	0F09h	appl	P	---	0	32767	100	1	---	7.5-9, 7.5-10, 7.5-13, 7.7-3, 7.7-4
cS. 10	KI offset	0F0Ah	appl	P	---	0	32767	0	1	---	7.7-4
cS.11	Maximum speed for max. KI	0F0Bh	appl	P	---	-1; -0,125	16000; 2000	10; 1,25	1; 0,125	rpm	7.7-4
cS.12	Min. speed for cs.09	0F0Ch	appl	P	---	0	16000; 2000	500; 62,5	1; 0,125	rpm	7.7-4
cS.15	Torque reference source	0F0Fh	appl	P	E	0	6	2	1	---	7.8-13, 7.9-3
cS.16	Torque acceleration time	0F10h	appl	P	---	0: off	60000	0: off	1	ms	7.9-3, 7.9-5
cS.18	Torque reference setting %	0F12h	appl	P	---	-100,0	100,0	100,0	0,1	%	7.8-13, 7.9-3
cS.19	Absolute torque reference	0F13h	appl	P	---	-32000,00	32000,00	LTK	0,01	Nm	7.5-13, 7.6-5, 7.8-13, 7.8-14, 7.8-15, 7.9-3, 7.11-23, 7.11-27
cS.20	Torque limit forward motor	0F14h	appl	P	---	-0,01: off	32000,00	-0,01: off	0,01	Nm	7.5-13, 7.6-5, 7.8-13
cs.21	Torque limit reverse motor	0F15h	appl	P	---	-0,01: off	32000,00	-0,01: off	0,01	Nm	7.8-13
cS.22	Torque limit forward generator	0F16h	appl	P	---	-0,01: off	32000,00	-0,01: off	0,01	Nm	7.8-13
cs.23	Torque limit reverse generator	0F17h	appl	P	---	-0,01: off	32000,00	-0,01: off	0,01	Nm	7.5-13, 7.8-13, 7.9-3
cS.24	Standstill position control	0F18h	appl	P	---	0: off	32767	0: off	1	---	
cs.25	Inertia (kg*cm^2)	0F19h	appl	P	---	0,00	10737418,23	0,00	0,01	---	7.5-13, 7.7-3, 7.7-5
cs.26	Optimization	0F1Ah	appl	P	E	1,9: off	15,0	1,9: off	0,1	---	7.5-13, 7.7-3
cs.27	Pretorque speed PT1 time	0F1Bh	appl	P	---	0	9	3	1	---	
cs.28	Pretorque speed factor %	0F1Ch	appl	P	---	0,0	200,0	0,0	0,1	%	7.7-6, 7.7-7
cs.29	Actual current reference PT1 time	0F1Dh	appl	P	---	0	9	0	1	---	7.7-6
di.00	PNP / NPN selection	0B00h	appl	np	E	0: PNP	SHR	0: PNP	1	---	3.1-4, 7.3-4
di.01	Select signal source	0B01h	appl	np	E	0	4095	0	1	---	7.3-3, 7.3-4, 7.3-5, 7.3-11, 7.3-12
di.02	Digital input setting	0B02h	appl	np	E	0	4095	0	1	---	7.3-4, 7.3-5, 7.3-11, 7.3-12
di.03	Digital noise filter	0B03h	appl	np	E	0	127	0	1	ms	7.3-6
di.04	Input logic	0B04h	appl	np	E	0	4095	0	1	---	7.3-6
di.05	Input trigger	0B05h	appl	np	E	0	4095	0	1	---	7.3-6
di.06	Select strobe source	0B06h	appl	np	E	0	4095	0	1	---	7.3-6, 7.3-7
di.07	Strobe mode	0B07h	appl	np	E	0	2	0	1	---	7.3-6, 7.3-7, 7.3-8
di.08	Input strobe dependence	0B08h	appl	np	E	0	4095	0	1	---	7.3-6, 7.3-7
di.09	Reset input selection	0B09h	appl	np	E	0	4095	3	1	---	7.3-8, 7.3-9, 7.3-10
di.10	Reset input slope selection	0B0Ah	appl	np	E	0	4095	3	1	---	7.3-8
di.11	I1 functions	0B0Bh	appl	np	E	-2^31	2^31-1	1	1	hex	7.3-3, 7.3-8, 7.3-10, 7.3-11, 7.3-12, 7.12-4, 7.12-5, 7.12-64, 7.12-74
di.12	I2 functions	0B0Ch	appl	np	E	-2^31	2^31-1	2	1	hex	
di.13	I3 functions	0B0Dh	appl	np	E	-2^31	2^31-1	8192	1	hex	
di.14	I4 functions	0B0Eh	appl	np	E	-2^31	2^31-1	0	1	hex	
di.15	IA functions	0B0Fh	appl	np	E	-2^31	2^31-1	0	1	hex	
di.16	IB functions	0B10h	appl	np	E	-2^31	2^31-1	0	1	hex	

further on next side

Parameter		Addr.	R	P	E	Lower limit	Upper limit	Default	Step	Unit	See on page
di.17	IC functions	0B11h	appl	np	E	-2^31	2^31-1	0	1	hex	
di.18	ID functions	0B12h	appl	np	E	-2^31	2^31-1	0	1	hex	
di.19	FOR functions	0B13h	appl	np	E	-2^31	2^31-1	32	1	hex	
di.20	REV functions	0B14h	appl	np	E	-2^31	2^31-1	64	1	hex	
di.21	RST functions	0B15h	appl	np	E	-2^31	2^31-1	128	1	hex	
di.22	ST functions	0B16h	appl	np	E	-2^31	2^31-1	128	1	hex	7.3-8, 7.3-10, 7.3-11, 7.3-12, 7.12-64, 7.12-74
di.23	Fast digital noise filter	0B17h	appl	np	E	0,00	31,75	0,00	0,25	ms	7.3-3, 7.3-6
di.24	I1 prog. function	0B18h	appl	np	E	0	18	0	1	---	7.3-8, 7.3-11, 7.12-35, 7.12-39, 7.12-72, 7.12-73, 7.12-74
di.25	I2 prog. function	0B19h	appl	np	E	0	18	0	1	---	
di.26	I3 prog. function	0B1Ah	appl	np	E	0	18	0	1	---	
di.27	I4 prog. function	0B1Bh	appl	np	E	0	18	0	1	---	
di.28	IA prog. function	0B1Ch	appl	np	E	0	18	0	1	---	
di.29	IB prog. function	0B1Dh	appl	np	E	0	18	0	1	---	
di.30	IC prog. function	0B1Eh	appl	np	E	0	18	0	1	---	
di.31	ID prog. function	0B1Fh	appl	np	E	0	18	0	1	---	
di.32	FOR prog. function	0B20h	appl	np	E	0	18	0	1	---	
di.33	REV prog. function	0B21h	appl	np	E	0	18	0	1	---	
di.34	RST prog. function	0B22h	appl	np	E	0	18	0	1	---	
di.35	ST prog. function	0B23h	appl	np	E	0	18	0	1	---	7.3-8, 7.3-11, 7.12-35, 7.12-39, 7.12-72, 7.12-73, 7.12-74
di.36	Software ST input selection	0B24h	appl	np	E	0	4095	0	1	---	7.3-9, 7.3-11, 7.3-12, 7.13-31, 7.13-32
di.37	ST lock input selection	0B25h	appl	np	E	0	4095	0	1	---	7.3-9, 7.3-11, 7.3-12
di.38	Turn off ST delay time	0B26h	appl	np	---	0,0	10,0	0,0	0,1	s	7.3-12
di.39	Disable digital ST input selection	0B27h	appl	np	E	0	4095	0	1	---	7.3-9, 7.3-11, 7.3-12, 7.13-33
do.00	Condition 0	0C00h	appl	P	E	0	92	20	1	---	7.3-12, 7.3-14, 7.3-15, 7.3-19, 7.3-20, 7.3-24, 7.12-11, 7.12-48, 7.12-49, 7.12-75
do.01	Condition 1	0C01h	appl	P	E	0	92	3	1	---	7.3-20, 7.3-24, 7.12-49
do.02	Condition 2	0C02h	appl	P	E	0	92	4	1	---	7.3-24, 7.12-49
do.03	Condition 3	0C03h	appl	P	E	0	92	2	1	---	7.12-49
do.04	Condition 4	0C04h	appl	P	E	0	92	0	1	---	7.12-49
do.05	Condition 5	0C05h	appl	P	E	0	92	0	1	---	
do.06	Condition 6	0C06h	appl	P	E	0	92	0	1	---	
do.07	Condition 7	0C07h	appl	P	E	0	92	0	1	---	7.3-12, 7.3-14, 7.3-15, 7.3-19, 7.3-20, 7.12-75
do.08	Inverter condition for flag 0	0C08h	appl	P	E	0	255	0	1	---	7.3-14, 7.3-20
do.09	Inverter condition for flag 1	0C09h	appl	P	E	0	255	0	1	---	7.3-20
do.10	Inverter condition for flag 2	0C0Ah	appl	P	E	0	255	0	1	---	7.3-24
do.11	Inverter condition for flag 3	0C0Bh	appl	P	E	0	255	0	1	---	
do.12	Inverter condition for flag 4	0C0Ch	appl	P	E	0	255	0	1	---	
do.13	Inverter condition for flag 5	0C0Dh	appl	P	E	0	255	0	1	---	
do.14	Inverter condition for flag 6	0C0Eh	appl	P	E	0	255	0	1	---	
do.15	Inverter condition for flag 7	0C0Fh	appl	P	E	0	255	0	1	---	7.3-14, 7.3-20
do.16	Condition selection for flag 0	0C10h	appl	P	E	0	255	1	1	---	7.3-14, 7.3-20, 7.3-24, 7.12-48, 7.12-49
do.17	Condition selection for flag 1	0C11h	appl	P	E	0	255	2	1	---	7.3-24, 7.12-49
do.18	Condition selection for flag 2	0C12h	appl	P	E	0	255	4	1	---	7.3-24, 7.12-49
do.19	Condition selection for flag 3	0C13h	appl	P	E	0	255	8	1	---	7.12-49
do.20	Condition selection for flag 4	0C14h	appl	P	E	0	255	16	1	---	
do.21	Condition selection for flag 5	0C15h	appl	P	E	0	255	32	1	---	
do.22	Condition selection for flag 6	0C16h	appl	P	E	0	255	64	1	---	
do.23	Condition selection for flag 7	0C17h	appl	P	E	0	255	128	1	---	7.3-14, 7.3-20
do.24	AND/OR connection for flags	0C18h	appl	P	E	0	255	0	1	---	7.3-14, 7.3-20, 7.3-21, 7.3-24, 7.12-49
do.25	Inversed flags for O1	0C19h	appl	P	E	0	255	0	1	---	7.3-14, 7.3-21, 7.3-24
do.26	Inversed flags for O2	0C1Ah	appl	P	E	0	255	0	1	---	7.3-24
do.27	Inversed flags for R1	0C1Bh	appl	P	E	0	255	0	1	---	7.3-24
do.28	Inversed flags for R2	0C1Ch	appl	P	E	0	255	0	1	---	7.3-3, 7.3-4
do.29	Inversed flags for OA	0C1Dh	appl	P	E	0	255	0	1	---	
do.30	Inversed flags for OB	0C1Eh	appl	P	E	0	255	0	1	---	
do.31	Inversed flags for OC	0C1Fh	appl	P	E	0	255	0	1	---	7.12-50
do.32	Inversed flags for OD	0C20h	appl	P	E	0	255	0	1	---	7.3-21

further on next side

Parameter		Addr.	R	P	E	Lower limit	Upper limit	Default	Step	Unit	See on page
do.33	Flag selection for O1	0C21h	appl	P	E	0	255	1	1	---	7.3-14, 7.3-21, 7.3-22, 7.3-24, 7.12-48
do.34	Flag selection for O2	0C22h	appl	P	E	0	255	2	1	---	7.3-24
do.35	Flag selection for R1	0C23h	appl	P	E	0	255	4	1	---	7.3-24
do.36	Flag selection for R2	0C24h	appl	P	E	0	255	8	1	---	7.3-3, 7.3-4
do.37	Flag selection for OA	0C25h	appl	P	E	0	255	16	1	---	7.12-49
do.38	Flag selection for OB	0C26h	appl	P	E	0	255	32	1	---	
do.39	Flag selection for OC	0C27h	appl	P	E	0	255	64	1	---	7.12-50
do.40	Flag selection for OD	0C28h	appl	P	E	0	255	128	1	---	7.3-22
do.41	AND connection for outputs	0C29h	appl	P	E	0	255	0	1	---	7.3-4, 7.3-14, 7.3-22, 7.3-24, 7.12-49
do.42	Inverted outputs	0C2Ah	appl	P	E	0	255	0	1	---	7.3-14, 7.3-22
do.43	Condition 0 filter time	0C2Bh	appl	P	---	0	1000	0	1	ms	7.3-14
do.44	Condition 1 filter time	0C2Ch	appl	P	---	0	1000	0	1	ms	7.3-14
do.51	Hardware output allocation	0C33h	appl	P	E	0	255	228	1	---	7.3-14, 7.3-23, 7.3-24
dr.00	DASM rated current	0600h	appl	P	---	0,0	1100,0	LTK	0,1	A	7.5-8, 7.5-12, 7.5-17, 7.5-23, 7.11-23, 7.15-5
dr.01	DASM rated speed	0601h	appl	P	---	0	64000; 8000	LTK	1; 0,125	rpm	7.5-8, 7.5-12, 7.11-23
dr.02	DASM rated voltage	0602h	appl	P	---	120	830	LTK	1	V	7.5-8, 7.5-9, 7.5-12, 7.11-23
dr.03	DASM rated power	0603h	appl	P	---	0,10	1000,00	LTK	0,01	kW	7.2-13, 7.5-8, 7.5-12, 7.7-3, 7.11-23
dr.04	DASM rated cos (phi)	0604h	appl	P	---	0,50	1,00	LTK	0,01	---	7.5-8, 7.5-12, 7.5-17, 7.11-23
dr.05	DASM rated frequency	0605h	appl	P	---	0,0	1600,0	LTK	0,1	Hz	7.5-8, 7.5-9, 7.5-12, 7.11-23
dr.06	DASM stator resistance	0606h	appl	P	E	0,000	250,000	LTK	0,001	Ohm	7.5-8, 7.5-9, 7.5-15, 7.5-17, 7.11-23
dr.07	DASM sigma-inductance	0607h	appl	P	---	0,01	655,35	LTK	0,01	mH	7.5-17, 7.5-20, 7.11-23
dr.08	DASM rotor resistance	0608h	appl	P	---	0,000	250,000	LTK	0,001	Ohm	7.5-17, 7.5-20
dr.09	Breakdown factor	0609h	appl	P	---	0,5	4,0	2,5	0,1	---	7.5-8, 7.5-9, 7.5-10
dr.10	DASM head inductance	060Ah	appl	P	---	0,1	3276,7	LTK	0,1	mH	7.5-15, 7.5-17
dr.11	Motor protection mode	060Bh	appl	P	---	0	1	1	1	---	7.13-27
dr.12	Motor protection rated current	060Ch	appl	P	---	0,0	1100,0	LTK	0,1	A	7.13-27
dr.13	DASM magnetizing current	060Dh	appl	P	---	0,0	1100,0	0,0	0,1	A	
dr.14	DASM rated torque	060Eh	RO	P	---	0,01	32000,00	0,01 Motdat	0,01	Nm	7.2-13, 7.8-4
dr.15	Max. torque FI	060Fh	RO	P	---	0,01	32000,00	0,01 Motdat	0,01	Nm	7.8-4, 7.8-5, 7.8-6, 7.8-7, 7.8-15, 7.9-3, 7.13-29
dr.15	Max. torque FI	060Fh	RO	np	---	0,01	32000,00	0,01 Motdat	0,01	Nm	7.8-4, 7.8-5, 7.8-6, 7.8-7, 7.8-15, 7.9-3, 7.13-29
dr.16	DASM max. torque corner speed	0610h	appl	P	---	0,01	32000,00	0,01 Adpt	0,01	Nm	7.5-13, 7.8-5, 7.8-6, 7.13-13, 7.13-20
dr.17	DASM speed for max. torque	0611h	appl	P	---	1; 0,125	64000; 8000	900; 112,5 Adpt	1; 0,125	rpm	7.5-13, 7.5-18, 7.5-19, 7.5-21, 7.5-23
dr.18	DASM field weakening speed	0612h	appl	P	---	0	64000; 8000	0 Adpt	1; 0,125	rpm	7.5-13, 7.5-16, 7.5-24, 7.8-5, 7.8-6, 7.8-15
dr.19	Flux adaption factor	0613h	appl	P	---	25	250	100 Adpt	1	%	7.5-13, 7.5-16, 7.5-17, 7.5-20, 7.5-24
dr.20	Field weakening curve	0614h	appl	P	---	0,01	2,00	1,20 Adpt	0,01	---	7.5-13, 7.5-16
dr.21	No load voltage	0615h	appl	P	---	0,0	100,0	75,0	0,1	%	
dr.23	DSM rated current	0617h	appl	np	---	0,0	1100,0	LTK	0,1	A	7.6-3, 7.6-6, 7.6-10, 7.11-23, 7.13-29
dr.24	DSM rated speed	0618h	appl	np	---	0	64000; 8000	LTK	1; 0,125	rpm	7.6-3, 7.6-17, 7.11-23, 7.11-24, 7.13-29
dr.24	DSM rated speed	0618h	appl	np	---	0	32000; 4000	LTK	1; 0,125	rpm	7.6-3, 7.6-17, 7.11-23, 7.11-24, 7.13-29
dr.25	DSM rated frequency	0619h	appl	np	---	0,0	1600,0	LTK	0,1	Hz	7.6-3, 7.11-23, 7.11-24
dr.26	DSM EMC [Vpk*1000rpm]	061Ah	appl	np	---	0	32000	LTK	1	---	7.6-3, 7.6-4, 7.6-11, 7.8-7, 7.11-23
dr.27	DSM rated torque	061Bh	appl	np	---	0,1; 1	6553,5; 65535	LTK	0,1; 1	Nm	7.2-13, 7.6-3, 7.8-7, 7.8-9, 7.8-10, 7.11-23
dr.28	DSM current for zero speed	061Ch	appl	np	---	0,0	1090,0	LTK	0,1	A	7.6-3, 7.6-4, 7.11-23, 7.13-29
dr.30	DSM winding resistance	061Eh	appl	np	---	0,000	250,000	LTK	0,001	Ohm	7.6-3, 7.6-11, 7.11-23

further on next side

Parameter		Addr.	R	P	E	Lower limit	Upper limit	Default	Step	Unit	See on page
dr.31	DSM winding inductance	061Fh	appl	np	---	0,01	500,00	LTK	0,01	mH	7.6-3, 7.6-10, 7.11-23
dr.32	DSM rated power	0620h	RO	np	---	0,01	1000,00	LTK	0,01	kW	7.2-13, 7.8-9, 7.8-10, 7.11-23
dr.33	DSM max. torque	0621h	appl	np	---	0,1; 1	6553,5; 65535	LTK	0,1; 1	Nm	7.6-5, 7.8-9, 7.8-10, 7.11-23, 7.13-29
dr.34	Motor protection time min. Is/Id	0622h	appl	np	---	0,1	25,5	8,0	0,1	s	7.13-29
dr.34	Motor protection time min. Is/Id	0622h	appl	np	---	0,1	10,0	0,5	0,1	s	7.13-29
dr.35	Motor protection time Imax	0623h	appl	np	---	0,1	10,0	0,2	0,1	s	7.13-29
dr.36	Motor protection recovery time	0624h	appl	np	---	0,1	300,0	5,0	0,1	s	7.13-30
dr.37	Maximum current	0625h	appl	np	---	0,0	1100,0	LTK	0,1	A	7.8-4, 7.8-12, 7.8-14, 7.10-4, 7.15-5
dr.37	Maximum current	0625h	appl	P	---	0,0	1100,0	LTK	0,1	A	7.8-4, 7.8-12, 7.8-14, 7.10-4, 7.15-5
dr.39	DSM corner speed 1	0627h	appl	np	---	0	64000; 8000	32000; 4000	1; 0,125	rpm	7.8-9, 7.8-10
dr.40	DSM corner max. torque 2	0628h	appl	np	---	0,1; 1	6553,5; 65535	0,1; 1	0,1; 1	Nm	7.8-10
dr.41	DSM corner speed 2	0629h	appl	np	---	0	64000; 8000	32000; 4000	1; 0,125	rpm	5.1-4
dr.42	DSM corner max. torque 3	062Ah	appl	np	---	0,1; 1	6553,5; 65535	0,1; 1	0,1; 1	Nm	5.1-4
dr.43	DSM corner speed 3	062Bh	appl	np	---	0	64000; 8000	32000; 4000	1; 0,125	rpm	5.1-4
dr.44	DSM corner max. torque 4	062Ch	appl	np	---	0,1; 1	6553,5; 65535	0,1; 1	0,1; 1	Nm	5.1-4
dr.45	DSM corner speed 4	062Dh	appl	np	---	0	64000; 8000	32000; 4000	1; 0,125	rpm	5.1-4
dr.46	DSM corner max. torque 5	062Eh	appl	np	---	0,1; 1	6553,5; 65535	0,1; 1	0,1; 1	Nm	5.1-4
dr.47	DSM corner speed 5	062Fh	appl	np	---	0	64000; 8000	32000; 4000	1; 0,125	rpm	5.1-4
dr.48	Motor identification	0630h	appl	np	E	0	255	0	1	---	7.5-17, 7.5-18, 7.5-19, 7.5-20, 7.5-21, 7.5-22, 7.5-23, 7.5-24, 7.6-8, 7.6-9, 7.6-10, 7.6-11, 7.6-12
dr.49	Lh identification acc/dec time	0631h	appl	np	---	0,00	300,00	5,00	0,01	s	7.5-18, 7.5-21, 7.5-22, 7.6-10, 7.6-11
dr.50	Motor protection min. Is/Id	0632h	appl	np	---	100	500	150	1	%	7.13-29, 7.13-30
dr.51	Motor temperature Rs correction	0633h	appl	np	---	0	200	20	1	degree	7.3-19
dr.52	Temperature coefficient	0634h	appl	np	---	0,0: off	25,0	0,0: off	0,1	---	
dr.53	Rs correction delta temperature	0635h	appl	np	---	0: off	200	0: off	1	degree	
dr.54	Rs correction warning time	0636h	appl	np	---	240	16000	4000	1	s	
dr.55	Rs correction cooling time	0637h	appl	np	---	240	16000	4000	1	s	
dr.56	Rs correction max. temperature	0638h	appl	np	---	30	200	90	1	degree	
dr.58	Torque offset selector	063Ah	appl	np	E	0	79	0	1	---	7.5-22, 7.6-11
dr.59	Torque offset	063Bh	appl	np	---	-320,00	320,00	0,00	0,01	Nm	7.5-22, 7.6-11
dr.60	Rs correction auto temperature mode	063Ch	appl	np	---	0: off	1: on	0: off	1	---	
dr.61	Rs correction auto temperature input selection	063Dh	appl	np	E	0	4095	0	1	---	7.3-9, 7.3-11
dr.62	State motor identification	063Eh	RO	np	---	0	255	0	1	---	7.5-18, 7.6-9
dr.63	DSM EMC HR (Vpk/1000rpm)	063Fh	appl	np	---	0	255,996	0	0,004	---	7.6-3, 7.6-4, 7.6-11
dr.64	DSM winding inductance maximum	0640h	appl	np	---	0,01	500,00	LTK	0,01	mH	
dr.65	DASM head inductance 50% flux	0641h	appl	P	---	99	305	99	0,006	%	
dS.00	Kp current	1100h	appl	P	---	0	32767	1500 Adpt	1	---	7.5-13, 7.6-5, 7.10-3
dS.00	Kp current	1100h	appl	np	---	0	32767	1500 Adpt	1	---	7.5-13, 7.6-5, 7.10-3
dS.01	Ki current	1101h	appl	np	---	0	32767	1500 Adpt	1	---	7.5-13, 7.6-5, 7.10-3
dS.01	Ki current	1101h	appl	P	---	0	32767	1500 Adpt	1	---	7.5-13, 7.6-5, 7.10-3
dS.02	Current decoupling	1102h	appl	np	E	0: off	2	0: off	1	---	7.10-3
dS.02	Current decoupling	1102h	appl	np	E	0: off	1	0: off	1	---	7.10-3
dS.02	Current decoupling	1102h	appl	P	E	0: off	2	0: off	1	---	7.10-3

further on next side

Parameter		Addr.	R	P	E	Lower limit	Upper limit	Default	Step	Unit	See on page
dS.03	Current/torque mode	1103h	appl	np	E	0	63	0	1	---	7.8-5, 7.8-10, 7.8-11, 7.8-12, 7.8-13, 7.10-3, 7.10-4, 7.15-5
dS.03	Current/torque mode	1103h	appl	P	E	0	63	0	1	---	7.8-5, 7.8-10, 7.8-11, 7.8-12, 7.8-13, 7.10-3, 7.10-4, 7.15-5
dS.04	Flux/rotor adaption mode	1104h	appl	P	E	0	511	0	1	---	7.5-17, 7.5-22, 7.5-23, 7.5-30, 7.8-3
dS.04	Flux/rotor adaption mode	1104h	appl	np	E	0	511	0	1	---	7.5-17, 7.5-22, 7.5-23, 7.5-30, 7.8-3
dS.04	Flux/rotor adaption mode	1104h	appl	np	E	0	511	24	1	---	7.5-17, 7.5-22, 7.5-23, 7.5-30, 7.8-3
dS.07	KI rotor adaption	1107h	appl	P	---	0	32767	1000	1	---	
dS.08	KP Umax	1108h	appl	np	---	0	32767	0	1	---	7.8-3
dS.08	KP Umax	1108h	appl	P	---	0	32767	0	1	---	7.8-3
dS.09	KI Umax	1109h	appl	np	---	0	32767	50	1	---	7.8-3
dS.09	KI Umax	1109h	appl	P	---	0	32767	50	1	---	7.8-3
dS.10	Umax modulation reference	110Ah	appl	P	---	0	110	97	1	%	7.8-3
dS.10	Umax modulation reference	110Ah	appl	np	---	0	110	97	1	%	7.8-3
ds.11	KP flux	110Bh	appl	P	---	0	32767	1000	1	---	7.5-13, 7.5-23
ds.12	KI flux	110Ch	appl	P	---	0	32767	300	1	---	7.5-13, 7.5-23
dS.13	Magnetizing current limit	110Dh	appl	np	---	0	1100,0	0	0,1	A	7.5-13, 7.5-23, 7.8-4, 7.8-7, 7.8-8, 7.8-9, 7.8-10, 7.8-12
dS.13	Magnetizing current limit	110Dh	appl	P	---	0	1100,0	0	0,1	A	7.5-13, 7.5-23, 7.8-4, 7.8-7, 7.8-8, 7.8-9, 7.8-10, 7.8-12
dS.14	Kp speed calculation ASCL	110Eh	appl	P	---	0	32767	1500	1	---	7.5-13, 7.5-29
dS.15	Ki speed calculation ASCL	110Fh	appl	P	---	0	32767	1500	1	---	7.5-13, 7.5-29
dS.17	Speed PT1 time ASCL	1111h	appl	P	---	0	9	3	1	---	7.5-29
dS.18	Function mode	1112h	appl	P	---	0	127	0	1	---	7.5-26, 7.5-28
dS.19	Limit uf-control deceleration ASCL	1113h	appl	P	---	0	32000; 4000	0	1; 0,125	rpm	7.5-13, 7.5-25
dS.20	Delay time uf-control	1114h	appl	P	---	-1	4000	0	1	ms	7.5-25, 7.5-26
dS.21	Start-up speed	1115h	appl	P	---	0	n * 4000	0	n * 0,125	rpm	7.5-25, 7.5-27
dS.22	Start-up time	1116h	appl	P	---	0,00	300,00	5,00	0,01	s	7.5-25, 7.5-27
dS.23	Observer factor	1117h	appl	P	---	0	100	0,02	0,006	%	
dS.24	Ki current multiplier	1118h	appl	np	---	0	65535	65535	1	---	
dS.24	Ki current multiplier	1118h	appl	P	---	0	65535	65535	1	---	
dS.25	Current decoupling time	1119h	appl	np	---	0,000	4095,938	0,000	0,063	ms	
dS.26	Wait for minimum flux	111Ah	appl	P	---	40	110	95	0,006	%	
Ec.00	Encoder 1 interface	1000h	appl	np	E	-127	127	GBK	1	---	7.11-11, 7.11-12, 7.11-26, 7.13-8
Ec.01	Encoder 1 (inc/r)	1001h	appl	np	E	1	65535	GBK	1	inc	7.11-12, 7.11-15, 7.11-16, 7.11-22, 7.11-23, 7.11-28
Ec.02	Absolute position encoder 1	1002h	appl	np	E	0	65535	57057	1	---	7.6-6, 7.6-7, 7.11-18, 7.11-23
Ec.03	Time 1 for speed calculation	1003h	appl	np	E	0	9	3	1	---	7.11-12, 7.11-23, 7.11-27
Ec.04	Gear 1 numerator	1004h	appl	np	---	-32000	32000	1000	1	---	7.11-14, 7.11-15, 7.11-16
Ec.04	Gear 1 numerator	1004h	appl	np	E	-32000	32000	1000	1	---	7.11-14, 7.11-15, 7.11-16
Ec.05	Gear 1 denominator	1005h	appl	np	---	1	32000	1000	1	---	7.11-14, 7.11-15, 7.11-16, 7.11-28
Ec.05	Gear 1 denominator	1005h	appl	np	E	1	32000	1000	1	---	7.11-14, 7.11-15, 7.11-16, 7.11-28
Ec.06	Encoder 1 rotation	1006h	appl	np	E	0	19	0	1	---	7.5-15, 7.11-12, 7.11-13
Ec.07	Encoder 1 trigger	1007h	appl	np	E	0	13	GBK	1	---	7.6-7, 7.11-14
Ec.08	Encoder 1 excitation	1008h	appl	np	E	-1,94	9,14	6,10	0,14	kHz	
Ec.10	Encoder 2 interface	100Ah	appl	np	E	-127	127	GBK	1	---	7.11-6, 7.11-11, 7.11-12
Ec.11	Encoder 2 (inc/r)	100Bh	appl	np	E	1	65535	GBK	1	inc	7.11-12, 7.11-15
Ec.12	Absolute position encoder 2	100Ch	appl	np	E	0	65535	57057	1	---	7.6-6, 7.6-7, 7.11-18
Ec.13	Time 2 for speed calculation	100Dh	appl	np	E	0	9	3	1	---	7.11-12
Ec.14	Gear 2 numerator	100Eh	appl	np	---	-32000	32000	1000	1	---	7.11-14, 7.11-16, 7.11-17
Ec.15	Gear 2 denominator	100Fh	appl	np	---	1	32000	1000	1	---	7.11-14
Ec.16	Encoder 2 rotation	1010h	appl	np	E	0	19	0	1	---	7.11-12, 7.11-13
Ec.17	Encoder 2 trigger	1011h	appl	np	E	0	13	GBK	1	---	7.11-14
Ec.20	Encoder 2 operating mode	1014h	appl	np	---	0	3	GBK	1	---	7.11-7, 7.11-11

further on next side

Parameter		Addr.	R	P	E	Lower limit	Upper limit	Default	Step	Unit	See on page
Ec.21	SSI multiturn resolution	1015h	appl	np	E	0	13	12	1	---	7.11-20
Ec.22	SSI clock frequency selection	1016h	appl	np	---	0	1	0	1	---	7.11-20
Ec.23	SSI data code	1017h	appl	np	---	0	1	1	1	---	7.11-20
Ec.24	SSI power failure bit	1018h	appl	np	---	0: off	1: on	0: off	1	---	7.11-20
Ec.25	Nominal tacho speed	1019h	appl	np	---	1	16000; 2000	1500; 187,5	1; 0,125	rpm	7.11-21
Ec.27	Operation mode output	101Bh	appl	np	E	0	127	0	1	---	7.11-11, 7.11-18
Ec.29	Position channel 1 direct	101Dh	RO	np	---	-2^31	2^31-1	0	1	inc	
Ec.30	Position channel 2 direct	101Eh	RO	np	---	-2^31	2^31-1	0	1	inc	
Ec.31	Position channel 1	101Fh	RO	np	---	-2^31	2^31-1	0	1	inc	7.3-11, 7.11-19
Ec.32	Position channel 2	1020h	RO	np	---	-2^31	2^31-1	0	1	inc	7.3-11, 7.11-19
Ec.33	System offset channel 1	1021h	appl	np	E	-2^31	2^31-1	0	1	inc	7.11-19
Ec.34	System offset channel 2	1022h	appl	np	E	-2^31	2^31-1	0	1	inc	7.11-19
Ec.36	Encoder 1 encoder type	1024h	RO	np	---	GBK	GBK	GBK	1	---	7.11-22, 7.11-24, 7.11-25
Ec.37	Encoder 1 encoder status	1025h	RO	np	---	0	255	0	1	---	7.11-22, 7.11-23, 7.11-24, 7.11-25
Ec.38	Encoder 1 encoder r/w	1026h	appl (rd) sup (st)	np	E	0	30	4	1	---	7.11-23, 7.11-24, 7.11-26
Ec.38	Encoder 1 encoder r/w	1026h	appl (rd) sup (st)	np	E	0	30	0	1	---	7.11-23, 7.11-24, 7.11-26
Ec.39	Encoder 1 over transmission	1027h	appl	np	E	0	5	0	1	---	7.11-15, 7.11-16
Ec.39	Encoder 1 over transmission	1027h	appl	np	E	0	4	0	1	---	7.11-15, 7.11-16
Ec.40	Actual absolute position electronically	1028h	RO	np	---	0	65535	0	1	---	
Ec.41	Mode display multiturn	1029h	appl	np	E	0	15	0	1	---	
Ec.42	Encoder alarm mode	102Ah	appl	np	---	0	15	0	1	---	7.11-21, 7.11-22
Ec.42	Encoder alarm mode	102Ah	appl	np	---	0	15	1	1	---	7.11-21, 7.11-22
Ec.43	SSI data code channel 1	102Bh	appl	np	E	0	1	0	1	---	7.11-19
Ec.44	SSI absolute resolution channel 1	102Ch	appl	np	E	0	13	10	1	---	
Ec.45	UVW commutation per revolution	102Dh	appl	np	E	0	127	0	1	---	
Ec.46	PT1 time channel 1	102Eh	appl	np	---	0	256	0	1	ms	
Ec.47	PT1 time channel 2	102Fh	appl	np	---	0	256	0	1	ms	
Ec.48	Scan channel 2 input selection	1030h	appl	np	E	0	4095	0	1	---	7.3-9
Ec.49	Scan channel 1+ channel 2 input selection	1031h	appl	np	E	0	4095	0	1	---	7.3-9
Ec.50	Scan position Ec.60	1032h	RO	np	---	-2^31	2^31-1	0	1	inc	7.3-11
Ec.51	Scan position Ec.61	1033h	RO	np	---	-2^31	2^31-1	0	1	inc	7.3-11
Ec.53	Encoder 1 SSI multiturn resolution	1035h	appl	np	E	0	13	0	1	---	7.11-19
Ec.54	Encoder 1 SSI mode	1036h	appl	np	E	0	2	0	1	---	7.11-19
Ec.55	Encoder 2 SSI mode	1037h	appl	np	E	0	2	0	1	---	7.11-20
Ec.56	Gear 1 numerator	1038h	appl	np	---	-2^30	2^30-1	0	1	---	7.11-14
Ec.57	Gear 1 denominator (long)	1039h	appl	np	---	1	2^30-1	1000	1	---	7.11-14
Ec.58	Gear 2 numerator	103Ah	appl	np	---	-2^30	2^30-1	0	1	---	7.11-14
Ec.59	Gear 2 denominator (long)	103Bh	appl	np	---	1	2^30-1	1000	1	---	7.11-14
Ec.60	System position channel 1	103Ch	RO	np	---	-2^31	2^31-1	0	1	inc	7.11-19
Ec.61	System position channel 2	103Dh	RO	np	---	-2^31	2^31-1	0	1	inc	7.11-19
Fh.01	Factor 1	1501h	appl	np	---	-131068	131068	0	1	---	
Fh.02	Factor 2	1502h	appl	np	---	-131068	131068	0	1	---	
Fh.03	Factor 3	1503h	appl	np	---	-131068	131068	0	1	---	
Fh.04	Factor 4	1504h	appl	np	---	-131068	131068	0	1	---	
Fh.05	Factor 5	1505h	appl	np	---	-131068	131068	0	1	---	
Fh.06	Factor 6	1506h	appl	np	---	-131068	131068	0	1	---	
Fh.09	Factor 9	1509h	appl	np	---	-131068	131068	0	1	---	
Fr.01	Copy parameter set	0901h	appl	P	E	-9	7	0	1	---	7.6-12, 7.14-3, 7.14-4, 7.14-5, 7.14-6, 7.14-7
Fr.02	Parameter set source	0902h	appl	np	E	0	5	0	1	---	7.14-3, 7.14-8, 7.14-9, 7.14-10, 7.14-11
Fr.03	Parameter set lock	0903h	appl	np	E	0	255	0	1	---	7.13-7, 7.14-11
Fr.04	Parameter set setting	0904h	appl	np	E	0	7	0	1	---	7.14-8, 7.14-9
Fr.05	Set activation delay	0905h	appl	P	---	0,00	32,00	0,00	0,01	s	7.14-12
Fr.06	Set deactivation delay	0906h	appl	P	---	0,00	32,00	0,00	0,01	s	7.14-12

further on next side

Parameter		Addr.	R	P	E	Lower limit	Upper limit	Default	Step	Unit	See on page
Fr.07	Parameter set input selection	0907h	appl	np	E	0	4095	0	1	---	7.3-9, 7.3-10, 7.14-9, 7.14-10
Fr.08	Motor set classification	0908h	appl	P	E	0	7	0	1	---	7.13-28, 7.13-29
Fr.09	Bus parameter set	0909h	appl	np	---	-1: act set	7	0	1	---	7.14-4, 7.14-5
Fr.10	Load motor dependent parameter	090Ah	appl	P	E	1	3	1	1	---	7.5-9, 7.5-12, 7.5-14, 7.5-23, 7.5-25, 7.6-5, 7.6-12, 7.6-13, 7.6-17, 7.7-3, 7.10-3, 7.11-18, 7.11-24, 7.11-27, 7.14-3, 7.14-9
Fr.10	Load motor dependent parameter	090Ah	appl	np	E	1	2	1	1	---	7.5-9, 7.5-12, 7.5-14, 7.5-23, 7.5-25, 7.6-5, 7.6-12, 7.6-13, 7.6-17, 7.7-3, 7.10-3, 7.11-18, 7.11-24, 7.11-27, 7.14-3, 7.14-9
Fr.11	Reset set 0 input selection	090Bh	appl	np	E	0	4095	0	1	---	7.3-9, 7.3-10, 7.14-11
Fr.12	Set change mode modulation on	090Ch	appl	np	E	0	3	2	1	---	7.14-11
Fr.12	Set change mode modulation on	090Ch	appl	np	E	0	3	0	1	---	7.14-11
In.00	Inverter type	0E00h	RO	np	---	0	65535	0	1	hex	7.1-23
In.01	Rated inverter current	0E01h	RO	np	---	LTK	LTK	LTK	0,1	A	7.1-23, 7.2-13, 7.13-14, 7.13-19, 7.13-24, 7.13-26
In.03	Max. carrier frequency	0E03h	RO	np	---	0	4	LTK	1	---	7.1-24
In.04	Rated carrier frequency	0E04h	RO	np	---	0	LTK	LTK	1	---	7.1-24
In.06	Software version	0E06h	RO	np	---	SW	SW	SW	0,01	---	7.1-24
In.07	Software date	0E07h	RO	np	---	SW	SW	SW	0,1	---	
In.10	Serial no.(date)	0E0Ah	sup	np	---	0	65535	0	1	---	7.1-25
In. 11	Serial no.(count)	0E0Bh	sup	np	---	0	65535	0	1	---	7.1-25
In.12	Serial no.(AB-no.high)	0E0Ch	sup	np	---	0	65535	0	1	---	7.1-25
In. 13	Serial no.(AB-no.low)	0E0Dh	sup	np	---	0	65535	0	1	---	7.1-25
In.14	Customer no. high	0E0Eh	sup	np	---	0	65535	0	1	---	7.1-25
In.15	Customer no. low	0E0Fh	sup	np	---	0	65535	0	1	---	7.1-25
In.16	QS-Number	0E10h	sup	np	---	0	65535	0	1	---	7.1-25
In. 17	Temperature - mode	0E11h	RO	np	---	LTK	LTK	LTK	1	hex	7.1-25
In.18	Hardware current inverter	0E12h	RO	np	---	LTK	LTK	LTK	0,1	A	7.5-17, 7.6-8, 7.6-17
In.20	KEB service slector	0E14h	sup	np	E	0	34	0	1	---	7.5-28, 7.16-12
In.21	KEB service data	0E15h	sup	np	---	KEB service data	KEB service data	KEB service data	1	---	7.5-28
In.22	User parameter 1	0E16h	appl	np	---	0	65535	0	1	---	7.1-25
In.23	User parameter 2	0E17h	appl	np	---	0	65535	0	1	---	7.1-25
In. 24	Last error	0E18h	sup	P	E	0	255	0	1	---	7.1-25, 7.11-26
In. 25	Error diagnosis	0E19h	RO	P	---	0	65535	0	1	hex	8.1-3
In.26	E.OC error counter	0E1Ah	sup	np	---	0	65535	0	1	---	7.1-26
In.27	E.OL error counter	0E1Bh	sup	np	---	0	65535	0	1	---	7.1-26
In.28	E.OP error counter	0E1Ch	sup	np	---	0	65535	0	1	---	7.1-26
In. 29	E.OH error counter	0E1Dh	sup	np	---	0	65535	0	1	---	7.1-26
In.30	E.OHI error counter	0E1Eh	sup	np	---	0	65535	0	1	---	7.1-26
In.31	KEB-Hiperface	0E1Fh	RO	np	---	0	65535	GBK	1	---	7.1-26
In.32	Interface software date	0E20h	RO	np	---	0	6553,5	GBK	0,1	---	7.1-26
In.33	Interface software version	0E21h	RO	np	---	0	655,35	GBK	0,01	---	
In.34	LTK data Id	0E22h	sup	np	E	0	20	0	1	---	
In.35	LTK data index	0E23h	sup	np	---	-1	LTK data Id	-1	1	---	
In.36	LTK value index	0E24h	sup	np	E	0	LTK	0	1	---	
In.37	LTK data	0E25h	RO	np	---	0	65535	0	1	---	
In.39	Deadtime selector	0E27h	appl	np	E	0	329	0	1	---	7.6-11
In.40	Deadtime	0E28h	appl	np	---	0	255	0	1	---	7.6-11
LE.00	Comparison level 0	0D00h	appl	P	---	-10737418,24	10737418,23	0,00	0.01	---	7.3-18, 7.3-20
LE.01	Comparison level 1	0D01h	appl	P	---	-10737418,24	10737418,23	0,00	0.01	---	7.3-24
LE.02	Comparison level 2	0D02h	appl	P	---	-10737418,24	10737418,23	100,00	0.01	---	7.3-24
LE.03	Comparison level 3	0D03h	appl	P	---	-10737418,24	10737418,23	4,00	0.01	---	
LE.04	Comparison level 4	0D04h	appl	P	---	-10737418,24	10737418,23	0,00	0.01	---	
LE.05	Comparison level 5	0D05h	appl	P	---	-10737418,24	10737418,23	0,00	0.01	---	
LE.06	Comparison level 6	0D06h	appl	P	---	-10737418,24	10737418,23	0,00	0.01	---	
LE.07	Comparison level 7	0D07h	appl	P	---	-10737418,24	10737418,23	0,00	0.01	---	7.3-18, 7.3-20
LE.08	Hysteresis 0	0D08h	appl	P	---	0,00	300,00	0,00	0.01	---	7.3-20
LE.09	Hysteresis 1	0D09h	appl	P	---	0,00	300,00	0,00	0.01	---	7.3-20, 7.3-24

further on next side

Parameter		Addr.	R	P	E	Lower limit	Upper limit	Default	Step	Unit	See on page
LE.10	Hysteresis 2	0D0Ah	appl	P	---	0,00	300,00	5,00	0.01	---	7.3-24
LE.11	Hysteresis 3	0D0Bh	appl	P	---	0,00	300,00	0,50	0.01	---	
LE.12	Hysteresis 4	0D0Ch	appl	P	---	0,00	300,00	0,00	0.01	---	
LE.13	Hysteresis 5	0D0Dh	appl	P	---	0,00	300,00	0,00	0.01	---	
LE.14	Hysteresis 6	0D0Eh	appl	P	---	0,00	300,00	0,00	0.01	---	
LE.15	Hysteresis 7	0D0Fh	appl	P	---	0,00	300,00	0,00	0.01	---	7.3-20
LE.16	Frequency/speed hysteresis	0D10h	appl	np	---	0	n*200	n*15	n * 0,125	rpm	7.3-16, 7.3-20, 7.15-4
LE.17	Timer 1 start input selection	0D11h	appl	np	E	0	4095	0	1	---	7.3-9, 7.3-10, 7.15-10, 7.15-11
LE.18	Timer 1 start condition	0D12h	appl	np	E	0	15	0	1	---	7.15-10, 7.15-11, 7.15-12
LE.19	Timer 1 reset input selection	0D13h	appl	np	E	0	4095	0	1	---	7.3-9, 7.3-10, 7.15-10, 7.15-12
LE.20	Timer 1 reset condition	0D14h	appl	np	E	0	31	16	1	---	7.15-10, 7.15-12
LE.21	Timer 1 mode	0D15h	appl	np	---	0	63	0	1	---	7.15-11, 7.15-12
LE.22	Timer 2 start input selection	0D16h	appl	np	E	0	4095	0	1	---	7.3-9, 7.3-10, 7.15-11, 7.15-12
LE.23	Timer 2 start condition	0D17h	appl	np	E	0	15	0	1	---	7.15-11, 7.15-11
LE.24	Timer 2 reset input selection	0D18h	appl	np	E	0	4095	0	1	---	7.3-9, 7.3-10, 7.15-11, 7.15-12
LE.25	Timer 2 reset condition	0D19h	appl	np	E	0	31	16	1	---	7.15-11, 7.15-12
LE.26	Timer 2 mode	0D1Ah	appl	np	---	0	63	0	1	---	7.15-11
LE.27	Reference torque	0D1Bh	appl	np	---	0,00	32000,00	0,00	0,01	Nm	7.8-14, 7.8-15
nn.00	Motor model select	1400h	appl	np	E	0	32767	191	1	---	7.6-8, 7.6-11, 7.6-14, 7.6-16, 7.6-17, 7.6-18
nn.01	Stabilisation current	1401h	appl	np	---	0	1100,0	0	0,1	A	7.6-5, 7.6-13, 7.6-14, 7.6-15, 7.6-16, 7.6-17
nn.02	Minimum speed for current	1402h	appl	np	---	0	32000; 4000	0	1; 0,125	rpm	7.6-5, 7.6-14, 7.6-15
nn.03	Maximum speed for current	1403h	appl	np	---	0	32000; 4000	0	1; 0,125	rpm	7.6-5, 7.6-14, 7.6-15
nn.04	Time speed calculation	1404h	appl	np	---	0,000	4095,938	0,125	0,063	ms	7.6-17
nn.05	Filter speed calculation	1405h	appl	np	---	0,000	4095,938	1,000	0,063	ms	7.6-17
nn.06	RS adaption factor	1406h	appl	np	---	0	32767	100	1	---	7.6-17
nn.07	Observer factor	1407h	appl	np	---	0	60,00	2,00	0,0015	%	7.6-17
nn.08	Start-up speed	1408h	appl	np	---	0	n * 4000	0	n * 0,125	rpm	7.6-14, 7.6-15
nn.09	Start-up time	1409h	appl	np	---	0,00	300,00	5,00	0,01	s	7.6-14
nn.10	Standstill current	140Ah	appl	np	---	0	1100,0	0	0,1	A	7.6-5, 7.6-13, 7.6-16, 7.6-17
nn.11	Stabilisation time	140Bh	appl	np	---	0,000	4095,938	0,250	0,063	ms	7.6-5
nn.12	Deviation control time	140Ch	appl	np	---	0,000	4095,938	10,000	0,063	ms	7.6-18
nn.13	C filter [uF]	140Dh	appl	np	---	0,00	655,35	0,00	0,01	---	7.6-19
nn.14	Amplitude HF injection	140Eh	appl	np	---	0	16383	1500	1	---	
nn.15	Optimization HF injection	140Fh	appl	np	E	20	15,0	4,0	0,1	---	
nn.16	Ki HF detection	1410h	appl	np	---	0	32767	1500	1	---	
nn.17	Open loop speed	1411h	appl	np	---	0	n * 4000	0	n * 0,125	rpm	
oP.00	Reference source	0300h	appl	P	E	0	10	0	1	---	7.4-4, 7.4-5, 7.12-80
oP.01	Rotation source	0301h	appl	P	E	0	10	7	1	---	7.4-7, 7.4-8, 7.4-9, 7.4-10, 7.4-11, 7.12-4, 7.12-80, 7.15-16
oP.02	Rotation setting	0302h	appl	P	E	0	2	0	1	---	7.4-7, 7.4-8, 7.4-10
oP.03	Reference setting	0303h	appl	P	---	n*-4000	n * 4000	0	n * 0,125	rpm	7.4-4, 7.12-79, 7.12-80
oP.05	Reference setting %	0305h	appl	P	---	-100,0	100,0	0,0	0,1	%	7.2-10, 7.4-4
oP.06	Min. reference forward	0306h	appl	P	---	0	n * 4000	0	n * 0,125	rpm	7.3-19, 7.4-4, 7.4-5, 7.4-15
oP.07	Min. reference reverse	0307h	appl	P	---	n * -0,125: =For	n * 4000	n * -0,125: =For	n * 0,125	rpm	7.3-19, 7.4-4, 7.4-5, 7.4-15

further on next side

Parameter		Addr.	R	P	E	Lower limit	Upper limit	Default	Step	Unit	See on page
oP.10	Max. reference forward	030Ah	appl	P	---	0	n * 4000	n*2100	n * 0,125	rpm	7.4-4, 7.4-5, 7.4-13, 7.4-14, 7.4-15, 7.4-19, 7.4-21, 7.12-22, 7.12-28, 7.12-29, 7.12-35, 7.12-36, 7.12-38, 7.12-45, 7.12-46, 7.12-47
oP.11	Max. reference reverse	030Bh	appl	P	---	n * -0,125: =For	n * 4000	n * -0,125: =For	n * 0,125	rpm	7.4-4, 7.4-5, 7.4-13, 7.4-14, 7.4-15, 7.4-19, 7.12-22, 7.12-28
oP.14	Absolute max. reference forward	030Eh	appl	P	---	0	n * 4000	n * 4000	n * 0,125	rpm	7.4-5, 7.4-13, 7.4-14, 7.4-19, 7.12-14, 7.12-22, 7.12-28, 7.12-29, 7.12-79, 7.12-81
oP.15	Absolute max. reference reverse	030Fh	appl	P	---	n * -0,125: =For	n * 4000	n * -0,125: =For	n * 0,125	rpm	7.4-14, 7.4-19, 7.12-14, 7.12-22, 7.12-28, 7.12-79, 7.12-81
oP.18	Step value rotation source	0312h	appl	P	E	0	10	7	1	---	7.4-11, 7.4-12
oP.19	Step value input selection 1	0313h	appl	np	E	0	4095	16	1	---	7.3-9, 7.3-10, 7.4-11, 7.4-12, 7.12-46
oP.20	Step value input selection 2	0314h	appl	np	E	0	4095	32	1	---	7.3-9, 7.3-10, 7.4-11, 7.4-12
oP.21	Step value 1	0315h	appl	P	---	n*-4000	n * 4000	n *100	n * 0,125	rpm	7.4-11, 7.4-12
oP.22	Step value 2	0316h	appl	P	---	n*-4000	n * 4000	n*-100	n * 0,125	rpm	7.4-11, 7.4-12
oP.23	Step value 3	0317h	appl	P	---	n*-4000	n * 4000	n*0	n * 0,125	rpm	7.4-11, 7.4-12
oP.27	Acceleration/deceleration mode	031Bh	appl	P	E	0	255	0	1	---	7.4-18, 7.4-21
oP.28	Acceleration time forward	031Ch	appl	P	---	0,00	300,00	5,00	0,01	s	7.4-16, 7.4-17, 7.4-18, 7.4-20, 7.12-19, 7.12-20, 7.12-28, 7.12-29
oP.29	Acceleration time reverse	031Dh	appl	P	---	-0,01: =For	300,00	-0,01: =For	0,01	s	7.4-16, 7.4-18
oP.30	Deceleration time forward	031Eh	appl	P	---	-0,01: =Acc	300,00	5,00	0,01	s	7.4-16, 7.4-18
oP.31	Deceleration time reverse	031Fh	appl	P	---	-0,01: =For	300,00	-0,01: =For	0,01	s	7.4-16, 7.4-17, 7.4-18, 7.12-28
oP.32	S-curve time acceleration forward	0320h	appl	P	---	0,00: off	5,00	0,00: off	0,01	s	7.4-17, 7.4-18, 7.4-19, 7.12-28, 7.12-29
oP.33	S-curve time acceleration reverse	0321h	appl	P	---	-0,01: =For	5,00	-0,01: =For	0,01	s	7.4-18
oP.34	S-curve time deceleration forward.	0322h	appl	P	---	-0,01: =Acc	5,00	-0,01: =Acc	0,01	s	7.4-18
oP.35	S-curve time deceleration reverse	0323h	appl	P	---	-0,01: =For	5,00	-0,01: =For	0,01	s	7.4-18, 7.12-28
oP.40	Max. output value forward	0328h	appl	P	---	0	n * 4000	n * 4000	n * 0,125	rpm	7.4-14, 7.4-19, 7.6-17, 7.12-28
oP.41	Max. output value reverse	0329h	appl	P	---	n * -0,125: =For	n * 4000	n * -0,125: =For	n * 0,125	rpm	7.4-14, 7.4-19, 7.6-17
oP.44	Ext. function mode/source	032Ch	appl	P	E	0	79	0	1	---	7.15-18, 7.15-19, 7.15-21
oP.45	Ext. function digital source	032Dh	appl	P	---	0,00	100,00	0,00	0,01	%	7.15-24, 7.15-25, 7.15-27
oP.46	Ext. function acceleration/ deceleration time	032Eh	appl	P	---	0,00	20,00	10,00	0,01	s	7.15-25, 7.15-27, 7.15-28
oP.47	Sweep-generator accelera-tion time	032Fh	appl	P	---	0,00	20,00	10,00	0,01	s	7.15-25
oP.48	Sweep-generator decelera-tion time	0330h	appl	P	---	0,00	20,00	10,00	0,01	s	7.15-25
oP.49	Diameter correction dmin/ dmax	0331h	appl	P	---	0,010	0,990	0,500	0,001	---	7.15-27
oP.50	Motorpoti function	0332h	appl	np	E	0	7	0	1	---	7.15-7, 7.15-9
oP.52	Motorpoti value	0334h	appl	P	---	-100,00	100,00	0,00	0,01	%	7.4-4, 7.11-17, 7.11-18, 7.15-7, 7.15-9, 7.15-10
oP.53	Motorpoti min. value	0335h	appl	np	---	-100,00	100,00	0,00	0,01	%	7.11-17, 7.15-9
oP.54	Motorpoti max. value	0336h	appl	np	---	-100,00	100,00	100,00	0,01	%	7.11-17, 7.15-9
oP.55	Motorpoti reset value	0337h	appl	np	---	-100,00	100,00	0,00	0,01	%	7.15-7, 7.15-8, 7.15-9

further on next side

Parameter		Addr.	R	P	E	Lower limit	Upper limit	Default	Step	Unit	See on page
oP.56	Motorpoti increase input selection	0338h	appl	np	E	0	4095	0	1	---	7.3-9, 7.3-10, 7.15-7, 7.15-8
oP.57	Motorpoti decrease input selection	0339h	appl	np	E	0	4095	0	1	---	7.3-9, 7.3-10, 7.15-7, 7.15-8
oP.58	Motorpoti reset input selection	033Ah	appl	np	E	0	4095	0	1	---	7.3-9, 7.3-10, 7.15-7, 7.15-8
oP.59	Motorpoti increase/decrease time	033Bh	appl	P	---	0,00	50000,00	66,00	0,01	s	7.15-7, 7.15-9
oP.60	Direction forward input selection	033Ch	appl	np	E	0	4095	4	1	---	7.3-9, 7.3-10, 7.4-8, 7.4-9
oP.61	Direction reverse input selection	033Dh	appl	np	E	0	4095	8	1	---	7.3-9, 7.3-10, 7.4-8, 7.4-9
oP.62	Acceleration/deceleration time factor	033Eh	appl	np	E	0	4	0	1	---	7.4-17
oP.63	Reference value high-resolution	033Fh	appl	np	---	-2^31	2^31-1	0	1	---	7.4-4, 7.4-6, 7.4-7
oP.64	Relative value high-resolution	0340h	appl	P	---	n*600	n * 4000	n*2100	n * 0,125	rpm	7.4-4, 7.4-5, 7.4-6, 7.4-7
oP.65	Min. prohibit reference 1	0341h	appl	np	---	n*-4000	n * 4000	0	n * 0,125	rpm	7.4-15, 7.5-27
oP.66	Max. prohibit reference 1	0342h	appl	np	---	n*-4000	n * 4000	0	n * 0,125	rpm	7.4-15
oP.67	Min. prohibit reference 2	0343h	appl	np	---	n*-4000	n * 4000	0	n * 0,125	rpm	7.4-15
oP.68	Max. prohibit reference 2	0344h	appl	np	---	n*-4000	n * 4000	0	n * 0,125	rpm	7.4-15, 7.5-27
oP.69	Motorpoti deceleration time	0345h	appl	P	---	-0,01	50000,00	-0,01	0,01	s	
oP.70	S-curve up time acceleration forward	0346h	appl	P	---	-0,01: = low	5,00	-0,01: = low	0,01	s	7.12-28, 7.12-29
oP.71	S-curve up time acceleration reverse	0347h	appl	P	---	-0,02: =For	5,00	-0,01: = low	0,01	s	
oP.72	S-curve up time deceleration forward	0348h	appl	P	---	-0,02: =Acc	5,00	-0,01: = low	0,01	s	
oP.73	S-curve up time deceleration reverse	0349h	appl	P	---	-0,02: =Acc	5,00	-0,01: = low	0,01	s	7.12-28
oP.74	Reference splitting	034Ah	appl	np	---	0	127	0	1	ms	7.7-7, 7.7-8
Pn.00	Auto retry UP	0400h	appl	np	---	0: off	1: on	1: on	1	---	7.13-16
Pn.01	Auto retry OP	0401h	appl	np	---	0: off	1: on	0: off	1	---	7.13-16
Pn.02	Auto retry OC	0402h	appl	np	---	0: off	1: on	0: off	1	---	7.13-17
Pn.03	E.EF stopping mode	0403h	appl	np	---	0	6	0	1	---	7.13-5, 7.13-10, 7.13-11, 7.13-17
Pn.04	Ext. fault input select	0404h	appl	np	E	0	4095	64	1	---	7.3-9, 7.3-10, 7.13-5, 7.13-32
Pn.05	E.buS stopping mode	0405h	appl	np	---	0	6	6	1	---	7.12-79, 7.12-80, 7.12-81, 7.13-3, 7.13-6, 7.13-10, 7.13-11, 7.13-17
Pn.06	Watchdog time	0406h	appl	np	E	0,00: off	40,00	0,00: off	0,01	s	7.12-80, 7.12-81, 7.13-6
Pn.07	Prohibit rotation stopping mode	0407h	appl	np	---	0	6	6	1	---	7.12-4, 7.12-9, 7.12-29, 7.12-65, 7.13-3, 7.13-6, 7.13-10, 7.13-11, 7.13-17
Pn.08	Warning OL stopping mode	0408h	appl	np	---	0	6	6	1	---	7.13-10, 7.13-11, 7.13-17
Pn.09	OL warning level	0409h	appl	np	---	0	100	80	1	%	7.3-15
Pn.10	Warning OH stopping mode	040Ah	appl	np	---	0	6	6	1	---	7.13-3, 7.13-5, 7.13-10, 7.13-11, 7.13-17
Pn.11	OH warning level	040Bh	appl	np	---	0	90	70	1	degree	7.13-3, 7.13-5
Pn.12	Warning dOH stopping mode	040Ch	appl	np	---	0	8	6	1	---	7.13-7, 7.13-10, 7.13-11, 7.13-12, 7.13-17
Pn.13	E.dOH delay time	040Dh	appl	np	---	0	120	0	1	s	7.13-7
Pn.14	Warning OH2 stopping mode	040Eh	appl	np	---	0	6	6	1	---	7.13-7, 7.13-10, 7.13-11, 7.13-17, 7.13-27, 7.13-28, 7.13-29, 7.13-30
Pn.15	OH2 warning level	040Fh	appl	np	---	0	100	100	1	%	7.13-7, 7.13-30
Pn.16	Warning OHI stopping mode	0410h	appl	np	---	0	7	7	1	---	7.13-5, 7.13-10, 7.13-11, 7.13-12, 7.13-17
Pn.17	E.OHI delay time	0411h	appl	np	---	0	120	0	1	s	7.13-5

further on next side

Parameter		Addr.	R	P	E	Lower limit	Upper limit	Default	Step	Unit	See on page
Pn.18	E.Set stopping mode	0412h	appl	np	---	0	6	0	1	---	7.13-7, 7.13-10, 7.13-11, 7.13-17, 7.14-11
Pn.19	Stall mode	0413h	appl	P	E	0	255	0	1	---	7.13-24, 7.13-25, 7.13-26
Pn.20	Stall level	0414h	appl	P	---	0	200: off	200: off	1	%	7.13-24, 7.13-25, 7.13-26
Pn.21	Stall acceleration/decelera-tion time	0415h	appl	P	---	0	300,00	2,00	0,01	s	7.13-24, 7.13-25, 7.13-26
Pn.22	LAD stop function	0416h	appl	P	E	0	7	0	1	---	7.13-22, 7.13-23, 7.13-24
Pn.23	LAD stop input selection	0417h	appl	np	E	0	4095	0	1	---	7.3-9, 7.3-10, 7.13-22, 7.13-23
Pn.24	LAD load level	0418h	appl	P	---	0	200	140	1	%	7.13-22
Pn.25	LD voltage	0419h	appl	P	---	200	1200	375; 720; 1100	1	V	7.13-21
Pn.26	Speed search condition	041Ah	appl	P	E	0	31	8	1	---	7.5-27, 7.6-13, 7.13-21
Pn.27	Speed search mode	041Bh	appl	np	E	0	255	88	1	---	7.13-9
Pn.28	DC braking Mode	041Ch	appl	P	E	0	506	7	1	---	7.5-27, 7.15-4
Pn.29	DC brake input selection	041Dh	appl	np	E	0	4095	0	1	---	7.3-9, 7.3-10, 7.15-3, 7.15-4
Pn.30	DC braking time	041Eh	appl	P	---	0,00	100,00	10,00	0,01	s	7.15-3, 7.15-4, 7.15-5
Pn.31	DC braking max. voltage	041Fh	appl	P	---	0,0	25,5	25,5	0,1	%	7.15-5
Pn.32	DC braking start level	0420h	appl	P	---	0	n * 4000	n*120	n * 0,125	rpm	7.15-3, 7.15-4, 7.15-5
Pn.33	DC braking maximum current ASCL	0421h	appl	P	---	0,0	400,0	100,0	0,1	%	7.5-27, 7.15-5
Pn.34	Brake control mode	0422h	appl	P	E	0	4	0	1	---	7.6-8, 7.15-13, 7.15-14, 7.15-15
Pn.34	Brake control mode	0422h	appl	P	E	0	4	2	1	---	7.6-8, 7.15-13, 7.15-14, 7.15-15
Pn.35	Premagnetizing time	0423h	appl	P	---	0,00	100,00	0,25	0,01	s	7.6-13, 7.15-13, 7.15-14
Pn.35	Premagnetizing time	0423h	appl	P	---	0,00	100,00	1,00	0,01	s	7.6-13, 7.15-13, 7.15-14
Pn.36	Brake release time	0424h	appl	P	---	0,00	100,00	0,25	0,01	s	7.3-11, 7.6-13, 7.15-13, 7.15-14
Pn.37	Brake control start reference	0425h	appl	P	---	n*-600	n*600	0	n * 0,125	rpm	7.15-13, 7.15-14, 7.15-15
Pn.38	Brake fadeout time	0426h	appl	P	---	0,00	0,50	0,00	0,01	s	
Pn.39	Brake delay time	0427h	appl	P	---	0,00	100,00	0,25	0,01	s	7.15-13, 7.15-14
Pn.40	Brake closing time	0428h	appl	P	---	0,00	100,00	0,25	0,01	s	7.3-11, 7.15-13, 7.15-14
Pn.41	Brake control stop reference	0429h	appl	P	---	n*-600	n*600	0	n * 0,125	rpm	7.15-13, 7.15-14, 7.15-15
Pn.42	Brake check input selection	042Ah	appl	np	E	0	4095	0	1	---	7.3-11
Pn.43	Min. load brake control	042Bh	appl	P	---	0: off	100	0: off	1	%	7.15-13, 7.15-14, 7.15-15
Pn.44	Power off mode	042Ch	appl	np	E	0	511	0	1	---	7.15-16, 7.15-17, 7.15-18, 7.15-19, 7.15-20, 7.15-21, 7.15-22, 7.15-23
Pn.45	Power off start voltage	042Dh	appl	np	---	200	1200	290; 500; 860	1	V	7.15-16, 7.15-17, 7.15-19
Pn.46	Power off auto start level	042Eh	appl	np	---	50	90	80	1	%	7.15-17, 7.15-19
Pn.46	Power off auto start level	042Eh	appl	np	---	50	100	80	1	%	7.15-17, 7.15-19
Pn.47	Power off brake torque	042Fh	appl	np	---	0,0	100,0	0,0	0,1	%	7.15-16, 7.15-19, 7.15-20, 7.15-21, 7.15-22
Pn.48	Power off restart level	0430h	appl	np	---	0	n * 4000	0	n * 0,125	rpm	7.15-16, 7.15-19, 7.15-20, 7.15-21, 7.15-22
Pn.49	Power off start input selec-tion	0431h	appl	np	E	0	255	0	1	---	V.4.02
Pn.50	Power off reference DC voltage	0432h	appl	np	---	200	1200	290; 500; 860	1	V	7.15-16, 7.15-19, 7.15-20, 7.15-21
Pn.51	Power off KP DC voltage	0433h	appl	np	---	0	32767	128	1	---	7.15-20, 7.15-22
Pn.52	Power off restart delay	0434h	appl	np	---	0,00	100,00	0,00	0,01	s	7.15-16, 7.15-20, 7.15-21, 7.15-22, 7.15-23
Pn.53	Power off KP active current	0435h	appl	np	---	0	32767	800	1	---	7.15-20
Pn.54	Power off KI active current	0436h	appl	np	---	0	32767	800	1	---	7.15-20
Pn.55	Power off KD active current	0437h	appl	np	---	0	32767	0	1	---	7.15-20, 7.15-21
Pn.56	Power off jump factor	0438h	appl	np	---	0	800	100	1	%	7.15-18
Pn.57	Power off KI DC voltage	0439h	appl	np	---	0	32767	5	1	---	7.15-20, 7.15-22
Pn.58	Quick stop mode	043Ah	appl	np	E	0	31	0	1	---	7.13-13, 7.13-14, 7.13-17, 7.15-22, 7.15-23
Pn.59	Quick stop level	043Bh	appl	np	---	0	200	200	1	%	7.13-14, 7.13-18, 7.13-19

further on next side

Parameter		Addr.	R	P	E	Lower limit	Upper limit	Default	Step	Unit	See on page
Pn.60	Quick stop deceleration time	043Ch	appl	np	---	0	300,00	2,00	0,01	s	7.12-9, 7.13-13, 7.13-14, 7.13-17, 7.15-22, 7.15-23
Pn.61	Quick stop torque limit	043Dh	appl	P	---	0	32000,00	0 Adpt	0,01	Nm	7.5-13, 7.6-5, 7.12-9, 7.13-13, 7.13-18, 7.13-19, 7.15-23
Pn.62	dOH warning level	043Eh	appl	np	---	0	200	100	1	degree	7.13-17
Pn.64	Set GTR7 input selection	0440h	appl	np	E	0	4095	0	1	---	7.3-9, 7.3-10, 7.13-30
Pn.65	Special functions	0441h	appl	np	E	0	16383	0	1	---	7.13-3, 7.13-5, 7.13-17, 7.13-30, 7.13-31, 7.13-32, 7.13-33
Pn.66	Software limit stopping mode	0442h	appl	np	---	0	6	6	1	---	7.12-4, 7.13-6, 7.13-10, 7.13-11, 7.13-17
Pn.67	Qucik stop max. torque corner speed	0443h	appl	P	---	0	32000,00	0 Adpt	0,01	Nm	7.12-9, 7.13-13, 7.13-18, 7.13-20
Pn.68	Max. abnormal stopping time	0444h	appl	np	---	0,00: off	100,00	0,00: off	0,01	s	7.13-15, 7.13-20
Pn.69	GTR7 voltage	0445h	appl	np	---	300	1500	380; 740; 1140	1	V	7.13-30, 7.13-33, 7.15-23
Pn.70	Brake pretorque source	0446h	appl	P	E	0	3	0	1	---	
Pn.71	Pretorque reference setting %	0447h	appl	P	---	-400,0	400,0	100,0	0,1	%	
Pn.72	Set prog. special functions	0448h	appl	P	---	0	1	0	1	---	
Pn.74	Out phase check mode	044Ah	appl	np	---	0	1	0	1	---	
Pn.75	E.SCL stopping mode	044Bh	appl	np	---	0	6	6	1	---	7.13-9, 7.13-10, 7.13-11, 7.13-17
Pn.76	Max. E.UP warning time	044Ch	appl	np	---	0,00: off	32,00	0,00: off	0,01	s	7.13-15
Pn.78	USV operation input selection	044Eh	appl	np	E	0	4095	0	1	---	7.3-11
Pn.79	Acceleration limit 1/s^2	044Fh	appl	np	---	0,01	10737418,23	0,01	0,01	---	7.13-9
Pn.80	Acceleration scan time	0450h	appl	np	---	0	60000	0	1	ms	7.13-9
Pn.81	Warning acceleration stop mode	0451h	appl	np	---	0	6	6	1	---	7.13-9, 7.13-10, 7.13-11, 7.13-17
Pn.82	GTR7 resistance	0452h	appl	np	---	0,000	5000,000	0,000	0,001	Ohm	
PP.00	Prog. parameter 00	3300h	appl	np	---	ud. 30	ud. 29	0	1	---	7.16-12
PP.01	Prog. parameter 01	3301h	appl	np	---	ud. 30	ud. 29	0	1	---	
PP.02	Prog. parameter 02	3302h	appl	np	---	ud. 30	ud. 29	0	1	---	
PP.03	Prog. parameter 03	3303h	appl	np	---	ud. 30	ud. 29	0	1	---	
PP.04	Prog. parameter 04	3304h	appl	np	---	ud. 30	ud. 29	0	1	---	
PP.05	Prog. parameter 05	3305h	appl	np	---	ud. 30	ud. 29	0	1	---	
PP.06	Prog. parameter 06	3306h	appl	np	---	ud. 30	ud. 29	0	1	---	
PP.07	Prog. parameter 07	3307h	appl	np	---	ud. 30	ud. 29	0	1	---	
PP.08	Prog. parameter 08	3308h	appl	np	---	ud. 30	ud. 29	0	1	---	
PP.09	Prog. parameter 09	3309h	appl	np	---	ud. 30	ud. 29	0	1	---	
PP.10	Prog. parameter 10	330Ah	appl	np	---	ud. 30	ud. 29	0	1	---	
PP.11	Prog. parameter 11	330Bh	appl	np	---	ud. 30	ud. 29	0	1	---	
PP.12	Prog. parameter 12	330Ch	appl	np	---	ud. 30	ud. 29	0	1	---	
PP.13	Prog. parameter 13	330Dh	appl	np	---	ud. 30	ud. 29	0	1	---	
PP.14	Prog. parameter 14	330Eh	appl	np	---	ud. 30	ud. 29	0	1	---	
PP.15	Prog. parameter 15	330Fh	appl	np	---	ud. 30	ud. 29	0	1	---	
PP.16	Prog. parameter 16	3310h	appl	np	---	ud. 30	ud. 29	0	1	---	
PP.17	Prog. parameter 17	3311h	appl	np	---	ud. 30	ud. 29	0	1	---	
PP.18	Prog. parameter 18	3312h	appl	np	---	ud. 30	ud. 29	0	1	---	
PP.19	Prog. parameter 19	3313h	appl	np	---	ud. 30	ud. 29	0	1	---	
PP.20	Prog. parameter 20	3314h	appl	np	---	ud. 30	ud. 29	0	1	---	
PP.21	Prog. parameter 21	3315h	appl	np	---	ud. 30	ud. 29	0	1	---	
PP.22	Prog. parameter 22	3316h	appl	np	---	ud. 30	ud. 29	0	1	---	
PP.23	Prog. parameter 23	3317h	appl	np	---	ud. 30	ud. 29	0	1	---	
PP.24	Prog. parameter 24	3318h	appl	np	---	ud. 30	ud. 29	0	1	---	
PP.25	Prog. parameter 25	3319h	appl	np	---	ud. 30	ud. 29	0	1	---	
PP.26	Prog. parameter 26	331Ah	appl	np	---	ud. 30	ud. 29	0	1	---	
PP.27	Prog. parameter 27	331Bh	appl	np	---	ud. 30	ud. 29	0	1	---	
PP.28	Prog. parameter 28	331Ch	appl	np	---	ud. 30	ud. 29	0	1	---	
PP.29	Prog. parameter 29	331Dh	appl	np	---	ud. 30	ud. 29	0	1	---	
PP.30	Prog. parameter 30	331Eh	appl	np	---	ud. 30	ud. 29	0	1	---	
PP.31	Prog. parameter 31	331Fh	appl	np	---	ud. 30	ud. 29	0	1	---	
PP.32	Prog. parameter 32	3320h	appl	np	---	ud. 30	ud. 29	0	1	---	
PP.33	Prog. parameter 33	3321h	appl	np	---	ud. 30	ud. 29	0	1	---	
PP.34	Prog. parameter 34	3322h	appl	np	---	ud. 30	ud. 29	0	1	---	
PP.35	Prog. parameter 35	3323h	appl	np	---	ud. 30	ud. 29	0	1	---	
PP.36	Prog. parameter 36	3324h	appl	np	---	ud. 30	ud. 29	0	1	---	
PP.37	Prog. parameter 37	3325h	appl	np	---	ud. 30	ud. 29	0	1	---	

further on next side

Parameter		Addr.	R	P	E	Lower limit	Upper limit	Default	Step	Unit	See on page
PP.38	Prog. parameter 38	3326h	appl	np	---	ud. 30	ud. 29	0	1	---	
PP.39	Prog. parameter 39	3327h	appl	np	---	ud. 30	ud. 29	0	1	---	
PP.40	Prog. parameter 40	3328h	appl	np	---	ud. 30	ud. 29	0	1	---	
PP.41	Prog. parameter 41	3329h	appl	np	---	ud. 30	ud. 29	0	1	---	
PP.42	Prog. parameter 42	332Ah	appl	np	---	ud. 30	ud. 29	0	1	---	
PP.43	Prog. parameter 43	332Bh	appl	np	---	ud. 30	ud. 29	0	1	---	
PP.44	Prog. parameter 44	332Ch	appl	np	---	ud. 30	ud. 29	0	1	---	
PP.45	Prog. parameter 45	332Dh	appl	np	---	ud. 30	ud. 29	0	1	---	
PP.46	Prog. parameter 46	332Eh	appl	np	---	ud. 30	ud. 29	0	1	---	
PP.47	Prog. parameter 47	332Fh	appl	np	---	ud. 30	ud. 29	0	1	---	
PS.00	Posi / synchronous mode	1300h	appl	P	E	0	8127	0	1	---	7.12-11, 7.12-18, 7.12-19, 7.12-20, 7.12-22, 7.12-24, 7.12-26, 7.12-27, 7.12-28, 7.12-34, 7.12-35, 7.12-36, 7.12-38, 7.12-39, 7.12-40, 7.12-41, 7.12-43, 7.12-45, 7.12-47, 7.12-48, 7.12-49, 7.12-61, 7.12-62, 7.12-63, 7.12-65, 7.12-69, 7.12-70, 7.12-75, 7.12-76, 7.12-78, 7.12-80
PS.01	Actual master source	1301h	appl	P	---	0	2	1	1	---	7.12-17, 7.12-18, 7.12-26, 7.12-29, 7.12-30, 7.12-33, 7.12-34, 7.12-74, 7.12-80
PS.02	Posi / synch input select	1302h	appl	np	E	0	4095	0	1	---	7.3-9, 7.3-10, 7.12-19, 7.12-26, 7.12-27, 7.12-29, 7.12-34, 7.12-80
PS.03	Shifting slave input selection	1303h	appl	np	E	0	4095	0	1	---	7.3-9, 7.3-10, 7.12-25
PS.04	Shifting slave	1304h	appl	np	---	-2^30	2^30-1	0	1	inc	7.12-25
PS.05	Start offset	1305h	appl	P	---	-2^30	2^30-1	0	1	inc	7.12-19, 7.12-20, 7.12-21, 7.12-23, 7.12-24
PS.06	KP pos/syn	1306h	appl	P	---	0	32767	500	1	---	7.12-4, 7.12-14, 7.12-18, 7.12-26, 7.12-29, 7.12-60, 7.12-80, 7.12-81
PS.07	KP speed limit reduction	1307h	appl	P	---	0,0	100,0	100,0	0,1	%	7.12-4, 7.12-81
PS.08	Speed limit for ps.07	1308h	appl	P	---	n * -0,125: off(ru.63)	n * 4000	n * 4000	n * 0,125	rpm	7.12-4, 7.12-14, 7.12-29, 7.12-81
PS.09	Pos/syn position limit	1309h	appl	P	---	0	n * 4000	n * 250	n * 0,125	rpm	7.12-14, 7.12-20, 7.12-22, 7.12-28, 7.12-29, 7.12-32, 7.12-81
PS.10	Shifting slave inversed input selection	130Ah	appl	np	E	0	4095	0	1	---	7.3-9, 7.3-10, 7.12-25
PS.11	Reset m/s difference input selection	130Bh	appl	np	E	0	4095	0	1	---	7.3-11
PS.13	Set reference point input selection	130Dh	appl	np	E	0	4095	0	1	---	7.3-11, 7.12-11
PS.14	Mode of position reference	130Eh	appl	np	E	0	4095	0	1	---	7.12-2, 7.12-5, 7.12-6, 7.12-7, 7.12-8, 7.12-9, 7.12-10, 7.12-11, 7.12-12
PS.14	Mode of position reference	130Eh	appl	np	E	0	1023	0	1	---	7.12-2, 7.12-5, 7.12-6, 7.12-7, 7.12-8, 7.12-9, 7.12-10, 7.12-11, 7.12-12
PS.15	Limit switch left	130Fh	appl	np	---	-2^31	2^31-1	-2^30	1	inc	7.12-4, 7.13-6
PS.16	Limit switch right	1310h	appl	np	---	-2^31	2^31-1	2^30-1	1	inc	7.12-4, 7.13-6
PS.17	Reference point	1311h	appl	np	E	-2^31	2^31-1	0	1	inc	7.3-11, 7.12-7, 7.12-10, 7.12-11, 7.12-12, 7.12-57, 7.12-75
PS.18	Reference switch input selection	1312h	appl	np	E	0	4095	0	1	---	7.3-9, 7.3-10, 7.12-5
PS.19	Start reference input selection	1313h	appl	np	E	0	4095	0	1	---	7.3-9, 7.3-10, 7.12-5, 7.12-6
PS.20	Reference acceleration/deceleration time	1314h	appl	np	---	0,00	300,00	0,50	0,01	s	7.12-6, 7.12-7, 7.12-9, 7.12-10, 7.12-12

further on next side

Parameter		Addr.	R	P	E	Lower limit	Upper limit	Default	Step	Unit	See on page
PS.21	Reference speed	1315h	appl	np	---	n*-4000	n * 4000	n *100	n * 0,125	rpm	7.12-6, 7.12-7, 7.12-10
PS.22	Reference drive free speed	1316h	appl	np	---	0: off	n * 4000	0: off	n * 0,125	rpm	7.12-6, 7.12-7, 7.12-10
PS.23	Index selection	1317h	appl	np	E	0	31	0	1	---	7.12-35, 7.12-38, 7.12-41, 7.12-42, 7.12-43, 7.12-44, 7.12-46, 7.12-50, 7.12-51, 7.12-63, 7.12-65, 7.12-71, 7.12-73
PS.24	Index position	1318h	appl	np	---	-2^31	2^31-1	0	1	inc	7.3-11, 7.12-29, 7.12-35, 7.12-36, 7.12-38, 7.12-39, 7.12-41, 7.12-42, 7.12-43, 7.12-44, 7.12-46, 7.12-49, 7.12-50, 7.12-51, 7.12-53, 7.12-55, 7.12-56, 7.12-57, 7.12-58, 7.12-59, 7.12-63, 7.12-64, 7.12-65, 7.12-70, 7.12-71, 7.12-72, 7.12-73, 7.12-74, 7.12-75, 7.12-78
PS.25	Index speed	1319h	appl	np	E	n*-4000	n * 4000	0	n * 0,125	rpm	7.12-12, 7.12-28, 7.12-29, 7.12-32, 7.12-35, 7.12-36, 7.12-38, 7.12-39, 7.12-40, 7.12-41, 7.12-42, 7.12-43, 7.12-44, 7.12-45, 7.12-46, 7.12-48, 7.12-50, 7.12-51, 7.12-63, 7.12-69
PS.26	Next index	131Ah	appl	np	E	-1: PS.28	31	-1: PS.28	1	---	7.12-35, 7.12-38, 7.12-39, 7.12-41, 7.12-42, 7.12-43, 7.12-44, 7.12-46, 7.12-50, 7.12-51, 7.12-63, 7.12-75
PS.27	Index mode	131Bh	appl	np	E	0	15	0	1	---	7.3-11, 7.12-35, 7.12-38, 7.12-39, 7.12-40, 7.12-41, 7.12-42, 7.12-43, 7.12-44, 7.12-46, 7.12-50, 7.12-51, 7.12-52, 7.12-53, 7.12-57, 7.12-58, 7.12-59, 7.12-63, 7.12-74
PS.28	Start index new profile	131Ch	appl	P	E	0	31	0	1	---	7.12-35, 7.12-39, 7.12-40, 7.12-41, 7.12-43, 7.12-45, 7.12-48, 7.12-51, 7.12-52, 7.12-63, 7.12-64, 7.12-65, 7.12-70, 7.12-73, 7.12-75
PS.29	Start posi input selection	131Dh	appl	np	E	0	4095	0	1	---	7.3-9, 7.3-10, 7.12-29, 7.12-43, 7.12-45, 7.12-48, 7.12-49, 7.12-64
PS.30	Target window	131Eh	appl	np	E	0	65535	1024	1	inc	7.12-48, 7.12-72, 7.12-75
PS.31	Max. speed setting %	131Fh	appl	np	---	0,0	100,0	100,0	0,1	%	7.12-28, 7.12-35, 7.12-36, 7.12-38, 7.12-39, 7.12-40, 7.12-45, 7.12-46, 7.12-47, 7.12-63, 7.15-28
PS.32	Limit acceleration/deceleration reducing %	1320h	appl	np	---	25,0	100,0	100,0	0,1	%	7.12-66, 7.12-67, 7.12-68, 7.12-74
PS.33	Source contouring mode position	1321h	appl	np	E	0	7	0	1	---	7.12-78
PS.34	Contouring mode position	1322h	appl	np	E	-2^31	2^31-1	0	1	inc	7.12-78, 7.12-79, 7.12-80
PS.35	Teach mode	1323h	appl	np	---	0	4	0	1	---	7.12-73, 7.12-74
PS.36	Teach input selection	1324h	appl	np	E	0	4095	0	1	---	7.3-9, 7.3-11
PS.37	Position scan index input selection	1325h	appl	np	E	0	4095	0	1	---	7.3-9, 7.3-11, 7.12-72, 7.12-73

further on next side

Parameter		Addr.	R	P	E	Lower limit	Upper limit	Default	Step	Unit	See on page
PS.38	Relative position f/r input selection	1326h	appl	np	E	0	4095	0	1	---	7.3-9, 7.3-11, 7.12-35, 7.12-39
PS.39	Position range	1327h	appl	np	E	0	2^30-1	0	1	inc	7.12-52, 7.12-53, 7.12-54, 7.12-55, 7.12-56
PS.40	Reference point window	1328h	appl	np	---	0	2^30-1	0	1	inc	7.12-57, 7.12-63, 7.12-64, 7.12-75
PS.41	Reference position 0%	1329h	appl	np	---	-2^30	2^30-1	0	1	inc	7.2-13, 7.12-71
PS.42	Reference position 100%	132Ah	appl	np	---	-2^30	2^30-1	-2^30	1	inc	7.2-13, 7.12-71
PS.43	Correction reference point input selection	132Bh	appl	np	E	0	4095	0	1	---	7.3-9, 7.3-11
PS.44	Limit acceleration/decelerati-on correction %	132Ch	appl	np	---	25,0	100,0	100,0	0,1	%	7.12-60, 7.12-61, 7.12-62, 7.12-67
PS.45	Index selection correction	132Dh	appl	np	E	0	31	0	1	---	7.12-65
PS.46	Relative correction switch forward	132Eh	appl	np	E	0	2^30-1	0	1	inc	7.12-38, 7.12-59, 7.12-60, 7.12-63, 7.12-64
PS.47	Relative correction switch reverse	132Fh	appl	np	E	0	2^30-1	0	1	inc	7.12-38, 7.12-59, 7.12-60, 7.12-63, 7.12-64
PS.52	Automatically execution positioning after STOP	1334h	appl	np	---	0: off	1: on	0: off	1	---	7.12-70
PS.53	Distance for no abort	1335h	appl	P	---	0	2^30-1	0	1	inc	7.12-68
PS.55	Play of gear	1337h	appl	P	E	-2^31	2^31-1	-2^30	1	inc	
PS.56	Position target source	1338h	appl	np	E	0	5	0	1	---	
PS.57	Positon target input selection	1339h	appl	np	E	0	4095	0	1	---	
PS.58	Teach index selection	133Ah	appl	np	E	0	31	0	1	---	
PS.59	Teach index position	133Bh	appl	np	---	-2^31	2^31-1	0	1	inc	
rG.00	Register mode	1700h	appl	P	E	0	255	0	1	---	7.15-23
rG.01	Register max. gear change per pulse	1701h	appl	np	E	0,0	100,0	1,0	0,1	%	7.15-25
rG.02	Register max. angle change per pulse	1702h	appl	np	E	0	2^30-1	0	1	inc	7.15-25
rG.03	Register difference time angle correction	1703h	appl	P	E	0,000	(2^31-1)/8	5,000	0,125	ms	7.15-25
rG.04	Register master input se-lection	1704h	appl	np	E	0	4095	0	1	---	7.15-25
rG.05	Register slave input selection	1705h	appl	np	E	0	4095	0	1	---	7.15-25
rG.06	Register ratio master	1706h	appl	np	E	0	15	1	1	---	7.15-25
rG.07	Register ration slave	1707h	appl	np	E	0	15	1	1	---	7.15-25
rG.08	Register angle level 1	1708h	appl	np	E	-2^30	2^30-1	0	1	inc	7.15-25
rG.09	Min. speed for level 1	1709h	appl	np	---	n*-4000	n * 4000	0	n * 0,125	rpm	7.15-25
rG.10	Register angle level 2	170Ah	appl	np	E	-2^30	2^30-1	0	1	inc	7.15-25
rG.11	Min. speed for level 2	170Bh	appl	np	---	n*-4000	n * 4000	0	n * 0,125	rpm	7.15-25
rG.14	Register distance master	170Eh	RO	np	---	-2^31	2^31-1	0	1	inc	
rG.15	Register distance slave	170Fh	RO	np	---	-2^31	2^31-1	0	1	inc	
rG.16	Register difference distance m/s	1710h	RO	np	---	-2^31	2^31-1	0	1	inc	
rG.17	Register time master	1711h	RO	np	---	0,000	12500	0,000	0,125	ms	
rG.18	Register time slave	1712h	RO	np	---	0,000	(2^31-1)/8	0,000	0,125	ms	
rG.19	Register difference time m/s	1713h	RO	np	---	-2^31/8	(2^31-1)/8	0,000	0,125	ms	
ru.00	Inverter state	0200h	RO	np	---	0	255	0	1	---	7.1-6, 7.5-17, 7.5-18, 7.6-6, 7.6-8, 7.6-9
ru.01	Set value display	0201h	RO	np	---	n*-4000	n * 4000	0	n * 0,125	rpm	7.1-6, 7.4-3, 7.5-22, 7.15-4
ru.02	Ramp output display	0202h	RO	np	---	n*-4000	n * 4000	0	n * 0,125	rpm	7.1-6, 7.4-3, 7.9-4, 7.15-4
ru.03	Actual frequency display	0203h	RO	np	---	n*-400	n * 400	0	n * 0,0125	Hz	7.1-6, 7.4-3, 7.15-4, 7.15-5
ru.06	Calculated actual value	0206h	RO	np	---	n*-4000	n * 4000	0	n * 0,125	rpm	5.1-4
ru.07	Actual value display	0207h	RO	np	---	n*-4000	n * 4000	0	n * 0,125	rpm	7.1-7, 7.4-14, 7.4-19, 7.6-15, 7.6-17, 7.15-5
ru.09	Encoder 1 speed	0209h	RO	np	---	n*-4000	n * 4000	0	n * 0,125	rpm	7.1-7, 7.6-6
ru.10	Encoder 2 speed	020Ah	RO	np	---	n*-4000	n * 4000	0	n * 0,125	rpm	7.1-7, 7.6-6

further on next side

Parameter		Addr.	R	P	E	Lower limit	Upper limit	Default	Step	Unit	See on page
ru.11	Set torque display	020Bh	RO	np	---	-32000,00	32000,00	0	0,01	Nm	7.1-7
ru.12	Actual torque display	020Ch	RO	np	---	-32000,00	32000,00	0	0,01	Nm	7.1-7,7.5-21,7.5-22, 7.5-26, 7.6-9, 7.6-11, 7.6-17
ru.13	Actual utilization	020Dh	RO	np	---	0	65535	0	1	%	7.1-8
ru.14	Peak utilization	020Eh	appl	np	---	0	65535	0	1	%	7.1-8
ru.15	Apparent current	020Fh	RO	np	---	0	6553,5	0	0,1	A	7.1-8
ru.16	Peak apparent current	0210h	appl	np	---	0	6553,5	0	0,1	A	7.1-8
ru.17	Active current	0211h	RO	np	---	-3276,7	3276,7	0	0,1	A	7.1-9, 7.6-17
ru.18	Actual DC voltage	0212h	RO	np	---	0	1500	0	1	V	7.1-9
ru.19	Peak DC voltage	0213h	appl	np	---	0	1500	0	1	V	7.1-9
ru.20	Output voltage	0214h	RO	np	---	0	1167	0	1	V	7.1-9
ru.21	Input terminal state	0215h	RO	np	---	0	4095	0	1	---	7.1-10
ru.22	Internal input state	0216h	RO	np	---	0	4095	0	1	---	7.1-10
ru.23	Output condition state	0217h	RO	np	---	0	255	0	1	---	7.1-11
ru.24	State of output flags 0-7	0218h	RO	np	---	0	255	0	1	---	7.1-11
ru.25	Output terminal state	0219h	RO	np	---	0	255	0	1	---	7.1-12, 7.3-23
ru.26	Active parameter set	021Ah	RO	np	---	0	7	0	1	---	7.1-12, 7.15-9
ru.27	AN1 pre amplifier display	021Bh	RO	np	---	-100,0	100,0	0	0,1	%	7.1-12, 7.2-3
ru.28	AN1 post amplifier display	021Ch	RO	np	---	-400,0	400,0	0	0,1	%	7.1-12, 7.2-3
ru.29	AN2 pre amplifier display	021Dh	RO	np	---	-100,0	100,0	0	0,1	%	7.1-13, 7.2-3
ru.30	AN2 post amplifier display	021Eh	RO	np	---	-400,0	400,0	0	0,1	%	7.1-13, 7.2-3
ru.31	AN3 pre amplifier display	021Fh	RO	np	---	-100,0	100,0	0	0,1	%	7.1-13, 7.2-3
ru.32	AN3 post amplifier display	0220h	RO	np	---	-400,0	400,0	0	0,1	%	7.1-13, 7.2-3
ru.33	ANOUT1 pre amplifier display	0221h	RO	np	---	-400,0	400,0	0	0,1	%	7.1-14
ru.34	ANOUT1 post amplifier display	0222h	RO	np	---	-115,0	115,0	0	0,1	%	7.1-14
ru.35	ANOUT2 pre amplifier display	0223h	RO	np	---	-400,0	400,0	0	0,1	%	7.1-14
ru.36	ANOUT2 post amplifier display	0224h	RO	np	---	-115,0	115,0	0	0,1	%	7.1-14
ru.37	Motorpoti actual value	0225h	RO	np	---	-100,00	100,00	0	0,01	%	7.1-14, 7.4-4, 7.9-3, 7.15-7, 7.15-9
ru.38	Power module temperature	0226h	RO	np	---	0	150	0	1	degree	7.1-15
ru.39	OL counter display	0227h	RO	np	---	0	100	0	1	%	7.1-15
ru.40	Power on counter	0228h	sup	np	---	0	65535	0	1	h	7.1-15
ru.41	Modulation on counter	0229h	sup	np	---	0	ru.40	0	1	h	7.1-15
ru.42	Modulation grade	022Ah	RO	np	---	0	110	0	1	%	7.1-15, 7.5-16, 7.5-24
ru.43	Timer 1 display	022Bh	appl	np	---	0	655,35	0	0,01	---	7.1-15, 7.15-10, 7.15-12
ru.44	Timer 2 display	022Ch	appl	np	---	0	655,35	0	0,01	---	7.1-16, 7.15-10, 7.15-12
ru.45	Act. switching frequency	022Dh	RO	np	---	0	4	0	1	---	7.1-16
ru.46	Motor temperature	022Eh	RO	np	---	0	255	0	1	degree	7.1-16
ru.47	Actual torque limit motor	022Fh	RO	np	---	-32000,00	32000,00	0	0,01	Nm	7.1-16
ru.48	Actual torque limit generator	0230h	RO	np	---	-32000,00	32000,00	0	0,01	Nm	7.1-16
ru.49	Actual reference torque	0231h	RO	np	---	-32000,00	32000,00	0	0,01	Nm	7.1-17
ru.52	Ext. PID out dislay	0234h	RO	np	---	-400,0	400,0	0	0,1	%	7.1-17, 7.4-4
ru.53	AUX display	0235h	RO	np	---	-400,0	400,0	0	0,1	%	7.1-17
ru.54	Actual position	0236h	RO	np	---	-2^31	2^31-1	0	1	inc	7.1-17
ru.56	Set position	0238h	RO	np	---	-2^31	2^31-1	0	1	inc	7.1-17
ru.58	Angle difference	023Ah	RO	np	---	-2^31	2^31-1	0	1	inc	7.1-18, 7.1-19
ru.59	Rotor adaption factor	023Bh	RO	np	---	0	200	0	1	%	7.1-18, 7.1-19, 7.1-20, 7.1-21, 7.1-22, 7.5-4
ru.60	Actual position index	023Ch	RO	np	---	0	255	0	1	---	7.1-18
ru.61	Target position	023Dh	RO	np	---	-2^31	2^31-1	0	1	inc	7.1-18
ru.63	Profile speed	023Fh	RO	np	---	n*-4000	n * 4000	0	n * 0,125	rpm	7.1-18, 7.4-4
ru.68	Rated DC voltage	0244h	RO	np	---	0	1500	0	1	V	7.1-18, 7.15-17, 7.15-19, 7.15-23
ru.69	Distance reference zero point	0245h	RO	np	---	-2^31	2^31-1	0	1	inc	7.1-18
ru.71	Teach/scan position	0247h	RO	np	---	-2^31	2^31-1	0	1	inc	7.1-19
ru.73	Set torque in percent	0249h	RO	np	---	-400,0	400,0	0	0,1	%	7.1-19
ru.74	Actual torque in percent	024Ah	RO	np	---	-400,0	400,0	0	0,1	%	7.1-19
ru.78	Actual value display in percent	024Eh	RO	np	---	-400,0	400,0	0	0,1	%	7.1-19
ru.79	Absolute speed value (EMC)	024Fh	RO	np	---	n*-4000	n * 4000	0	n * 0,125	rpm	7.1-19, 7.4-14, 7.4-19, 7.6-4, 7.6-21
ru.80	Digital output state	0250h	RO	np	---	0	255	0	1	---	7.1-20, 7.3-23
ru.81	Active power	0251h	RO	np	---	-1000,00	1000,00	0,00	0,01	kW	7.1-20
ru.82	Ramp value display high-resolution	0252h	RO	np	---	-2^31	2^31-1	0	1	---	7.1-20, 7.1-21, 7.4-7

further on next side

Parameter		Addr.	R	P	E	Lower limit	Upper limit	Default	Step	Unit	See on page
ru.83	Actual value display high-resolution	0253h	RO	np	---	-2^31	2^31-1	0	1	---	7.1-21
ru.84	Accessible relative position	0254h	RO	np	---	-2^31	2^31-1	0	1	inc	7.1-21
ru.85	Peak encoder 1 speed	0255h	appl	np	---	0	n*4095,875	0	n * 0,125	rpm	7.1-21
ru.86	Peak encoder 2 speed	0256h	appl	np	---	0	n*4095,875	0	n * 0,125	rpm	7.1-21
ru.87	Magnetizing current	0257h	RO	np	---	-3276,7	3276,7	0	0,1	A	7.1-22
ru.89	Actual source speed	0259h	RO	np	---	n*-4000	n * 4000	0	n * 0,125	rpm	7.1-22
ru.90	Max. torque in percent	025Ah	RO	np	---	0,00	400,00	0	0,01	%	7.1-22
ru.91	Energy over gtr 7	025Bh	appl	np	---	0	99999	0	1	KWh	
ru.92	Input power	025Ch	RO	np	---	-1000,00	1000,00	0,00	0,01	kW	
ru.93	Power loss	025Dh	RO	np	---	-1000,00	1000,00	0,00	0,01	kW	
Sy.02	Inverter identifier	0002h	cp-ro	np	---	identifier	identifier	identifier	1	hex	7.1-27
Sy.03	Power unit code	0003h	cp-ro	np	E	1	255	LTK	1	---	7.1-27
Sy.04	Configuration data selection	0004h	cp-ro	np	---	0	24	0	1	---	
Sy.05	Configuration data	0005h	RO	np	---	-32727	32767	0	1	---	
Sy.06	Inverter address	0006h	appl	np	E	0	239	1	1	---	7.1-27
Sy.07	Baud rate ext. bus	0007h	appl	np	E	0	6	3	1	---	7.1-27
Sy.08	Bus synchronous time	0008h	cp-ro	np	---	0: off	65000	0: off	1	µs	7.1-28
Sy.09	HSP5 watchdog time	0009h	cp-ro	np	E	0,00: off	10,00	0,00: off	0,01	s	7.1-28, 7.12-80
Sy.10	F5-B; F5-G; F5-M	000Ah	RO	np	---	0	0	0	1	---	
Sy.11	Baud rate int. bus	000Bh	cp-ro	np	E	3	11	5	1	---	7.1-28
Sy.12	Message parameter 1 definition	000Ch	cp-ro	np	---	-1: off	7FFFH	-1: off	1	hex	
Sy.13	Message parameter 1 set	000Dh	cp-ro	np	---	1	128	1	1	---	
Sy.14	Message parameter 2 definition	000Eh	cp-ro	np	E	-1: off	7FFFH	-1: off	1	hex	
Sy.15	Message parameter 2 set	000Fh	cp-ro	np	E	1	128	1	1	---	
Sy.16	Proc. read data 1 definition	0010h	appl	np	E	-1: off	7FFFH	-1: off	1	hex	7.12-80
Sy.17	Proc. read data 1 set	0011h	appl	np	E	1	128	1	1	---	7.12-80
Sy.18	Proc. read data 2 definition	0012h	appl	np	E	-1: off	7FFFH	-1: off	1	hex	7.12-80
Sy.19	Proc. read data 2 set	0013h	appl	np	E	1	128	1	1	---	7.12-80
Sy.20	Proc. read data 3 definition	0014h	appl	np	E	-1: off	7FFFH	-1: off	1	hex	7.12-80
Sy.21	Proc. read data 3 set	0015h	appl	np	E	1	128	1	1	---	7.12-80
Sy.22	Proc. read data 4 definition	0016h	appl	np	E	-1: off	7FFFH	-1: off	1	hex	
Sy.23	Proc. read data 4 set	0017h	appl	np	E	1	128	1	1	---	
Sy.24	Proc. write data 1 definition	0018h	appl	np	E	-1: off	7FFFH	-1: off	1	hex	7.12-80
Sy.25	Proc. write data 1 set	0019h	appl	np	E	1	255	255	1	---	7.12-80
Sy.26	Proc. write data 2 definition	001Ah	appl	np	E	-1: off	7FFFH	-1: off	1	hex	7.12-80
Sy.27	Proc. write data 2 set	001Bh	appl	np	E	1	255	255	1	---	7.12-80
Sy.28	Proc. write data 3 definition	001Ch	appl	np	E	-1: off	7FFFH	-1: off	1	hex	7.12-80
Sy.29	Proc. write data 3 set	001Dh	appl	np	E	1	255	255	1	---	7.12-81
Sy.30	Proc. write data 4 definition	001Eh	appl	np	E	-1: off	7FFFH	-1: off	1	hex	
Sy.31	Proc. write data 4 set	001Fh	appl	np	E	1	255	255	1	---	
Sy.32	Scope timer	0020h	RO	np	---	0	65535	Sy.32	1	---	7.1-28
Sy.33	Scope data 1 definition	0021h	cp-ro	np	---	-1: off	7FFFH	-1: off	1	hex	
Sy.34	Scope data 1 set	0022h	cp-ro	np	---	1	128	1	1	---	7.16-12
Sy.35	Scope data 2 definition	0023h	cp-ro	np	---	-1: off	7FFFH	-1: off	1	hex	
Sy.36	Scope data 2 set	0024h	cp-ro	np	---	1	128	1	1	---	
Sy.37	Scope data 3 definition	0025h	cp-ro	np	---	-1: off	7FFFH	-1: off	1	hex	
Sy.38	Scope data 3 set	0026h	cp-ro	np	---	1	128	1	1	---	
Sy.39	Scope data 4 definition	0027h	cp-ro	np	---	-1: off	7FFFH	-1: off	1	hex	
Sy.40	Scope data 4 set	0028h	cp-ro	np	---	1	128	1	1	---	
SY.41	Control word (high)	0029h	appl	np	E	0	65535	0	1	hex	7.1-28, 7.1-29
SY.42	Status word (high)	002Ah	RO	np	---	0	65535	0	1	hex	7.1-29
SY.43	Control word (long)	002Bh	appl	np	E	-2^31	2^311	0	1	hex	7.1-28, 7.1-29, 7.3-11, 7.3-12, 7.13-15, 7.13-20
SY.44	Status word (long)	002Ch	RO	np	---	-2^31	2^311	0	1	hex	7.1-29, 7.13-16
Sy.45	Drive mode reference value	002Dh	appl	np	---	0	n*4095	n*1500	n * 0,125	rpm	
Sy.46	Drive mode rotation	002Eh	appl	np	---	0	15	0	1	hex	
SY.50	Control word (low)	0032h	appl	np	E	0	65535	0	1	hex	7.1-28, 7.1-29, 7.3-11, 7.3-12, 7.4-7, 7.4-11, 7.4-12, 7.12-80, 7.13-15, 7.13-20, 7.14-8
Sy. 51	Status word (low)	0033h	RO	np	---	0	65535	0	1	hex	7.1-29, 7.12-80, 7.13-16, 7.13-33

further on next side

Parameter		Addr.	R	P	E	Lower limit	Upper limit	Default	Step	Unit	See on page
SY.52	Set speed value	0034h	appl	np	---	-32000; -64000; -128000	32000; 64000; 128000	0	1; 2; 4	rpm	7.1-30, 7.4-4
SY.53	Actual speed value	0035h	RO	np	---	-32000; -64000; -128000	32000; 64000; 128000	0	1; 2; 4	rpm	7.1-30
Sy.54	Message time stamps	0036h	cp-ro	np	---	0	255	0	1	hex	
Sy.56	Start display address	0038h	cp-ro	np	E	0	7FFFH	0209h	1	hex	7.1-30
Sy.57	Watchdog time address	0039h	cp-ro	np	---	-2	-1	-2	1	hex	
Sy.58	Proc. read data 5 definition	003Ah	appl	np	E	-1	7FFFH	-1	1	hex	
Sy.59	Proc. read data 5 set	003Bh	appl	np	E	1	128	1	1	---	
Sy.60	Proc. read data 6 definition	003Ch	appl	np	E	-1	7FFFH	-1	1	hex	
Sy.61	Proc. read data 6 set	003Dh	appl	np	E	1	128	1	1	---	
Sy.62	Proc. read data 7 definition	003Eh	appl	np	E	-1	7FFFH	-1	1	hex	
Sy.63	Proc. read data 7 set	003Fh	appl	np	E	1	128	1	1	---	
Sy.64	Proc. read data 8 definition	0040h	appl	np	E	-1	7FFFH	-1	1	hex	
Sy.65	Proc. read data 8 set	0041h	appl	np	E	1	128	1	1	---	
Sy.66	Proc. write data 5 definition	0042h	appl	np	E	-1	7FFFH	-1	1	hex	
Sy.67	Proc. write data 5 set	0043h	appl	np	E	1	255	255	1	---	
Sy.68	Proc. write data 6 definition	0044h	appl	np	E	-1	7FFFH	-1	1	hex	
Sy.69	Proc. write data 6 set	0045h	appl	np	E	1	255	255	1	---	
Sy.70	Proc. write data 7 definition	0046h	appl	np	E	-1	7FFFH	-1	1	hex	
Sy.71	Proc. write data 7 set	0047h	appl	np	E	1	255	255	1	---	
Sy.72	Proc. write data 8 definition	0048h	appl	np	E	-1	7FFFH	-1	1	hex	
Sy.73	Proc. write data 8 set	0049h	appl	np	E	1	255	255	1	---	
Sy.74	Proc. data 1-4 size	004Ah	appl	np	E	0	65535	0	1	hex	
Sy.75	Proc. data 5-8 size	004Bh	appl	np	E	0	65535	0	1	hex	
ud. 01	Password	0801h	cp-ro	np	o.P.	0	9999	Application	1	---	4.2-3, 7.16-13
Ud.02	Control type	0802h	appl	np	E	0	15	0	1	---	5.1-3, 7.4-4, 7.4-5, 7.4-6, 7.4-16, 7.6-3, 7.12-81, 7.13-26, 7.14-6, 7.14-7, 7.16-13
Ud.02	Control type	0802h	appl	np	E	0	15	8	1	---	5.1-3, 7.4-4, 7.4-5, 7.4-6, 7.4-16, 7.6-3, 7.12-81, 7.13-26, 7.14-6, 7.14-7, 7.16-13
ud. 04	Auto store state	0804h	appl	np	---	0: off	1: on	1: on	1	---	7.16-13
ud. 05	Auto store	0805h	appl	np	---	0: off	2	1: on	1	---	7.16-13
ud. 09	Drive-mode-control	0809h	appl	np	---	0	11	0	1	---	7.14-6, 7.16-13
ud.15	CP selector	080Fh	appl	np	E	1	36	1	1	---	7.14-6, 7.16-3, 7.16-4, 7.16-6, 7.16-9, 7.16-13
ud.16	CP address	0810h	appl	np	E	-1: off	7FFFH	CP def.	1	hex	7.14-6, 7.16-3, 7.16-4, 7.16-6, 7.16-9, 7.16-13
ud.17	CP set norm	0811h	appl	np	E	1	8191	1	1	---	7.14-6, 7.16-3, 7.16-4, 7.16-6, 7.16-9, 7.16-13
ud.18	Divisor display norm	0812h	appl	P	E	-32767	32767	1	1	---	7.14-6, 7.16-5, 7.16-6, 7.16-7, 7.16-8, 7.16-9, 7.16-13
ud.19	Multiplier display norm	0813h	appl	P	E	-32767	32767	1	1	---	7.16-7, 7.16-8, 7.16-9, 7.16-13
ud.20	Offset display norm	0814h	appl	P	E	-32767	32767	0	1	---	7.16-7, 7.16-8, 7.16-9, 7.16-13
ud.21	Control display norm	0815h	appl	P	E	0	1791	0	1	---	7.16-6, 7.16-7, 7.16-8, 7.16-9, 7.16-13
ud. 22	PP selector	0816h	appl	np	E	0	47	0	1	---	7.16-13
ud. 23	PP address	0817h	appl	np	E	-1: off	7FFFH	-1: off	1	hex	7.16-12, 7.16-13
ud. 24	PP properties	0818h	appl	np	E	1	2^20-1	1	1	---	7.16-4, 7.16-12, 7.16-13
ud. 25	PP write multiplier	0819h	appl	np	---	-32767	32767	1	1	---	7.16-13
ud. 26	PP write shifter	081Ah	appl	np	---	0	48	0	1	---	7.16-13
ud. 27	PP read multiplier	081Bh	appl	np	---	-32767	32767	1	1	---	7.16-13
ud. 28	PP read shifter	081Ch	appl	np	---	0	48	0	1	---	7.16-13
ud. 29	PP offset	081Dh	appl	np	---	-2^31+1	2^31-1	0	1	---	7.16-13
ud. 30	PP upper limit	081Eh	appl	np	---	-2^31+1	2^31-1	1	1	---	7.16-13
ud. 31	PP lower limit	081Fh	appl	np	---	-2^31+1	2^31-1	0	1	---	7.16-13
uf.00	Rated frequency	0500h	appl	P	---	0	n * 400	n * 50 ; 60	n * 0,0125	Hz	7.5-4, 7.5-6, 7.5-9

further on next side

Parameter		Addr.	R	P	E	Lower limit	Upper limit	Default	Step	Unit	See on page
uf.01	Boost	0501h	appl	P	---	0,0	25,5	LTK	0,1	%	7.5-4, 7.5-9, 7.15-28
uf.02	Additional frequency	0502h	appl	P	---	n * -0,0125: parab.	n * 400	0: linear	n * 0,0125	Hz	7.5-5, 7.5-9
uf.03	Additional voltage	0503h	appl	P	---	0,0	100,0	0,0	0,1	%	7.5-5, 7.5-9
uf.04	Delta boost	0504h	appl	P	---	0,0	25,5	0,0	0,1	%	7.5-4
uf.05	Delta boost time	0505h	appl	P	---	0,00	10,00	0,00	0,01	s	7.5-4
uf.06	Energy saving mode	0506h	appl	P	---	0	79	0	1	---	7.5-7, 7.5-11
uf.06	Energy saving mode	0506h	appl	P	---	0	127	0	1	---	7.5-7, 7.5-11
uf.07	Energy saving factor	0507h	appl	P	---	0,0	130,0	70,0	0,1	%	7.5-7, 7.15-6
uf.08	Energy saving input selection	0508h	appl	np	E	0	4095	0	1	---	7.3-9, 7.3-10, 7.5-7, 7.5-11
uf.09	Voltage stabilization	0509h	appl	np	E	1	1120: off	1120: off	1	V	7.5-5, 7.5-6, 7.5-9, 7.5-12, 7.5-13, 7.5-14, 7.6-5
uf.09	Voltage stabilization	0509h	appl	P	E	1	1120: off	1120: off	1	V	7.5-5, 7.5-6, 7.5-9, 7.5-12, 7.5-13, 7.5-14, 7.6-5
uF.10	Max. voltage mode	050Ah	appl	P	---	0	3	0	1	---	7.5-4, 7.5-5
uf.11	Carrier frequency	050Bh	appl	P	E	1	LTK	LTK	1	---	7.10-5, 7.10-6, 7.14-7
uf.11	Carrier frequency	050Bh	appl	P	E	0	LTK	LTK	1	---	7.10-5, 7.10-6, 7.14-7
uF.12	Base block time	050Ch	RO	np	---	0,05	10,00	LTK	0,01	s	7.13-16, 7.13-17
uF.13	Base block voltage level	050Dh	RO	np	---	1	50	LTK	1	%	7.13-16, 7.13-17
uf.14	Transistor on delay time	050Eh	RO	np	---	0	LTK	LTK	0,05	µs	
uF.15	Hardware current limit mode	050Fh	appl	np	E	0	2	1	1	---	7.8-4, 7.8-7, 7.10-4, 7.13-4
uF.16	Autoboost configuration	0510h	appl	P	---	0	3	0	1	---	7.5-9, 7.5-11
uF.17	Autoboost gain	0511h	appl	P	---	0,00	2,50	1,20	0,01	---	7.5-9, 7.5-11
uF.18	Deadtime compensation mode	0512h	appl	np	E	0	3	0	1	---	7.5-21, 7.5-23, 7.6-11, 7.6-12, 7.6-21
uF.18	Deadtime compensation mode	0512h	appl	np	E	0	3	2	1	---	7.5-21, 7.5-23, 7.6-11, 7.6-12, 7.6-21
uF.18	Deadtime compensation mode	0512h	appl	np	E	0	3	1	1	---	7.5-21, 7.5-23, 7.6-11, 7.6-12, 7.6-21
uf.21	Dead time compensation off input selection	0515h	appl	np	E	0	4095	0	1	---	7.3-9, 7.3-11, 7.5-24, 7.6-12
uf.22	Dead time e-compensation limit	0516h	sup	np	---	0,00	10,00	0,00	0,01	µs	
uf.23	Dead time e-compensation factor	0517h	sup	np	---	0	32000	0	1	---	
uf.24	Dead time PT1 time	0518h	appl	np	---	0,000	4095,938	0,000	0,063	ms	
uf.25	Dead time software on/off	0519h	appl	np	---	0: off	1024	0: off	1,000	ms	

1. Introduction
2. Summary
3. Hardware
4. Operation
5. Selection of Operating Mode
6. Start-up
7. Functions
8. Error Assistance
9. Project Design
10. Networks
11. Parameter Overview
12. Annex

12.1 Search and find

12.1.1 Keyword index ..... 12.1 - 3
12.1.2 KEB contact data ..... 12.1 - 11

12. Annex

12.1 Search and find

12.1.1 Keyword index

Symbole

A

Absolute
  Setpoint setting 7.4-15
Acceleration
  time 7.4-16
Acknowledgement of status signals .. 4.1-5
Active current.....7.1-9
Actual frequency
  display.....7.1-6
Actual speed.....7.1-6
  display.....7.1-7
  Value 7.1-30
Actual torque 7.1-7
Actual utilization.....7.1-8
Additional function 7.15-18
  acceleration/deceleration ...7.15-19
  Digital Settings 7.15-19
  mode 7.15-18
  source 7.15-18
Address 7.1-27
An.00 3.1-3,7.2-3,7.2-4
An.01 7.2-3,7.2-5
An.02 7.2-3,7.2-5,7.2-6
An.03 7.2-3,7.2-6
An.04 7.2-3,7.2-7
An.05 7.2-3,7.2-8,7.4-5
An.06 7.2-3,7.2-8,7.2-9,7.4-5
An.07 7.2-3,7.2-8
An.08 7.2-3,7.2-10
An.09 7.2-3,7.2-10
An.10 3.1-3,7.2-3,7.2-4
An.11 7.2-3,7.2-5,7.9-3
An.12 7.2-3,7.2-5,7.9-3
An.13 7.2-3,7.2-6,7.3-9,7.3-10
An.14 7.2-3,7.2-7
An.15 7.2-3,7.2-8,7.15-16
An.16 7.2-3,7.2-8,7.15-16
An.17 7.2-3,7.2-8,7.9-3,7.15-16
An.18 7.2-3,7.2-10,7.15-16
An.19 7.2-3,7.2-10,7.15-16
An.20 7.2-3,7.2-5
An.21 7.2-3,7.2-5
An.22 7.2-3,7.2-5
An.23 7.2-3,7.2-6,7.3-9,7.3-10
An.24 7.2-3,7.2-7
An.25 7.2-3,7.2-8
An.26 7.2-3,7.2-8
An.27 7.2-3,7.2-8
An.28 7.2-3,7.2-10
An.29 7.2-3,7.2-10,7.2-11
An.30 7.2-3,7.2-11,7.4-4,7.9-3,7.12-44,7.12-45
An.31 3.1-3,7.2-12,7.2-14,7.12-70
An.32 7.2-12,7.2-14,7.2-16,7.15-22
An.33 7.2-12,7.2-15,7.2-16
An.34 7.2-15,7.2-16
An.35 7.2-15
An.36 7.2-14,7.12-70
An.37 7.2-16
An.38 7.2-12,7.2-15
An.39 7.2-15
An.40 7.2-15
An.41 7.2-12,7.2-14
An.42 7.2-16
An.43 7.2-15
An.44 7.2-15
An.45 7.2-15
An.46 7.2-12,7.2-13,7.2-16
An.47 7.2-14
An.48 7.2-16
An.49 7.2-15
An.50 7.2-15
An.51 7.2-15
An.52 7.2-13
An.53 7.11-16,7.12-23,7.12-35,7.12-44,7.12-45,7.12-70,7.15-21,7.15-22
An.54 7.11-16,7.11-17,7.12-35,7.12-44,7.12-45,7.12-70,7.15-22
An.55 7.11-16,7.11-17,7.12-44,7.12-70,7.15-22
An.56 7.11-16,7.11-17,7.12-44,7.12-45,7.12-70,7.15-22
An.57 7.15-3,7.15-22
Analog
  mass 3.1-3
Analog input
  display.....7.1-12
Angle difference.....7.1-18
Angular reset 7.12-25
ANOUT.....7.2-14
Apparent current.....7.1-8
  Peak value 7.1-8
Automatic.....3.1-3
Automatic restart 7.13-15
AUX 7.4-3
  display.....7.1-17
  Function 7.4-3
Averaging 7.2-5

B

Baud rate
  ext. Bus 7.1-27
  int. Bus 7.1-28
Binary-coded set selection 7.14-9
Braking
  option 9.1-4
  resistance.....9.1-4
  time 9.1-4
  torque.....9.1-4
Braking transistor.....2.1-5

C

CAN-Bus.....10.1-3
CanOpen operator.....10.1-7
cdf 9.1-4
cn.11 7.3-9,7.3-10
cn.12 7.3-9,7.3-10
cn.13 7.3-9,7.3-10
COMBIVIS.....7.1-27
communication 7.1-27
Communication faults.....7.1-27
Control
  enable 3.1-3,7.3-3
Converter.....2.1-3
Copying
  of parameter sets 7.14-4,7.14-5
Counter
  Reset condition 7.15-11,7.15-12
CP-Parameter
  assignment.....7.16-4
  define 7.16-3
cs.00 7.5-10,7.5-11,7.5-12,7.5-23,7.6-4,7.6-8,7.9-4,7.9-5,7.13-24,7.15-3
cs.01 7.5-10,7.5-14,7.5-23,7.6-4,7.6-8,7.12-29,7.12-30,7.12-32,7.12-33,7.13-31,7.15-3
cs.03 7.5-10,7.5-11
cs.04 7.5-10,7.5-11
cs.06 7.5-10,7.5-11,7.5-13,7.7-3,7.7-4,7.15-22
cs.07 7.7-4
cs.08 7.7-4
cs.09 7.5-10,7.5-13,7.7-3,7.7-4
cS. 10 7.7-4,7.15-16
cS.11 7.7-4,7.15-16
cS.12 7.7-4
cS.15 7.8-13,7.9-3
cS.16 7.9-3,7.9-5
cS.18 7.8-13,7.9-3
cS.19 7.5-13,7.6-5,7.8-13,7.8-14,7.8-15,7.9-3,7.11-22,7.11-23,7.11-27
cS.20 7.5-13,7.6-5,7.8-13

cs.21 7.8-13
cS.22 7.8-13
cs.23 7.5-13,7.8-13,7.9-3
cs.25 7.5-13,7.7-3,7.7-5
cs.26 7.5-13,7.7-3
cs.28 7.7-6,7.7-7
cs.29 7.7-6
Current limit
level7.13-24
Cycle time.....9.1-4
Cyclic duration factor.....9.1-5

D

Data transfer.....7.1-27
DC
brake 7.15-3
link 2.1-3
DC-link
voltage 7.1-9
Default set 7.14-5
di.00 3.1-4,7.3-4
di.01 7.3-3,7.3-5,7.3-11,7.3-12
di.02 7.3-5,7.3-11,7.3-12
di.03 7.3-6
di.04 7.3-6
di.05 7.3-6
di.06 7.3-7
di.07 7.3-7,7.3-8
di.08 7.3-7
di.09 7.3-8,7.3-9,7.3-10
di.10 7.3-8
di.11 7.3-3,7.3-9,7.3-10,7.3-11,7.3-12,7.12-4,7.12-5,7.12-63,7.12-73
di.22 7.3-9,7.3-10,7.3-11,7.3-12,7.12-63,7.12-73
di.23 7.3-3,7.3-6
di.24 7.3-9,7.3-11,7.12-34,7.12-38,7.12-71,7.12-72,7.12-73
di.35 7.3-9,7.3-11,7.12-34,7.12-38,7.12-71,7.12-72,7.12-73
di.36 7.3-9,7.3-11,7.3-12,7.13-36,7.13-37
di.37 7.3-9,7.3-11,7.3-12
di.38 7.3-12
di.39 7.3-9,7.3-11,7.3-12,7.13-38
Diameter
correction 7.15-18,7.15-20
ratio 7.15-21
signal.....7.15-21
digital
mass 3.1-3
Digital filter.....7.3-6
DIN 66019 .....7.1-27
dmin/dmax.....7.15-21
do.00 7.3-12,7.3-14,7.3-15,7.3-19,7.3-20,7.3-24,7.12-11,7.12-47,7.12-48,7.12-74
do.01 7.3-20,7.3-24,7.12-48
do.02 7.3-24,7.12-48
do.03 7.12-48
do.04 7.12-48
do.07 7.3-12,7.3-14,7.3-15,7.3-19,7.3-20,7.12-74
do.08 7.3-14,7.3-20
do.09 7.3-20
do.10 7.3-24
do.15 7.3-14,7.3-20
do.16 7.3-14,7.3-20,7.3-24,7.12-47,7.12-48
do.17 7.3-24,7.12-48
do.18 7.3-24,7.12-48
do.19 7.12-48
do.23 7.3-14,7.3-20
do.24 7.3-14,7.3-20,7.3-21,7.3-24,7.12-48
do.25 7.3-14,7.3-21,7.3-24
do.26 7.3-24
do.27 7.3-24
do.28 7.3-3,7.3-4
do.31 7.12-48
do.32 7.3-21
do.33 7.3-14,7.3-21,7.3-22,7.3-24,7.12-47
do.34 7.3-24
do.35 7.3-24
do.36 7.3-3,7.3-4
do.37 7.12-48
do.39 7.12-48
do.40 7.3-21,7.3-22
do.41 7.3-4,7.3-14,7.3-22,7.3-24,7.12-48
do.42 7.3-14,7.3-22
do.43 7.3-14
do.44 7.3-14
do.51 7.3-14,7.3-23,7.3-24
dr.00 7.5-8,7.5-9,7.5-16,7.5-22,7.11-23,7.15-5
dr.01 7.5-8,7.5-12,7.11-23
dr.02 7.5-8,7.5-9,7.5-10,7.5-12,7.11-23
dr.03 7.2-14,7.5-8,7.5-12,7.7-3,7.11-23
dr.04 7.5-8,7.5-12,7.5-16,7.11-23
dr.05 7.5-8,7.5-10,7.5-12,7.11-23
dr.06 7.5-9,7.5-15,7.5-16,7.11-23
dr.07 7.5-16,7.5-19,7.11-23
dr.08 7.5-16,7.5-19
dr.09 7.5-9,7.5-10
dr.10 7.5-15,7.5-16
dr.11 7.13-25
dr.12 7.13-25
dr.14 7.2-14,7.8-4
dr.15 7.8-4,7.8-5,7.8-6,7.9-3,7.13-27
dr.16 7.5-13,7.8-5,7.13-12,7.13-18
dr.17 7.5-13,7.5-17,7.5-18,7.5-20,7.5-22
dr.18 7.5-13,7.5-15,7.5-23,7.8-4,7.8-5
dr.19 7.5-13,7.5-15,7.5-16,7.5-19,7.5-23
dr.20 7.5-13,7.5-15
dr.23 7.6-3,7.6-6,7.6-10,7.11-23,7.13-27
dr.24 7.6-3,7.6-17,7.11-23,7.11-24,7.13-27
dr.25 7.6-3,7.11-23,7.11-24
dr.26 7.6-3,7.6-4,7.6-11,7.8-6,7.11-23
dr.27 7.2-14,7.6-3,7.8-6,7.8-9,7.11-23
dr.28 7.6-3,7.6-4,7.11-23,7.13-27
dr.30 7.6-3,7.6-11,7.11-23
dr.31 7.6-3,7.6-10,7.11-23
dr.32 7.2-14,7.8-9,7.11-23
dr.33 7.6-5,7.8-8,7.8-9,7.8-10,7.11-23,7.13-27
dr.34 7.13-27
dr.35 7.13-27
dr.36 7.13-28
dr.37 7.8-4,7.8-12,7.8-14,7.10-4,7.15-5
dr.39 7.8-9
dr.40 7.8-10
dr.48 7.5-16,7.5-17,7.5-18,7.5-19,7.5-20,7.5-21,7.5-22,7.5-23,7.6-8,7.6-9,7.6-10,7.6-11,7.6-12
dr.49 7.5-17,7.5-20,7.5-21,7.6-10,7.6-11
dr.50 7.13-27,7.13-28
dr.58 7.5-21,7.6-11
dr.59 7.5-21,7.6-11
dr.62 7.5-16,7.6-8
dr.63 7.6-3,7.6-4,7.6-11
dS.00 7.5-13,7.6-5,7.10-3
dS.01 7.5-13,7.6-5,7.10-3
dS.02 7.10-3
dS.03 7.8-4,7.8-5,7.8-10,7.8-12,7.8-13,7.10-3,7.10-4,7.15-5
dS.04 7.5-16,7.5-21,7.5-22,7.5-28,7.8-3,7.15-5
dS.08 7.8-3
dS.09 7.8-3
dS.10 7.8-3

ds.11 7.5-13,7.5-22
ds.12 7.5-13,7.5-22
dS.13 7.5-13,7.5-22,7.8-3,7.8-7,7.8-8,7.8-9,7.8-12
dS.14 7.5-13,7.5-28
dS.15 7.5-13,7.5-28
dS.17 7.5-28
dS.18 7.5-25,7.5-26
dS.19 7.5-13,7.5-24
dS.20 7.5-24,7.5-25
dS.21 7.5-23,7.5-24,7.5-25
dS.22 7.5-23,7.5-24,7.5-25

E

Ec.00 7.13-8
EMV
conform installation 7.11-3
Encoder 7.11-12
Error
diagnosis 8.1-3
last 8.1-3

F

Factory setting 7.14-5
Fan cooling 9.1-3
Filter time 7.3-14
Fixed frequency 3.1-3,7.4-11
flag
adjust 7.3-24
Fr.01 7.6-11,7.14-3,7.14-4,7.14-5,7.14-6,7.14-7
Fr.02 7.14-3,7.14-8,7.14-9,7.14-10,7.14-11,7.14-12
Fr.03 7.13-7,7.14-12
Fr.04 7.14-8
Fr.05 7.14-13
Fr.06 7.14-13
Fr.07 7.3-9,7.3-10,7.14-9,7.14-10,7.14-11
Fr.08 7.13-26,7.13-27
Fr.09 7.14-4,7.14-5
Fr.10 7.5-9,7.5-10,7.5-12,7.5-14,7.5-22,7.5-24,7.6-5,7.6-11,7.6-12,7.6-17,7.7-3,7.10-3,7.11-18,7.11-23,7.11-28,7.14-3,7.14-9
Fr.11 7.3-9,7.3-10,7.14-11
Fr.12 7.14-12
Fundamentals 4.1-3

G

Gear factor
analog setting 7.11-16
set-programming 7.11-16

H

HSP5-cable 10.1-4
Hysteresis 7.3-20

I

In.00 7.1-23
In.01 7.1-23,7.2-14,7.13-13,7.13-18,7.13-22,7.13-24
In.03 7.1-24
In.04 7.1-24
In.06 7.1-24
In.10 7.1-25
In. 11 7.1-25
In.12 7.1-25
In. 13 7.1-25
In.14 7.1-25
In.15 7.1-25
In.16 7.1-25
In. 17 7.1-25
In.18 7.5-16,7.6-8,7.6-17
In.22 7.1-25
In.23 7.1-25
In. 24 7.1-25
In. 25 7.1-26
In.26 7.1-26
In.27 7.1-26
In.28 7.1-26
In. 29 7.1-26
In.30 7.1-26
In.31 7.1-26
In.39 7.6-11
In.40 7.6-11
Incremental encoder
input 7.11-6
output 7.11-6
input
coded set selection 7.14-10
Input
terminal
status 7.1-10
Inputs
Analog 7.3-6
Input trigger 7.1-27
InterBus
Loop 10.1-6
operator 10.1-3
InterBus operator 10.1-6
Interface 7.2-6
operator 10.1-3
Interface operator 10.1-4
Interference suppression filter ..7.3-6
Inverter
rated current 7.1-6
status 7.1-23

J

K

Keep-On-Running 7.13-3

L

LE.00 7.15-9,7.15-12,7.15-22
LE.01 7.3-24
LE.02 7.3-24
LE.07 7.3-18,7.3-20,7.15-12
LE.08 7.3-20
LE. 8...15 .....7.3-20
LE.09 7.3-20,7.3-24
LE.10 7.3-24
LE.15 7.3-20
LE.16 7.3-16,7.3-20,7.13-37,7.15-4
LE.17 7.3-9,7.3-10,7.15-9,7.15-11
LE.18 7.15-9,7.15-11
LE.19 7.3-9,7.3-10,7.15-9,7.15-11
LE.20 7.15-9,7.15-12
LE.21 7.15-9,7.15-11,7.15-12
LE.22 7.3-9,7.3-10,7.15-9,7.15-11
LE.23 7.15-9,7.15-11
LE.24 7.3-9,7.3-10,7.15-9,7.15-11
LE.25 7.15-9,7.15-12
LE.26 7.15-9
LE.27 7.8-14,7.8-15
Level 0...7 .....7.15-12
limit switch error 7.6-15

M

Master 7.1-27
position 7.1-17
mode 7.9-5,7.15-18
Mode 7.9-4,7.9-5
Modulation
degree 7.1-15
hour meter 7.1-15
Motor
poti
function 7.15-6
rise time 7.15-8
protection
function 7.13-25
set assignment 7.13-25
temperature 7.1-16
Motorpoti
actual value 7.1-14
Max. value 7.15-9
Min. value 7.15-9
Ramp time 7.15-8

N

Net
rectifier 2.1-3
work components.....10.1-3
nn.00 7.6-8,7.6-11,7.6-14,7.6-16, 7.6-17,7.6-18
nn.01 7.6-5,7.6-13,7.6-14,7.6-15, 7.6-16,7.6-17
nn.02 7.6-5,7.6-14,7.6-15
nn.03 7.6-5,7.6-14,7.6-15
nn.04 7.6-17
nn.05 7.6-17
nn.06 7.6-17
nn.07 7.6-17
nn.08 7.6-13,7.6-14,7.6-15
nn.09 7.6-14
nn.10 7.6-5,7.6-12,7.6-13,7.6-16, 7.6-17
nn.11 7.6-5
nn.12 7.6-18
nn.13 7.6-19
Non-programmable Parameters..... 4.1-5,7.14-3
NPN 3.1-4,7.3-4

O

oP.00 7.4-4,7.4-5,7.12-78
oP.01 7.4-7,7.4-8,7.4-9,7.4-10,7.4-11,7.12-4,7.12-78,7.13-6
oP.02 7.4-7,7.4-8,7.4-10
oP.03 7.4-4,7.12-77,7.12-78,7.12-79
oP.05 7.2-11,7.4-4
oP.06 7.3-19,7.4-4,7.4-5,7.4-15,7.13-23
oP.07 7.3-19,7.4-4,7.4-5,7.4-15
oP.10 7.4-4,7.4-5,7.4-13,7.4-14,7.4-15,7.12-21,7.12-27,7.12-28,7.12-35,7.12-36,7.12-37,7.12-44,7.12-45,7.12-46, 7.13-23
oP.11 7.4-4,7.4-5,7.4-13,7.4-14,7.4-15,7.12-21,7.12-27
oP.14 7.4-5,7.4-13,7.4-14,7.12-13,7.12-21,7.12-27,7.12-28, 7.12-77,7.12-80
oP.15 7.4-13,7.4-14,7.12-13,7.12-21,7.12-27,7.12-77,7.12-80
oP.18 7.4-11,7.4-12
oP.19 7.3-9,7.3-10,7.4-11,7.4-12, 7.12-44
oP.20 7.3-9,7.3-10,7.4-11,7.4-12
oP.21 7.4-11,7.4-12
oP.22 7.4-11,7.4-12
oP.23 7.4-11,7.4-12
oP.27 7.4-18,7.4-20
oP.28 7.4-16,7.4-17,7.4-18,7.4-20,7.12-18,7.12-19,7.12-27, 7.12-28
oP.29 7.4-16,7.4-18
oP.30 7.4-16,7.4-18
oP.31 7.4-16,7.4-17,7.4-18,7.12-27
oP.32 7.4-17,7.4-18,7.4-19,7.12-27,7.12-28
oP.33 7.4-18
oP.34 7.4-18
oP.35 7.4-18,7.12-27
oP.40 7.4-14,7.6-17,7.12-27,7.13-8,7.13-23
oP.41 7.4-14,7.6-17,7.13-8
oP.44 7.15-18,7.15-19,7.15-20,7.15-21
oP.45 7.15-18,7.15-19,7.15-20,7.15-21
oP.46 7.15-19,7.15-21
oP.47 7.15-19
oP.48 7.15-19
oP.49 7.15-21
oP.50 7.15-6,7.15-8
oP.52 7.4-4,7.11-17,7.15-7,7.15-9
oP.53 7.11-17,7.15-9
oP.54 7.11-17,7.15-9
oP.55 7.15-7,7.15-8
oP.56 7.3-9,7.3-10,7.15-7
oP.57 7.3-9,7.3-10,7.15-7
oP.58 7.3-9,7.3-10,7.15-7
oP.59 7.15-7,7.15-8
oP.60 7.3-9,7.3-10,7.4-8,7.4-9
oP.61 7.3-9,7.3-10,7.4-8,7.4-9
oP.62 7.4-17
oP.63 7.4-4,7.4-6,7.4-7
oP.64 7.4-4,7.4-5,7.4-6,7.4-7
oP.65 7.4-15,7.5-26
oP.66 7.4-15
oP.67 7.4-15
oP.68 7.4-15,7.5-26
oP.70 7.12-27,7.12-28
oP.73 7.12-27
oP.74 7.7-7,7.7-8
Operating
data 7.1-3
mode 4.2-3
Operating surface 7.16-3
Output
flags
status 7.1-11
terminal 7.1-12
status 7.1-12,7.3-23
voltage 7.1-9
outputs
digital
Terminal status 7.3-6
Outputs
Analog 7.2-12
over
current 7.13-3
load 7.13-26

P

Parameter 4.1-3
groups 4.1-3
number 4.1-3
set
active 7.1-12
lock 7.14-12
selection 7.14-8
sets 4.1-3,7.14-3
value 4.1-3
Parameter listing..... 11.1-5
Password
level4.2-5
structure 4.2-3
Peak
braking power 9.1-4
utilization 7.1-8
PID
Output
externally 7.1-17
Pn.00 7.13-15
Pn.03 7.13-5,7.13-10,7.13-11,7.13-16
Pn.04 7.3-9,7.3-10,7.13-5,7.13-36
Pn.05 7.12-77,7.12-78,7.12-80,7.13-3,7.13-5,7.13-6,7.13-10,7.13-11,7.13-16
Pn.06 7.12-78,7.12-80,7.13-6
Pn.7 7.12-9,7.12-28,7.12-64,7.13-3,7.13-6,7.13-10,7.13-11, 7.13-16
Pn.08 7.13-7,7.13-10,7.13-11
Pn.10 7.13-7
Pn.11 7.13-7,7.13-10
Pn.12 7.13-7,7.13-28
Pn.15 7.13-7,7.13-10
Pn.16 7.13-22,7.13-23,7.13-24
Pn.18 7.13-22,7.13-23,7.13-24,7.14-12
Pn.19 7.13-20,7.13-21,7.13-22
Pn.20 7.3-9,7.3-10
Pn.21 7.13-20,7.13-21
Pn.22 7.13-20,7.13-21
Pn.24 7.5-26
Pn.25 7.3-9
Pn.26 7.5-26

Pn.29 7.15-3,7.15-4,7.15-5
Pn.30 7.15-5
Pn.31 7.15-3
Pn.33 7.3-11
Pn.34 7.3-11
Pn.35 7.15-14
Pn.36 7.15-13,7.15-14,7.15-15,7.15-17
Pn.37 7.15-13,7.15-14
Pn.38 7.15-14
Pn.39 7.15-13
Pn.40 7.15-13
Pn.41 7.13-29,7.13-30,7.13-31
Pn.42 7.13-29,7.13-30,7.13-31
Pn.43 7.13-29
Pn.44 7.13-29,7.13-30,7.13-32,7.13-33,7.13-34,7.13-35
Pn.46 7.13-29,7.13-30,7.13-32
Pn.47 7.13-29,7.13-33
Pn.48 7.13-29,7.13-33
Pn.50 7.13-29,7.13-33
Pn.51 7.13-29,7.13-33
Pn.52 7.13-29,7.13-31,7.13-32
Pn.53 7.13-29,7.13-33
Pn.54 7.13-13
Pn.55 7.13-13
Pn.56 7.12-9,7.13-12
Pn.57 7.13-16,7.6-5,7.12-9
Pn.58 7.3-9,7.3-10,7.13-35
Pn.59 7.12-4,7.13-6,7.13-10,7.13-11,7.13-16,7.13-36,7.13-37
Pn.61 7.12-9,7.13-12,7.13-16,7.13-18
Pn.62 7.13-35
Pn.64 7.13-15
Pn.65 7.3-11
Pn.67 7.15-16
Pn.68 7.15-16
Pn.69 7.13-9
Pn.70 7.13-9
Pn.75 7.3-4
Pn.76 7.12-26
Pn.81 7.1-15
Power factor control.....7.12-11
Power stage temperature.....7.3-9
Product description.....10.1-5
Profibus-DP operator.....7.3-9
Protective functions.....7.12-18
Protective Functions.....7.12-4
PS.00 7.12-4,7.12-80
PS.01 7.12-4,7.12-13,7.12-28,7.12-80
PS.02 7.12-13,7.12-19,7.12-21,7.12-27,7.12-28,7.12-31,7.12-80
PS.03 7.3-9,7.3-10,7.12-24
PS.04 7.3-11
PS.05 7.3-11,7.12-11
PS.06 7.12-5,7.12-6,7.12-7,7.12-8
PS.07 7.12-4,7.13-6
PS.08 7.12-4,7.13-6
PS.09 7.3-11,7.12-6,7.12-7,7.12-10,7.12-11
PS.10 7.3-9,7.3-10,7.12-5
PS.11 7.3-9
PS.13 7.12-6,7.12-7
PS.14 7.12-6,7.12-7,7.12-10
PS.15 7.12-6,7.12-7
PS.16 7.12-34,7.12-37
PS.17 7.3-11,7.12-28,7.12-34,7.12-35,7.12-37,7.12-38,7.12-40
PS.18 7.12-12,7.12-27,7.12-28,7.12-31,7.12-35
PS.19 7.12-34,7.12-37,7.12-38,7.12-40
PS.20 7.3-11,7.12-34,7.12-35,7.12-37,7.12-38,7.12-39
PS.21 7.12-34,7.12-39,7.12-40,7.12-42,7.12-44
PS.22 7.3-9,7.3-10
PS.23 7.12-47,7.12-71,7.12-74
PS.24 7.12-27,7.12-35,7.12-37,7.12-38,7.12-39,7.12-44,7.12-45,7.12-46,7.12-62
PS.25 7.12-65,7.12-67,7.12-73
PS.26 7.12-76,7.12-77
PS.27 7.12-76,7.12-77,7.12-78,7.12-79
PS.28 7.12-72,7.12-73,7.15-22
PS.29 7.3-9,7.3-11
PS.30 7.3-9,7.3-11
PS.31 7.3-9,7.3-11,7.12-34,7.12-38
PS.32 7.12-50,7.12-51,7.12-52,7.12-54
PS.33 7.12-55
PS.34 7.2-15,7.12-70
PS.35 7.2-15,7.12-70
PS.36 7.3-9,7.3-11
PS.37 7.12-59,7.12-60,7.12-61,7.12-65
PS.38 7.12-64
PS.39 7.12-37,7.12-58,7.12-59,7.12-62,7.12-64
PS.40 7.12-37,7.12-58,7.12-59,7.12-62,7.12-63
PS.41 7.12-69
PS.42 7.12-67

Q

QS-Number 7.1-25

R

Ramp
calculation 7.4-3
generator.....7.4-16
output
display 7.1-6
settings.....7.4-3
Rated DC voltage 7.1-18
re
start 7.15-18
Reset
Error messages.....4.1-5
Peak values 4.1-5
Rotation
selection.....7.4-3
Rotor adaption
factor.....7.1-18
RS232/485.....10.1-3
RS485 interface.....10.1-4
ru.00 7.1-6,7.5-16,7.6-6,7.6-8,7.13-3,7.13-15,7.13-16,7.13-37
ru.01 7.1-6,7.4-3,7.5-21,7.13-37,7.15-4,7.15-14,7.15-15
ru.02 7.1-6,7.4-3,7.9-4,7.13-21,7.15-4
ru.03 7.1-6,7.4-3,7.15-4,7.15-5
ru.07 7.1-7,7.4-14,7.6-15,7.6-17,7.13-8,7.13-9,7.13-37,7.15-5
ru.09 7.1-7,7.6-6
ru.10 7.1-7,7.6-6
ru.11 7.1-7
ru.12 7.1-7,7.5-20,7.5-21,7.5-25,7.6-9,7.6-11,7.6-17
ru.13 7.1-8,7.13-24
ru.14 7.1-8
ru.15 7.1-8,7.13-18,7.13-23,7.13-25,7.13-27
ru.16 7.1-8
ru.17 7.1-9,7.6-17,7.13-18,7.13-23
ru.18 7.1-9,7.13-21
ru.19 7.1-9
ru.20 7.1-9
ru.21 7.1-10
ru.22 7.1-10
ru.23 7.1-11
ru.24 7.1-11
ru.25 7.1-12,7.3-23
ru.26 7.1-12,7.13-27,7.15-8
ru.27 7.1-12

ru.28 7.1-12,7.2-3
ru.29 7.1-13,7.2-3
ru.30 7.1-13,7.2-3
ru.31 7.1-13,7.2-3
ru.32 7.1-13,7.2-3
ru.33 7.1-14
ru.34 7.1-14
ru.35 7.1-14
ru.36 7.1-14
ru.37 7.1-14,7.4-4,7.9-3,7.15-7,7.15-9
ru.38 7.1-15
ru.39 7.1-15,7.13-5
ru.40 7.1-15
ru.41 7.1-15
ru.42 7.1-15,7.5-15,7.5-23,7.13-16
ru.43 7.1-15,7.15-9,7.15-11,7.15-12
ru.44 7.1-16,7.15-9,7.15-11,7.15-12
ru.45 7.1-16
ru.46 7.1-16,7.13-16
ru.47 7.1-16
ru.48 7.1-16
ru.49 7.1-17
ru.52 7.1-17,7.4-4
ru.53 7.1-17
ru.54 7.1-17,7.13-6
ru.56 7.1-17
ru.57 7.9-3
ru.58 7.1-18,7.1-19
ru.59 7.1-18,7.1-19,7.1-20,7.1-21,7.1-22,7.5-4
ru.60 7.1-18
ru.61 7.1-18
ru.63 7.1-19,7.4-4
ru.68 7.1-19,7.13-31,7.13-36
ru.69 7.1-19
ru.71 7.1-19
ru.73 7.1-19
ru.74 7.1-20
ru.78 7.1-20
ru.79 7.1-20,7.1-21,7.6-4,7.13-8
ru.80 7.1-21
ru.81 7.1-21
ru.82 7.1-21
ru.83 7.1-22
ru.84 7.1-22
ru.85 7.1-22

S

Sampling frequency.....7.11-8
Scope Timer 7.1-28
S-curves 7.4-16
  time 7.4-18
Selection of a parameter 4.1-4
Sercos Operator 10.1-8
Serial interface.....7.1-27
Serial number 7.1-25
Service mode.....4.2-3
Setpoint 7.4-3,7.4-7,7.4-11
  and ramp presetting 7.4-3
  calculation 7.4-3
Setpoint
  setting 3.1-5
Setpoint value
  calculation 7.4-15
  display 7.1-6
  fluctuations 3.1-5
  limits 7.4-13
Set speed 7.1-30
  Value 7.1-30
Setting parameter set .7.14-8,7.14-9
Set torque 7.1-7
  limit 7.1-16
Signal source selection.....7.3-5
Slave 7.1-27
  position.....7.1-17
Software
  date 7.1-24
source
  Parameter set 7.14-8
Source set 7.14-4
Special
  functions.....7.15-3
Speed
  sampling time.....7.11-12
ST 7.3-3
Stall
  function 7.13-22
Starting frequency 7.15-14
Start-up.....6.2-3
Static strobe.....7.3-7
Status control.....7.4-10
Strobe 7.3-7
  mode 7.3-7
Switching
  cabinet design.....9.1-3
  condition.....7.3-20
    linking 7.3-22
    Status 7.1-11
  Condition
    Select 7.3-24
  frequency 7.1-16
    Max.....7.1-24
  hysteresis 7.3-20
Sy.02 7.1-27
Sy.03 7.1-27
Sy.06 7.1-27
Sy.07 7.1-27
Sy.08 7.1-28
Sy.09 7.1-28,7.12-78,7.13-6
Sy.11 7.1-28
Sy.16 7.12-79
Sy.17 7.12-79
Sy.18 7.12-79
Sy.19 7.12-79
Sy.20 7.12-79
Sy.21 7.12-79
Sy.24 7.12-79
Sy.25 7.12-79
Sy.26 7.12-79
Sy.27 7.12-79
Sy.28 7.12-79
Sy.29 7.12-79
Sy.32 7.1-28
SY.41 7.1-28,7.1-29
SY.42 7.1-29
SY.43 7.1-28,7.1-29,7.3-11,7.3-12,7.13-14,7.13-19
SY.44 7.1-29,7.13-15
SY.50 7.1-28,7.1-29,7.3-11,7.3-12,7.4-7,7.4-11,7.4-12,7.12-78,7.12-79,7.13-14,7.13-19,7.14-8
Sy. 51 7.1-29,7.12-79,7.13-15,7.13-37
SY.52 7.1-30,7.4-4
SY.53 7.1-30
Sy.56 7.1-30

T

Target set.....7.14-4
Telegrams 7.1-28
Temperature
  mode 7.1-25
Terminal status 7.3-6
thermal overheating.....7.13-3
Timer 7.15-9
  programming.....7.15-9
tool path feedrate.....7.15-20
Torque reference 7.9-3,7.9-5
Transistor output.....3.1-3
tripping times 7.13-25
Type code 2.1-5

U

ud. 01 4.2-3
ud.02 5.1-3
Ud.02 7.4-4,7.4-5,7.4-6,7.4-16,7.6-3,7.12-80,7.13-24,7.14-6,7.14-7,7.15-5
ud. 09 7.14-6
ud.15 7.14-6,7.16-3,7.16-4,7.16-6,7.16-9

ud.16 7.14-6,7.16-3,7.16-4,7.16-6,7.16-9
ud.17 7.14-6,7.16-3,7.16-4,7.16-6,7.16-9
ud.18 7.14-6,7.16-5,7.16-7,7.16-9
ud.19 7.16-7,7.16-9
ud.20 7.16-7,7.16-9
ud.21 7.16-7,7.16-8,7.16-9
ud. 23 7.16-11,7.16-12
ud. 24 7.16-4,7.16-12
uf.00 7.5-4,7.5-6,7.5-10
uf.01 7.5-4,7.5-10,7.15-22
uf.02 7.5-5,7.5-10
uf.03 7.5-5,7.5-10
uf.04 7.5-4
uf.05 7.5-4
uf.06 7.5-7,7.5-8,7.5-11,7.15-6
uf.07 7.5-7,7.15-5
uf.08 7.3-9,7.3-10,7.5-7,7.5-11,7.15-6
uf.09 7.5-6,7.5-9,7.5-10,7.5-12,7.5-13,7.5-14,7.6-5,7.13-30,7.13-32
uF.10 7.5-4,7.5-5
uf.11 7.10-5,7.14-7
uF.12 7.13-15,7.13-16
uF.13 7.13-16
uF.15 7.8-4,7.8-6,7.10-4,7.13-4
uF.16 7.5-10,7.5-11
uF.17 7.5-10,7.5-11
uF.18 7.5-20,7.5-22,7.6-11,7.6-12
uf.21 7.3-9,7.3-11,7.5-23,7.6-12
underload.....7.13-26
Unit data 7.1-3
Using
  intended 2.1-4
Utilization
  actual 7.1-8

V

V/Hz-characteristic 7.15-5
Voltage
  reduction 7.15-5

W

winding product 7.15-20
Wobbel
  amplitude 7.15-19
  generator.....7.15-19
Write protection 4.2-3

X

Y

Z

Zero point hysteresis 7.2-7

12.1.2 KEB contact data

The contact data of the national and international KEB agencies, as well as the industrial partner can be found at „www.keb.de“.

Karl E. Brinkmann GmbH
Försterweg 36-38 • D-32683 Barntrup
fon: +49 5263 401-0 • fax: +49 5263 401-116
net: www.keb.de • mail: info@keb.de

KEB Antriebstechnik GmbH & Co. KG
Wildbacher Str. 5 • **D**–08289 Schneeberg
fon: +49 3772 67-0 • fax: +49 3772 67-281
mail: info@keb-combidrive.de

KEB Antriebstechnik Austria GmbH
Ritzstraße 8 • **A**-4614 Marchtrenk
fon: +43 7243 53586-0 • fax: +43 7243 53586-21
net: www.keb.at • mail: info@keb.at

KEB Antriebstechnik
Herenveld 2 • **B**-9500 Geraadsbergen
fon: +32 5443 7860 • fax: +32 5443 7898
mail: vb.belgien@keb.de

KEB Power Transmission Technology (Shanghai) Co.,Ltd.
No. 435 QianPu Road, Songjiang East Industrial Zone,
CHN-201611 Shanghai, P.R. China
fon: +86 21 37746688 • fax: +86 21 37746600
net: www.keb.cn • mail: info@keb.cn

KEB Antriebstechnik Austria GmbH
Organizační složka
K. Weise 1675/5 • **CZ**-370 04 České Budějovice
fon: +420 387 699 111 • fax: +420 387 699 119
net: www.keb.cz • mail: info.keb@seznam.cz

KEB España
C/ Mitjer, Nave 8 - Pol. Ind. LA MASIA
E-08798 Sant Cugat Sesgarrigues (Barcelona)
fon: +34 93 897 0268 • fax: +34 93 899 2035
mail: vb.espana@keb.de

Société Française KEB
Z.I. de la Croix St. Nicolas • 14, rue Gustave Eiffel
F-94510 LA QUEUE EN BRIE
fon: +33 1 49620101 • fax: +33 1 45767495
net: www.keb.fr • mail: info@keb.fr

KEB (UK) Ltd.
6 Chieftain Buisiness Park, Morris Close
Park Farm, Wellingborough **GB**-Northants, NN8 6 XF
fon: +44 1933 402220 • fax: +44 1933 400724
net: www.keb-uk.co.uk • mail: info@keb-uk.co.uk

KEB Italia S.r.l.
Via Newton, 2 • **I**-20019 Settimo Milanese (Milano)
fon: +39 02 33535311 • fax: +39 02 33500790
net: www.keb.it • mail: kebitalia@keb.it

KEB Japan Ltd.
15–16, 2–Chome, Takanawa Minato-ku
J–Tokyo 108-0074
fon: +81 33 445-8515 • fax: +81 33 445-8215
mail: info@keb.jp

KEB Korea Seoul
Room 1709, 415 Missy 2000
725 Su Seo Dong, Gang Nam Gu
ROK-135-757 Seoul/South Korea
fon: +82 2 6253 6771 • fax: +82 2 6253 6770
mail: vb.korea@keb.de

KEB RUS Ltd.
Krasnokazarmeny proezd 1,
Metrostation „Aviamotornay“
RUS-111050 Moscow / Russia
fon: +007 445 695 3912 • fax: +007 495 645 3913
mail: info@keb.ru

KEB Sverige
Box 265 (Bergavägen 19)
S-43093 Hälsö
fon: +46 31 961520 • fax: +46 31 961124
mail: vb.schweden@keb.de

KEB America, Inc.
5100 Valley Industrial Blvd. South
USA-Shakopee, MN 55379
fon: +1 952 224-1400 • fax: +1 952 224-1499
net: www.kebamerica.com • mail: info@kebamerica.com

© KEB 00.F5.AEA-K420 05/2009