HLM 8620 5,7”
320 x 240 dots

STN LCD

PRELIMINARY SPECIFICATION

1. SCOPE

This specification defines general provisions as well as inspection standards for LCD module of Graphic type supplied by Data Display AG.
If the event of unforeseen problem or unspecified items may occur, naturally shall negotiate and agree to solution.

2. WARRANTY

Basicly, Warranty term is 6 Months after delivery date, Data Display could compensate for defectives which happen within warranty term on the condition that the products stored or used as specified under normal condition within the contents of specification.
Otherwise, it is impossible to compensate for defects in the case defects take place by customer´s mistake such as miss-handling or circuit change.
After 6 Months of warranty term, all compensation for defects is with charge.

3. FEATURES

Display Mode:	Transmissive and negative type Black and white mode FSTN LCD
Display Color:	Display dots: White Background: Black
Display format:	320 (w) x 240 (h) full dots
Input Data Display:	4-bits parallel data input from a LCD controller
Multiplexing ratio:	1/240 duty
Viewing direction	12 o´clock
Backlight:	CCFL (Cold cathode flurescent lamp)
Features:	TAB (Tape Automated Bonding) Method One connector solution

4. MECHANICAL SPECIFICATION

Item	Specifications	Unit
Dimensional outline	157.5 (W) x 121.6 (H) x 12.7 max. (t)	mm
Number of dots	320 (W) x 240 (H) dots	-
Number of characters	40C x 30L (1200) in case of 8 x 8 fonts	-
Viewing area	121.0 (W) x 91.6 (H)	mm
Active area	115.17 (W) x 86.37 (H)	mm
Dots pitch	0.36 (W) x 0.36 (H)	mm
Dots size	0.33 (W) x 0.33 (H)	mm
Weight	Typ. 185	g

5. MAXIMUM RATING

V_{ss} = 0V

Item		Symbol	Min.	Max.	Unit	Note
Supply voltage	Logic	Vdd	0	6.0	V	
	LCD drive	Vss - Vee	8	30	V	
Input voltage		Vi	0	Vdd	V	
Normal operating temperature		Tnop	0	50	°C	
Extended operating temperature		Top	- 5	55	°C	1
Storage temperature		Tstg	- 20	60	°C	
Humidity		-	-	90	%RH	2

Note 1: Temperature range with reduced optical parameters.

Note 2: Wet bulb temperature should be 29°C max. and no condensation of water.

6. ELECTRICAL CHARACTERISTICS

6.1 Electrical Characteristics

Item		Symbol	Condition	Min.	Typ.	Max.	Unit
Supply voltage	Logic	Vdd	-	4.75	5.0	5.25	V
	LCD drive	Vss - Vee		17.0	-	25.0	
Input Voltage	“H” Level	ViH	Vdd = 5V ± 5%	0.8Vdd	-	Vdd	V
	“L” Level	ViL		0	-	0.2Vdd	
Frame frequency		f flm	Vdd = 5V	70	75	80	Hz
Current consumption	Logic	Idd	Vdd=5V, Vee=25V Vss-Vo=18.6 V Note 1	-	6.2	10.0	mA
	LCD Drive	Iee		-	5.8	9.0	
LCD driving voltage (recommended voltage)		Vdd-Vo (Note 2,3)	Ta = -5 C Ø=0°, ⊖ =0°	(23.5)	(24.3)	(25.1)	V
			Ta = 0°C Ø=0°, ⊖ =0°	23.3	24.1	24.9	
			Ta = 25°C Ø=0°, ⊖ =0°	22.8	23.6	24.4	
			Ta = 50°C Ø=0°, ⊖ =0°	22.3	23.1	23.9	
			Ta = 55°C Ø=0°, ⊖ =0°	(22.1)	(22.9)	(23.7)	
LCD drivng voltage (recommended voltage)		Vdd-Vo (Note 2,4)	Ta = 0°C Ø =0°, ⊖ =0°	24.0	24.8	25.6	V
			Ta = 25°C Ø=0°, ⊖ =0°	24.0	24.8	25.6	
			Ta = 50°C Ø=0°, ⊖ =0°	24.0	24.8	25.6	

Note 1: Duty = 1/240, fFLM = 75 Hz, Ta = 25°C, display pattern = 1 bits mosaic mode non temperature compensation.

Note 2: Recommended LCD drive voltage fluctuate about = 0.8 V by each module.1

Note 3: When jump R16 register open temperature compensation is deactivated.

Note 4: When jump R16 register short temperature compensation is activated.

Backlight: IL-G-4S-S3C2 (JAE)

CN 2: ELCO Typ 00-6224-014-001-800

CN 1: DF13-14P-1.25H (Hirose)

6.2 Specification for CCFT backlight

Item	Unit	Min.	Typ.	Max.	
Brightness	cd/m²	-	250	-	• Inverter circuit: 8M • Inverter circuit voltage: 12 Vdc at primary side • Measurement condition 30 min. after turning on
Discharging tube voltage	Vrms	-	310	-	
Discharging tube current	mA	-	5	7	
Power consumption	W	-	-	2.7	
Circuit voltage	Vrms	800	900	-	Inverter output voltage
Life time	hours	30K	50K	-	Half brightness lifetime
Frequency	KHz	30	35	40	Sine symetric wave without spike

7. ELECTRO-OPTICAL CHARACTERISTICS

Item		Symbol	Temp.	Condition	Min.	Typ.	Max.	Unit	Note
LCD driving voltage (recommended voltage)		Vop	0°C	Ø=0°,⊖=0°	23.3	24.1	24.9	V	1,2,6
			25°C		22.8	23.6	24.4		
			50°C		22.3	23.1	23.9		
Response time	Rise time	tr	0°C	Ø=0°,⊖=0°	-	800	1000	mS	1,3,6
			25°C		-	200	300		
	Decay time	td	0°C		-	1100	1300		
			25°C		-	150	200		
Viewing angle (6H)		Ø	25°C	Vertical	30	-	40	deg	1,4,6
				Horizontal	40	-	40		
Contrast ratio		K	25°C	Ø=0°,⊖=0°	20	25	-	-	1,5,6

Note 1: Definition of Ø and ⊖

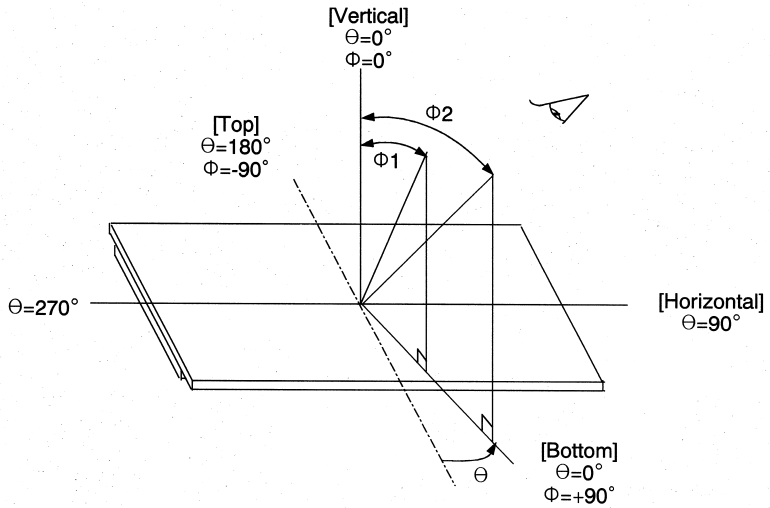

Note 2: Contrast ratio higher than 2 (K ≥ 2) can be obtaines in this voltage range.

Note 3: Definition of response time wave form

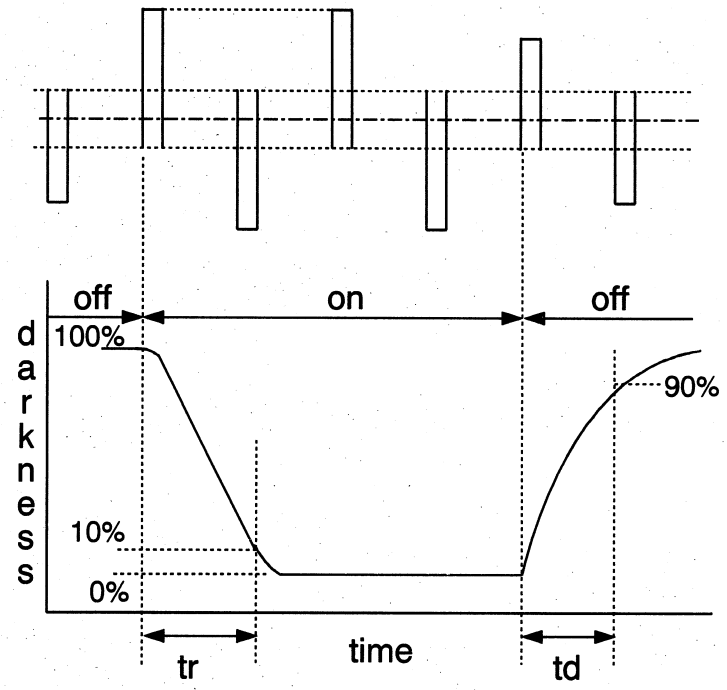

Note 4: Definition of viewing angle (△⊖)

△Ø = I Ø1 – Ø2 I

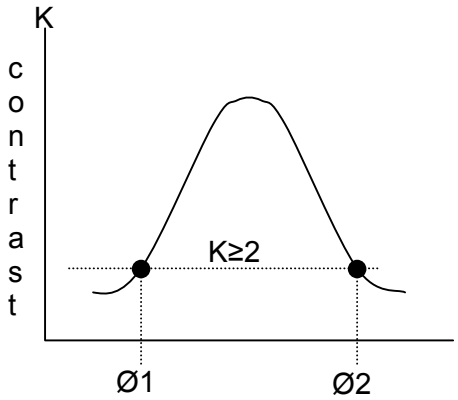

Note 5: Definition of contrast ratio (K)

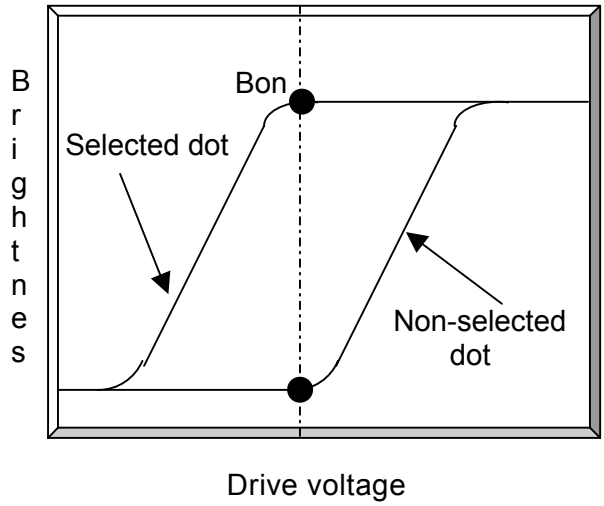

Note 6: Optical measuring system

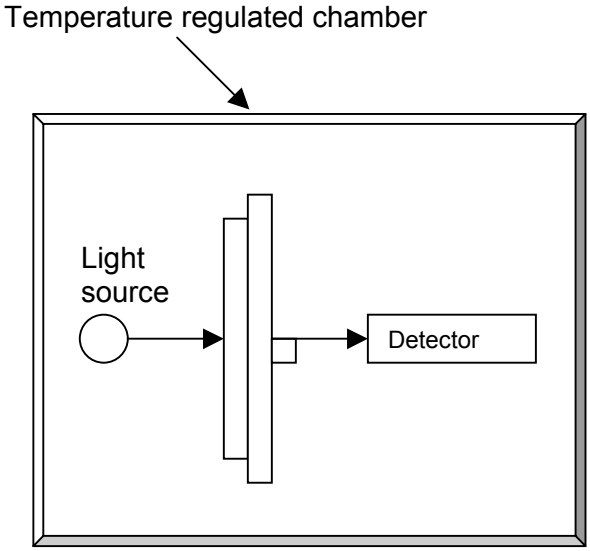

Measuring equipment: DMS
(Made in AUTRONIC)

$$\text{Contrast ratio (K)} = \frac{\text{Brightness of selected dot (Bon)}}{\text{Brightness of non-selected dot (Boff)}}$$

8. I/O TEMINAL

8.1 I/O Connection

Pin No.	Symbol	Function
1	Vo	Operating voltage for LCD driving (variable)
2	Vee	Power supply for LCD drive voltage (-V)
3	D3	Display data
4	D2	Display data
5	D1	Display data
6	D0	Display data
7	NC	Not connected
8	Vss	Signal ground (GND)
9	Vdd	Power supply for logic (+5V)
10	CP2(CL2)	Data shift clock pulse
11	CP1(CL1)	Data latch pulse
12	S(FLM)	The signal indicates the beginning of each frame
13	Disp.off	Display off signal ("H"=on, "L"=off)
14	FG	Frame ground (GND)

8.2 CCFT connection

Pin No.	Symbol	Function	Pin NO.	Symbol	Function
1	H	High voltage (Pink)	3	NC	Not connected
2	NC	Not connected	4	GND	Ground (White)

8.3 Example of power supply

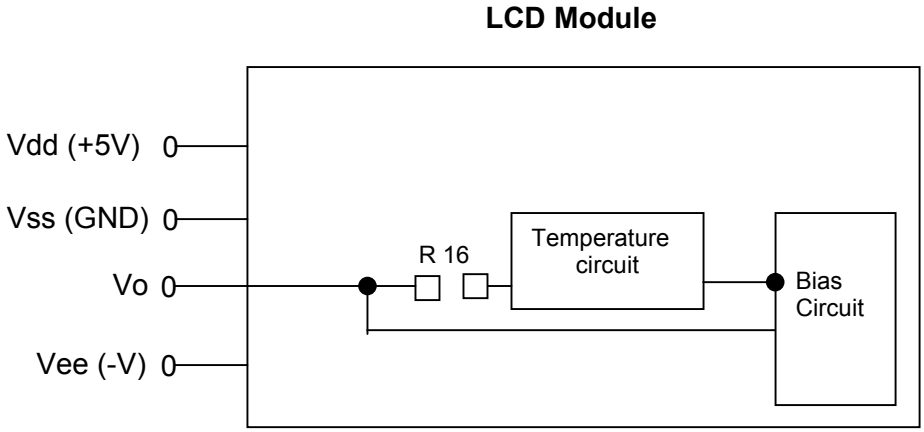

8.4 Circuit block diagram

The circuit block diagram is shown in Fig. 8-1. The LCD module needs two power source Vdd for logic and Vee for LCD drive.

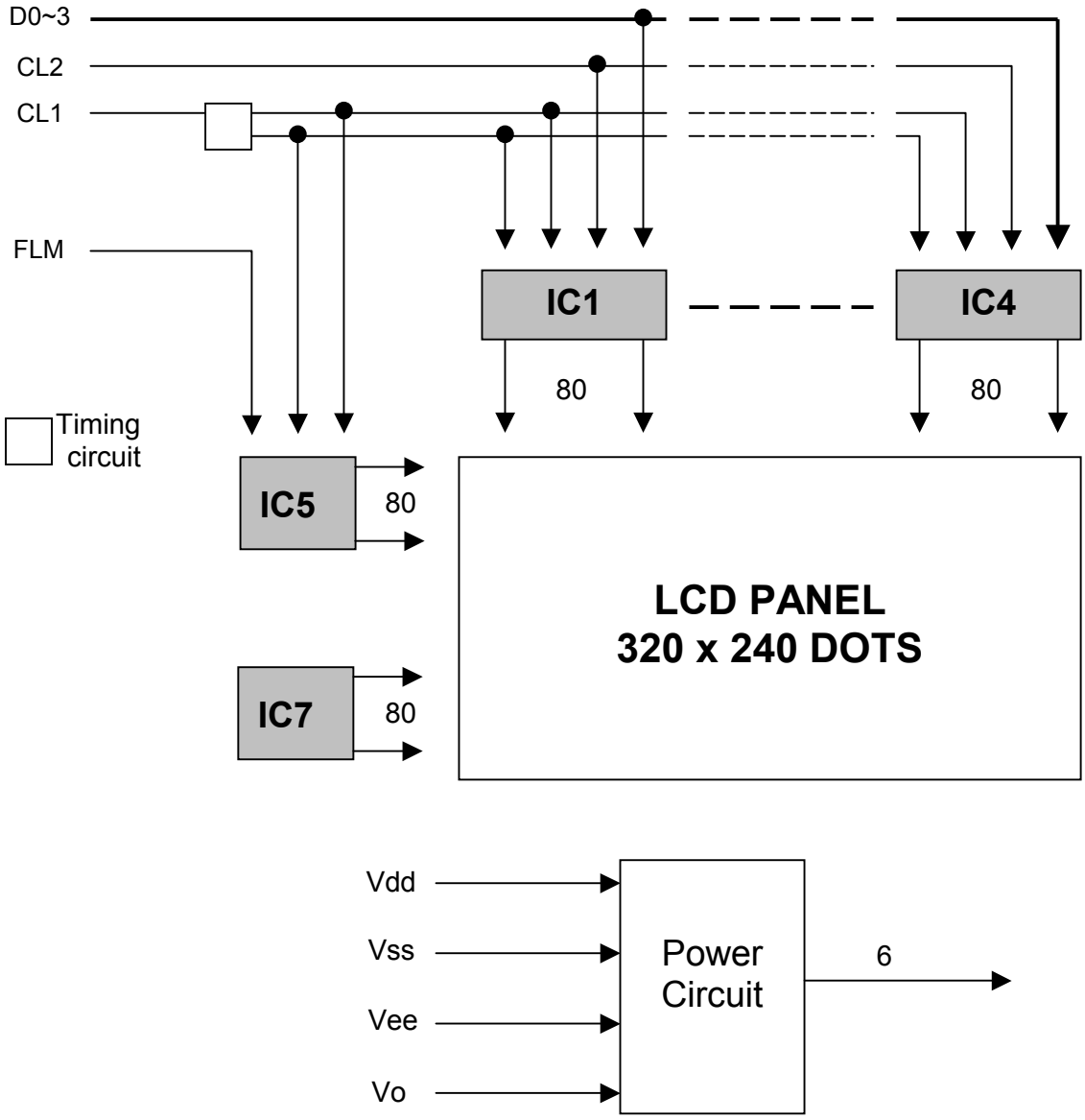

Fig. 8-1 Block diagram

Note 1: It is necessary to guard all signals from external noise as signal lines are directly connected to C-MOS and are not pull-up or pull-down internally.

8.5 Signal timing diagram

8.5.1 Segment driver application

(Vss = 0V, Vdd = 5V ± 10 %, Ta = 25 °C)

ITEM	SYMBOL	CONDITION	MIN.	MAX.	UNIT
Clock cycle time	tCY	Duty=50%	125	-	ns
Clock pulse width	tWCK	-	45	-	
Clock rise/fall time	tR, tF	-	-	30	
Data set-up time	tDSU	-	30	-	
Data hold time	tDH	-	30	-	
Clock set-up time	tCUS	-	80	-	
Clock hold time	tCH	-	80	-	
Propagation deray time	tD	ELB, ERB output	-	60	
ELB, ERB set-up time	tSU	ELB, ERB input	30	-	
Disp offB low pulse time	tWL	-	1.2	-	Ms
Disp offB clear time	tCD	-	100	-	Ns
M-out propagation delay time	tPD1	CL = 15 pF	-	1.0	Ms
CL1-out propagation delay time	tPD2		-	1.0	
Disp offB-out propagation delay time	tPD3		-	1.0	

8.5.2 Common driver application

(Vss = 0V, Vdd = 5V ± 10 %, Ta = 25 °C)

Item	Symbol	Condition	Min.	Max.	Unit
Clock cycle time	tCY	Duty = 50 %	250	-	Ns
Clock pulse width	tWCKH	-	45	-	
Clock rise/fall time	tR, tF	-	-	50	
Data set-up time	tDSU	-	30	-	
Data hold time	tDH	-	30	-	
Disp offB low pulse time	tWDL	-	1.2	-	Ms
Disp offB clear time	tCD	-	100	-	Ns
Output delay time	tDL	-	-	200	
M-out propagation delay time	tPD1	CL = 15pF	-	1.0	Ms
CL1-out propagation delay time	tPD2		-	1.0	
Disp offB-out propagation delay time	tPD3		-	1.0	

8.5.3 Segment driver application timing

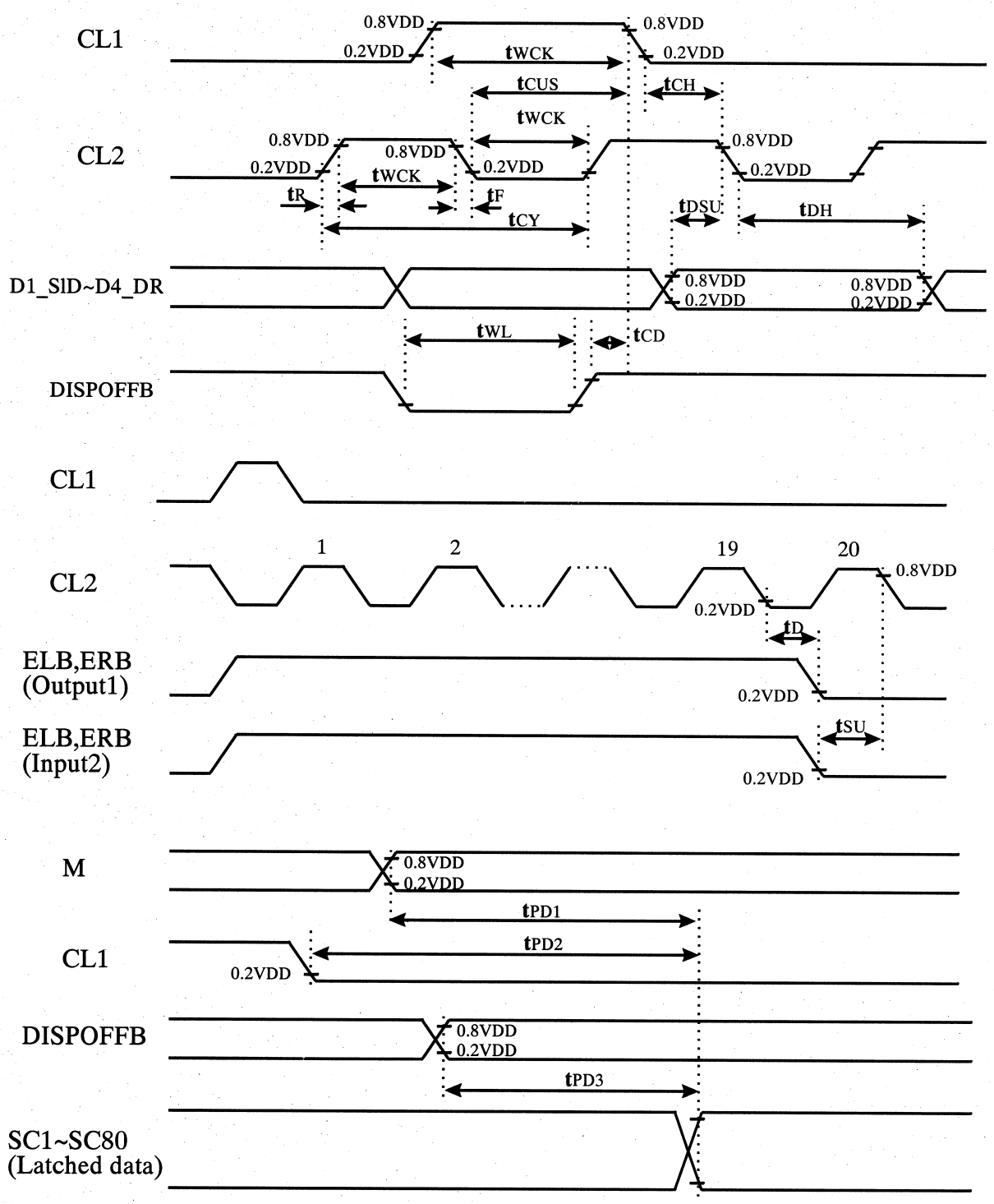

8.5.4 Common driver application timing

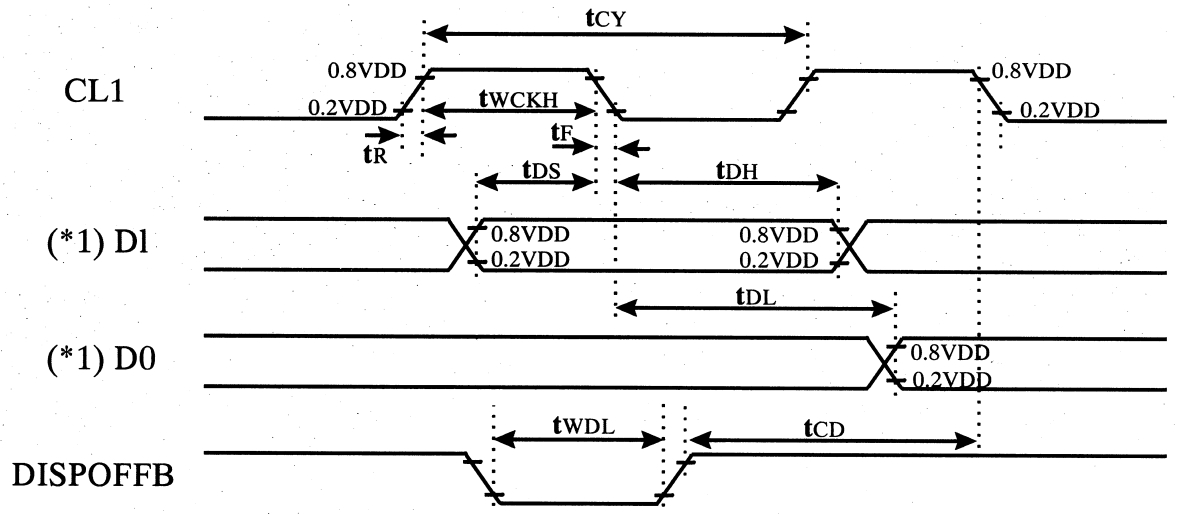

(*1) When signal-type interface mode

Dl => D2_DL(SHL="L"), D4_DR(SHL="H")

D0=> D4_DR(SHL="L"), D2_DL(SHL="H")

When dual-type interface mode

Dl => D2_DL and D3_DM(SHL="L"), D4_DR and D3_DM(SHL="H")

D0=> D4_DR(SHL="L"), D2_DL(SHL="H")

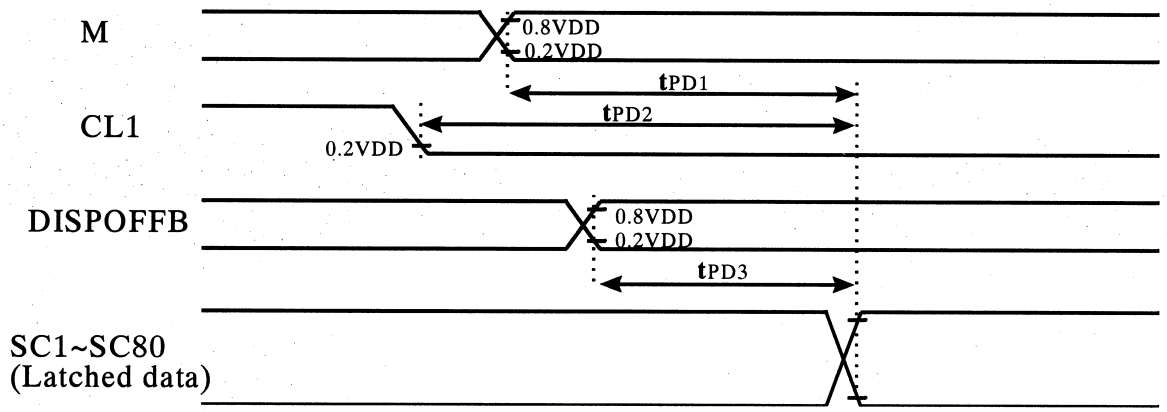

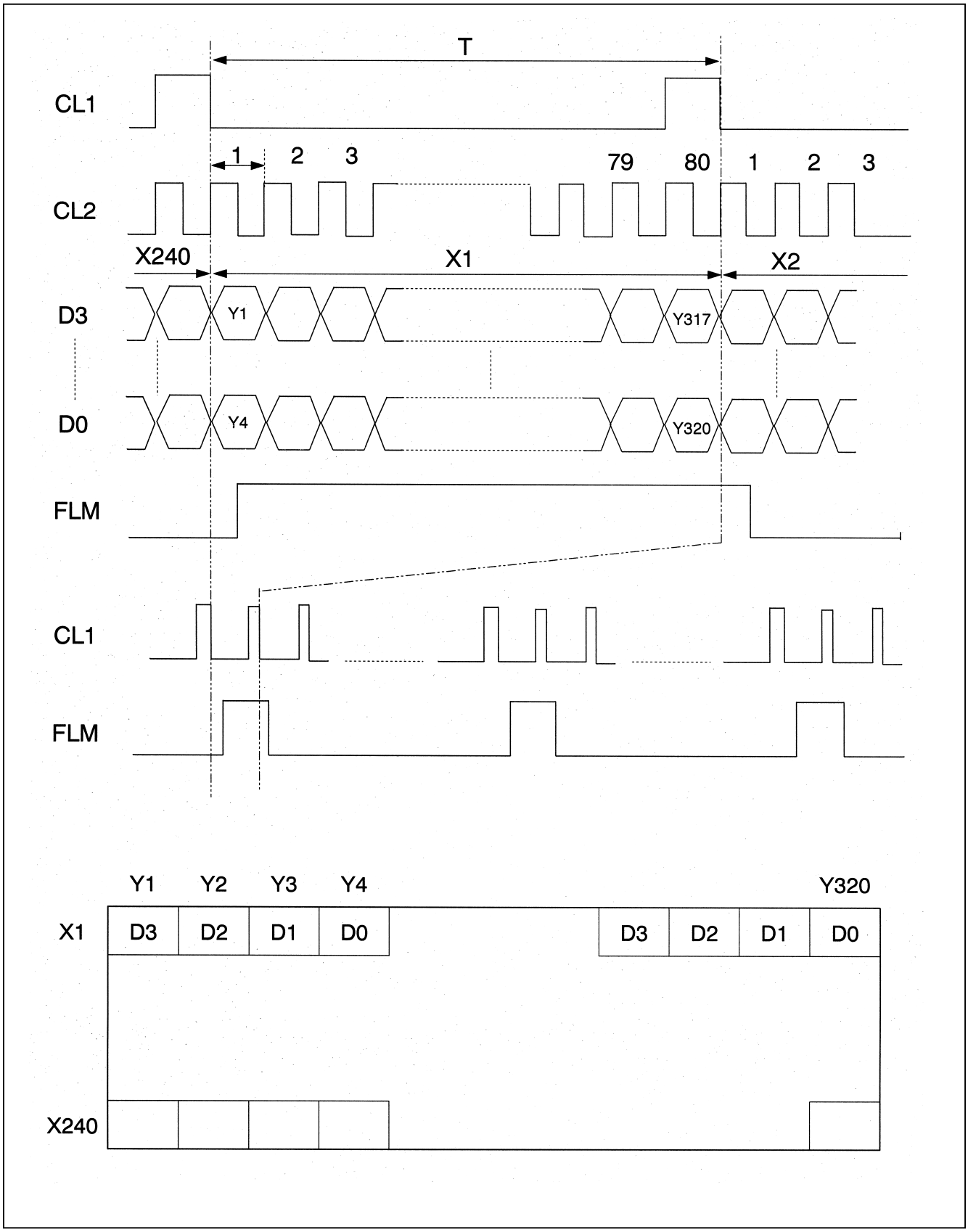
T
CL1
1
2
3
79
80
1
2
3
CL2
X240
X1
X2
D3
Y1
Y317
D0
Y4
Y320
FLM
CL1
FLM
Y1
Y2
Y3
Y4
Y320
X1
D3
D2
D1
D0
D3
D2
D1
D0
X240

8.6 Voltage supply and operational precaution

Follow the power on/off sequence shown in Fig. 8-3 to prevent latch-up or DC operation of the LCD panel.

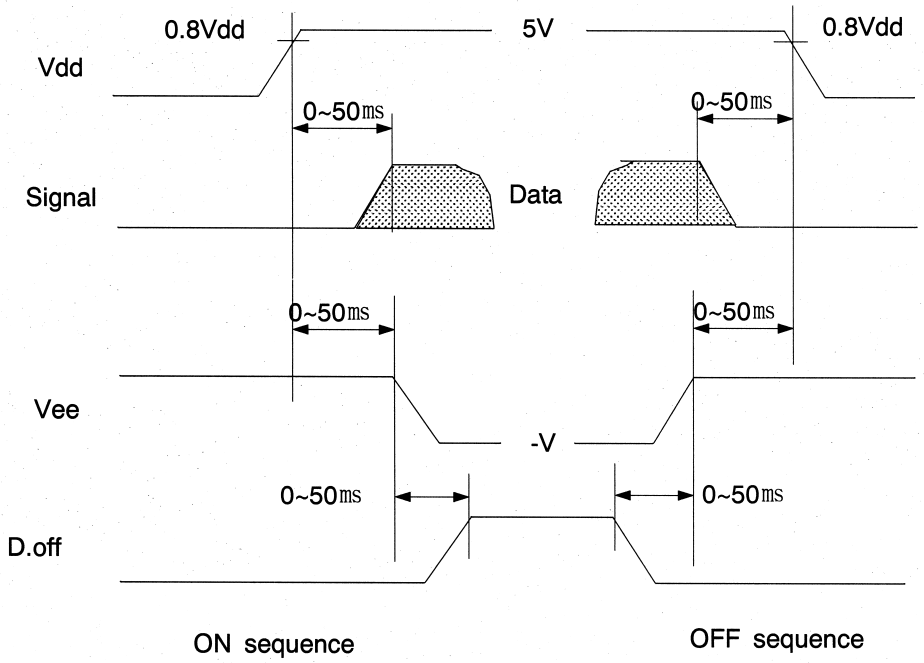

Fig8-3. Power ON/OFF sequence

9. UNIT DRIVING METHOD

9.1 Circuit configuration

Fig. 8-1 shows the block diagram of the unit circuitry.

9.2 Input data and control signal

The LCD driver is 80bits LSI, consisting of shift registers, latch circuits and LCD driver circuits.
Display data, which are externally divided into data for each row (320 dots) will be sequentially transferred in the form of 4-bits parallel data through shift registers by clock signal CL2 from the left top of the display face.
When data of one row (320 dots) have been input, they will be latched in the form of parallel data for 320 lines of signal electrodes by latch signal CL1.

Then the corresponding drive signal will be transmitted to the 320 lines of column electrodes of the LCD panel by the LCD drive circuits.
At this time, scan start-up signal FLM has been transferred from the scan signal driver to the 1st row of scan electrodes, and the contents of the data signals are displayed on the 1st rows of the display face according to the combinations of voltages applied to the scan and signal electrodes of the LCD.
While the 1st rows of data are being displayed, the 2nd rows of data are entered. When 320 dots of data have been transferred, then latched on the falling edge of CL1 clock.
The display face procedes to the 2nd rows of display.
Such data input will be repeated up to 240th row of each display segment, from upper to lower rows. To complete one frame of display by time sharing method.
Then data input proceeds to next display face. Scan start-up signal FLM generates scan signal to drive horizontal electrodes.
The unit shall be driven at the speed 70-80Hz/frame to avoid flickering.
Since DC voltage, if applied to LCD panel, causes chemical reaction which will deteriorate LCD, drive waveform shall be inverted at every display frame to prevent the generation of such DC voltage.
Control signal M plays such role.
Because of the characteristics of the CMOS driver LSI. the power consumption of the unit goes up as operating frequency CL2 increases.

10. QUALITY LEVEL

10.1 Inspection conditions

10.1.1 The environmental conditions for inspection shall be as follows.

Room temperature:	20 ± 3 °C
Humidity:	65 ± 20 % RH

10.1.2 The external visual inspection

The inspection shall be performed by using a single 20 W fluorescent lamp for illumination and the distance from LCD eyes of the inspector should be 30 cm or more.

10.1.3 Light method (1)

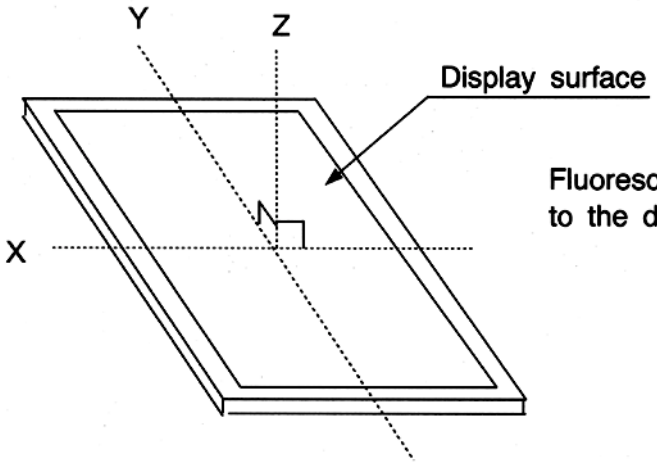

Fluorescent lamp set the perpendicular to the display surface.

Inspection distance and angle (2)

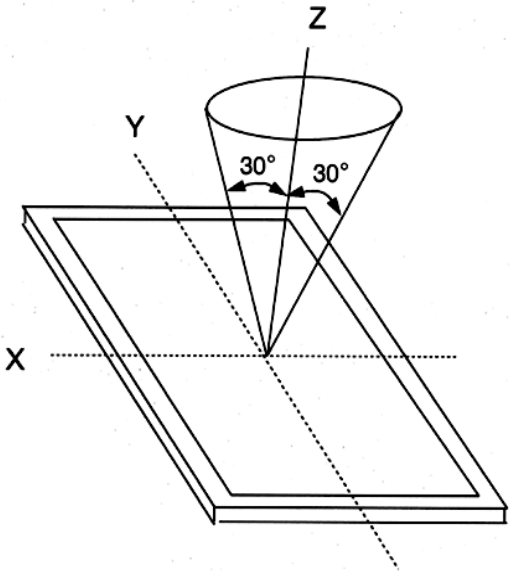

Inspection should be performed within ø (ø is usually 30°) from Z axis to each X and Y axis.
Inspection distance of any direction within ø must be kept 30± 5cm to the display surface.

10.2 Sampling procedures for each item´s acceptance level table.

Defect type	Sampling procedures	AQL
Major defect	MIL-STD-105D Inspection level I normal inspection single sample inspection	0.65
Minor defect	MIL-STD-105D Inspection Level I normal inspection single sample inspection	1.5

10.3 Classification of defects

10.3.1 Major defect

A major defect refers to a defect which is not considered to substantially degrade usability for product applications.

10.3.2 Minor defect

A minor defect referes to a defect which is not considered to substantially degrade product application or a defect, which deviates from existing standards almost unrelated to the effective use of the product or it´s operation.

10.4 Inspection standards

10.4.1 Criterion for black/white spot or line

Item	Criterion for defects
Black/White spots (I) Black/White lines (I)	Spots or lines appear dark or white in display patterns and remain unvaried in terms of size and shade regardless of the LCD operating voltage.
Black/White spots (II) Black/White lines (II)	Spots or lines appear dark or white in display patterns and vary in terms of size and shade with the LCD operating voltage.

Note: All of electrical defect must be judged on the state of optimum voltage that having a best contrast.

10.4.2 Inspection standards

Item	Criterion for defects	Defect type
1) Non display	No non display allowed	Major
2) Irregular operating	No irregular operatings allowed	Major
3) Short	No shorts allowed	Major
4) Open	Any segments or common patterns that don´t activate are rejectable	Major
5) Black/White spot (I)	Size Ø (mm) / Acceptable number Ø < 0.15 / Ignore (note) 0.15 < Ø < 0.25 / 4 0.25 < Ø < 0.30 / 2 0.30 < Ø / 0	Minor
6) Black/White line (I)	Length (mm) / Width (mm) / Acceptable number 10 < L / 0.03 < W < 0.04 / 5 5.0 < L < 10 / 0.04 < W < 0.06 / 3 1.0 < L < 5.0 / 0.06 < W < 0.07 / 2 L <1.0 / 0.07 < W < 0.09 / 1 Note: Defects seperate at interval if 30 mm each other	Minor
7) Black/White spot (II)	Size Ø (mm) / Acceptable number Ø < 0.30 / Ignore (note) 0.30 < Ø < 0.50 / 5 0.50 < Ø < 1.00 / 3 1.00 < Ø / 0	Minor
8) Black/White line (II)	Length (mm) / Width (mm) / Acceptable number 20 < L / 0.05 < W < 0.07 / 5 10 < L < 20 / 0.07 < W < 0.09 / 3 5.0 < L < 10 / 0.09 < W < 0.10 / 2 L < 5.0 / 0.10 < W < 0.15 / 1 Note: Defects seperate at interval if 30 mm each other	Minor
9) Back Light	1) No Lighting is rejectable 2) Flickering and abnormal lighting are rejectable Note: In case of the module with back light (E/L or LED or CCFT)	Major

Item	Criterion for defects	Defect type
10) Display pattern	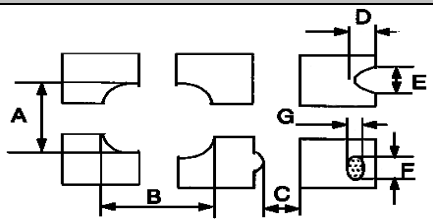 [Unit: mm] $\frac{A+B}{2} \le 0.30$; $0 < C$; $\frac{D+E}{2} \le 0.25$; $\frac{F+G}{2} \le 0.25$ Note 1: Acceptable up to 3 demages Note 2: NG if there´re two or more pinholes per digit	Minor
11) Blemish & Foreign matters size: Ø = (A+B)/2 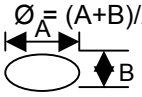	Size Ø (mm) / Acceptable number Ø < 0.15 : Ignore 0.15 < Ø < 0.20 : 3 0.20 < Ø < 0.30 : 2 0.30 < Ø : 0	Minor
12) Scratch on polarizer	Width (mm) / Length (mm) / Acceptable number W < 0.03 : Ignore : 3 0.03 < W < 0.06 : L < 5.0 : 3 0.06 < W < 0.08 : L < 3.0 : 2 0.08 < W : Note : Note Note: Applying to spec. of blemish	Minor
13) Bubble in polarizer	Size Ø (mm) / Acceptable number Ø < 0.20 : Ignore 0.20 < Ø < 0.50 : 3 0.50 < Ø < 0.80 : 2 0.80 < Ø : 0	Minor
14) Stains on LCD panel surface	Stains which cannot be removed even when wiped lightly with a soft cloth or similar cleaning too are rejectable	Minor
15) Rust in Bezel	Rust which is visible in the bezel is rejectable	Minor
16) Defect of land surface contact (poor soldering)	Evident crevices which is visible are rejectable	Minor
17) Parts mounting	(1) Failure to mount parts (2) Parts not in the specifications are mounted (3) Polarity, for example, is reversed	Major
18) Parts alignment	(1) LSI , IC lead is more then 50% beyond pad outline. (2) Chip component is off center and more then 50% of the leads is off th pad outline.	Minor
19) Conductive foreign matter (Solder ball, Solder chips)	(1) 0.45 < Ø, N ≥ 1 (2) 0.30 < Ø 0.45 , N ≥ 1 Ø: Average diameter of solder ball (unit: mm) (3) 0.50 < L, N ≥ 1 L: Average length of solder chip (unit: mm)	Major Minor Minor
20) Faulty PWB correction	(1) Due to PWD copper foil pattern burnout, the pattern is connected, using a jumper wire for repair; 2 or more places are corrected per PWB. (2) Short circuited part is cut, and no resist coating has been performed.	Minor

11. RELIABILITY

11.1 Items of reliability

All test results of items should be judged after 1 hours recovery time at room temperature.

Item	Condition	Criterion
1) High temperature operating	50 °C, 96 hrs	• After testing, cosmetic defects should not happen • Contrast ratio should not happen lower then 10% of initial value • Total current consumption should be below double of initial value
2) Low temperature operating	0 °C, 96 hrs	
3) Humidity	40 °C, 90% RH, 96 hrs	
4) High temperature storage	60 °C, 120 hrs	
5) Low temperature storage	-20 °C, 120 hrs	
6) Thermal shock storage	25 °C 5(min) -20 °C 30(min) 25 °C 5(min) 60 °C 30(min) 5 cycle	
7) Vibration	10 ~ 55 ~ 10hz amplitude: 1.5 mm 2 hrs for each direction (X,Y,Z)	Not allowed cosmetic and electical defects. Note: Test will be performed at state of carton box, not each of the modules
8) Static Electricity	150pF 330Ω ±8kV 10 times air discharge	• After testing, cosmetic and electrical defects should not happen • Total current consumption should be below double of initial value

Note: In case of malfunction defect caused by ESD damage, if it would be recovered to normal state after reseting, it would be judged as a good part.

12. HANDELING PERCAUTIONS

12.1 Mounting method

The LCD panel of Data Display LCD module consists of two this glass plates with polarizes which easily get damaged.

12.2 Caution of LCD handling and cleaning

When cleaning the display surface, use soft cloth with solvent [recommended below] and wipe lightly

- Isopropyl alcohol
- Ethyl alcohol
- Trichlorotriflorothane

Do not wipe the display surface with dry or hard materials that wil damage the ITO patterns. Do not use following solvent on the pad or prevent it from being contaminated:

- HCFC
- Soldering flux
- Chlorine (Cl), Salfur(S)
- Spittle, Fingerprint

If goods were sent without being silicon coated on the pad, ITO patterns could be damaged due to the corrosion as time goes on.

Data Display would like to propose that the Customer condict the silicon coating unless the goods supplied without Silicon coating.

12.3 Caution against static charge

The LCD module use C-MOS LSI drivers, so we recommended that you, connect any unused input terminal to Vdd or Vss, do not input any signals before power is turned on, and ground your body, work/assembly areas, assembly equipment to protect against static electicity.

12.4 Packing

- Module employ LCD elements, and must be treated as such.
  Avoid intense shock and falls from a height.
- To prevent modules from degradiation, do not operate or store them exposed direct to sunshine or higher temperature/humidity.

12.5 Caution for operation

- It is an indispendable condition to drive LCD´s within the specified voltage limit since the higher voltage then the limit cause the shorter LCD life.
  An electrochemical reaction due to direct current drive should be avoided.
- Response time will be extremely delayed at lower temperature then the operating temperature range and on the other hand at higher temperature LCD´s show dark in them.
  However those phenomena do not mean malfunction or out of order with LCD´s, which will come back in the specified operating temperature.
- If the display area is pushed hard during operation, some font will be abnormally displayed but it resumes normal condition after turning off once.
- A slight dew despositing on terminals is a cause for electro-chemical reaction resulting in terminal open circuit.
  Usage under the relative condition of 40°C, 50% RH or less is required.

12.6 Storage

In the case of storing for a long period of time [for instance, for years] for the purpose or replacement use, the following ways are recommended.

- Storage in a polyethylene bag with the opening sealed so as not to enter fresh air outside in it and with no desiccant.
- Placing in a dark place where neither exposure to direct sunlight nor light is, keeping the storage temperature.
- Storing with no touch on polarizer surface by anything else.
  [It´s recommended to store them as they have been contained in the inner container at the time of delivery from us.]

12.7 Safety

- It is recommended to crash damaged or unnecessary LCD´s into pieces and wash off liquid crystal by either of solvents such as acetone and ethanol, which should be burned up later.
- When any liquid leaked out of a damaged glass cell comes in contact with your hands, please wash it off well with soap and water.

13. PRECAUTION FOR USE

A limit sample should be provided by the both parties on an occasion when the both parties agreed its necessity.
Judgement by a limit sample shall take effect after the limit sample has been established and confirmed by the both parties.

On the following occations, the handling of problem should be decided through discussion and agreement between responsible of both parties.

- When a question is arisen in this specification.
- When a new problem is arisen which os not specified in this specifications.
- When an inspection specifications change or operating condition change in customer is reported to Data Display, and some problem is arisen in this specification due to the change
- When a new problem is arisen at the customer´s operating set for sample evaluation in the customer site.

14. DIMENSIONAL OUT LINE

Refere to the attached drawing.

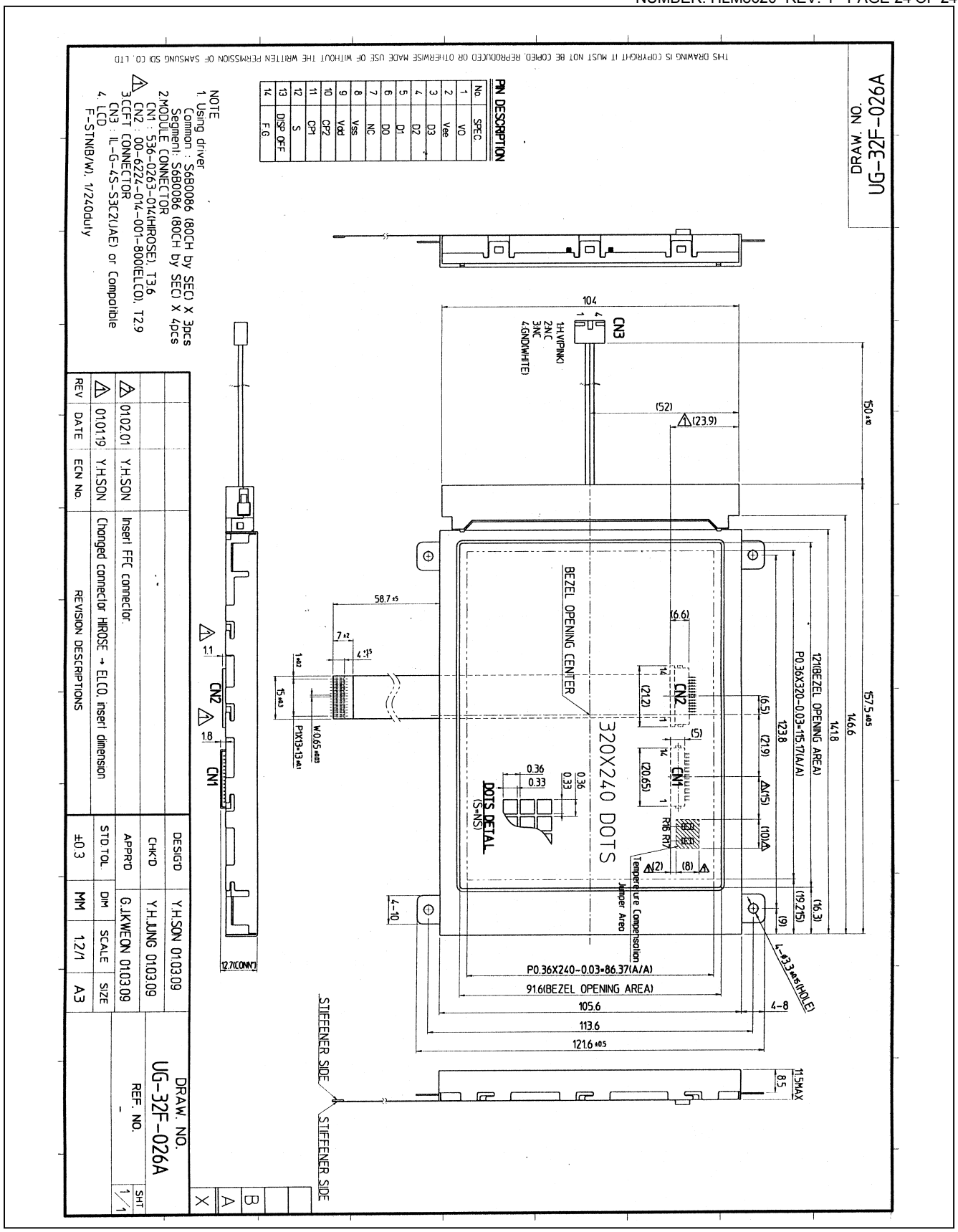
DRAW. NO.
UG-32F-026A
PIN DESCRIPTION
No. SPEC.
1 V0
2 Vee
3 D3
4 D2
5 D1
6 D0
7 NC
8 Vss
9 Vdd
10 CP2
11 CP1
12 S
13 DISP OFF
14 F.G
NOTE
1. Using driver
Common : S6B0086 (80CH by SEC) X 3pcs
Segment: S6B0086 (80CH by SEC) X 4pcs
2. MODULE CONNECTOR
CN1 : 536-0263-014(HIROSE), T3.6
CN2 : 00-6224-014-001-800(ELCO), T2.9
3. CFT CONNECTOR
CN3 : IL-G-4S-S3C2(JAE) or Compatible
4. LCD
F-STN(B/W), 1/240duty
CN3
1:H.V(PINK)
2:NC
3:NC
4:GND(WHITE)
BEZEL OPENING CENTER
320X240 DOTS
DOTS DETAIL
(S=NS)
Temperature Compensation Jumper Area
P0.36X240-0.03=86.37(A/A)
91.6(BEZEL OPENING AREA)
105.6
113.6
121.6
12.7(BEZEL OPENING AREA)
P0.36X320-0.03=115.17(A/A)
146.6
157.5
150
104
STIFFENER SIDE
11.5MAX
4-ø3.3±0.1(HOLE)
CN1
CN2
12.7(CONN)
REV DATE ECN No. REVISION DESCRIPTIONS
01 01.02.01 Y.H.SON Insert FFC connector.
00 01.01.19 Y.H.SON Changed connector HIROSE → ELCO, insert dimension
DESIG'D Y.H.SON 01.03.09
CHK'D Y.H.JUNG 01.03.09
APPR'D G.J.KWEON 01.03.09
STD TOL. ±0.3
DIM MM
SCALE 1:2/1
SIZE A3
DRAW. NO. UG-32F-026A
REF. NO. -
SHT 1/1
THIS DRAWING IS COPYRIGHT IT MUST NOT BE COPIED, REPRODUCED OR OTHERWISE MADE USE OF WITHOUT THE WRITTEN PERMISSION OF SAMSUNG SDI CO. LTD