HEIDENHAIN
DR. JOHANNES HEIDENHAIN GmbH
D-8225 Traunreut · ☎ (08669) 31-0

Kundendienst

* SERVICE MANUAL *

TNC 351/355

Subject to Change/Further Developments
DR. JOHANNES HEIDENHAIN is constantly working on technically improving its units. It is therefore possible that details of your Control may differ slightly from those described herein. If that is the case please order a suitably revised issue of the Service Manual.

Issue: 06/92

Contents

Contents

1. How to use the TNC 351/355 Service Manual

The TNC 351/355 Service Manual can be used for fault diagnosis, fault localisation and elimination of a TNC-controlled machine tool.

In order to determine the fault condition on an NC-machine, a fundamental knowledge of the machine and the servo amplifiers is necessary, as well as a knowledge of their interaction with the Control and measuring system. In addition, improper use of the Control, such as incorrect NC-programming or incorrect selection of machine parameters can lead to the occurrence of fault conditions. Further information in this respect can be found in the:

.Machine Documentation of the Manufacturer
.Service Manual
.Handbook for the Machine Manufacturer

The handbook for the machine manufacturer is not enclosed with every control as the service manual.
It is generally only supplied to the machine manufacturer and is submitted to a "change service" by HEIDENHAIN, Traunreut. It is therefore absolutely necessary to consult the machine manufacturer in the case of errors concerning the machine parameters or the interface of the control. Support can also be obtained by the HEDIENHAIN service, Traunreut or by HEIDENHAIN agencies.
Telephone numbers or addresses and telex/telefax connections can be found on the inner side of the cover page and on the rear side of the service manual.

2. Error Messages

The TNC 351/355 contains a comprehensive, integrated supervision system to avoid input or operating errors, to localize and diagnose faults of technical defects of the whole plant (TNC, measuring system, machine, cabling etc.).
The supervision system is a fix component of the TNC-hardware and software and is always operative when the control is switched on. The recognition of a technical defect or an operating error is displayed in plain language on the screen.

Insignificant error messages can be erased with the CE-key.

The error messages listed are described more precisely in the following instructions:

- Service Manual, section:
- TNC 355 Operating Manual
- Handbook for the machine manufacturer, resp. machine documentation of the manufacturer
- FE 401 Operating Instructions

	BA FE	HM/ MD	OM	SI
ADDRESS LETTER ALREADY ASSIGNED			x	
SELECTED BLOCK NOT ADDRESSED			x	
TOUCH POINT INACCESSIBLE			x	10.2
ARITHMETICAL ERROR			x	
PATH OFFSET WRONGLY ENDED				
PATH OFFSET WRONGLY STARTED			x	
OPERATION PARAMETERS ERASED		x		2.1
CC-BLOCK MISSING			x	
CYCL INCOMPLETE			x	
DATA MEDIUM MISSING				11.6
DATA MEDIUM EMPTY				11.6
DATA MEDIUM WRITE-PROTECTED				11.6
PROGRAM INCOMPLETE				11.6
BLK FORM DEFINITION INCORRECT			x	
AXIS DOUBLE PROGRAMMED			x	
PLANE WRONGLY DEFINED			x	
FURTHER PROGRAM ENTRY IMPOSSIBLE			x	
ENTRY VALUE INCORRECT			x	
LIMIT SWITCH X+		x		2.1
LIMIT SWITCH X-		x		2.1
LIMIT SWITCH Y+		x		2.1
LIMIT SWITCH Y-		x		2.1
LIMIT SWITCH Z+		x		2.1
LIMIT SWITCH Z-		x		2.1
LIMIT SWITCH AXIS IV +		x		2.1
LIMIT SWITCH AXIS IV-		x		2.1
LIMIT SWITCH AXIS V+		x		2.1
LIMIT SWITCH AXIS V-		x		2.1

	BA FE	HM/ MD	OM	SI
ERR: 001	x			11.6
ERR: 002	x			11.6
ERR: 003	x			11.6
ERR: 004	x			11.6
ERR: 010	x			11.6
ERR: 011	x			11.6
ERR: 012	x			11.6
ERR: 013	x			11.6
ERR: 014	x			11.6
ERR: 100	x			11.6
ERR: 102	x			11.6
ERR: 103	x			11.6
ERR: 104	x			11.6
ERR: 105	x			11.6
ERR: 106	x			11.6
ERR: 107	x			11.6
ERR: 108	x			11.6
EXT. IN-/OUTPUT NOT READY				11.6
EMERGENCY-STOP		x		14.3
WRONG AXIS PROGRAMMED			x	
WRONG OPERATING MODE				11.6
WRONG RPM		x		
WRONG POCKET NR.			x	
CHAMFER NOT PERMITTED			x	
WRONG PROGRAM DATA			x	11.6
PROTECTED PGM			x	
G-CODE GROUP ALREADY ASSIGNED			x	
NO EDITING OF RUNNING PROGRAM			x	
CONTOUR PROGRAMMING ERROR			x	
CONTOUR CANNOT BE PROCESSED			x	
CONTOUR TOO COMPLEX			x	
CIRCLE END POS. INCORRECT			x	
CIRCLE CENTRE UNDEFINED			x	
SHORT CURRENT INTERRUPTION				2.1
LABEL NUMBER ALLOCATED			x	
LABEL NUMBER NOT ALLOCATED			x	
MACHINE PARAMETER INCOMPLETE				12.2
N-CODE MISSING			x	
ILLEGAL NC-BLOCK			x	
SLOT WIDTH TOO LARGE			x	
PGM-SECTION CANNOT BE SHOWN			x	
PGM XXXXXXXX MISSING			x	
POCKET 0 UNDEFINED			x	
PLC: ERROR 0		x		
.		.		
.		.		
.		.		
PLC: ERROR 99		x		
POSITIONING ERROR		x		2.1
PROGRAM NUMBER ALLOCATED			x	
PROGRAM NUMBER UNAVAILABLE			x	
PROGRAM MEMORY EXCEEDED			x	

	BA FE	HM/ MD	OM	SI
EXCHANGE BUFFER BATTERY			x	5.5
RADIUS COMP. UNDEFINED			x	
ROUNDING-OFF UNDEFINED			x	
ROUNDING-OFF NOT PERMITTED			x	
ROUNDING RADIUS TOO LARGE			x	
BLOCK FORMAT INCORRECT			x	
BLOCK NUMBER ALREADY ALLOCATED			x	
BLOCK TOO LONG			x	
SPINDLE ROTATES MISSING			x	
JUMP TO LABEL Ø NOT PERMITTED			x	
RELAY TOT. DC VOLTAGE MISSING		x		14.3
POWER INTERRUPTED		x		14.3
SEARCH ADDRESS MISSING			x	
KEY NON FUNCTIONAL		x		
EXCHANGE TOUCH PROBE BATTERY			x	10.2
STYLUS ALREADY IN CONTACT			x	10.2
PROBE SYSTEM NOT READY			x	10.2
TOOL CALL MISSING			x	
TOOL DEF MISSING			x	
TOOL DEF Ø NOT PERMITTED			x	
ILLEGAL G-CODE			x	
PROGRAM-START UNDEFINED			x	
WRONG SIGN PROGRAMMED			x	
MIRROR IMAGE ON TOOL AXIS			x	
TOOL NUMBER ALLOCATED			x	
TOOL RADIUS TOO LARGE			x	
ANGLE REFERENCE MISSING			x	
EXCESSIVE SUBPROGRAMMING			x	
TOO MANY USER PARAMETER		x		
EXCESSIVE SUBCONTOURS			x	
TWO TOOL DEF XXX WITH PGM CALL			x	
3D-INTERPOLATION NOT PERMITTED			x	

2.1 Possible Causes for Error Messages

OPERATING PARAMETERS ERASED

- The machine parameters are principally erased with new units and exchange units.
- Software exchange with different software updates
- Buffer batteries and rechargeable NiCd batteries defective
- RAM-error on PROCESSOR Board

LIMIT SWITCH X+ (e.g.)

- "Manual" operating mode
  When traversing with directional keys the adjusted **software limit switch** or the **additional limitation** in the auxiliary operating modes was reached.
- "Automatic" operating mode
  The **positioning path calculated** with the current block lies **out of** the **software limit switch** or **out of** the **additional limitation.** The positioning is not carried out.

  Machine parameters for software limit switches

MP 44	MP 45	MP 46	MP 47	MP 48	MP 49	MP 50	MP 51	MP 325	MP 326
X+	X-	Y+	Y-	Z+	Z-	IV+	IV-	V+	V-

SHORT CURRENT INTERRUPTION

- Short collapse of supply to TNC (approx. 120 - 150 ms)
- Important machine parameters were changed; e.g. MP 12, MP 20, MP 60, MP 72, MP 90, MP 170, MP 184, MP 217, MP 236 etc.

POSITIONING ERROR

- The position supervision entered in machine parameter 56 or 175 is effective (control approach behaviour of axis, optimize again, if required).

3. Fault Messages and their Causes

The integrated supervision system differentiates between insignificant and significant errors. Significant errors are displayed with a **flashing display** (e.g. erroneous functions of linear transducers, drives and errors in data processing).
The control opens the contact **"Control ready"** in the case of significant errors. This results in a EMERGENCY-STOP of the machine.
The state "EMERGENCY-STOP" can only be eliminated again by switching off the main switch provided that the error cause was eliminated before.

Flashing display	Possible fault cause
FAULTY DATA PROCESSING Ø	PROCESSOR Board
" " 1	" "
" " 2	" "
" " 3	" "
" " 4	" "
" " A	" "
" " B	CLP PROCESSOR Board
" " C	" "
" " D	" "
" " E	PROCESSOR or CLP PROCESSOR Board
" " F	" " " " "
" " G	CLP PROCESSOR Board
" " H	PROCESSOR Board
" " I	" "
" " K	" "
" " L	Machine Parameter *

* Enable (selection) of a function via machine parameters which are not integrated in the software.

If the error message "FAULTY DATA PROCESSING " (= identification letter, see above!) occurs repeatedly return the **compl. LOGIC UNIT** to HEIDENHAIN for repair. **Indicate** also the **error message and the identification letter.**

Flashing display	Fault cause
ERROR IN PLC-PROGRAM	Fault with non-erasable marker (see also PLC-Description)
" " " A	Start Key or incremental positioning X+
" " " B	Rapid Traverse Key or incremental positioning X-
" " " C	Direction Latch Key or incremental positioning Y+
" " " D	Feed Release or incremental positioning Y-
" " " E	Start PLC Positioning X-axis or incremental positioning Z+
" " " F	Start PLC Positioning Y-axis or incremental positioning Z-
" " " G	Start PLC Positioning Z-axis or incremental positioning IV+
" " " H	Start PLC Positioning IV-axis or incremental positioning IV-
" " " I	Directional key X+ or incremental positioning V+
" " " J	Directional key X- or incremental positioning V-
" " " K	Directional key Y+ or start-PLC-positioning axis V
" " " L	Directional key Y-
" " " M	Directional key Z+ or directional key V+
" " " N	Directional key Z- or directional key V-
" " " O	Directional key IV+ or supplementary axis to be changed to M2590 and M2591
" " " P	Directional Key IV- or Start PLC Positioning S-axis
" " " Q	Non-defined macro called up via PLC markers

Possible location of fault:
PLC Program, PROCESSOR Board, PL 300 (PLC POWER I/O Board Assembly), external keys, switch or wiring

Flashing display	Fault cause
GROSS POSITIONING ERROR A	**Position (trailing error) supervision** - Speed precontrol operation: Exceeding position supervision determined by machine parameter 57. - Trailing error operation: Exceeding trailing error supervision determined by machine parameter 174.
GROSS POSITIONING ERROR B	**Supervision of analog voltage limit** - The nominal value of the voltage calculated by the control reached the ± 10 volt limit (only with speed precontrol).
GROSS POSITIONING ERROR C	**Movement supervision** - The voltage difference calculated by the control reached the limit programmed in machine parameter 234.
GROSS POSITIONING ERROR D	**Standstill supervision** - The position deviation from the nominal position of an axis at standstill is greater than programmed in machine parameter 169. - When positioning beyond the target point programmed the value of the nominal position is greater than programmed in machine parameter 169.
GROSS POSITIONING ERROR E	**Supervision of offset voltage** - The offset voltage limit of 100 mV was reached with an automatic offset adjustment by machine parameter 252.

Possible location of error with the error message "GROSS POSITIONING ERROR A/B/C/D/E": With "Gross Positioning Error" the error can be due to any component of the closed loop.

e.g.:
- control error (e.g. CLP PROCESSOR Board)
- excessive offset voltage at servo amplifier
- wrong speed adjustment at servo amplifier
- supervision of servo amplifier is effective (e.g. current supervision)
- electrical defect of servo amplifier
- motor defective, tacho, measuring system or cabling
- mechanical defect (bearing, spindle or guidance error)
- excessive mechanical forces on drive

Flashing display	Fault cause
TRANSDUCER X DEFECTIVE A " Y " A " Z " A " IV " A " V " A	Fault code: A = signal amplitude fault B = signal frequency fault - Measuring system not connected - Cable damaged - Glass scale dirty or damaged - Scanning head damaged - Measuring system supervision defective (CLP PROCESSOR Board)
TRANSDUCER X DEFECTIVE B " Y " B " Z " B " IV " B " V " B	Supervision of measuring systems, see section 8.3
WRONG REFERENCE POINT	Wrong distance of reference mark with transducers having distance-coded reference marks (counting error caused by measuring system or LOGIC Unit).
TNC OPERATING TEMP. EXCEEDED	Temperature in the inner side of the LOGIC Unit greater than +65°C.
EMERGENCY STOP DEFECTIVE	- Fault with the supervision routine for the output "Control Ready" when switching on machine (see section 14.3).
EMERGENCY STOP PLC	The error message only appears if marker 2815 is set **without** additional markers (M2924 - M3023).
PLC: ERROR 00 1)	Marker 2924
to	to — and marker 2815 was set
PLC: ERROR 99 1)	Marker 3023

1) Instead of PLC: ERROR 00 ... 99, also another dialog may appear with a customized PLC-program. Detailled information can be obtained from the machine manufacturer.

Flashing display	Fault cause	Possible fault location
	X X Ø Ø CRC-checksum * └┬┘ └┬┘ └ location of fault └ correct checksum	
CHECK-SUM ERROR XXØØ	CRC-checksum error with EPROM 3	PROCESSOR Board
" " XX1Ø	" " 4	" "
" " XX2Ø	" " 5	" "
" " XX3Ø	" " 6	" "
" " XX31	" " 6	" "
" " XX4Ø	" " 2	CLP PROCESSOR Board
" " XX42	" " 2	" "
" " XX41	" RAM	" "
" " XX43	" "	" "
" " XXE9	" "	PROCESSOR Board
" " XXEA	" "	" "

* CRC = Cyclic Redundancy Check (cyclic block check when data is transmitted)

If the error message "CHECKSUM ERROR XXXX" occurs repeatedly return the **compl. LOGIC UNIT** for repair and **indicate the checksum error.**

4. LOGIC Unit LE 351/355

Logic Unit without
PLC Power I/O Board Assembly (PL 300)

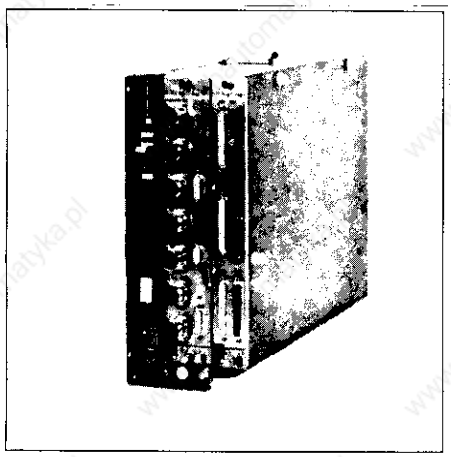

Logic Board with PLC Power
I/O Board Assembly (PL 300)

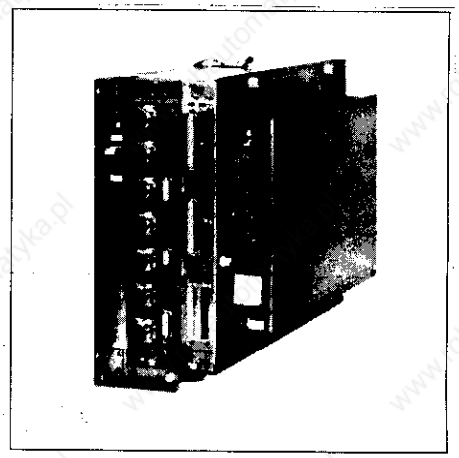

4.1 Designation of the LOGIC Unit

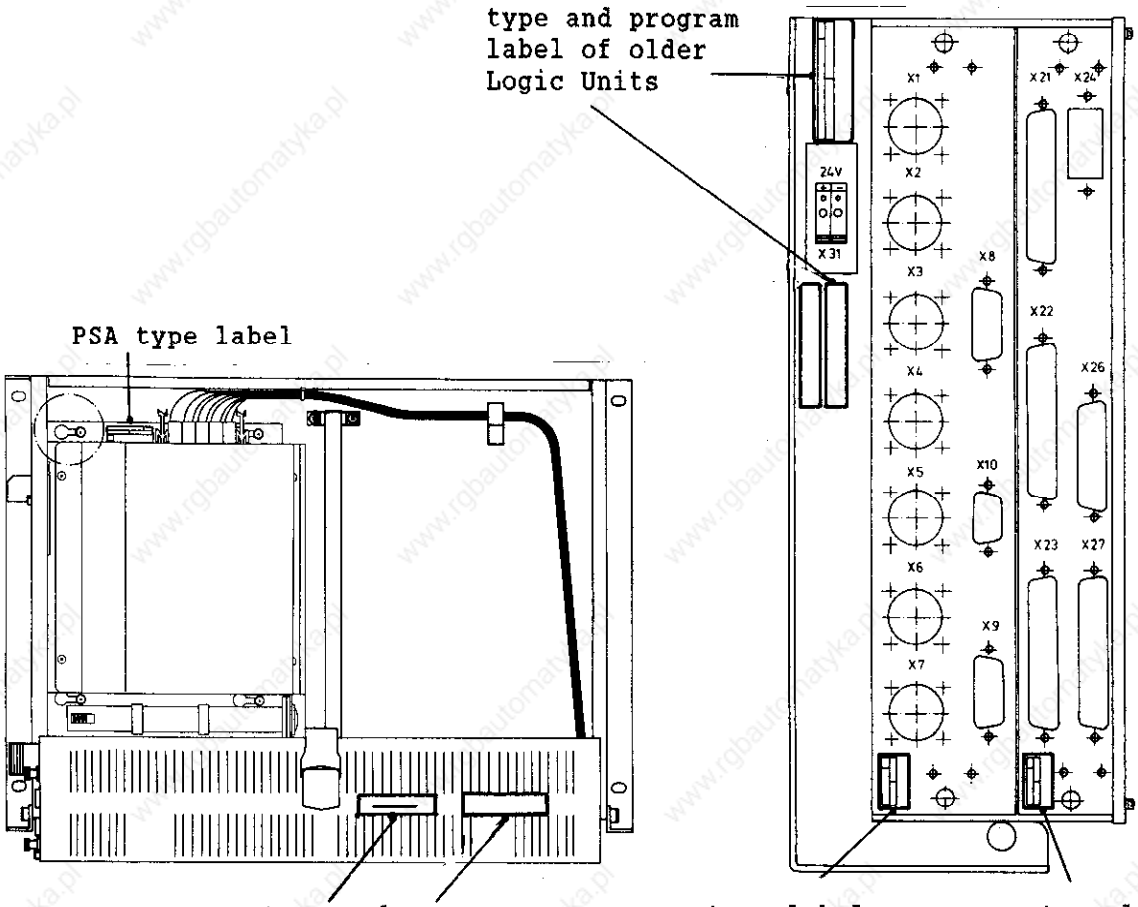

4.2 Hardware components of the LOGIC UNIT

The LOGIC UNIT consists of the following assemblies:

- POWER SUPPLY ASSEMBLY
- PLC PROCESSOR Board
- PROCESSOR Board
- PL 300 (= PLC-Power Supply Board, only with Q/W/S/Y-Version)

The following tables show the inserted assemblies for the various LOGIC UNITS.

4.2.1 TNC 355 Assembly Overview, new Hardware Version (connecting sockets marked with colours)

Logic Unit / Assembly	TNC 355 (IV) + S		TNC 355 (V) + S			
	LE 355 B/F 254 581 ..	LE 355 Q/W 254 582 ..	LE 355 C/G 254 819 ..	LE 355 S/Y 254 820 ..	LE 355 CR/GR 249 516 ..	LE 355 SR/YR 249 517 ..
PROCESSOR BOARD						
249 652 ..	x	x	x	x	x	x
CLP PROCESSOR BOARD						
249 663 ..			x	x		
249 820 ..					x	x
249 823 ..	x	x				
POWER SUPPLY ASSEMBLY						
236 484 07	x	x	x	x	x	x
PL 300						
237 659 ..		x		x		x

4.2.2 TNC 351/355 Assembly Overview, old Hardware Version

Logic Unit / Assemblies	TNC 351	CNC 332	TNC 355 (IV) + S		TNC 355 (V)		TNC 355 (V) + S	
	LE 351 B/F 243 992 ..	LE 355 /E 236 482 ..	LE 355 B/F 237 660 ..	LE 355 Q/W 238 324 ..	LE 355 B/F 242 408 ..	LE 355 Q/W 242 407 ..	LE 355 C/G 246 813 ..	LE 355 S/Y 248 055 ..
PROCESSOR BOARD								
235 635 ..		x						
237 930 ..	x		x	x	x	x	x	x
CLP PROCESSOR BOARD								
235 769 ..		x						
238 289 ..			x	x				
239 863 ..					x	x		
242 878 ..	x							
245 922 ..							x	x
POWER SUPPLY ASSEMBLY								
236 484 02		x	x	x	x	x		
" 04	x							
" 07		*	*	*			x	x
PL 300								
237 659 ..				x		x		x

x = from first delivery
* = from production code K7 (7/89)

4.3 LE 351/355 connector layout

4.3.1 Connector layout of LE 351/355 B/F/Q/W LOGIC UNITS

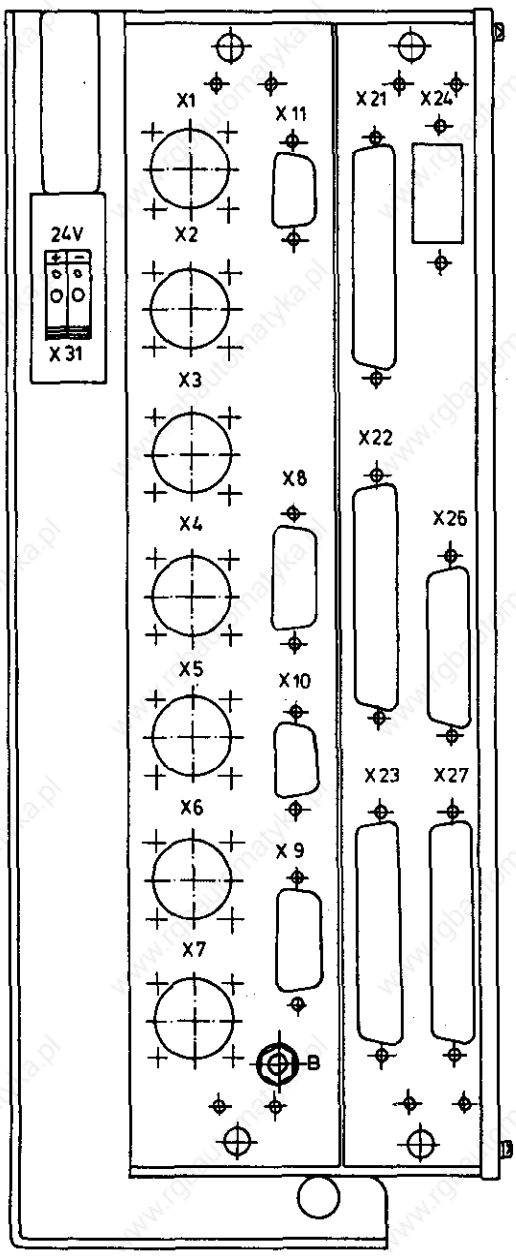

Closed loop:

		Color code 1)
X1	= Encoder 1	
X2	= Encoder 2	
X3	= Encoder 3	
X4	= Encoder 4	
X5	= Encoder 5	

Standard allocation (switchover via machine parameters 253 . . . 257)

X6	= Electronic handwheel HR 150/HR 250	
X7	= Touch probe system	
X8	= Nominal value output for X, Y, Z, IV, S (V)	Red
X9	= Visual display unit BE 412B	Blue
X10	= Reference pulse inhibitor	Yellow
X11	= Test I/O 1)	Red
S	= Signal ground	

Processor:

X21	= PLC-output	Red
X22	= PLC-input	Yellow
X23	= Keyboard unit TE 355	Blue
X24	= Power supply 24 V- for PLC	
X26	= Data interface RS-232-C/V.24	Red
X27	= Machine operating panel	Green

Power supply:

X31 = Power supply 24 V- for LE

1) only with Logic Units from 9/89

4.3.2 Connector layout of LE 355 C/G/S/Y LOGIC UNITS

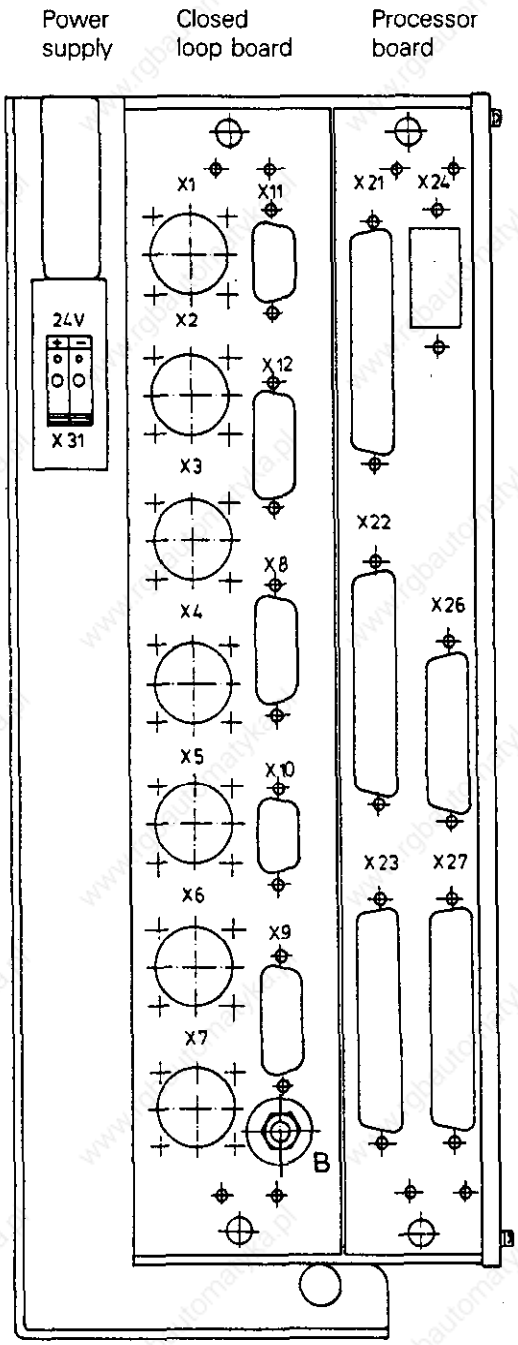

Closed loop:

		Color code 1)
X1	= Encoder 1	
X2	= Encoder 2	
X3	= Encoder 3	
X4	= Encoder 4	
X5	= Encoder 5	
X6	= Encoder S	
X7	= Electronic handwheel HR 150/HR 250	
X8	= Nominal value output for X, Y, Z, IV, V, S	Red
X9	= Visual display unit BE 412B	Blue
X10	= Reference pulse inhibitor	Yellow
X11	= Handwheel with axis selection keys 1)	Red
X12	= Touch probe system TS 120 (TS 111/511)	Yellow
B	= Operational ground	

Standard allocation (switchover via machine parameters 253 . . . 257)

Processor:

X21	= PLC-output	Red
X22	= PLC-input	Yellow
X23	= Keyboard unit TE 355	Blue
X24	= Power supply 24 V– for PLC	
X26	= Data interface RS-232-C/V.24	Red
X27	= Machine operating panel	Green

Power supply:

X31 = Power supply 24 V– for LE

1) only with Logic Units from 9/89

4.3.3 Connector layout of LE 355.R LOGIC UNITS

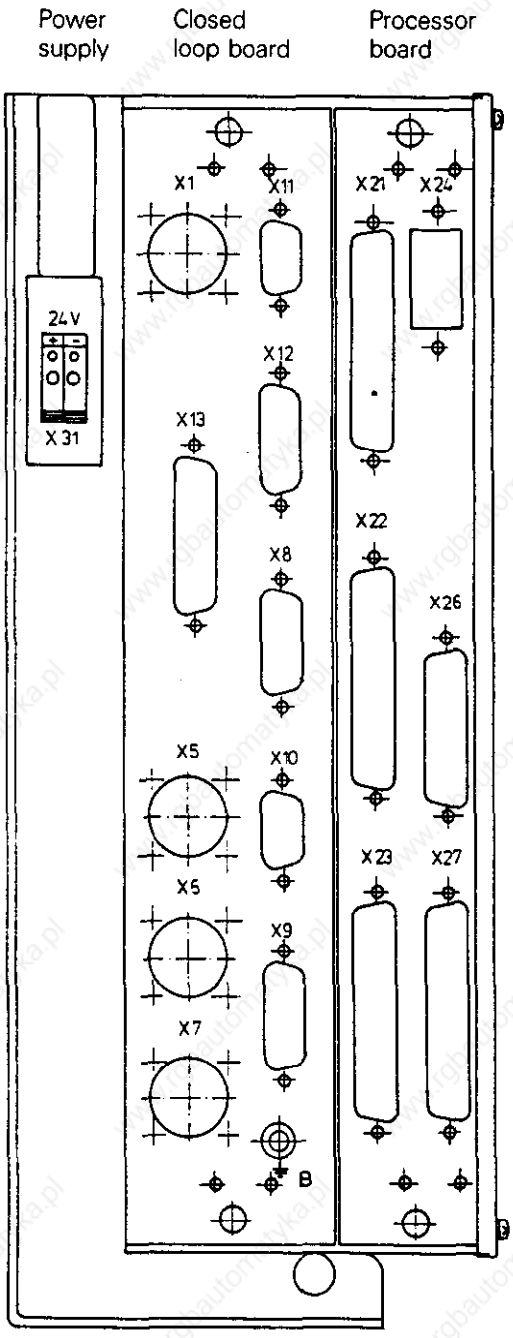

Closed loop:

		Color code
X1 = Encoder 1	Standard allocation (switchover via machine parameters 253 . . . 257)	Blue
X13 = Encoder 2, 3, 4		
X5 = Encoder 5		
X6 = Encoder S		
X7 = Electronic handwheel HR 150/HR 250		
X8 = Nominal value output for X, Y, Z, IV, V, S		Red
X9 = Visual display unit BE 412B		Blue
X10 = Reference pulse inhibitor		Yellow
X11 = Handwheel with axis selection keys		Red
X12 = Touch probe system TS 120 (TS 111/511)		Yellow
B = Operational ground		

Processor:

X21 = PLC-output	Red
X22 = PLC-input	Yellow
X23 = TNC-keyboard unit TE 355	Blue
X24 = Power supply 24 V– for PLC	
X26 = Data interface RS-232-C/V.24	Red
X27 = Machine operating panel	Green

Power supply:

X31 = Power supply 24 V– for LE

4.3.4 Connector layout of the TNC 351/355 B/F/Q/W CLP PROCESSOR Board

X1,X2,X3,X4 encoder input 1, 2, 3, 4
Sine signal input
Flanged socket with 9-pin female insert

Signal designation	Connection no.
0° +	1
0° -	2
90° +	5
90° -	6
RI+	7
RI-	8
+5 V (U_P)	3
0 V (U_N)	4
Inner shield	9
Outer shield = connector housing	

X5 encoder input 5
Square-wave signal input

Flanged socket with 12-pin female insert

Signal designation	Connection no.
U_a1	5
$\overline{U_a1}$	6
U_a2	8
$\overline{U_a2}$	1
U_a0	3
$\overline{U_a0}$	4
U_aS not present	-
$\overline{U_aS}$	7
+5 V (sensor line)*	2
+5 V (U_P)	12
0 V (sensor line)*	11
0 V (U_N)	10
Shield = housing	9 (via spring)

* The sensor line is connected in the unit with the pertinent supply line.

X6 Electronic Handwheel HR 150/250

Flanged socket with 9-pin female insert

Signal designation	Connection no.
0° +	1
0° -	2
90° +	5
90° -	6
+5 V (U_P)	3
0 V (U_N)	4
Inner shield (0 volt)	9
Outer shield = connector housing	
	7,8 do not assign

X7 Touch Probe System

Flanged socket with 7-pin flanged socket

Signal designation	Connection no.
U_N	1
U_P	2
Start	3
Trigger signal	4
Standby signal	5
Battery warning	6
Inner shield (U_N)	7
Outer shield	connector housing

X8 nominal value output for X,Y,Z,IV,V*,S

Flanged socket with 15-pin female insert

Signal designation	Anschluß-Nr.
Analog output of X-axis	1
Analog output of Y-axis	3
Analog output of Z-axis	5
Analog out. of IVth-axis	7
Analog output of Vth-axis	4 *
Analog output of S-axis	8
0V X-axis	9
0V Y-axis	11
0V Z-axis	13
0V IVth-axis	14
0V Vth-axis	6 *
0V S-axis	15
Outer shield = connector housing	
	2,4,6,10,12 do not assign

* only with 5-axes controls

X9 BE 412 Visual Display Unit

Flanged socket with 15-pin female insert

Signal designation	Anschluß-Nr.
0 V	1,8,11
V SYNC	9
H SYNC	10
BRIGHT/DARK	12
VIDEO	13
Outer shield = connector housing	
	3 to 6,14,15 do not assign

X10 reference pulse inhibit

Flanged socket with 9-pin female insert

Signal designation	Connection no.
Shield	1
Ref. pulse inhibit X1	2
Ref. pulse inhibit X2	3
Ref. pulse inhibit X3	4
Ref. pulse inhibit X4	5
Ref. pulse inhibit X5	6
+24 V (PLC)*	8
0 V (PLC)	9
	7 do not assign

* only with LE 351, id.no. 243 992 .., LE 355, id.no. 237 660.., 238 324.., 242 407 .., 242 408 ..

4.3.5 Connector layouts for LE 355 C/G/S/Y/.R CLP PROCESSOR BOARD

X1, X2, X3, X4 encoder input 1, 2, 3, 4

see page 16 X1, X2, X3, X4

X5, X6 encoder input 5, 6
square-wave input

see page 16 X5

X7 HR 150/250 Electronic Handwheel

see page 16 X6

X8 nominal value output for X, Y, Z, IV, V, S

see page 16 X8

X9 BE 412 Visual Display Unit

see page 16 X9

X10 reference pulse inhibit

see page 16 X10

X11 Handwheel with axis switch-over keys

Flanged socket with 9-pin female/male insert

Signal designation	Connection no.
0V	2
+5V	3
+12V	4
-15V	5
DTR	6
RxD	7
Do not assign	1, 8, 9

X12 TS120 Touch Probe System (TS 111/TS 511 only via cable adapter)

Flanged socket with 15-pin female/male insert

Signal designation	Connection no.
0V-shield	1
Standby signal	3
Start	4
+15V	5
+15V (U_P)	6
Battery warning	7
0V (U_N)	8
Trigger signal	9
$\overline{\text{Trigger signal}}$[2)]	10
Do not assign	2, 11 to 15

X13 encoder 2, 3, 4 with square-wave signal input

Flanged socket with 25-pin female insert

Signal designation	Connection no.	
$\overline{U_{a1}}$	1	encoder 4
$\overline{U_{a2}}$	2	
$\overline{U_{a0}}$	3	
$\overline{U_{as}}$	4	
U_{a1}	14	
U_{a2}	15	
U_{a0}	16	
0V	17	
$\overline{U_{a1}}$	5	encoder 3
$\overline{U_{a2}}$	6	
$\overline{U_{a0}}$	7	
$\overline{U_{as}}$	8	
U_{a1}	18	
U_{a2}	19	
U_{a0}	20	
0V	21	
$\overline{U_{a1}}$	9	encoder 2
$\overline{U_{a2}}$	10	
$\overline{U_{a0}}$	11	
$\overline{U_{as}}$	12	
U_{a1}	22	
U_{a2}	23	
U_{a0}	24	
0V	25	
Do not assign	13	
Outer shield	housing	

4.3.6 Connector layout of PROCESSOR BOARD

X21 PLC-output

Flange socket, female (37-pole)

Contact No.	Allocation
1	A0 [3]
2	A1 [3]
3	A2 [3]
4	A3 [3]
5	A4 [3]
6	A5 [3]
7	A6 [3]
8	A7 [3]
9	A8
10	A9
11	A10
12	A11
13	A12
14	A13
15	A14
16	A15
17	A16
18	A17
19	A18
20	A19
21	A20
22	A21
23	A22
24	A23
25	A24 [2]
26	A25 [2]
27	A26 [2]
28	A27 [2]
29	A28 [2]
30	A29 [2]
31	A30 [2]
32, 33	do not assign
34	Control operational
35, 36, 37	24 V via external EMERGENCY STOP disconnectible (PLC [1])
Housing	External screen

[1] If required, the supply voltage for the disconnectible outputs can be assigned to connector X24, pin 1

[2] not disconnectible via external EMERGENCY STOP
A0 ... A23 are disconnectible via external EMERGENCY STOP

[3] A0 ... A7 duplicated on X27, Machine operating panel

X22 PLC-input

Flange socket, female (37-pole)

Contact No.	Allocation
1	E0
2	E1
3	E2
4	E3 Feedback signal for test "Control operational"
5	E4
6	E5
7	E6
8	E7
9	E8
10	E9
11	E10
12	E11
13	E12
14	E13
15	E14
16	E15
17	E16
18	E17
19	E18
20	E19
21	E20
22	E21
23	E22
24	E23
25	E24
26	E25
27	E26
28	E27
29	E28
30	E29
31	E30
32	E31
33, 34	do not assign
35, 36, 37	0 V (PLC)[1]
Housing	External screen

[1] If required, the 0 V-connection can be assigned to connector X24, pin 3.

X23 KEYBOARD Unit TE 351/355

Flanged socket connector (37-pin)

Pin no.	Assignment	
1	RL0	for key matrix
2	RL1	
3	RL2	
4	RL3	
5	RL4	
6	RL5	
7	RL6	
8	RL7	
9	E128	
10	E129	
11	E130	
12	E131	
13	E132	
14	E133	
15	E134	
16	E135	
17	E136	
18	E137	
19	E138	
20	OUT0	for key matrix
21	OUT1	
22	OUT2	
23	OUT3	
24	OUT4	
25	OUT5	
26	OUT6	
27	OUT7	
28	E139	
29	E140	
30	+15V (supply for keys on Machine Operating Panel)	
31	E141	
32	E142	
33	E143	
34	Spindle Override (wiper)	
35	Feed Override (wiper)	
36	+12V Override Potentiometer	
37	0V Override Potentiometer	
housing	outer shield	

PLC-inputs E128...E140 from Machine Operating Panel

X24 PLC Supply

Terminal block

Terminal no.	Assignment
1	+24V disconnectable via external EMERGENCY-STOP[1]
2	+24V not disconnectable
3	0V[2]

[1] The supply can be optionally assigned to connector X21, pin 35, 36, 37.

[2] 0V can be optionally assigned to connector X22, pin 35, 36, 37.

X26 Data Interface RS-232-C

Flanged socket, connector (25-pin)

Pin no.	Assignment
1	shield
2	RxD
3	TxD
4	CTS
5	RTS
6	DTR
7	GND
8 to 19	do not assign
20	DSR
21 to 25	do not assign
housing	outer shield

X27 Machine Operating Panel

Flanged socket, connector (37-pin)

This connection is used when the assigned inputs on the TE 355 are insufficient.

Pin no.	Assignment
1	E128
2	E129
3	E130
4	E131
5	E132
6	E133
7	E134
8	E135
9	E136
10	E137
11	E138
12	E139
13	E140
14	E141
15	E142
16	E143
17	E144
18	E145
19	E146
20	E147
21	E148
22	E149
23	E150
24	E151
25	E152
26	A0
27	A1
28	A2
29	A3
30	A4
31	A5
32	A6
33	A7
34	0 V (PLC)
35	0 V (PLC)
36	+24 V (PLC)
37	+24 V (PLC)

PLC outputs A0 ... A7 to Machine Operating Panel

X31 Logic Supply (LE)

Pin no.	Assignment
–	0 V
–	+24 V

T10

4.3.7 Connector Layout of the PLC POWER I/O Board Assembly PL 300

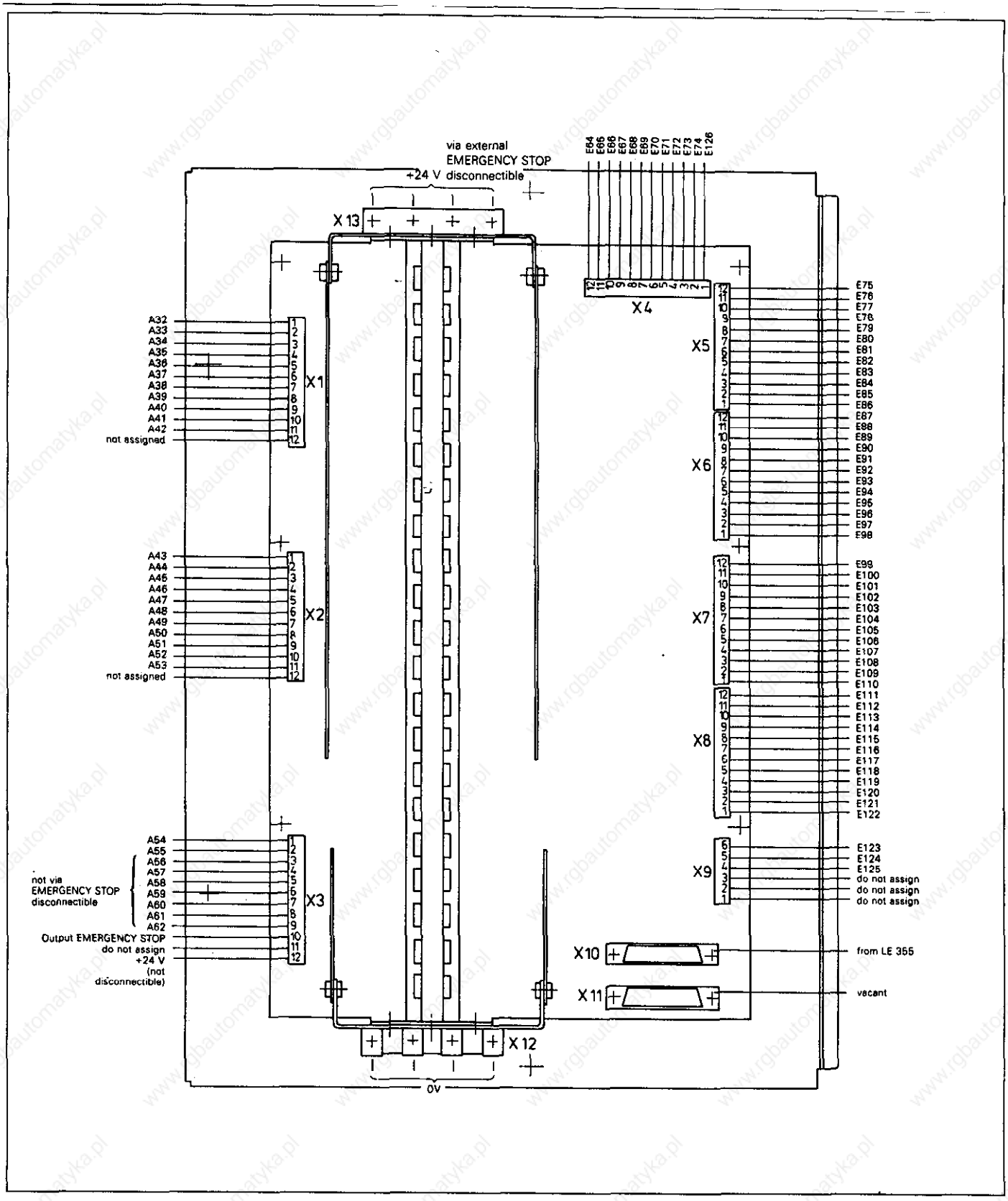

4.3.8 Connector Layouts of the TE 351/355 KEYBOARD Unit

X1 For connection of the machine operating panel

Flange socket, female (25-pole)

Contact No.	Allocation
1	E140
2	E139
3	E138
4	E137
5	E136
6	E135
7	E134
8	E133
9	E132
10	E131
11	E130
12	E129
13	E128
14[1)]	0 V (override potentiometer)
15[1)]	+12 V (override potentiometer)
16[1)]	Feed rate override potentiometer (wiper)
17[1)]	Spindle override potentiometer (wiper)
18 to 21	do not assign
22	+15 V (Supply for buttons of machine operating panel)
23	E143
24	E142
25	E141

[1)] **Caution!**
Do not assign if the potentiometer on the TE is to be used.

X2 For connection of the logic unit LE 355

Flange socket, male (37-pole)

Contact No.	Allocation	
1	RL0	for key matrix
2	RL1	
3	RL2	
4	RL3	
5	RL4	
6	RL5	
7	RL6	
8	RL7	
9	E128	
10	E129	
11	E130	
12	E131	
13	E132	
14	E133	
15	E134	
16	E135	
17	E136	
18	E137	
19	E138	
20	OUT0	for key matrix
21	OUT1	
22	OUT2	
23	OUT3	
24	OUT4	
25	OUT5	
26	OUT6	
27	OUT7	
28	E139	
29	E140	
30	+15 V (Supply for buttons of machine operating panel)	
31	E141	
32	E142	
33	E143	
34	Spindle override (wiper)	
35	Feed rate override (wiper)	
36	+12 V Override potentiometer	
37	0 V Override potentiometer	

4.4 PROCESSOR Board

4.4.1 Interface

- 57 PLC-inputs
- 32 PLC-outputs
- Keyboard Unit
- Machine Operating Panel
- V. 24-interface

4.4.2 Supervision

- Program memory
- Data Processing
- PLC-program
- Acknowledgement Emergency-stop

4.4.3 Storage

- NC-Programs
- PLC-Program
- Machine parameters
- List of compensation values
- Operating program

4.5 CLP PROCESSOR Board

4.5.1 Interface

- Encoder inputs
- Reference pulse inhibit
- Electronic Handwheel
- 3D-Touch Probe
- Analog outputs
- Display

4.5.2 Supervision

- Measuring systems
- Temperature
- Buffer battery
- Data processing
- Program memory
- Axis positions (closed loop)

4.5.3 Storage

- Operating program

Notes

4.6 Grounding Diagram

4.6.1 Logic Unit without grounding terminal

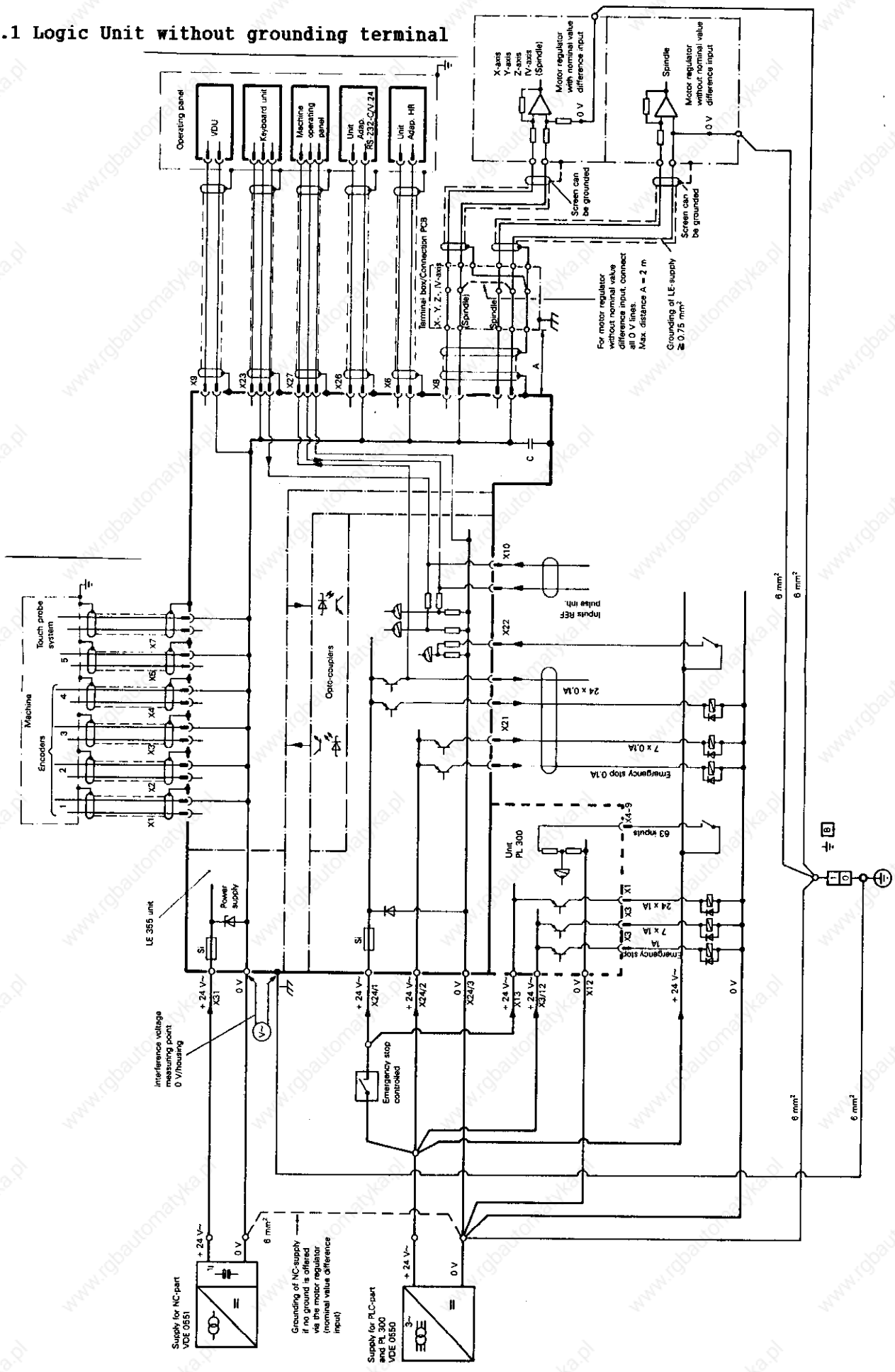

4.6.2 Logic Unit with grounding terminal

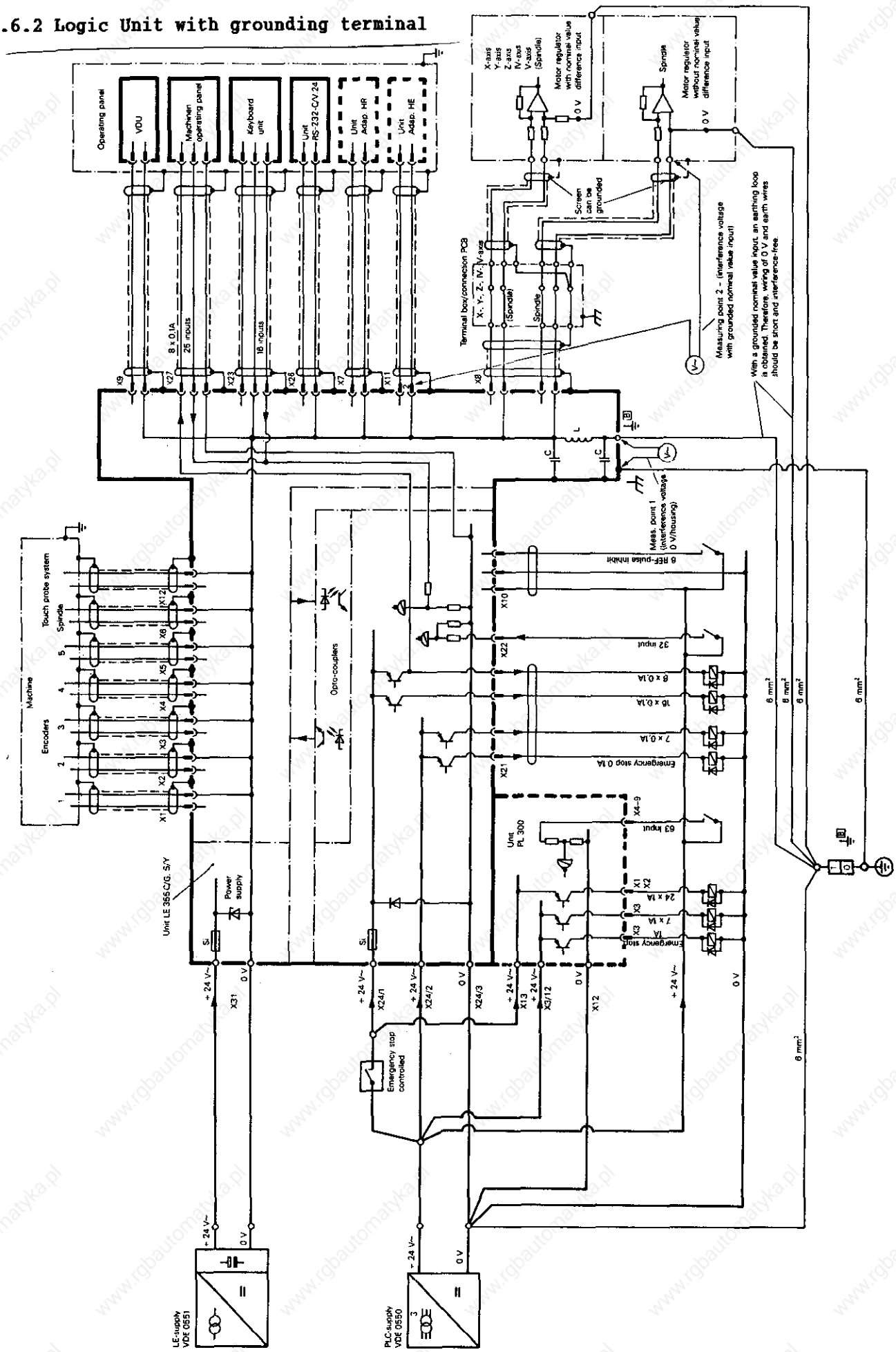

5. External Supply

5.1 Requirements of the Ext. Supply

The LE 355 must not be supplied by the machine control voltage! The LE 355 needs its own, external, separately generated supply voltage to VDE 0551. 24 V DC-voltage with a permissible oscillated AC-component of 1.5 V_{PP} (recommended filter capacitor 10000 µF/40 V–).

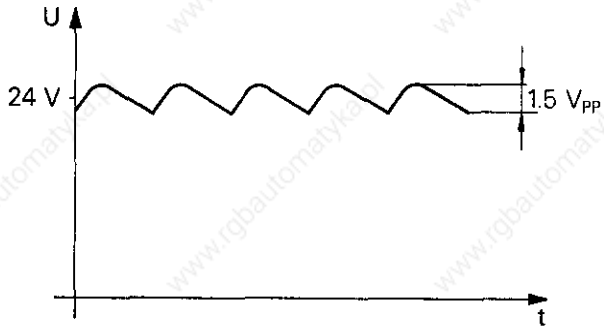

The **PLC-part** (PLC-inputs and outputs of the LE 355 and PL 300) is operated on the **24 V control voltage of the machine** which is generated according to VDE 0550.

Superimposed oscillated AC components which derive from an uncontrolled three-phase non-filtered bridge circuit with a ripple factor (see DIN 40110/10.75, Section 1.2) of 5% are permitted. This results in a maximum absolute value of 33.4 V for the upper voltage limit and a minimum absolute value of 18.5 V for the lower limit.

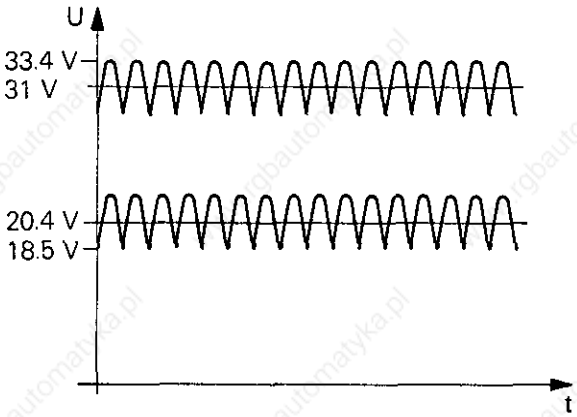

The **0 V-lines** of the two power sources must be **connected together (Ø ≧ 6 mm²)** and to the **central operating ground of the machine** (⏚ B) via an earth ground **(Ø ≧ 6 mm²).**

The voltages must comply with the definitions given below:

Unit		Supply voltage	Voltage range Average DC voltage	Max. current consumption	Power consumption
LE 355	NC	24 V (VDE 0551)	Lower limit 20.4 V ⎓	1.5 A	approx. 30 W
	PLC	24 V (VDE 0550)		1.8 A if half of the inputs and outputs are driven simultaneously	approx. 6 W if approx. 1/3 of the inputs and outputs are driven simultaneously
PL 300			Upper limit 31 V ⎓[1)]	21 A if half of the inputs and outputs are driven simultaneously	approx. 25 W if approx. 1/3 of the inputs and outputs are driven simultaneously

[1)] Voltage increases up to 36 V ⎓ for t < 100 ms are permissible.

The BE 412(B) Display is supplied with mains voltage (ac voltage). With the mains voltage selector two voltage ranges can be adjusted in the BE 412B and six in the BE 412. Please check whether the mains voltage selector is correctly set and whether the correct mains fuse is used.

BE 412

Voltage supply	Voltage range	Frequency range	Power consumption	Mains fuse
100/120/140 V ~	-15 % ... +10%	48 ... 62 Hz	approx. 40 W	T 0.630 A
200/220/240 V ~				T 0.315 A

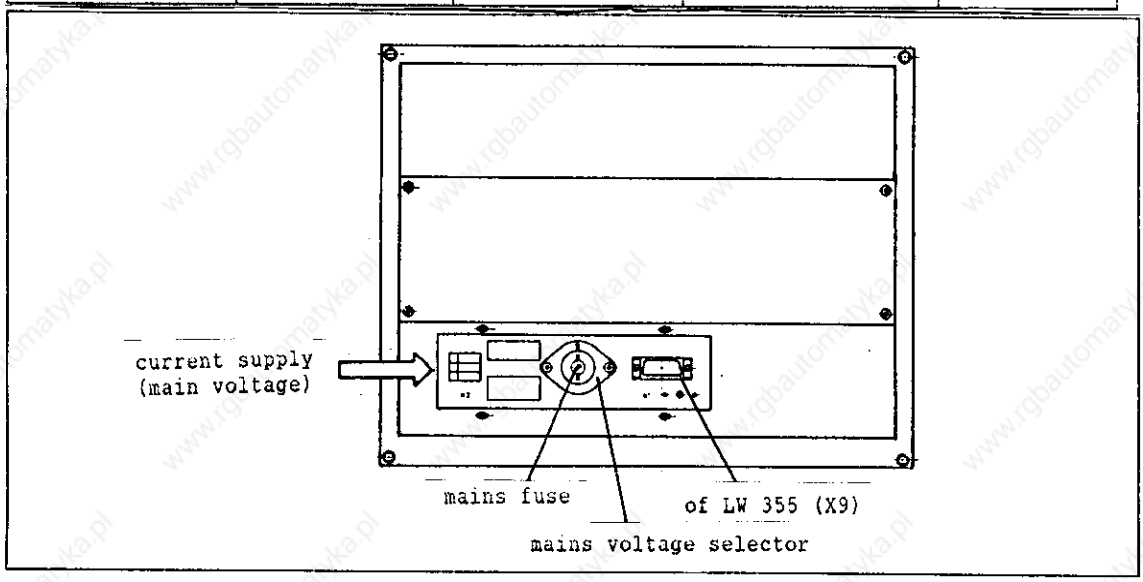

In case of 110 V supply voltage the mains voltage selector must be adjusted to 120 V.

BE 412B

Supply voltage	Voltage range	Frequency range	Power consumption	Mains fuse
110 V~	85 V~ – 132 V~	48 ... 62 Hz	approx. 40 W	M 2 A
220 V~	170 V~ – 264 V~			M 1.25 A

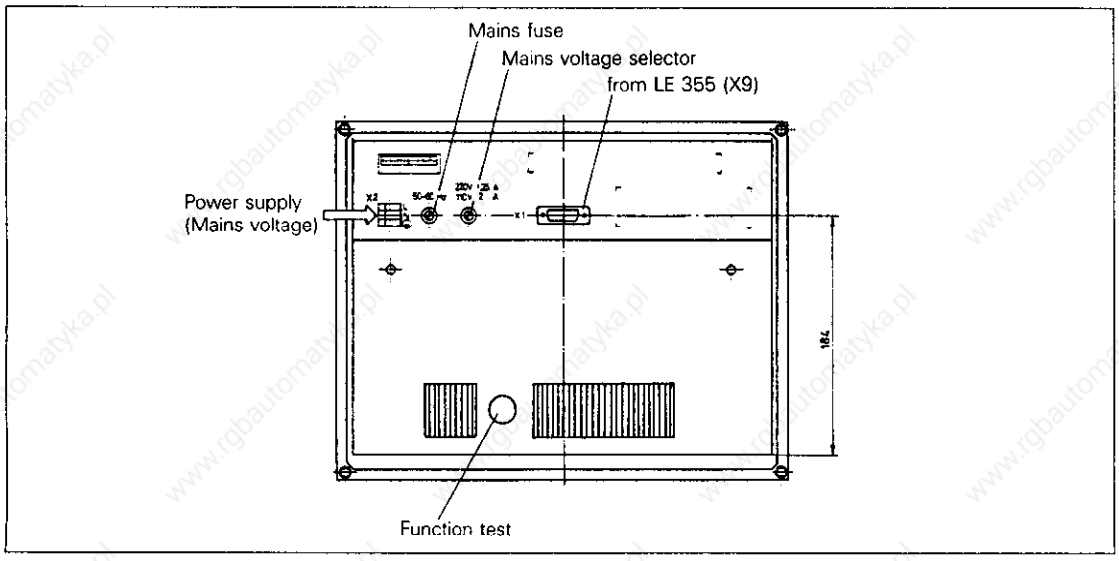

5.2 Supply for the NC-Part

The supply for the NC-part is connected to the X31 terminals.

The various voltages for the LE are converted in the "POWER SUPPLY Board Assembly" from the +24V- supplied (see Block Diagrams, page 27 and 28).

The on/off-condition of the output voltages are displayed by LEDs. The level of the individual voltages can only coarsely be displayed by LEDs. To make a precise statement about the single voltages they must be measured for accuracy and correspond to the following table:

Output	U_{NOML} [V]	U_{MIN} [V]	U_{MAX} [V]	I_{NOML} [A]
+ 5 V	+ 5.15	+ 5.05	+ 5.25	2.5
+ 12 V	+ 12	+ 11.4	+ 12.6	0.15
- 12 V	- 12	- 11.4	- 12.6	0.08
+ 15 V	+ 15	+ 14.2	+ 15.8	0.3
- 15 V	- 15	- 14.2	- 15.8	0.07
U_{BATT}	+ 4.5	+ 3.7	-	- 50 µA
+ 24 V $_{BE}$	+ 24	+ 20.4	+ 31	-
+ 12 V $_{BE}$ 1)	+ 12	+ 11.5	+ 12.5	1.3
+ 5V * 1)	+ 5	+ 4.75	+ 5.25	0.3

The red LED for the RESET signal illuminates briefly when switching the control on/off.
(only applies for TNC 355; the TNC 351 does not have a RESET LED)

RESET TNC 351 $U_{L\ MAX}$ = 0.4 V $U_{H\ MIN}$ = 3.9 V t_L = 100-300ms

RESET TNC 355 $U_{L\ MAX}$ = 0.4 V $U_{H\ MIN}$ = 3.0 V t_L = 100-300ms

1) + 12 V $_{BE}$ (for BE 212) and +5V* (potential-free) only with the power supply, id.no. 236 484 04 for TNC 351.

5.2.1 LE 351 NC POWER SUPPLY Board Assembly

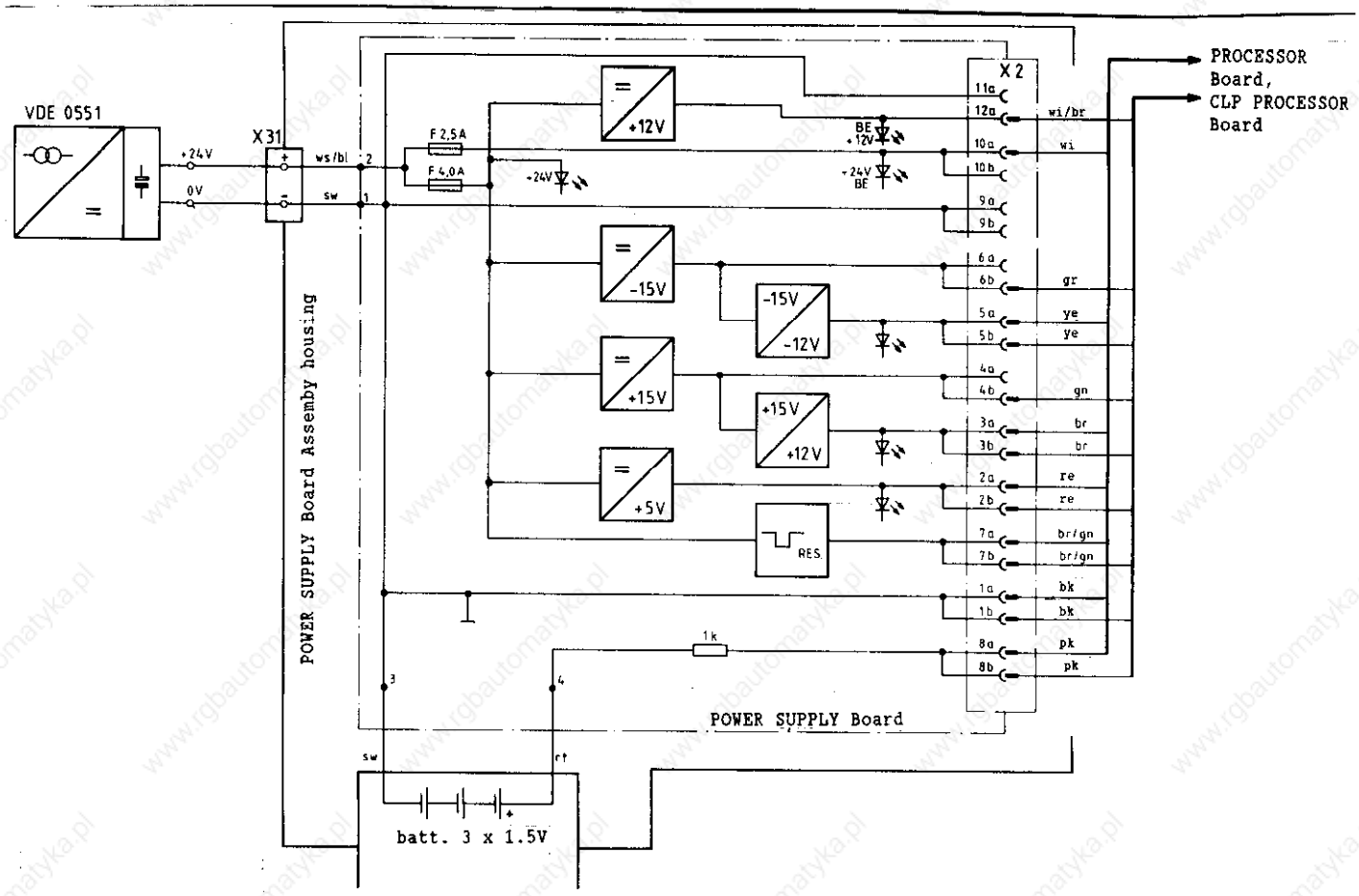

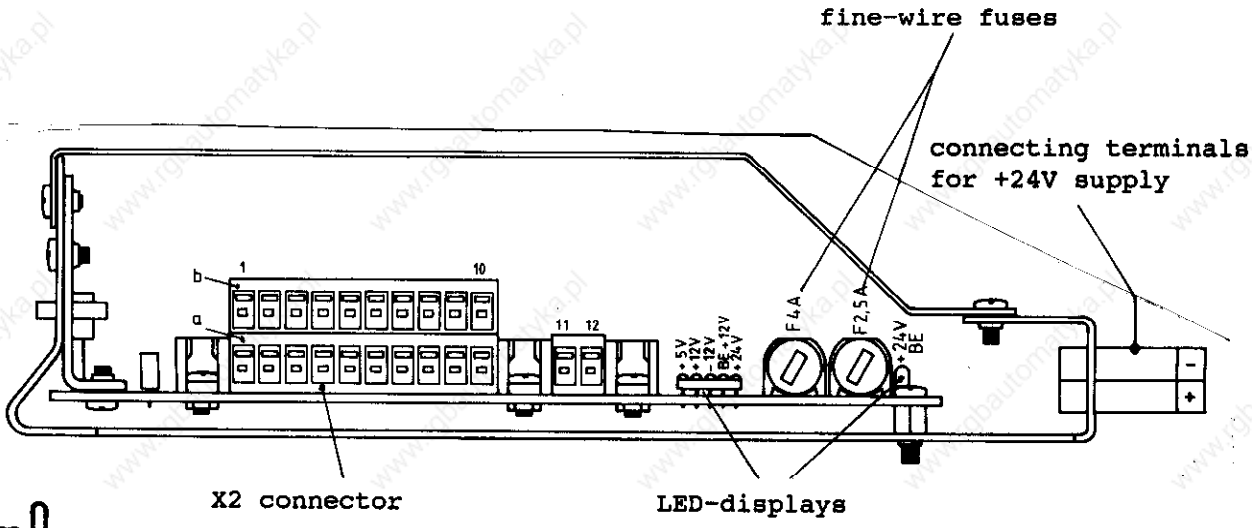

The connector doesn't exist with new versions due to direct soldering of the insulated wires onto the power supply board.

5.2.2 LE 355 NC POWER SUPPLY Board Assembly

Fig. 4 PLC Adapter (Id. No. 224 873 ZY)

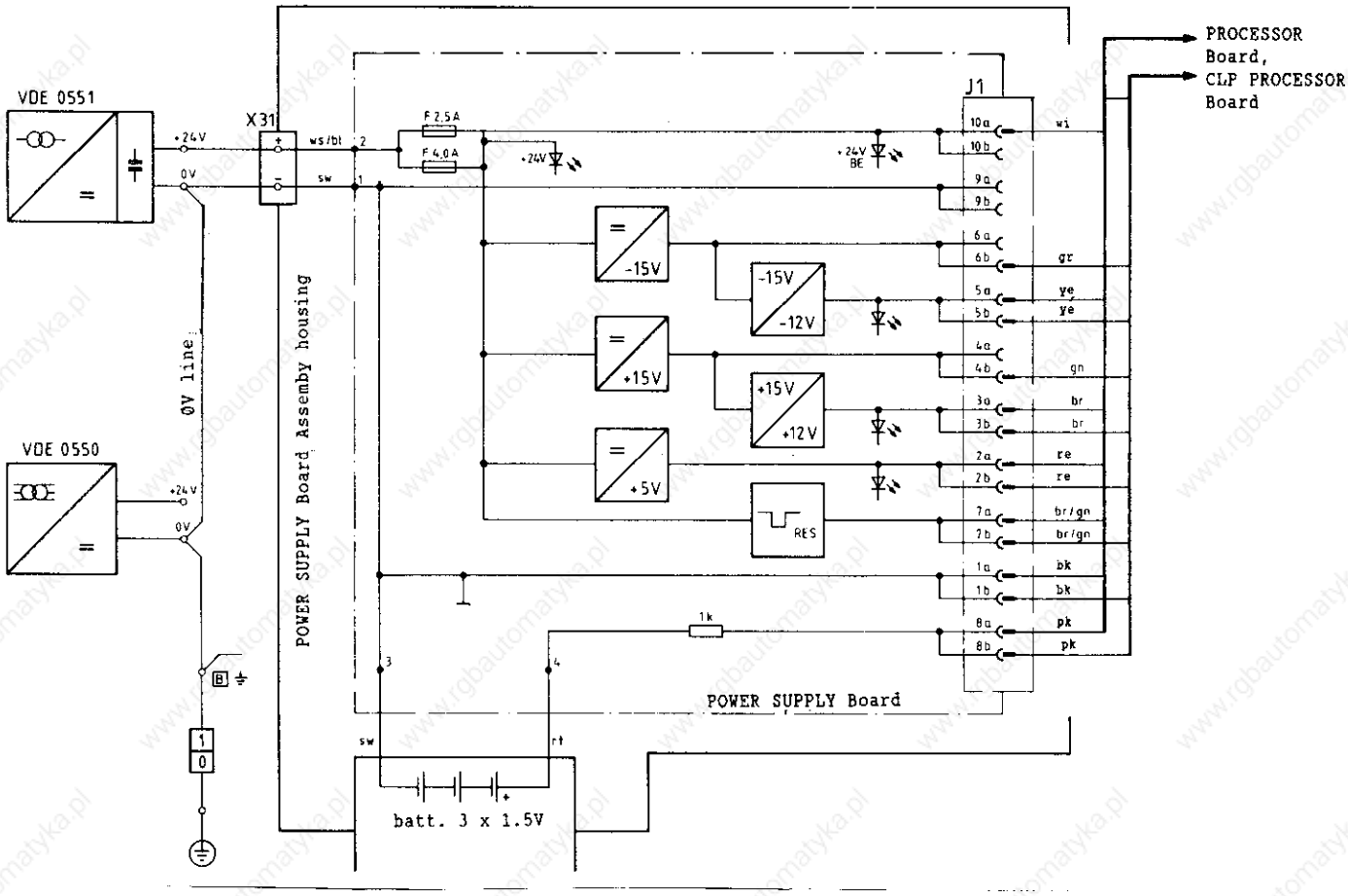

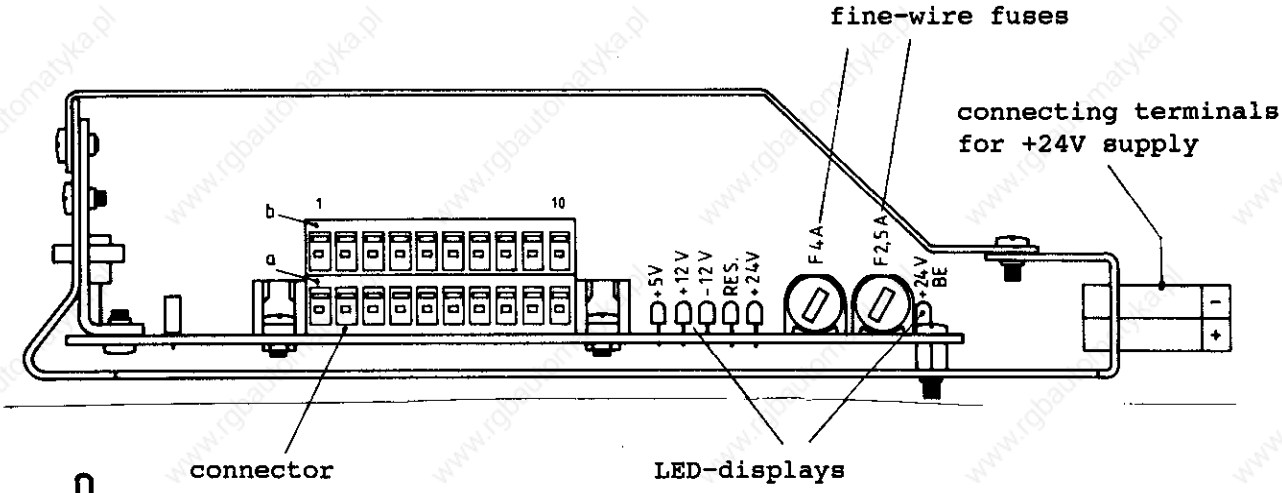

The connector doesn't exist with new versions due to direct soldering of the insulated wires onto the power supply board.

5.3 Testing the POWER SUPPLY Board Assembly

The POWER SUPPLY Board Assembly is protected by two fine-wire fuses. The +24V BE output voltage is protected by a F 2.5A fuse, all other output voltages by F 4.0A (see Block Diagram, pages 27 and 28). If a fault is detected (all voltages are missing) check if the LE 24V supply is present, then the two fuses.

Safe and fast testing of the POWER SUPPLY Board Assembly is possible by means of the PSA LOAD UNIT. The plug connection to the boards at the POWER SUPPLY Board Assembly has to be disconnected and the PSA LOAD UNIT has to be connected in its place.

Various voltages can be measured with a voltmeter at the sockets of the PSA LOAD UNIT. The measured values and tolerances can be compared with the values in the table, page 26. If the values of the measurements do not coincide with the values of the table the POWER SUPPLY Board Assembly is defective.

If no PSA LOAD UNIT is available the voltages may also be measured at the test points on the PROCESSOR Board or on the CLP PROCESSOR Board (for location of test points, see section 5.3.2).

A T T E N T I O N

When connecting (disconnecting, always switch off mains switch first!

5.3.1 Measuring Circuit with PSA LOAD UNIT

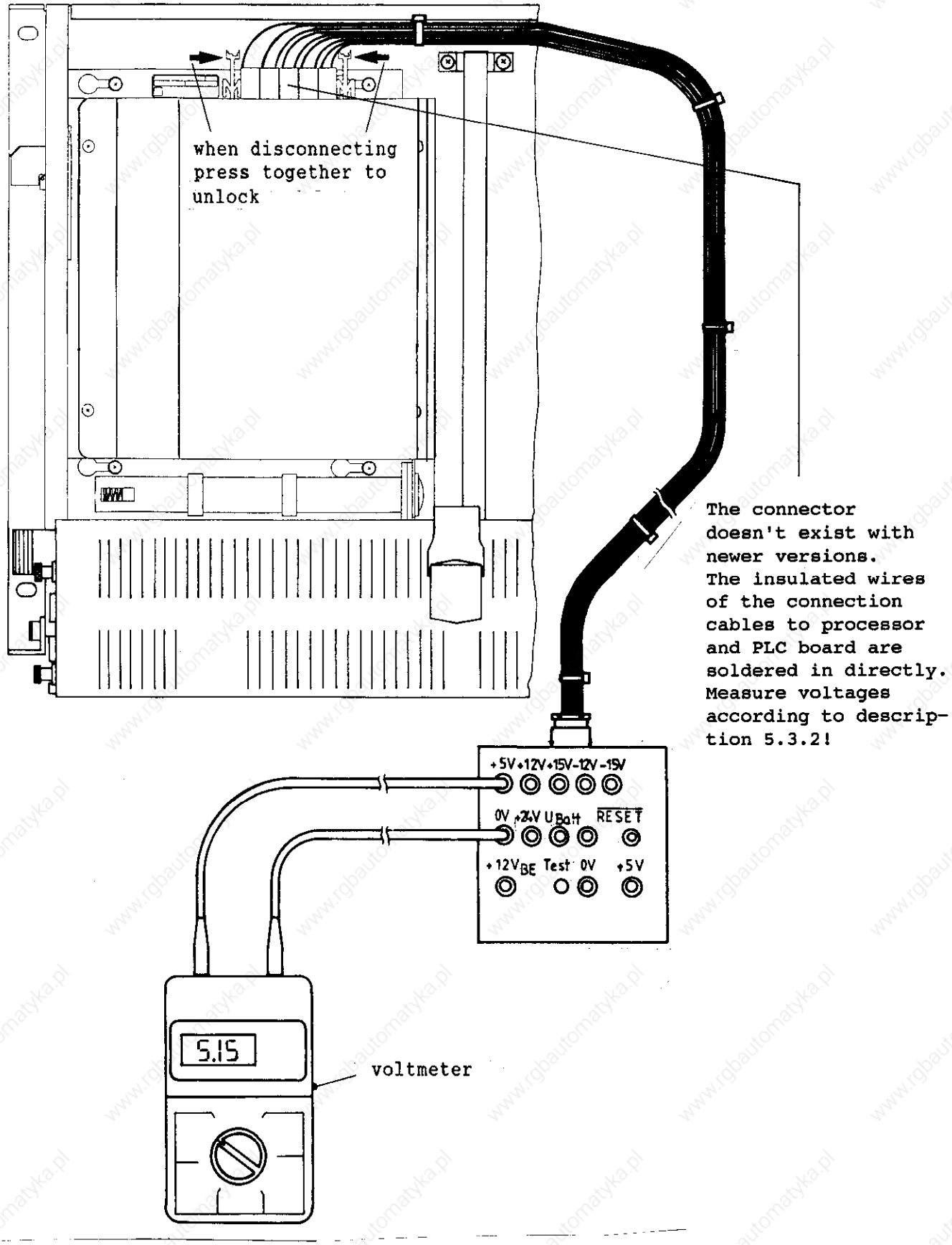

5.3.2 Test Points on the Boards

CLP PROCESSOR Board

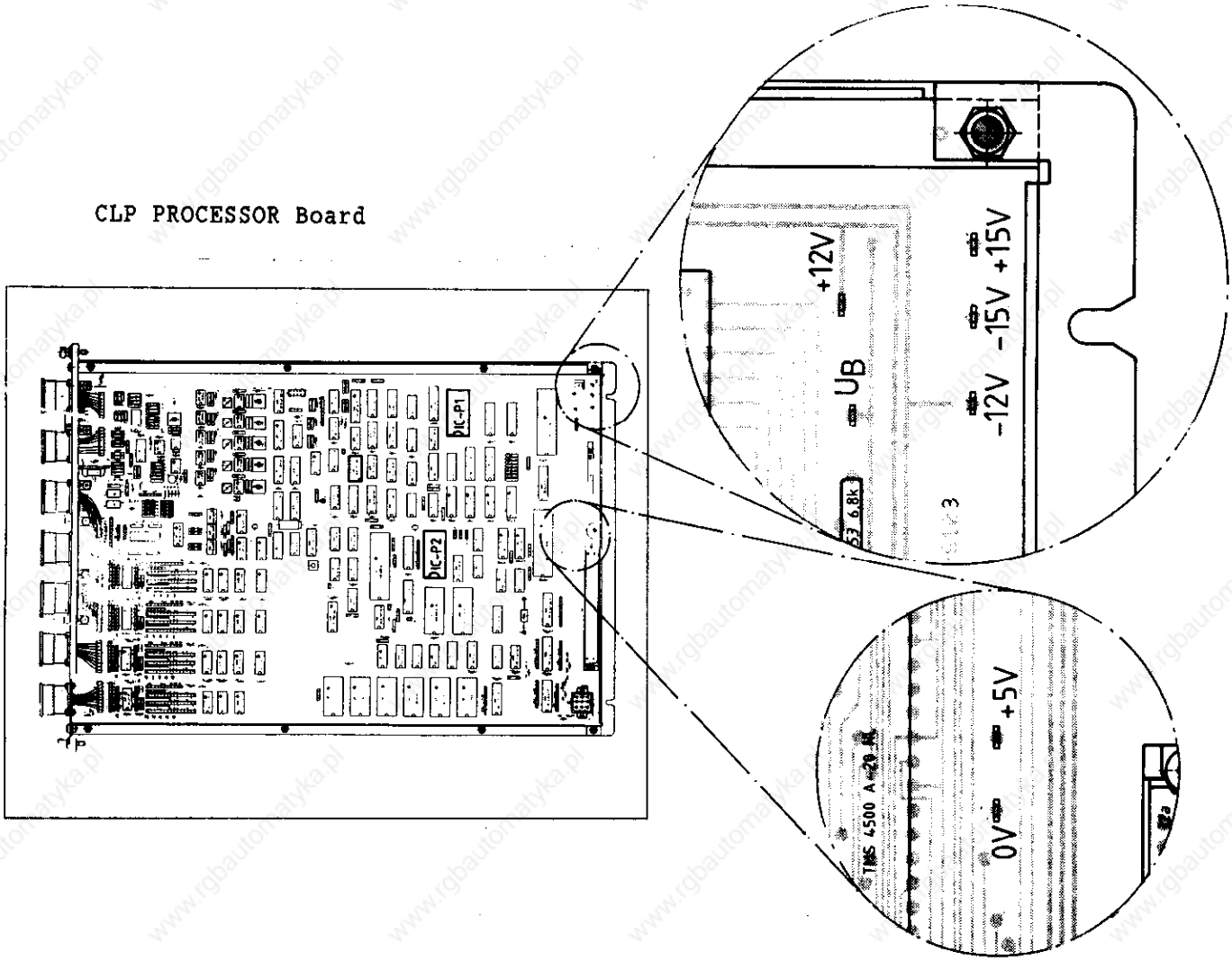

PROCESSOR Board

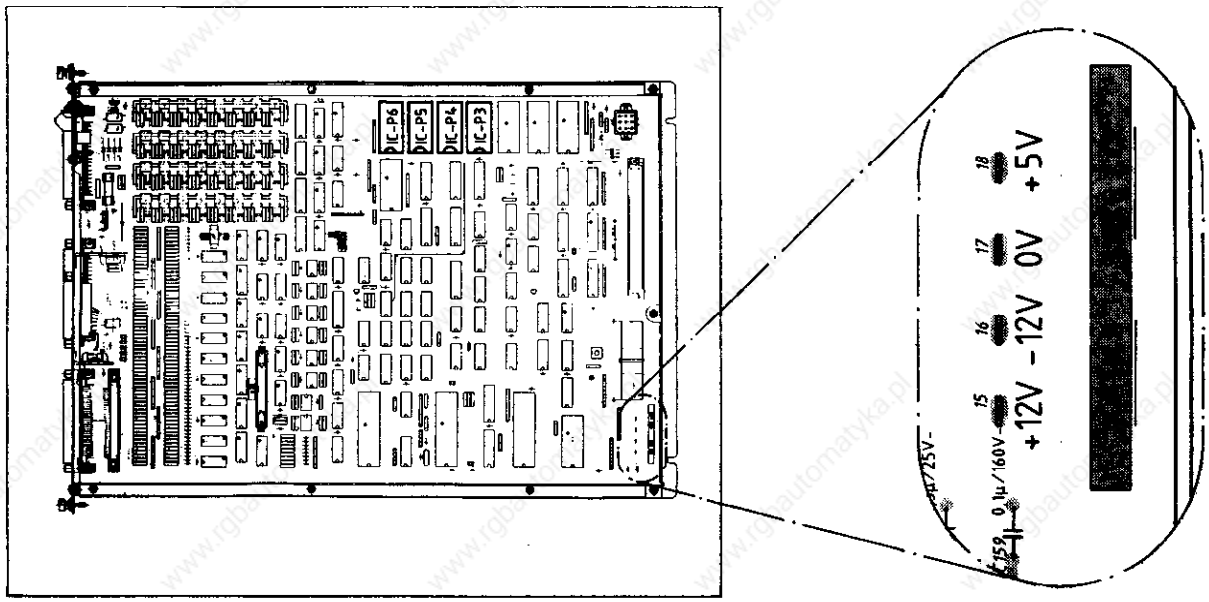

5.4 Supply for the PLC-Part

The terminal supply of the internal PLC-part is normally connected to the **X 24** terminal (1 = **+24V disconnectable**, 2 = **+24V not disconnectable** 3 = **0V**). The **0-volt line** as well as the **+24V disconnectable** can optionally be connected via connector **X 21** or **X 22** (see PLC-Connection Diagram, page 33).

The supply for the PLC POWER Board Assembly PL 300 (only with Q/W/S/Y-versions) is connected to the **X 12** terminal **(0V)**, **X 13 (+24V disconnectable)** and the connector blocks **X 3/12 (+24V not disconnectable)**. See PLC-Connection Diagram, page 33.

There are **no** fuses on the PLC POWER I/O Board Assembly (electronic current limitation).

The **+24V which can be switched off** are protected on all PROCESSOR boards with a **F 2.5A** fine-wire fuse and indicated with a green LED. The **+24V which cannot be switched off** are only protected with a **F 1A** fine-wire fuse on the PROCESSOR Board, id.no. 249 652 ..

fine-wire fuse

PROCESSOR Board, id.no. 237 930 ..

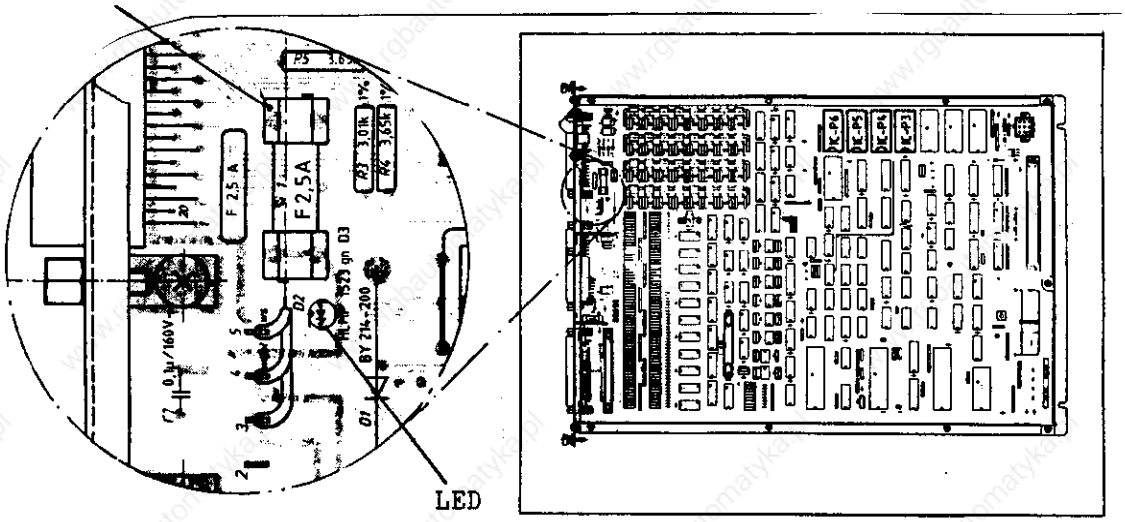

fine-wire fuses

PROCESSOR Board, id.no. 249 652 ..

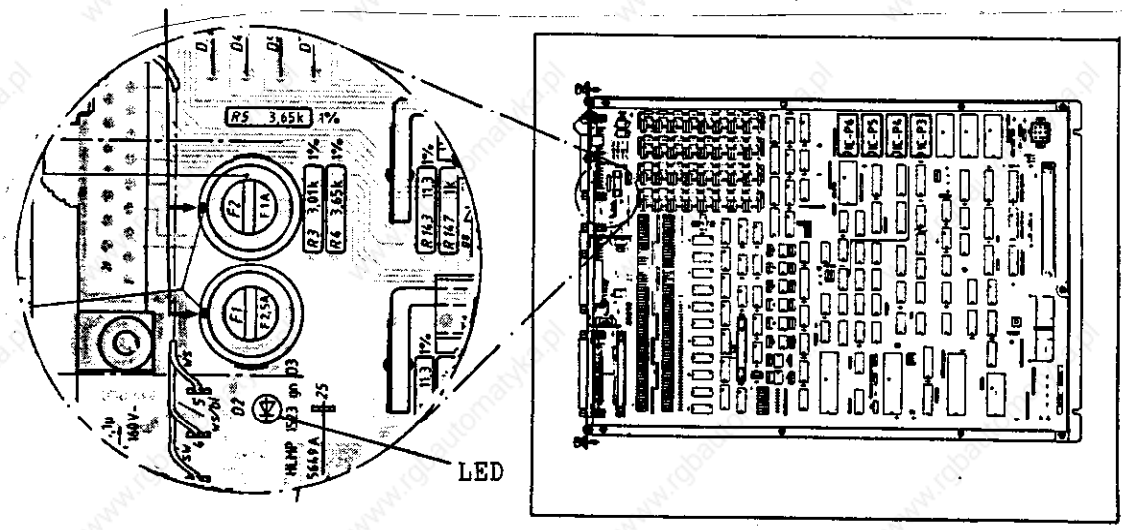

5.4.1 Connection Diagram for the PLC Supply

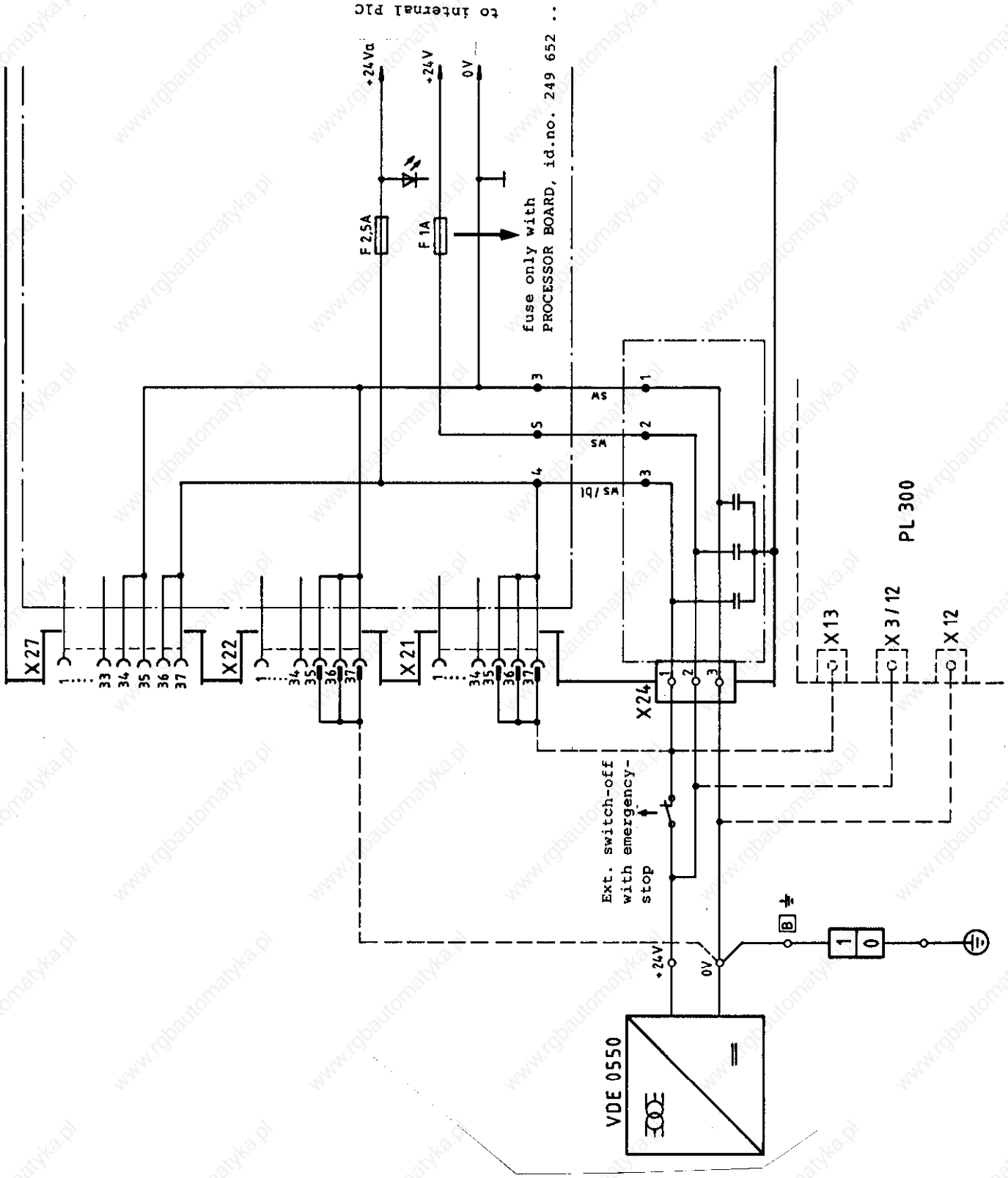

5.5 Buffer Batteries

Change Buffer Battery

The buffer battery is the voltage source for the program memory with switched-off machine.

If the message

EXCHANGE BUFFER BATTERY

appears the batteries have to be exchanged within one week.

The buffer batteries are located behind a PG screwed connection in the POWER SUPPLY Board Assembly of the LE 351/355.

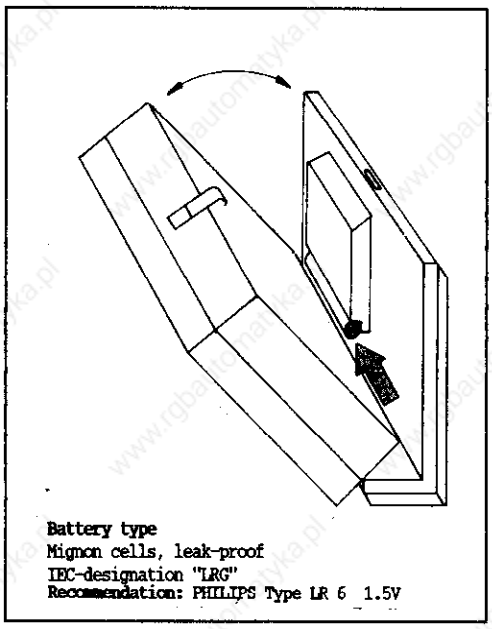

Apart from the batteries additional rechargeable NiCd batteries on the PROCESSOR Board were used to backup the program memory of TNC 351 and TNC355.

The mains voltage can be switched off to exchange the batteries. The rechargeable batteries store the contents without batteries for approx. 2 weeks.

The rechargeable NiCd batteries are only charged if the TNC is switched on.

PROCESSOR Board

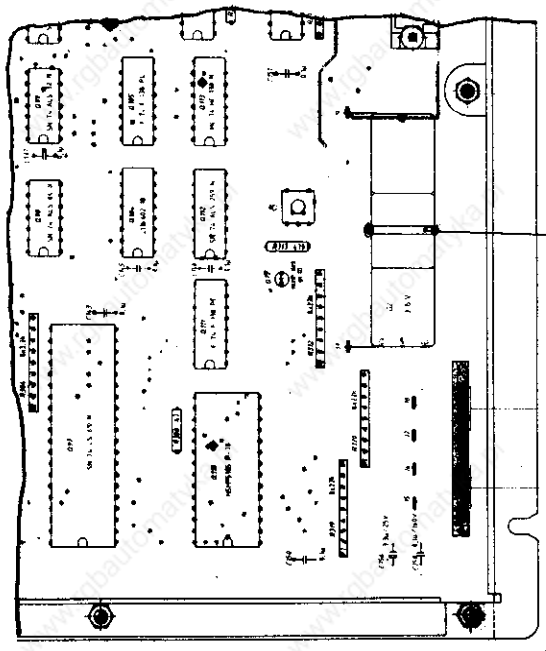

rechargeable NiCd batteries

6. TE 351/355 KEYBOARD UNIT

6.1 Overview

TE 351 A	Id.no. 243 995 02	1)4)
TE 355	" 237 661 01	2)4)
TE 355 A	" " 02	4)
TE 355 C	" " 03	5)
TE 355	Id.no. 255 015 01	2)3)4)
TE 355 A	" " 02	3)4)
TE 355 C	" " 03	3)5)
TE 355 B	Id.no. 241 964 01	4)
TE 355 D	" " 02	5)
TE 355 B	Id.no. 255 016 01	3)4)
TE 355 D	" " 02	3)5)

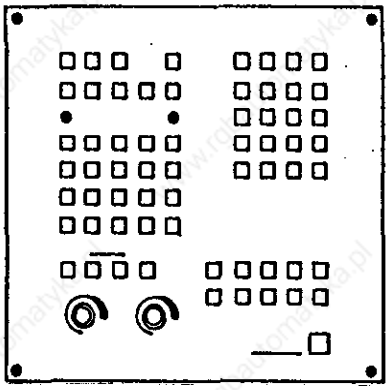

high version

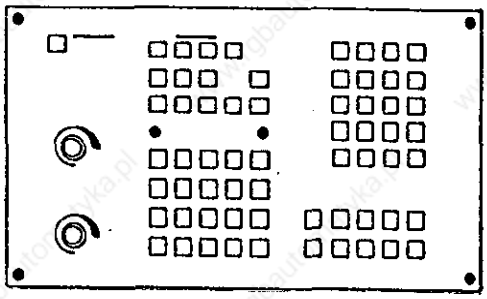

wide version

1) without graphic keys
2) without connector **X 1** (connection to Machine Operating Panel)
3) with ground connection
4) IV-axes-version
5) V-axes-version

6.2 Circuit Diagram of the KEYBOARD Unit

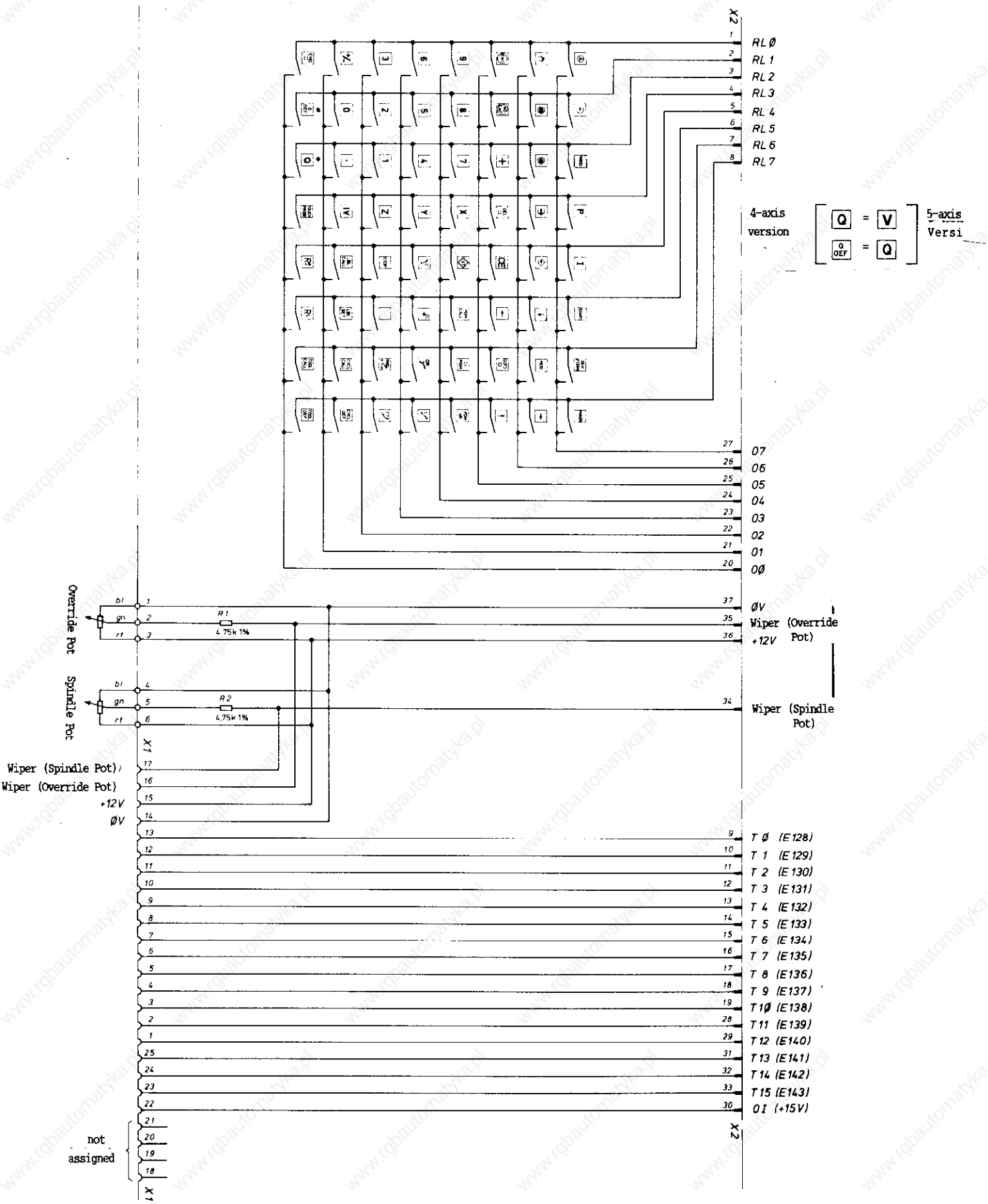

6.3 Testing the KEYBOARD Unit

Safe and fast testing of the KEYBOARD Unit is possible by means of a KEYBOARD TEST UNIT. The KEYBOARD TEST UNIT is connected to the **X 23** connection of the LE.

On the KEYBOARD TEST Unit the **key code**, the input states of the inputs **E 128** to **E 143** and **+12V** are displayed. In addition, the voltages for the inputs **E 128** to **E 143** as well as the wiper voltage for the **override** or **spindle potentiometer (approx 0 - 11.5V)** can be measured.

With switched-on **LE** and pressing a key the respective LEDs **RL** and **Out** illuminate. The **key code** can be compared to the tables, pages 38 to 40.

If no KEYBOARD TEST UNIT is available the contacts of the keys can also be measured with an ohmmeter at the connector.

6.3.1 KEYBOARD TEST UNIT Connection

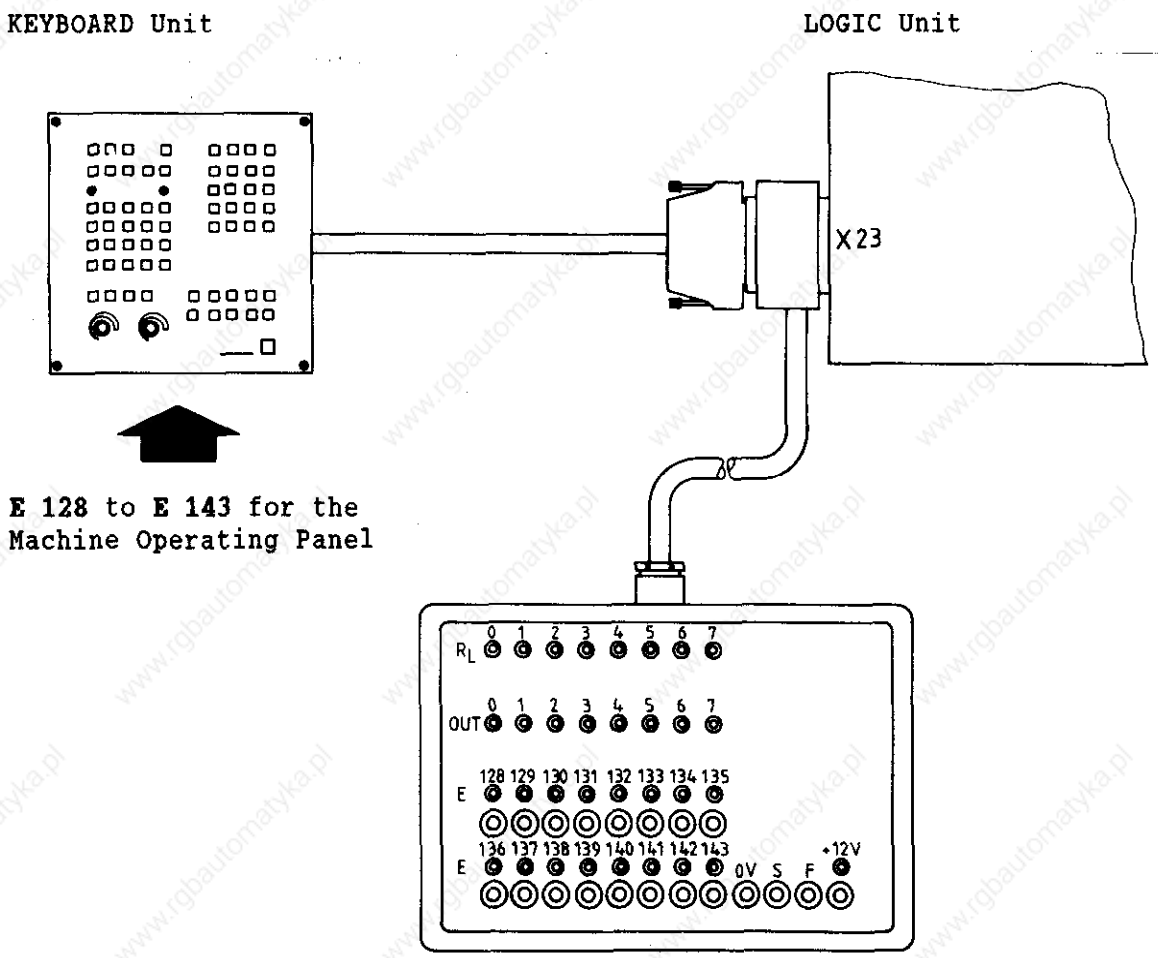

KEYBOARD TEST UNIT

6.4 Key Matrix

X2 Pin	1	2	3	4	5	6	7	8	20	21	22	23	24	25	26	27
Key	RL0	RL1	RL2	RL3	RL4	RL5	RL6	RL7	O0	O1	O2	O3	O4	O5	O6	O7
PGM NR								⊕					⊕			
CL PGM							⊕						⊕			
PGM CALL						⊕							⊕			
CR																
L								⊕				⊕				
							⊕					⊕				
RND							⊕				⊕					
CT								⊕			⊕					
CC						⊕						⊕				
C					⊕							⊕				
MOD							⊕								⊕	
BLK FORM							⊕									⊕
MAGN								⊕								⊕
START						⊕										⊕
	⊕														⊕	
		⊕													⊕	
			⊕												⊕	
				⊕											⊕	
					⊕										⊕	
	⊕															⊕
		⊕														⊕
MOD			⊕													⊕
P				⊕												⊕
I					⊕											⊕

X2 Pin	1	2	3	4	5	6	7	8	20	21	22	23	24	25	26	27
Key	RL0	RL1	RL2	RL3	RL4	RL5	RL6	RL7	O0	O1	O2	O3	O4	O5	O6	O7
EXT					⊕								⊕			
TOUCH PROBE				⊕					⊕							
DEL □				⊕										⊕		
✛			⊕											⊕		
	⊕													⊕		
GOTO □							⊕							⊕		
↓						⊕									⊕	
↑								⊕						⊕		
←						⊕								⊕		
→								⊕							⊕	
STOP					⊕						⊕					
CYCL DEF								⊕		⊕						
CYCL CALL							⊕			⊕						
LBL SET						⊕				⊕						
LBL CALL					⊕					⊕						
NO ENT		⊕												⊕		
TOOL DEF								⊕	⊕							
TOOL CALL							⊕		⊕							
RL						⊕			⊕							
RR					⊕				⊕							

X2 Pin	1	2	3	4	5	6	7	8	20	21	22	23	24	25	26	27
Key	RL0	RL1	RL2	RL3	RL4	RL5	RL6	RL7	O0	O1	O2	O3	O4	O5	O6	O7
X				⊕									⊕			
7			⊕										⊕			
8		⊕											⊕			
9	⊕												⊕			
Y				⊕								⊕				
4			⊕									⊕				
5		⊕										⊕				
6	⊕											⊕				
Z				⊕							⊕					
1			⊕								⊕					
2		⊕									⊕					
3	⊕										⊕					
IV				⊕						⊕						
0		⊕								⊕						
.			⊕							⊕						
+/-	⊕									⊕						
CE					⊕									⊕		
* V Q			⊕						⊕							
* Q Q DEF		⊕							⊕							
END □	⊕								⊕							

* Key assignment for 5-axis-version

7. DISPLAY Unit BE 212/412

7.1 DISPLAY Unit for TNC 351

BE 212 Id.no. 242 370 01

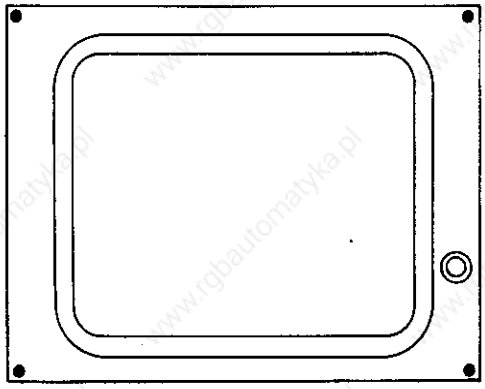

7.2 DISPLAY Units for TNC 355

BE 412 Id.no. 237 657 01

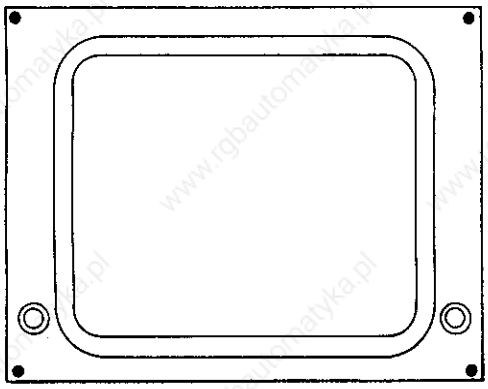

discontinued type

BE 412 B Id.no. 241 845 01

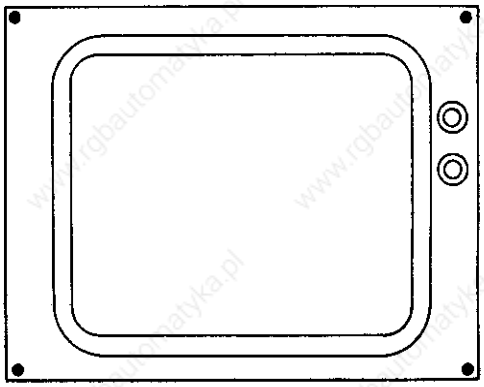

current type

7.3 Testing the DISPLAY Unit

BE 412
If the machine is switched on and the DISPLAY Unit remains dark check the mains fuse (mains fuse integrated with voltage selector at rear of **DISPLAY Unit**) and replace, if necessary.

If the fuse is in order you can check with the TNC 355 whether the fault is on the **DISPLAY Unit** or on the LE by disconnecting the plug-and-socket connection.

With disconnected plug and switched-on display a bright, rectangular field has to be displayed.

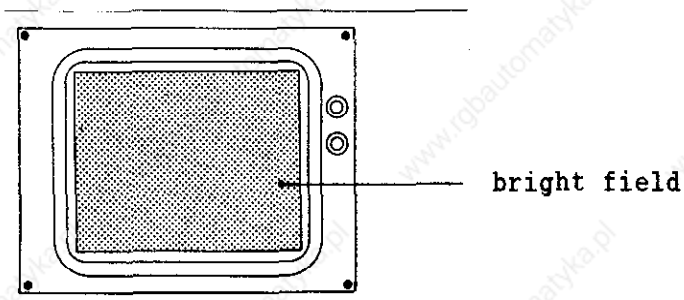

If the screen displays this field the CLP PROCESSOR Board in the LOGIC Unit might be defective.

If, however, the display remains dark with plug disconnected the display is defective and has to be exchanged.

BE 212
This test cannot be carried out with the TNC 351 since the DISPLAY Unit of this control does not have its own mains supply.

The voltage is supplied by the LOGIC Unit and can be checked with a voltmeter at connector **X9** (pin 1, 8 and 11 **0V**, pin 2 and 4 **+12V**).

The control signals for the TNC 351 and the TNC 355 Display Unit can only be checked with an oscilloscope and must correspond to the following diagrams. With diagrams for VIDEO and BRIGHT/DARK, deviations may occur in the time base in the figures shown.

As to connector layout, see section 4.3.4.

7.3.1 Timing Diagrams LE 351 with BE 212

X 9 Connector Timing Diagrams

V-SYNC pin 9

2V/DIV

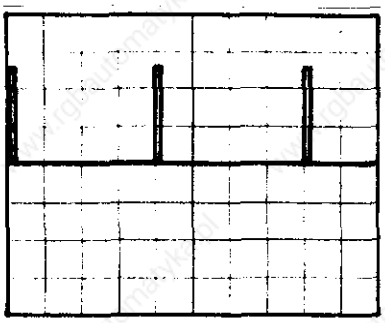

5ms/DIV

H-SYNC pin 10

2V/DIV

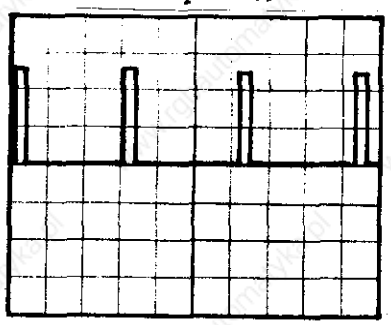

20µs/DIV

BRIGHT/DARK pin 12

2V/DIV

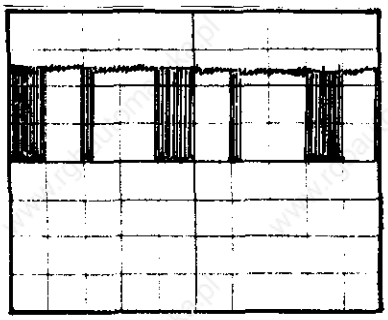

5ms/DIV

VIDEO pin 13

2V/DIV

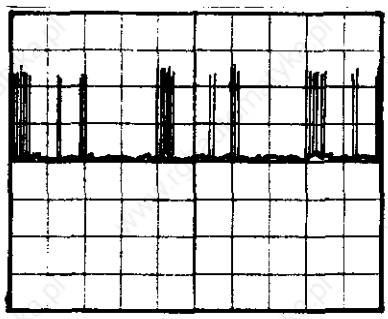

5ms/DIV

7.3.2 Timing diagrams LE 355 with BE 412

V-SYNC pin 9

2V/DIV

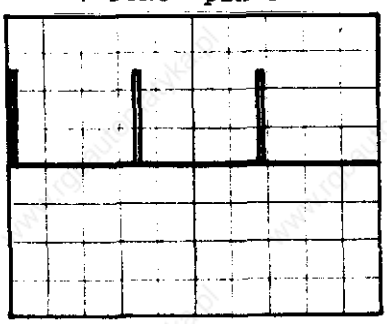

5ms/DIV

H-SYNC pin 10

2V/DIV

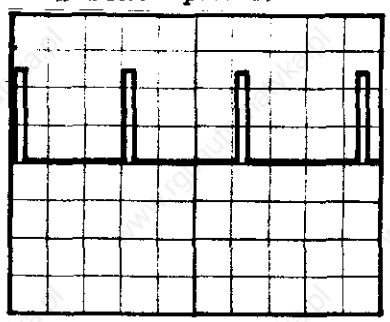

10µs/DIV

BRIGHT/DARK pin 12

2V/DIV

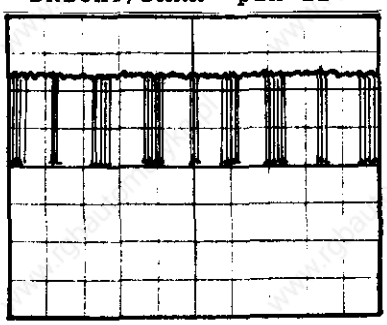

5ms/DIV

VIDEO pin 13

2V/DIV

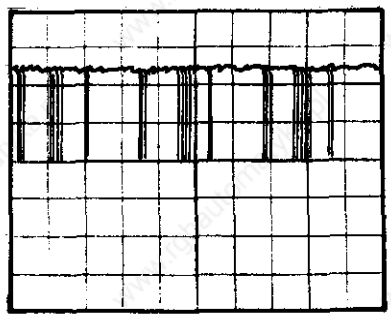

5ms/DIV

8. Measuring Systems

8.1 Error Messages

TRANSDUCER X DEFECT **A**	= signal amplitude fault

TRANSDUCER X DEFECT **B**	= signal frequency fault

8.2 Possible Fault Cause

- Glass scale dirty or damaged
- Scanning head damaged or defective
- Cable damaged
- Encoder input in the LOGIC Unit (LE) defective

8.3 Testing the Measuring Systems

Encoders can be interchanged with each other at the LOGIC Unit (X1...X5 refer to section 4.3.1 LOGIC Unit Connections) which allows you to determine whether the encoders or the encoder inputs of the LOGIC Unit is defective. In conjunction with the above procedure the respective machine parameters have to be changed when interchanging encoders at the LOGIC Unit (LE).

Function		**MP**	**Input value**
Axis allocation to the encoder inputs	X	253	0 ≙ standard allocation
	Y	254	1 ≙ encoder input X1
	Z	255	2 ≙ encoder input X2
	IV	256	3 ≙ encoder input X3
	V	257	4 ≙ encoder input X4
			5 ≙ encoder input X5
			6 ≙ encoder input X6 (only with V-axes-version)

Procedure with an error message
e.g. "ENCODER X DEFECTIVE B"

- Switch off main switch
- Exchange X-axis of encoder, e.g. with the Y-axis at the LOGIC Unit
- Switch on main switch
- Call machine parameters with the error message "POWER INTERRUPTED" with key number 95148 and exchange the input values from machine parameter **253** and **254**. If the input value for the machine parameters is 0 the machine parameter **253** has to be programmed with **2** and **254** with **1**.
- Enter machine parameters and switch on machine as usual.

If the same error message "ENCODER X DEFECTIVE" appears the error is due to the **encoders** or the **extension cable**. If the error message changed from **"X"** to **"Y"**, however, the encoder input of the LOGIC Unit is defective.

If the reference pulse inhibit (connector X10) is used and if positioning should occur with exchanged encoders also the reference pulse inhibit for the respective axes must be exchanged.

8.3.1 Electrically Checking the Scanning Head of the Measuring System

To determine if the measuring system is at fault the following test equipment is used:
- phase angle measuring unit (**PWM**) with/without oscilloscope
- high-resistance short circuit tester

If no phase angle measuring unit is available an ohmmeter can be used to electrically test the state of the cable, the lamp and the photoelements of a measuring system by taking the following measurements at the connector of the measuring system:

- Connector housing of measuring system with machine housing ≤ 1 Ω (outer shielding)
- Connector housing of measuring system with pin 9 (inner screen - outer screen) R = ∞
- Connector housing of measuring system with pin 1 to 8 (outer screen - signal lines) R = ∞
- Pin 9 with pin 1 to pin 8 (inner screen - signal lines) R = ∞

- Pin 1 with pin 2 0°
- Pin 2 with pin 1 0° (change poles of ohmmeter)
- Pin 5 with pin 6 90°
- Pin 6 with pin 5 90° (change poles of ohmmeter
- Pin 7 with pin 8 RI 1)
- Pin 8 with pin 7 RI 1) (change poles of ohmmeter)

The measured values should be approximately the same.

- Pin 3 with pin 4 La (approx. 5 - 30 Ω)

1) With measuring systems having an adjustable reference mark different values or no resistances are measured depending on the type of activation.

Diagram of measuring system with sine-wave output signals

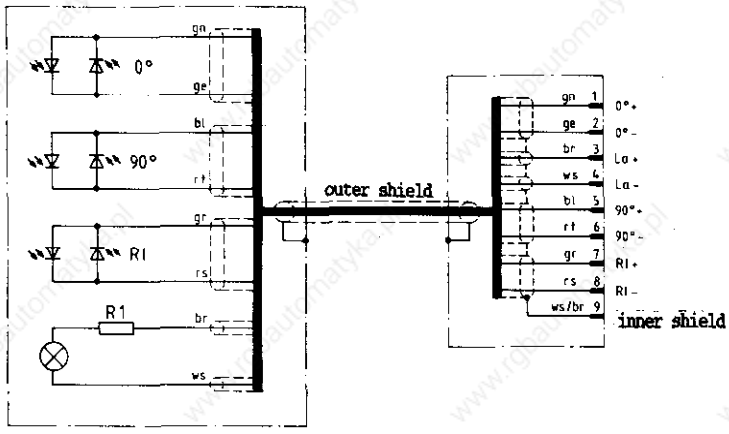

Measuring systems with square-wave output signals can **only** be tested with a phase angle measuring unit (**PWM**).

9. Handwheel

9.1 Overview

9.1.1 Handwheels with sine signal

HR 150 Id.no. 217 978 --

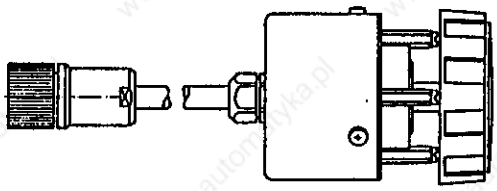

HR 250 Id.no. 217 977 --

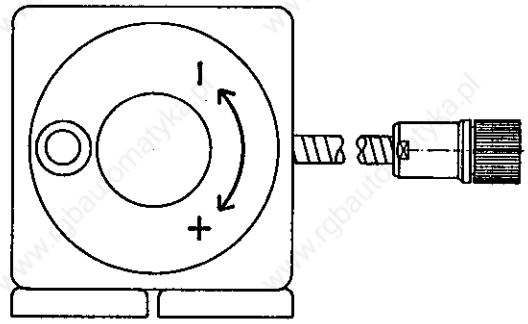

9.1.2 Serial Handwheels

HR 130 Id.no. 254 040 --
HR 130.001 Id.no. 249 371 --

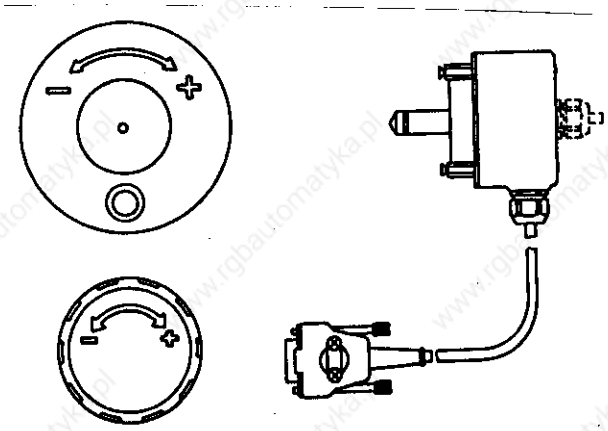

HR 330 Id.no. 251 534 --

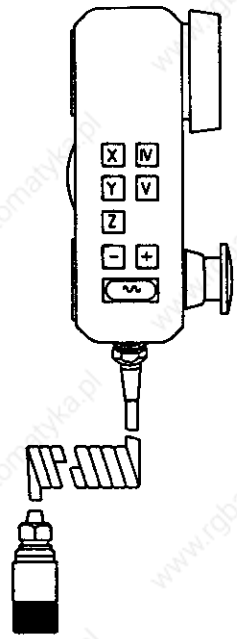

9.2 Checking the Handwheel

9.2.1 Handwheel with sine input

The **HR 150**, resp. the **HR 250 Handwheel** can be electrically checked as an encoder, but without reference pulse, however.

9.2.2 Seriel Handwheel

The serial HR 130, resp. the HR 330 Handwheel can only be checked with an oscilloscope. The control signals (X11 pin6 = DTR, pin 8 = RxD) must correspond to the following diagram.
The Handwheel is supplied by the Logic Unit (X11 pin 2 = 0V, pin 4 = +12V).

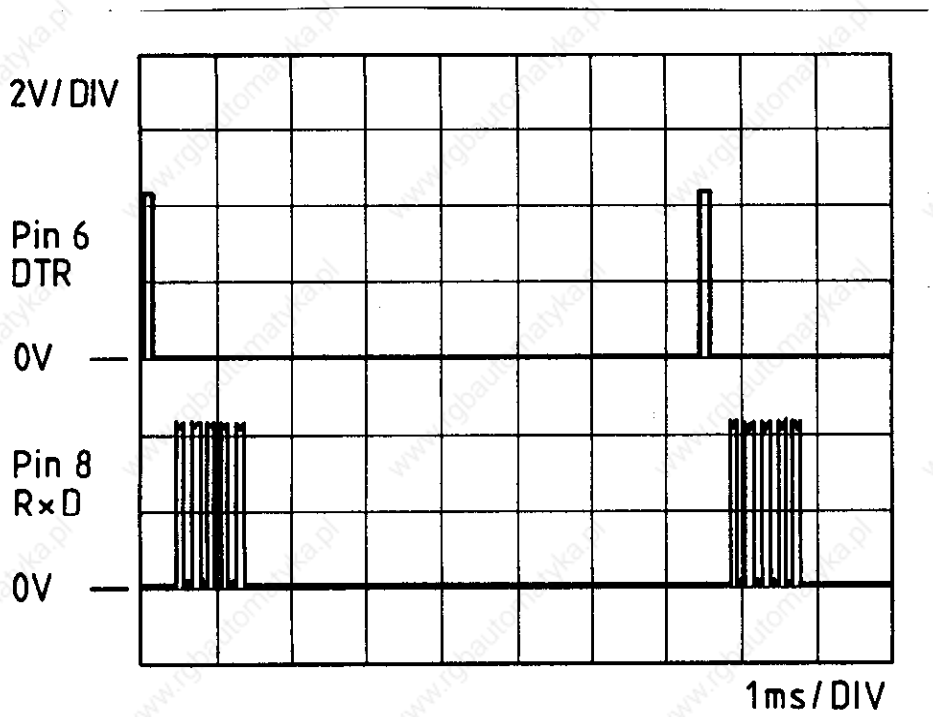

Diagram measured at the X11 Logic Unit.

10. 3D-Touch Probe

10.1 Overview

10.1.1 Touch Probe with an external Interface Electronics (APE)

TS 111 Id.no. 237 400 --
with cable connection

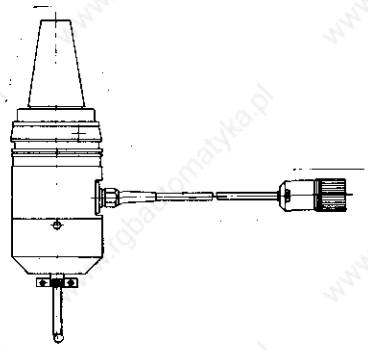

TS 511 Id.no. 237 402 --
with infrared transmission

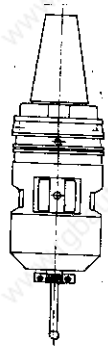

APE 110 Id.no. 230 465 -- for **TS 111**
APE 510 Id.no. 237 590 -- for **TS 511**
APE 511 Id.no. 237 586 -- for **TS 511** and additional connection for a second **SE 510**)

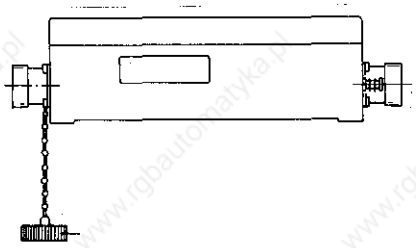

SE 510 Id.no. 230 473 --

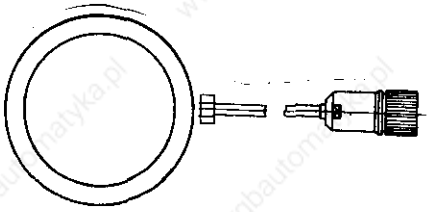

10.1.2 Touch Probe with integrated Interface Electronics (APE)

TS 120 Id.no. 243 614 --

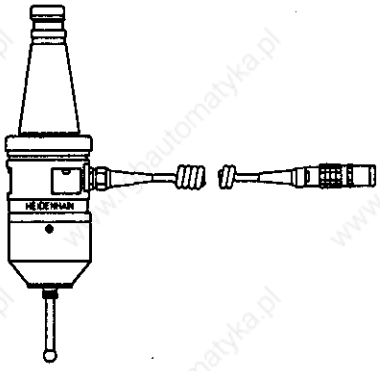

10.2 Error Messages

1. TOUCH POINT INACCESSIBLE

After starting a probe the probing point was not reached within the measuring path determined in machine parameter 216.

2. EXCHANGE TOUCH PROBE BATTERY

The battery voltage of the touch probe with infrared transmission remains below admissible level.

3. STYLUS ALREADY IN CONTACT

When starting a probe function, the stylus is already deflected.

4. PROBE SYSTEM NOT READY

The infrared transmission path between the "Touch Probe" and the "Transmit-Receive Unit" is obstructed (e.g. coolant film on probe windows) or is interrupted completely. The touch probe side with two windows has to be adjusted in the direction of transmit-receive unit.

11. RS-232-C/V.24 - Interface

11.1 Operating Modes ME-FE-EXT

The TNC 355 can be switched to 3 operating modes for data transmission as follows:

ME - To connect the **ME 101/ME 102** HEIDENHAIN Magnetic Tape Unit or other peripheral units. The **data format** (7 data bits, 1 stop bit, parity (even parity) and the **baud rate** (2400) are **adapted to the ME.**

FE - To connect the FE 401 HEIDENHAIN Floppy Disk Unit or other peripheral units. The data is transmitted with a special protocol (blockwise transfer) in order to backup data. The **data format** (7 data bits, 1 stop bit, parity (even parity), the **baud rate** (9600) and the **transmission protocol** is **adapted to the FE.**

EXT - To adapt data transmission in the standard data format and for blockwise transfer on external peripheral units. The interface for data transmission is adapted via the machine parameters, the baud rate is optional.

Peripheral units for the operating mode **EXT:**

Paper tape punch or paper tape reader
Printer or matrix printer for graphic printout
Mass storage or programming stations for "Blockwise Transfer"
Programming stations and PCs' for external programming

11.1.1 Changing Operating Modes ME-FE-EXT

Select auxiliary operating mode "MOD" with the [MOD]-key.
Press the [↓]-key or [MOD] several times until the **RS-232-C/V.24-INTERFACE** with the **ME-**, **FE-** or **EXT**-display appears.

Press the [ENT]-key until the required operating mode is displayed. Acknowledge the auxiliary operating mode with the [DEL]-key subsequently.

With graphic printout the operating mode **EXT** is automatically selected which is independent of the **ME** or **FE**-mode.

11.2 Selecting the Baud-Rate

Select auxiliary operating mode "MOD" with the [MOD]-key.
Press the [MOD]-key or [MOD] several times until **BAUD-RATE** is displayed.

Input new value for **BAUD-RATE**, if required (possible values: 110, 150, 300, 600, 1200, 4800, 9600, Baud) and enter with the [ENT]-key.
Acknowledge the auxiliary operating mode with the [DEL] key subsequently.

---

* with special HEIDENHAIN software

11.3 Connection Cable and Adapter for RS-232-C/V.24-Interface

Wiring diagram of the RS-232-C/V.24-Interface

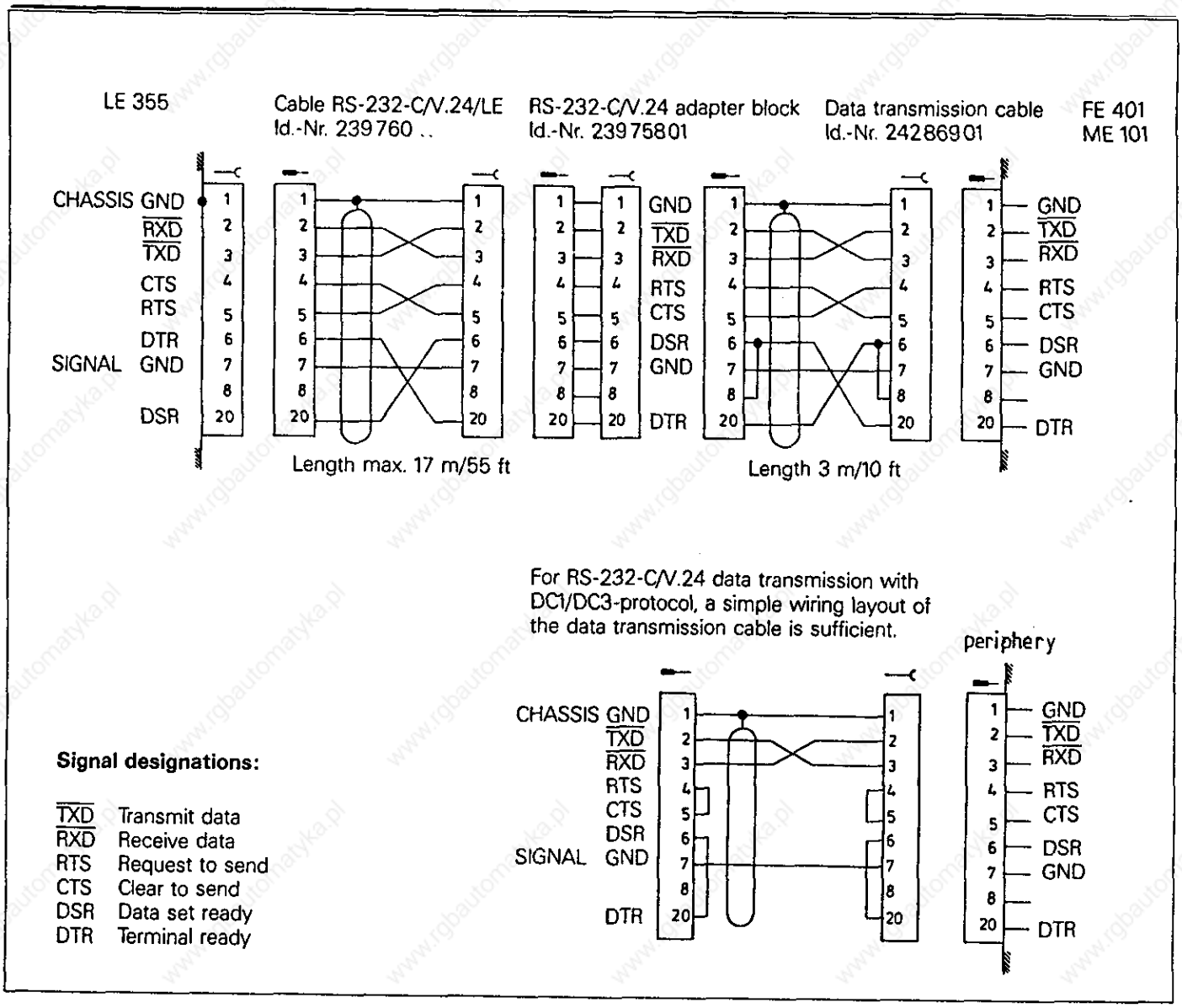

The data lines and control lines of the cable between LE 351/355 and the RS-232-C/V.24-adapter block (id.no. 239 760 ..) are crossed. At connector X26 of the LE 351/355 the layout is carried out according to a DTU (Data Transmission Unit). Owing to the crossed data and control lines of the cable between LE 351/355 and RS-232-C/V.24-adapter the layout of the RS-232-C/V.24-adapter corresponds to the DTE (Data Terminal Equipment). Thus the external units can be connected to the standard data transmission cable (id.no. 242 869 01) of HEIDENHAIN.

11.4 Machine Parameters for the RS-232-C/V.24-Interface

A precise description of the single machine parameters can be taken from the TNC Handbook for Machine Manufacturers, resp. from the information regarding the RS-232-C/V.24-data interface.

11.4.1 Machine Parameters for "Standard interface"

MP	Input values	Function
71	3	sign for prgr. end = ETX
92	Bit 0 0	decimal point
222	168	7 data bits, transmission stop by DC3, parity bit (even parity), 1 stop bit
223	0	standard interface

11.4.2 Machine Parameters for "Blockwise transfer"

MP	Input values	Function
71	515	sign for prgr. end = ETX sign for prgr. beginning = STX
218	17736	H and E
219	16712	H and A
220	279	ETB and SOH
221	5382	ACK and NAK
222	168	7 data bits, transmission stop by DC3, parity bit (even parity), 1 stop bit
223	1	Blockwise transfer
224	4	EOT

11.4.3 Machine Parameters for Graphic Printout

		E P S O N				BROTHER	HP	MANNESMANN
MP	**LQ500**	**LX800**	**LX85**	**FX100**	**FX800**	**1509**	**Thinkjet**	**Tally**
226	795	795	1819	1819	1819	1051	795	1819
227	16648	13078	17217	17217	17224	12301	16648	17224
228	0	0	6963	6963	6963	2560	0	6963
229	0	0	6154	7424	5624	0	0	5642
230	1546	1546	1546	1290	1546	1546	1546	1546
231	3355	6954	6954	6987	6954	3355	3355	6987
232	19200	13312	1024	2	1024	19200	19200	1280
233	512	512	512	0	512	512	512	512

When printing graphics the control automatically switches the operating mode to **EXT** and the data format to **8 data bits.**

11.5 Connection Cable for Printers

Simple wiring proved to be the right one for most printers (see page 50).

11.6 Error Messages

11.6.1 Displayed Error Messages in the ME-Operating Mode

WRONG OPERATING MODE

No or wrong operating mode on external data storage unit.

WRONG PROGRAM DATA

During data transmission defective program data were found. Reading was repeated three times by the magnetic tape and aborted subsequently.

DATA MEDIUM MISSING

No disk inserted in drive.

DATA MEDIUM EMPTY

On the data carrier (diskette) no programs are stored.

DATA MEDIUM WRITE-PROTECTED

Write-enable pin of cassette is missing.

PROGRAM INCOMPLETE

Data transmission was aborted before the program was completely transmitted.

EXT. IN-/OUTPUT NOT READY

DSR-signal of TNC is missing.
- ME not connected.
- defective transmission cable.

11.6.2 Displayed Error Messages of the TNC in the FE-Operating Mode

In this operating mode errors are output by the Floppy Disk Unit in the following form:
ERR: (SP) (SP) XXX (CR) (XXX = error number)

The following errors can be displayed on the screen:

ERR: 001 Wrong instruction code (e.g. wrong machine parameters for control character)

ERR: 002 Illegal program name (monitor operation)

ERR: 003 Faulty data transmission

ERR: 004 Incomplete program on diskette

ERR: 010 Program not on diskette

ERR: 011 Program is protected against erasure

ERR: 012 Program is being stored

ERR: 013 Diskette directory is full

ERR: 014 Diskette is full

ERR: 100 Diskette not formatted

ERR: 102 Drive not ready

ERR: 103 Diskette is write-protected

ERR: 104 Faulty data on diskette

ERR: 105 Section cannot be found (e.g. unformatted diskette is to be described)

ERR: 106
ERR: 107 Electronic error in the FE
ERR: 108

11.6.3 Error Messages at the ME

The ME-electronics as well as the external operating conditions are tested. Detected errors are displayed as **flashing** codes by the operating mode indicating lamps. Error descriptions can be found in the following table:

○ LED - off ✹ LED - flashing

Indicating lamps	Error message
○ ○ ○ ✹ ○ ○ ○ ○	Faulty data during transmission
○ ○ ✹ ○ ○ ○ ○ ○	Cassette is not inserted
○ ○ ✹ ✹ ○ ○ ○ ○	Write-protection pin in cassette is missing
○ ✹ ○ ○ ○ ○ ○ ○	Wrong operating mode selected
○ ✹ ○ ✹ ○ ○ ○ ○	Data from magnetic tape defective
○ ✹ ✹ ○ ○ ○ ○ ○	Magnetic tape blank
✹ ○ ○ ○ ○ ○ ○ ○	Electronic fault in ME
✹ ○ ○ ✹ ○ ○ ○ ○	
✹ ○ ✹ ○ ○ ○ ○ ○	
✹ ○ ✹ ✹ ○ ○ ○ ○	
✹ ✹ ○ ○ ○ ○ ○ ○	
✹ ✹ ○ ✹ ○ ○ ○ ○	
✹ ✹ ✹ ✹ ○ ○ ○ ○	Tape end
○ ✹ ✹ ✹ ○ ○ ○ ○	Peripheral unit is not connected
✹ ✹ ✹ ○ ○ ○ ○ ○	Data transfer between TNC and ME (or peripheral unit) interrupted by pressing the [DEL] -key

By pressing the [STOP] -key the error messages can be erased.

11.6.4 Error Messages at the FE in the ME-mode

In the ME-mode errors are displayed as flashing codes by the operating modes indicating lamps.

○ LED - off ● LED - on ✹ LED - flashing

Indicating lamps	Error messages
○ ○ ○ ● ○ ✹ ○ ○	Diskette is missing or electronic error
○ ○ ○ ✹ ○ ● ○ ○	Diskette cannot be formatted since diskette is accessed
✹ ○ ○ ● ✹ ○ ○ ○	Diskette is missing or not formatted
✹ ○ ○ ✹ ✹ ○ ○ ○	Diskette cannot be copied since writing and reading is active
● ○ ✹ ● ○ ○ ○ ○	External unit not ready or not connected
✹ ○ ● ● ○ ○ ○ ○	Diskette is missing or not formatted
✹ ○ ○ ● ○ ○ ● ○	Diskette is missing or not formatted or no program available
✹ ○ ● ✹ ○ ○ ○ ○	Program cannot be output since a transmission is active via a TNC-interface
✹ ○ ○ ✹ ○ ○ ● ○	Program cannot be output since a transmission is active via a PRT-interface
○ ○ ✹ ● ● ○ ○ ○	External unit not ready or not connected
○ ○ ● ● ✹ ○ ○ ○	Diskette is missing or not formatted
○ ○ ○ ● ✹ ○ ● ○	Diskette is missing or not formatted
○ ○ ● ✹ ✹ ○ ○ ○	Program cannot be stored since a transmission is active via a TNC-interface
○ ○ ○ ✹ ✹ ○ ● ○	Program cannot be stored since a transmission is active via a PRT-interface
○ ● ○ ● ○ ○ ✹ ○	External unit not ready or not connected
○ ✹ ○ ● ○ ○ ● ○	Diskette is missing or electronic error
○ ✹ ○ ✹ ○ ○ ● ○	Directory cannot be output since a transmission is active via a PRT-interface
○ ○ ○ ✹ ○ ○ ● ○	A coupling of the interfaces is not possible since a transmission is active via the TNC-interface
○ ○ ● ✹ ○ ○ ○ ○	A coupling of the interfaces is not possible since a transmission is active via the PRT-interface
○ ○ ✹ ● ○ ○ ○ ○	External unit not ready or not connected

By pressing the STOP-key the error messages can be erased.

12. External Data I/O

12.1 External Data Output

- Connect external data storage unit (**ME**, **FE** or **EXT**) to the TNC.
- Prepare external data storage unit for data transmission:
  with the **ME** by pressing the STOP, TNC and the →0/8-keys.
  with the **FE** by pressing the STOP-key.
- Select operating mode of the interface (**ME**, **FE** or **EXT**) at the TNC (see section 11.1.1). Also select baud rate with the operating mode **EXT**. (see section 11.2).

12.1.1 Output of Machine Parameters to the ME

Dialog display	Press key
MANUAL OPERATION	MOD
VACANT BLOCKS = XXXX	↑
CODE NUMBER =	9 5 1 4 8 ENT
MACHINE PARAMETER PROGRAMMING MACHINE PARAMETER MP Ø ?	EXT
EXTERNAL DATA INPUT ?	NO ENT
EXTERNAL DATA OUTPUT	
MANUAL OPERATION	

12.1.2 Output of Machine Parameters to the FE

Dialog display	Press key
MANUAL OPERATION	MOD
VACANT BLOCKS = XXXX	↑
CODE NUMBER =	9 5 1 4 8 ENT
MACHINE PARAMETER PROGRAMMING MACHINE PARAMETER MP Ø ?	EXT
EXTERNAL DATA INPUT ?	NO ENT
PROGRAM NUMBER =	Input program number requested under which the machine parameters are to be output and acknowledge with the ENT-key.
EXTERNAL DATA OUTPUT	
MANUAL OPERATION	

12.1.3 Output of the PLC-Program to the ME

Dialog display	Press key
MANUAL OPERATION	MOD
VACANT BLOCKS = XXXX	↑
CODE NUMEBR =	9 5 1 0 2 6 ENT
TABELLE E/A/Z/T/M	⇔
PC-EDITIER-FUNKTION	(EXT)[1] (GOTO □ 2 0 4 8 ENT EXT)[2]
EXTERN EIN/AUS ? ENT/NO-ENT	NO ENT
AUSGABE ASC/BIN ? ENT/NO-ENT	ENT
AUSGABE AB PGM-ZEILE = Ø	(ENT)[1] (2 0 4 8 ENT)[2]
AUSGABE BIS PGM-ZEILE = Ø	(2 0 4 7 ENT)[1] (3 0 7 1 ENT)[2]
EXTERNAL DATA OUTPUT	
QUERVERWEIS-LISTE ?	NO ENT
PC-EDITIER-FUNKTION	END □
MANUAL OPERATION	

1) with output of 1st and 2nd kByte
2) with output of 3rd kByte

12.1.4 Output of the PLC-Program to the FE

Dialog display	Press key
MANUAL OPERATION	MOD
VACANT BLOCKS = XXXX	↑
CODE NUMBER =	9 5 1 0 2 6 ENT
TABELLE E/A/Z/T/M	⇔
PC-EDITIER-FUNKTION	(EXT)[1] (GOTO 2 0 4 8 ENT EXT)[2]
EXTERN EIN/AUS ? ENT/NO-ENT	NO ENT
AUSGABE ASC/BIN ? ENT/NO-ENT	ENT
AUSGABE AB PGM-ZEILE = Ø	(ENT)[1] (2 0 4 8 ENT)[2]
AUSGABE BIS PGM-ZEILE = Ø	(2 0 4 7 ENT)[1] (3 0 7 1 ENT)[2]
PROGRAM NUMBER =	Input program number requested under which the PLC-program is to be output and enter with the ENT-key.
EXTERNAL DATA OUTPUT	
PC-EDITIER-FUNKTION	END
MANUAL OPERATION	

[1] with output of 1st and 2nd kByte
[2] with output of 3rd kByte

12.1.5 Output of all NC-Programs to the ME or the FE

Dialog display	Press key
MANUAL OPERATION	⇔
PROGRAMMING AND EDITING	EXT
PROGRAMMING AND EDITING SELECTION = ENT/END = NOENT	
READ-IN SELECTED PROGRAM	↓
READ-OUT SELECTED PROGRAM	↓
READ-OUT ALL PROGRAMS	ENT
EXTERNAL DATA OUTPUT	
PROGRAMMING AND EDITING	

12.1.6 Output of the compensation value list to the ME

Dialog display	Press key
MANUAL OPERATION	MOD
VACANT BLOCKS = XXXX	↑
CODE NUMBER =	1 0 5 2 9 6 ENT
COMPENSATION VALUE LIST DEFECTIVE AXIS ?	EXT
EXTERNAL DATA INPUT ?	NO ENT
EXTERNAL DATA OUTPUT	
COMPENSATION VALUE LIST	END
MANUAL OPERATION	

12.1.7 Output of the correction list to the FE

Dialog display	Press key
MANUAL OPERATION	MOD
VACANT BLOCKS = XXXX	↑
CODE NUMBER =	1 0 5 2 9 6 ENT
COMPENSATION VALUE LIST DEFECTIVE AXIS ?	EXT
EXTERNAL DATA INPUT ?	NO ENT
PROGRAM NUMBER =	Enter the requested program number under which the compensation value list is to be output and acknowledge with the key ENT.
EXTERNAL DATA OUTPUT	
COMPENSATION VALUE LIST	END
MANUAL OPERATION	

12.2 External Data Input

- Connect external data storage unit (**ME**, **FE** or **EXT**) to the TNC.
- Prepare external data storage unit for the data transmission:
  with the **ME** by pressing the STOP, TNC and the →g -keys.
  with the **FE** by pressing the STOP -key.
- Adjust operating mode of the interface (**ME**, **FE** or **EXT**) at the TNC. (see section 11.1.1). Also select baud rate with the operating mode **EXT**. (see section 11.2).

12.2.1 Machine parameter input from the ME with erased memory

Dialog display	Press key
OPERATING PARAMETERS ERASED	CE
PLC: PROGRAM MEMORY ERASED	CE
MACHINE PARAMETER PROGRAMMING MACHINE PARAMETER MP Ø ?	EXT
EXTERNAL DATA INPUT	

*

12.2.2 Machine parameter input from the FE with erased memory

Dialog display	Press key
OPERATING PARAMETERS ERASED	CE
PLC: PROGRAM MEMORY ERASED	CE
MACHINE PARAMETER PROGRAMMING MACHINE PARAMETER MP Ø ?	EXT
PROGRAM NUMBER =	Input program number under which the machine parameters are stored and transfer with the ENT -key
EXTERNAL DATA INPUT	

*

* After reading in the machine parameters "POWER INTERRUPTION" usually appears in the dialog display; if, however, the error message "MACHINE PARAMETERS INCOMPLETE" appears, fewer machine parameters are stored on the external data storage unit than required by the TNC. In this case the remaining machine parameters have to be entered manually.

  These machine parameters can be obtained by the machine manufacturer.

12.2.3 Input of Machine Parameters from the ME with not-erased Memory
(the machine parameters in the memory are overwritten)

Dialog display	Press key
MANUAL OPERATION	MOD
VACANT BLOCKS = XXXX	↑
CODE NUMBER =	9 5 1 4 8 ENT
MACHINE PARAMETER PROGRAMMING MACHINE PARAMETER MP 0 ?	EXT
EXTERNAL DATA INPUT ?	ENT
EXTERNAL DATA INPUT	

*

12.2.4 Input of Machine Parameters from the FE with non-erased Memory
(the machine parameters in the memory are overwritten)

Dialog display	Press key
MANUAL OPERATION	MOD
VACANT BLOCKS = XXXX	↑
CODE NUMBER =	9 5 1 4 8 ENT
MACHINE PARAMETER PROGRAMMING MACHINE PARAMETER MP 0 ?	EXT
EXTERNAL DATA INPUT ?	ENT
PROGRAM NUMBER =	Input program number under which the machine parameters are stored and transfer with the ENT-key
EXTERNAL DATA INPUT	

*

* After reading in the machine parameters "MANUAL OPERATION" usually appears in the dialog display; if, however, the error message "MACHINE PARAMETERS INCOMPLETE" appears fewer machine parameters are stored on the external data storage unit than required by the TNC. In this case the remaining machine parameters have to be entered manually.

These machine parameters can be interrogated by the machine manufacturer.

12.2.5 Input of the PLC-Program from the ME

Dialog display	Press key
MANUAL OPERATION	MOD
VACANT BLOCKS = XXXX	↑
CODE NUMBER =	9 5 1 0 2 6 ENT
TABELLE E/A/Z/T/M	⇨
PC-EDITIER-FUNKTION	(EXT)[1] (GOTO □ 2 0 4 8 ENT EXT)[2]
EXTERN EIN/AUS ? ENT/NO-ENT	ENT
EINGABE AB PGM-ZEILE = 0	(ENT)[1] (2 0 4 8 ENT)[2]
EXTERNAL DATA INPUT	
PC-EDITIER-FUNKTION	END □
MANUAL OPERATION	

12.2.6 Input of the PLC-Program from the FE

Dialog display	Press key
MANUAL OPERATION	MOD
VACANT BLOCKS = XXXX	↑
CODE NUMBER =	9 5 1 0 2 6 ENT
TABELLE E/A/Z/T/M	⇨
PC-EDITIER-FUNKTION	(EXT)[1] (GOTO □ 2 0 4 8 ENT EXT)[2]
EXTERN EIN/AUS ? ENT/NO-ENT	ENT
EINGABE AB PGM-ZEILE = 0	(ENT)[1] (2 0 4 8 ENT)[2]
PROGRAM NUMBER =	Input program number under which the PLC-program is stored and transfer with the ENT -key
EXTERNAL DATA INPUT	
PC-EDITIER-FUNKTION	END □
MANUAL OPERATION	

1) with input of 1st and 2nd kByte

2) with input of 3rd kByte

12.2.7 Input of NC-Programs from the ME or FE

Dialog display	Press key
MANUAL OPERATION	
PROGRAMMING AND EDITING	EXT
PROGRAMMING AND EDITING SELECTION = ENT/END = NOENT	
READ-IN SELECTED PROGRAM	↑
READ-IN PROGRAM OFFERED	↑
READ-IN ALL PROGRAMS	ENT
EXTERNAL DATA INPUT	
PROGRAMMING AND EDITING	

12.2.8 Input of compensation value list from the ME

Dialog display	Press key
MANUAL OPERATION	MOD
VACANT BLOCKS = XXXX	↑
CODE NUMBER =	1 0 5 2 9 6 ENT
COMPENSATION VALUE LIST DEFECTIVE AXIS ?	EXT
EXTERNAL DATA INPUT ?	ENT
EXTERNAL DATA INPUT ?	
COMPENSATION VALUE LIST	END
MANUAL OPERATION	

12.2.9 Input of the compensation value list from the FE

Dialog display	Press key
MANUAL OPERATION	MOD
VACANT BLOCKS = XXXX	↑
CODE NUMBER =	1 0 5 2 9 6 ENT
COMPENSATION VALUE LIST DEFECTIVE AXIS ?	EXT
EXTERNAL DATA INPUT ?	ENT
PROGRAM NUMBER =	enter the program number under which the compensation value list is stored and acknowledge with the ENT-key.
EXTERNAL DATA INPUT	
COMPENSATION VALUE LIST	END
MANUAL OPERATION	

13. Analog Outputs

13.1 Technical Data

5 or 6 outputs X, Y, Z, IV, V and S Loading capacity: $R_{L\ min}$ = 5 kΩ
$C_{L\ max}$ = 5 nF

$U_{a\ max}$ = ± 10 V ± 0.25 V
$U_{a\ min}$ = 0 V ± 1 mV

Resolution 12 Bit ≙ 4095 steps

$$\text{Smallest step} = \frac{U_{a\ max}}{4095\ \text{steps}} = \frac{10\ \text{V}}{4095} = 2.44\ \text{mV}$$

13.2 Measuring the Analog Output Voltages

Proportional to the traversing speed the control outputs an analog voltage of **0V** (axis standstill) to **9V** (rapid traverse). This voltage can simply be measured with the ANALOG OUTPUT TEST ADAPTER directly at the LOGIC Unit or at the connecting terminals of the servo amplifier with a voltmeter.

If, however, no axis movement takes place due to a defect and if it is to be checked whether the error is due to the control or to an external unit proceed as follows:

- Switch off mains switch at machine.
- Connect ANALOG OUTPUT TEST ADAPTER to connector **X8** (nominal value output) of the **LE** and connect voltmeter at the ANALOG OUTPUT TEST ADAPTER to the sockets of the defective axis. If no ANALOG OUTPUT TEST ADAPTER is available then connect voltmeter directly to the nominal value input of the servo amplifier.
- Switch on main switch and control voltage.
- Switch position display to **LAG** (trailing error).
- Check or adjust the following machine parameters (note original input values when changing machine parameters and input them after checking).

MP	Input value	Function
174	100 (mm)	Trailing error supervision EMERGENCY-STOP
234	9.99 (V)	Movement supervision

- Sequentially traverse over those reference marks that have to be traversed over before that of the defective axis.
- Turn back completely override potentiometer of the KEYBOARD Unit and start reference mark approach for the defective axis.
- Check axis release for defective axis at servo amplifier.
- Check display
  (Control in operation) has to be on, **F** has to illuminate as usual with the feed display (not inverse F) and with the position display **no** point must illuminate after the axis designation (e.g. **X.**).
- Turn override potentiometer to the right and turn back again before the trailing error display reaches the position supervision limit (MP 174).

The control outputs an analog voltage when turning the override potentiometer to the right and increases this voltage proportionally to the trailing error up to maximally 10V. If a voltage of 10V ± 0.25V is measured with a voltmeter at the ANALOG OUTPUT TEST ADAPTER the control is in order. If, however, **no** voltage is measured then switch off mains switch, unplug connector **X8** of the **LE**, remove the wire to the nominal value line at servo drive and check for short circuit. If the nominal value line is in order reconnect connector **X8** to the **LE** (leave nominal value line at servo amplifier unconnected), switch on mains switch and repeat measurement by approaching the reference mark. If an analog voltage is measured the control is in order. If, however, no voltage is measured the analog output of the **LE** is probably defective.

13.2.1 Set-up for Measuring the Analog Outputs

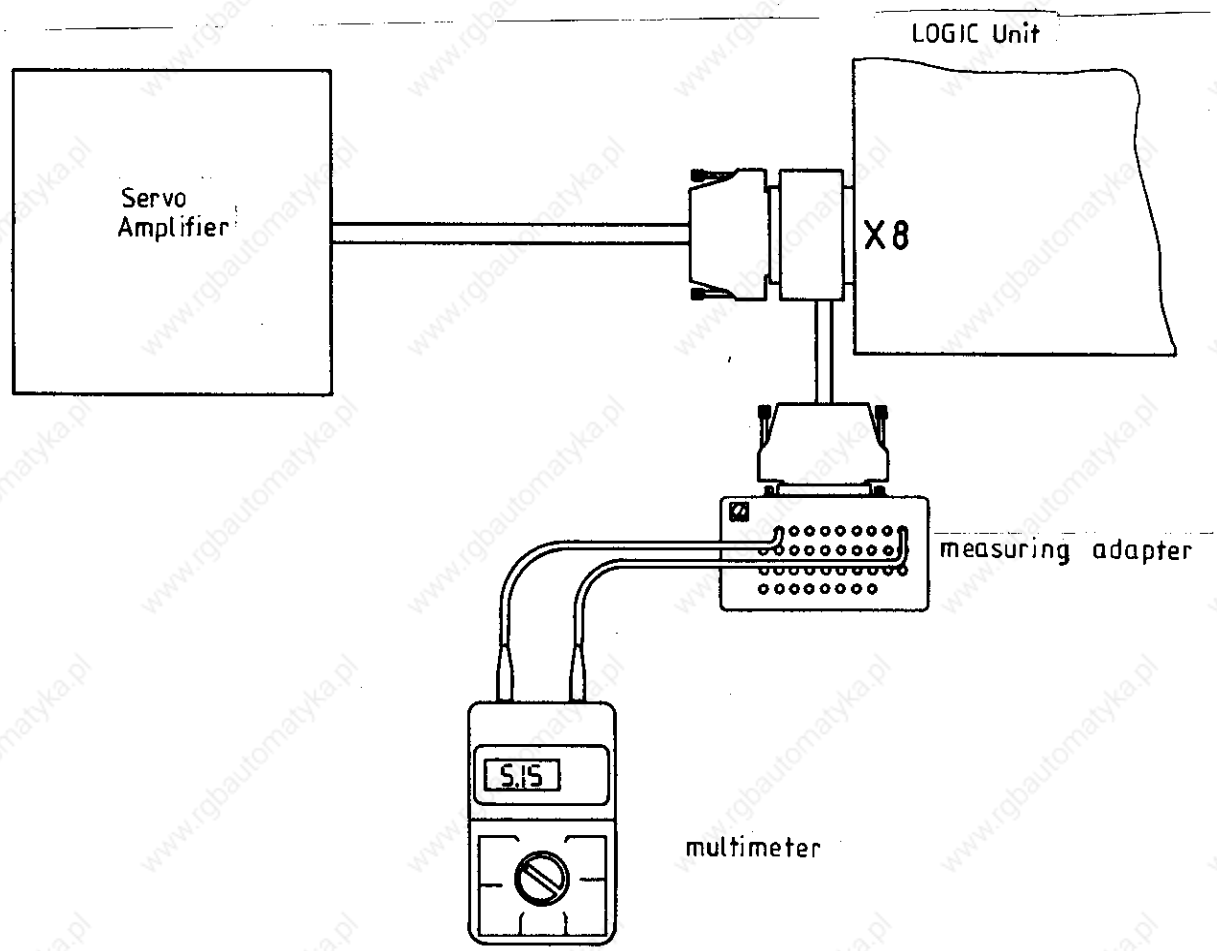

13.3 Changing Positional Display Mode

Select auxiliary operating mode "MOD" with the [MOD]-key.
Press the [↓] or the [MOD] -key several times until the POSITION DISPLAY appears.
Press the [ENT]-key, if necessary, until the requested display (**ACTL**, **REF**, **LAG**, **NOML** or **DIST**) appears.
Acknowledge the auxiliary operating mode with the [DEL]-key subsequently.

13.4 Speed Adjustment

Check and/or optimize machine parameters (**note original input values** when changing the machine parameters).

MP	Input value	Function
60	0	Speed precontrol on
65	0	Display step = 1µm

- Change positional display mode to **LAG** (trailing error display).

- Input the following test program.

e.g.
```
1 LBL 1
2 X 100   R0  F29999 M      (Select bigger traverse range if possible)
3 X 0     R   F      M
4 CALL LBL 1 REP 10
```

- Processing of test program in the operating mode "Program Run Full Sequence".

- Adjust speed at servo amplifier (tacho) such until the trailing error display possibly displays zero in both directions during positioning.

- Repeat adjustment for all axes.

- **Bring** machine parameters and positional display to **original state** again.

13.5 Offset Adjustment

13.5.1 Offset Adjustment with Key Number

- Select auxiliary operating mode "MOD" with the [MOD]-key and select key number with the [↑]-key.
- Input key number **75368** and transfer with the [ENT]-key.
  The converter steps (2.44mV) are now displayed for the offset on the display. If the [ENT]-key is now pressed the offset values are transferred into the offset memory and compensated. If instead of the [ENT]-key the [NO ENT]-key is pressed the offset memory is erased and the compensation is eliminated.
- Acknowledge the auxiliary operating mode with the [DEL]-key.

13.5.2 Automatic Cyclic Offset Adjustment

In machine parameter **252** the cycle time (20 ms units) is determined according to an existing offset which is compensated by one converter step (2.44mV).
If the automatic offset adjustment is to be switched off the machine parameter **252** has to be programmed with zero.

A T T E N T I O N !

If with the automatic offset adjustment an offset voltage of 100 mV is reached the control switches off with the error message **"GROSS POSITIONING ERROR E"**.

13.5.3 Offset Adjustment at the Servo Amplifier

- Check or adjust the following machine parameters (**note the original values** when changing machine parameters).

MP	Input value	Function
28, 29, 30, 31	0	Integral factor
32, 33, 34, 35, 332	> 0.5	Differential factor
60	0	Speed precontrol on
65	0	Display step = 1 µm
252	0	Cycle time for automatic offset adjustment

- Switch position display to **LAG** (trailing error display).
- Erase offset memory with key number **75368** (see section 13.5.1).
- Select operating mode [⊡] or [⊡] or [⊡].
- Adjust offset at servo amplifier until the individual axes display zero or oscillate symmetrically around zero.
- **Bring** machine parameters and position display to **original state** again.

14. PLC-I/O

14.1 Technical Data

14.1.1 PLC-Inputs of the LE

E0 up to **E31** to **X22**
E128 up to **E143** to **X23** and **X27**
E144 up to **E152** to **X27**

"0" U_e = - 20 V up to 3.2 V
I_e = 1.5 mA with U_e = 3.2 V

"1" U_e = 13 V up to 30.2 V
I_e = 3.7 mA up to 9.1 mA

14.1.2 PLC-Outputs of the LE

A0 up to **A7** to **X21** and **X27**
A8 up to **A30** and "control ready" to **X21**

"1" $U_{a\,min}$ = U_B - 3 V
$I_{a\,NOM}$ = 0.1 A

Connector layout, see section 4.3.3

14.1.3 PLC-inputs of the PL 300

E64 up to E126 to X4 up to X9

"0" U_e = - 20 V up to 4 V
I_e = 1.6 mA with U_e = 4 V

"1" U_e = 16.5 V up to 30 V
I_e = 6.2 mA up to 12.6 mA

14.1.4 PLC-outputs to the PL 300

A32 up to A62 and "control ready" to **X1** up to **X3**

"1" $U_{a\,min}$ = U_B - 3 V
$I_{a\,NOM}$ = 1.2 A

Connector layout, see section 4.3.4

14.2 Checking the PLC-I/O

3 test units are available for checking the PLC-inputs and outputs:

PLC TEST UNIT	**X21, X22 and X27**
KEYBOARD TEST UNIT	for **X23**
PL TEST ADAPTER	for **PL** Board

All inputs or outputs of a connector are simultaneously displayed with the PLC TEST UNIT and the KEYBOARD Unit and their voltages can be meaured. Only the inputs or outputs of one connector block of the PLC POWER I/O Board Assembly (PL 300) can be displayed at one time using the PL TEST ADAPTER. Taking measurements directly at the terminals is possible.

14.2.1 PLC-Inputs

The inputs can be controlled as follows:

- Connect TEST Unit to the **LE** or to the PLC POWER I/O Board Assembly **PL 300**.
- Select auxiliary operating mode "MOD" with the [MOD]-key and select key number with the [↑] -key.
- Input code number **951026**, input with the [ENT]-key and look at the table (at the BE) of the inputs with the [CR]-key subsequently.
  The logical states of the inputs are now displayed on the screen. The states displayed on the screen and on the test unit have to coincide. If there is a difference then measure the voltage level (as to the values, see Techn. Data) for this input at the TEST UNIT. If the input voltage is in order the respective input board is probably defective (**E0** to **E31** and **E128** to **E152 PROCESSOR** Board, **E64** to **E126** PLC POWER I/O Board Assembly **PL 300**).
- Acknowledge the auxiliary operating mode with the [DEL] and [END]-keys.

A T T E N T I O N !

When connecting/disconnecting always switch off mains switch first!

14.2.2 PLC-Outputs

The outputs can be checked as follows:

- Connnect PLC I/O TEST UNIT between the LE and the interface or the PL 300 Interface.
- Select auxiliary operating mode "MOD" with the [MOD]-key and select key number with the [↑]-key.
- Input key number "951026", enter with the [ENT]-key and call the table (at the BE) for outputs with the [RND]-key subsequently.
  The logical states for the outputs are now displayed on the screen. The states displayed on the screen and on the test unit must coincide. If there is a difference then check the connecting cable for short circuit and measure output current for this output at the interface (max. 100mA for the LE or 1.2A for the PL-outputs). If the output current is not exceeded and the connecting cable is also in order the output board is probably defective (A0 to A30 PROCESSOR Board, A32 to A62 PLC POWER I/O Board Assembly PL 300)
- Acknowledge the auxiliary operating mode with the [DEL] and the [END]-keys.

A T T E N T I O N !

When connecting/disconnecting
always switch off mains switch first!

14.2.3 Set-up for testing the PLC I/O

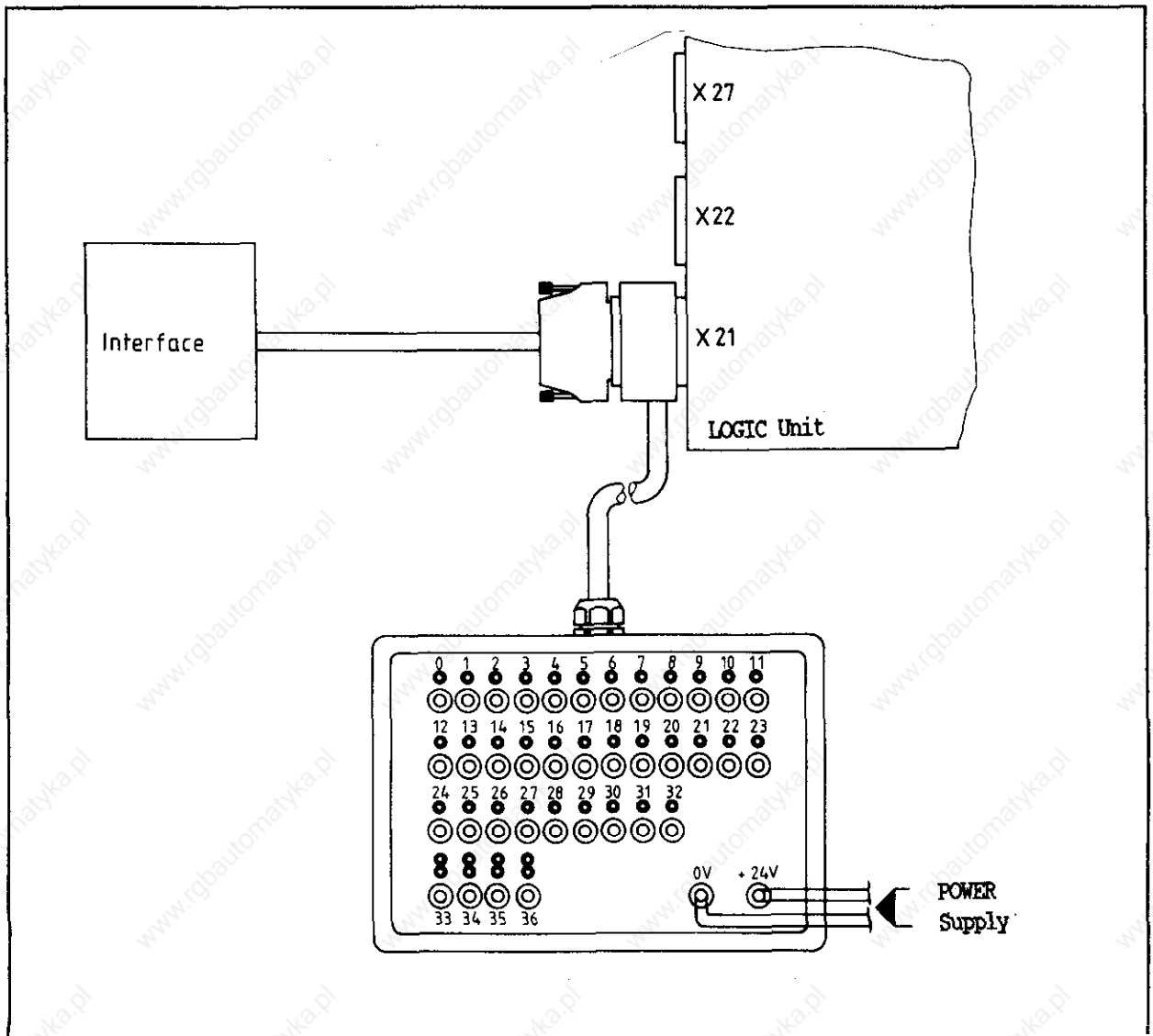

14.3 Output "Control Ready" and acknowledgement for the test "Control ready"

Important functions are supervised with self-diagnosis by the TNC 351/355 control (electronic assemblies as microprocessors, read-only memory, read-write memory, positioning systems, encoders, etc.)

If an error is determined when checking a flashing error message appears in plain dialog in the dialog display.
The output "control ready" is opened when outputting this error message. This state can be cancelled by switching the main switch off if the error cause has been eliminated before.

The output "Control ready" must switch off the 24 volt control voltage in the machine interface. Since this function is a very important safety feature the switch-off function of the output "Control Ready" is checked each time the machine is switched on via the input "Acknowledgement control ready".

The control has two supervision devices (CLP PROCESSOR Board and PROCESSOR Board). Both boards are checked one after another when switching the machine on.

If the +24V are missing at the input "Acknowledgement control Ready" during the switch-on test routine the error message "CONTROL VOLTAGE FOR RELAY MISSING" appears. If, however, the acknowledgement is switched off too late or not at all after switching the output off the **flashing** error message "EMERGENCY-STOP DEFECTIVE" appears. Also if the supply is missing for the PLC-part a **flashing** error message "EMERGENCY-STOP DEFECTIVE" appears (Supply for the PLC-Part, see section 5.4).

If an error is determined by the control during the switch-on test routine it can be determined by inserting a bridge between the output "Control ready" and the input "Acknowledgement control ready" (separate connected wires) whether the defect is due to the control or to the interface. If after inserting the bridge and correct power supply for the PLC-part the error is still present the defect is due to the LOGIC Unit. If, however, after inserting the bridge the error no longer appears the defect can be found at the interface.

A T T E N T I O N

After the check it is absolutely necessary to remove the bridge and to regenerate the operating state.

14.3.1 Switch on Test Routine Timing Diagram

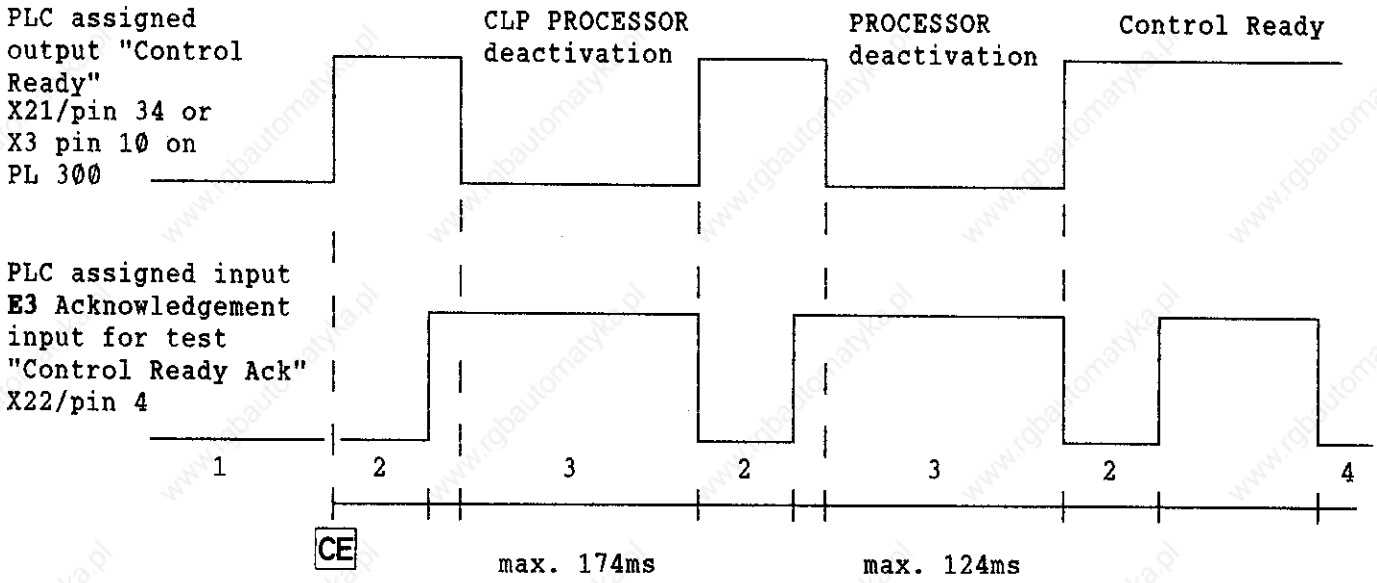

Time	Remarks	Fault message
1		CURRENT INTERRUPTION
2	Wait for control voltage	CONTROL VOLTAGE FOR RELAY IS MISSING
3	After switching the output "Control Ready" off, the acknowledgement "control ready" must be switched off within 174 ms, resp. 124 ms; if not, the flashing error message appears.	EMERGENCY-STOP DEFECTIVE
4	If during the operation the acknowledgement is switched off .... appears.	EXTERNAL EMERGENCY-STOP

15. Test Equipment

15.1 Test Unit for the POWER SUPPLY Board Assembly

PSA LOAD UNIT Id.no. 247 358 01

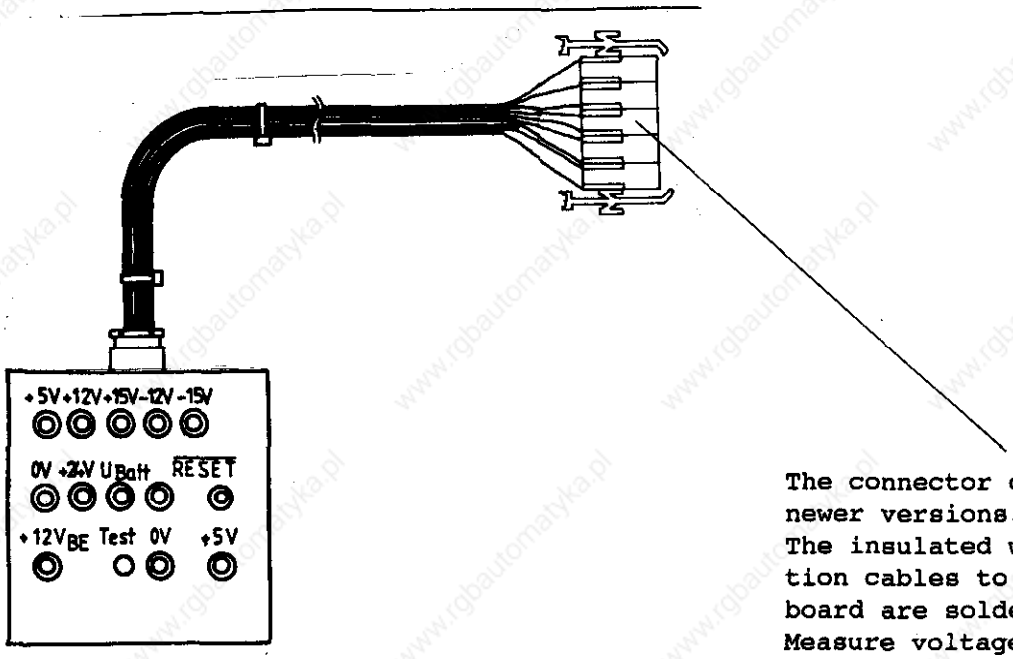

The connector doesn't exist with newer versions.
The insulated wired of the connection cables to processor and PLC board are soldered in directly.
Measure voltages according to description 5.3.2!

15.2 Test Unit for the Keyboard Unit

KEYBOARD TEST UNIT, Id.no. 247 360 01

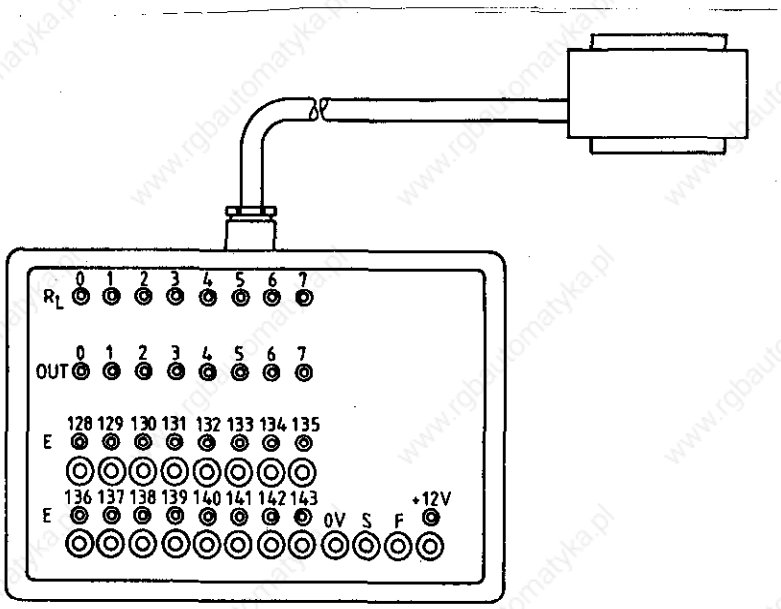

15.3 Test Aids for the PLC-I/O

PL TEST ADAPTER Id.no. 247 359 01

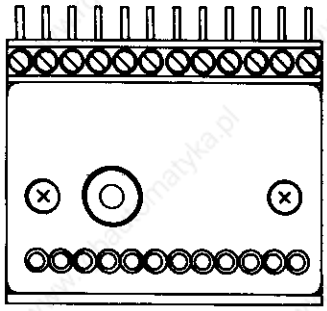

PLC TEST UNIT Id.no. 247 361 01

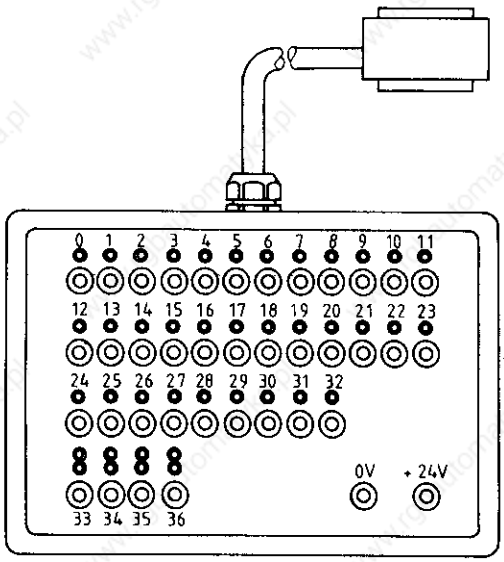

15.4 Universal Test Unit for 15-37-pin Sub-D connector

Measuring adapter, id.no. 255 480 01

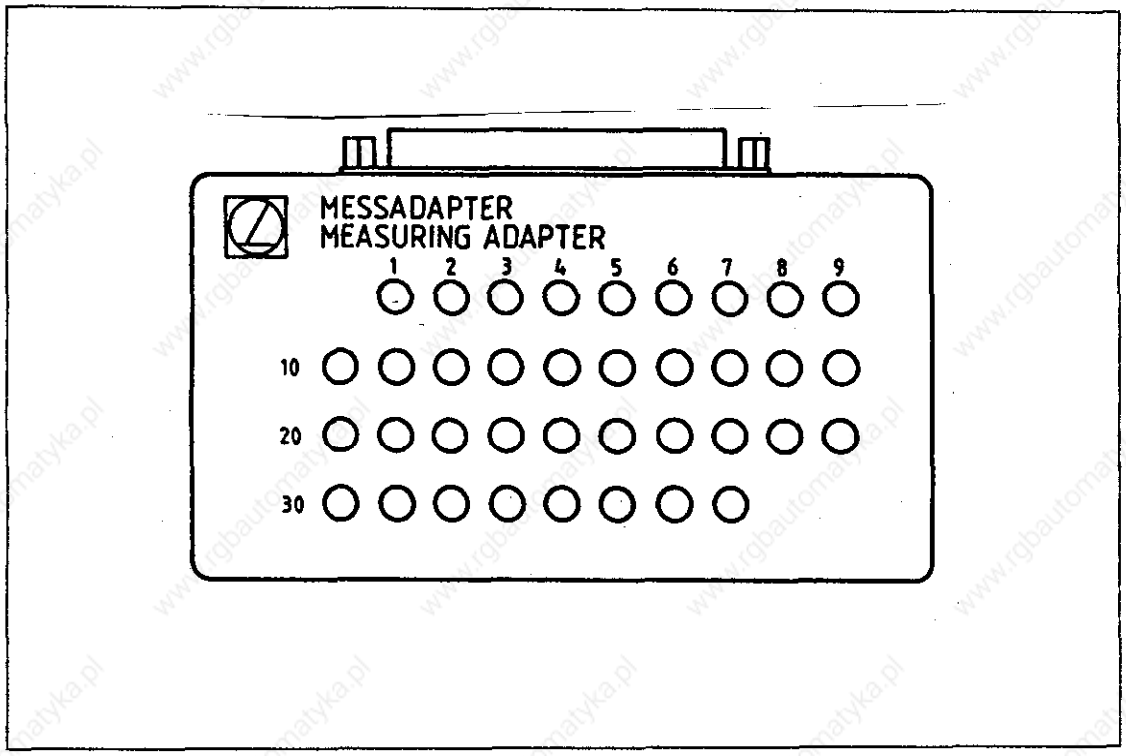

The measuring adapter is used to check the inputs and outputs of 15-37 pin Sub-D plug connections. A cable adapter described on the following page is required for each connector size.

The measuring adapter can also be inserted instead of the PLC- and the KEY-BOARD test units (without display, however) previously described.

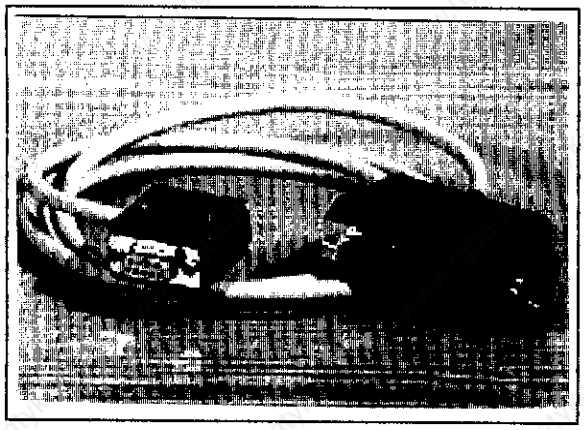

9-pin cable adapter, id.no. 255 481 01

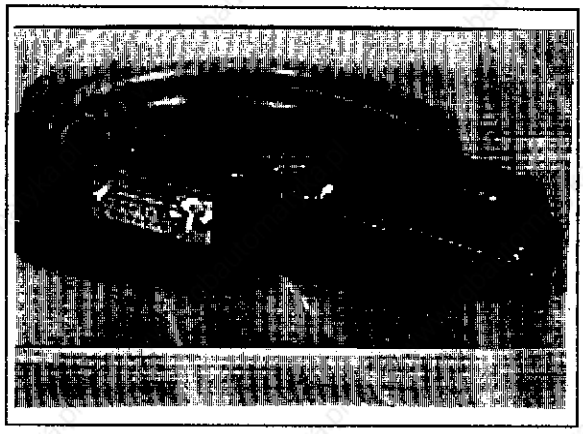

15-pin cable adapter, id.no. 255 482 01

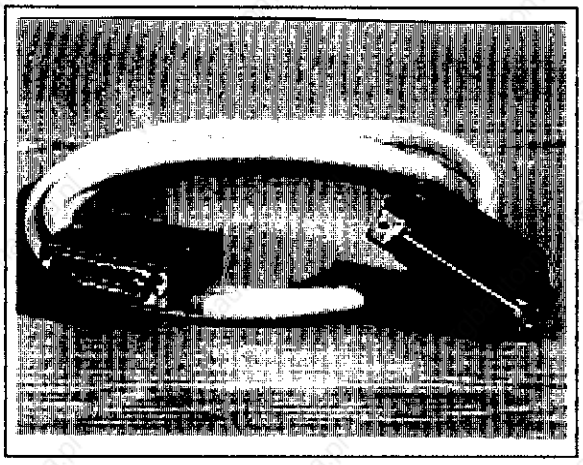

25-pin cable adapter, id.no. 255 483 01

37-pin cable adapter, id.no. 255 484 01

16. EXCHANGE INFORMATION

16.1 General

16.1.1 Auxiliaries required

1 external data storage unit, e.g. ME 101/102 or FE 401 with connecting cable

1 tool set (screwdriver, socket wrench etc.)

1 MOS-protection mat (only required when exchanging a **board** or the **EPROMS**).

16.1.2 MOS-Protection

When exchanging the **PROCESSOR** or the **CLP PROCESSOR** Boards and/or the **EPROMs** it is absolutely necessary that a MOS-protection mat is used since the **MOS-components** on the board or the **EPROMs** may be damaged by electrostatic discharge.

Attention:

Any contact with the boards or the EPROMs with an electrostatically charged object (packing, storage, place of deposit) or careless handling must be avoided.

MOS-Protection Mat:

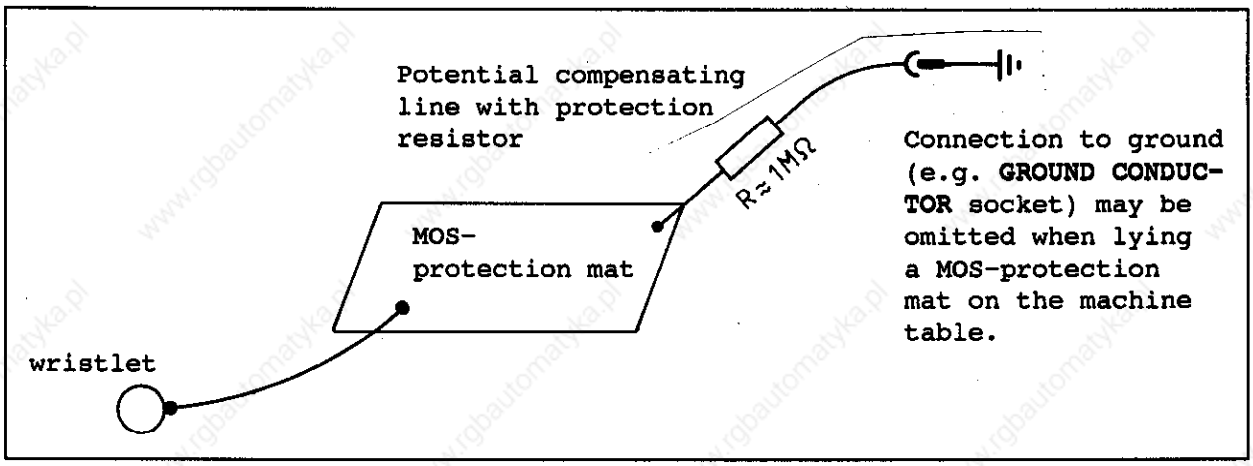

16.1.3 Compatibility of Software

Exchange units (compl. Logic Units) are equipped on principle with the latest software.
Exchange boards are delivered without software and without software release modul.
Therefore EPROMs and software release modul have to be removed from the defective board and inserted to the exchange board. (see section 16.7)
Please always send exchange boards back for repair without EPROMs and without software release modul.

When exchanging the boards it is convenient to exchange both boards (PROCESSOR and CLP PROCESSOR).
Thus an EPROM exchange is avoided and it is guaranteed that the software of your control is updated.

16.1.4 Backup of Machine Parameters and User Programs

Before exchanging the complete **LOGIC Unit** or the **PROCESSOR Board**, the **machine parameters**, the **user programs** and perhaps also the **"PLC-program"** and the **"Compensation value list"** have to be saved on an external data carrier.
If machine parameter **77** is unequal 1 PLC program parts are processed from the **RAM** and **must** be saved as well.
The following table shows which program parts are processed from **RAM** in dependence of machine parameter 77:

Machine parameter	Input value	PLC-program from **RAM**
77	0	1st and 2nd kByte
	1	- - - - - - - - - - - - -
	2	1st, 2nd and 3rd kByte
	3	3rd kByte

If the non-linear axis error compensation for one or for several axes is activated the **"compensation value list"** must also be saved.
The following table shows the activation of the non-linear axis error compensation in dependence of machine parameter 20 to 23 and 330:

Machine parameter	Input value	non-linear axis error compensation active in
20	(4 to 7) or (12 to 15)	X-axis
21	" " "	Y-axis
22	" " "	Z-axis
23	" " "	IVth-axis
330	" " "	Vth-axis

The procedure for data backup is described in section 12.1. The programs do not have to be backed up if they are already present on an external data carrier.

Note:

The machine parameters, the compensation value list (if active) and the PLC-program (**MP 77** unequal 1) should be principally backed up on an external data carrier due to reasons of safety.

16.1.5 Data determination for Supplementary Operating Modes:

If the **PROCESSOR Board** or the complete **LOGIC Unit** is to be exchanged the preset values and the input values should be determined for supplementary operating modes to bring them to the previous state after the exchange.

Switch the main switch on and off again.

Dialog display	Press keys	Remarks
MEMORY TEST	–	
POWER INTERRUPTED	CE	
RELAY EXT. DC VOLTAGE MISSING		Switch on control voltage.
MANUAL OPERATION	MOD	
PASS OVER X-REFERENCE MARK PASS OVER Y-REFERENCE MARK PASS OVER Z-REFERENCE MARK PASS OVER REFERENCE MARK AXIS 4		Do not yet approach reference marks!
VACANT BLOCKS	↓	
CHANGE MM/INCH	↓	
POSITION DATA O O O O O ACTL REF LAG NOML DIST		Note position data (⊗) adjusted and then switch over to **ACTL** with the ENT key.
VZ ACTL X		Note preset values. (Do not forget sign!)
ACTL Y		
ACTL Z		
ACTL IV.	↓	
* ACTL V.	↓	
POS.-DATA DISPLAY LARGE/SMALL	↓	
BAUD-RATE =	↓	Note baud-rate.
RS-232-C-INTERFACE = ME O FE O EXT O	↓	Note interface (⊗) adjusted and then switch over to **ME, FE** or **EXT** with the ENT key.

* only Vth-axis control.

TNC dialog display		Press key	Remarks
	VZ		
LIMIT X+ =		↓	Note limit values. (Do not forget sign!)
LIMIT X- =		↓	
LIMIT Y+ =		↓	
LIMIT Y- =		↓	
LIMIT Z+ =		↓	
LIMIT Z- =		↓	
LIMIT IV+ =		↓	
LIMIT IV- =		↓	
LIMIT V+ * =		↓	
LIMIT V- * =		↓	
NC: SOFTWARE NUMBER		↓	
PLC: SOFTWARE NUMBER		↓ DEL □	

* only with V-axes control

16.1.6 Labelling of Connection Cables:

If the connection cables are incompletely or not at all labelled, they must be labelled in order to generate the right plug connection after exchanging the LOGIC UNIT or another assembly.
Connector layout, see section 4.3

A T T E N T I O N !

Incorrect connection may cause damage to the unit.

16.2. Exchange Procedure for the LOGIC Unit

16.2.1 Backup and Cable Labelling
(see section 1.4 to 1.6)

16.2.2 Demounting the LOGIC Unit

a) Switch off mains switch.
b) Unscrew and disconnect all plug and terminal connections of the LOGIC Unit.

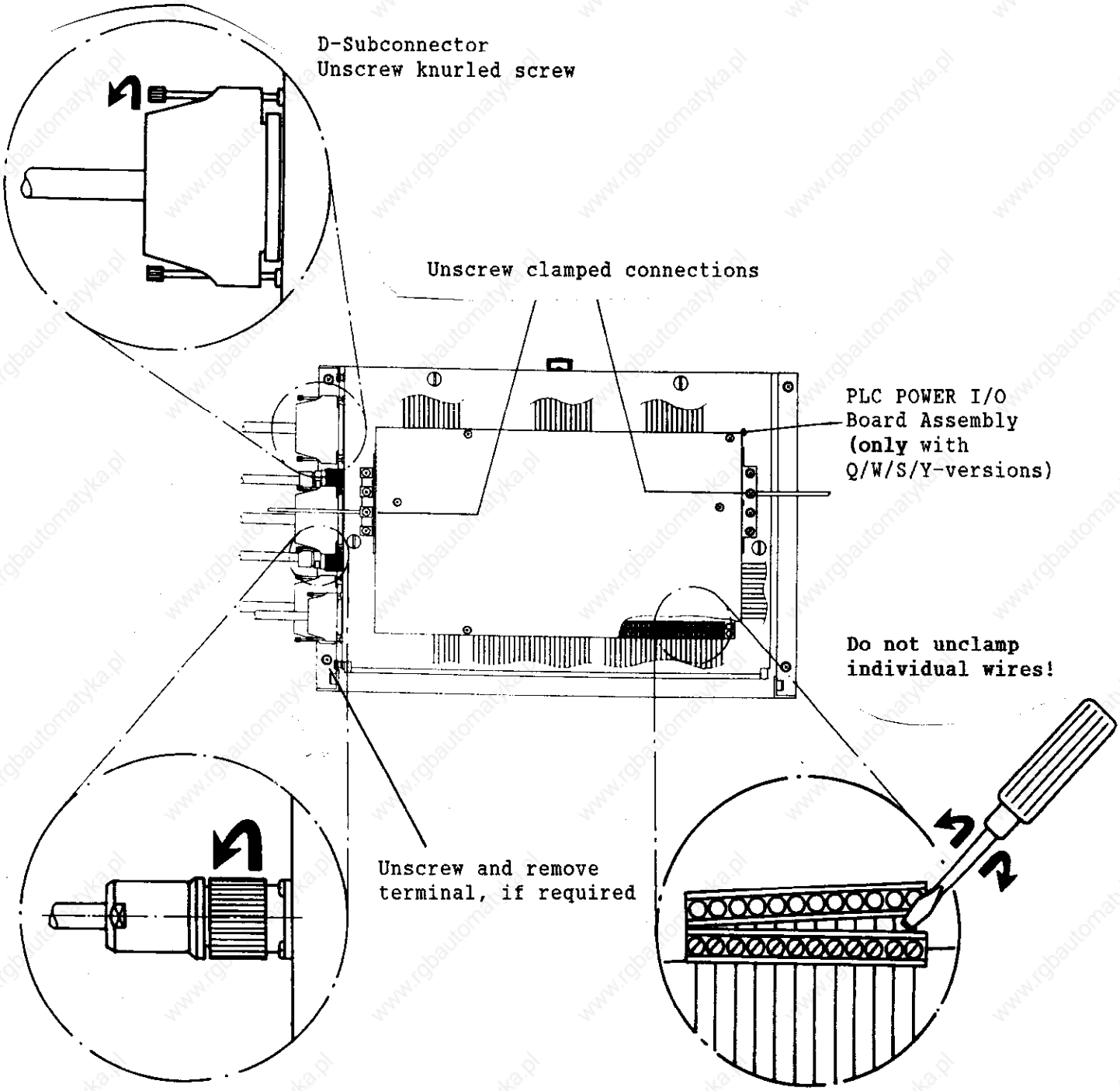

Transducer Connectors
unscrew coupling ring

Pry apart terminal connector
with screwdriver

c) Unscrew the 4 mounting screws for the LOGIC Unit.

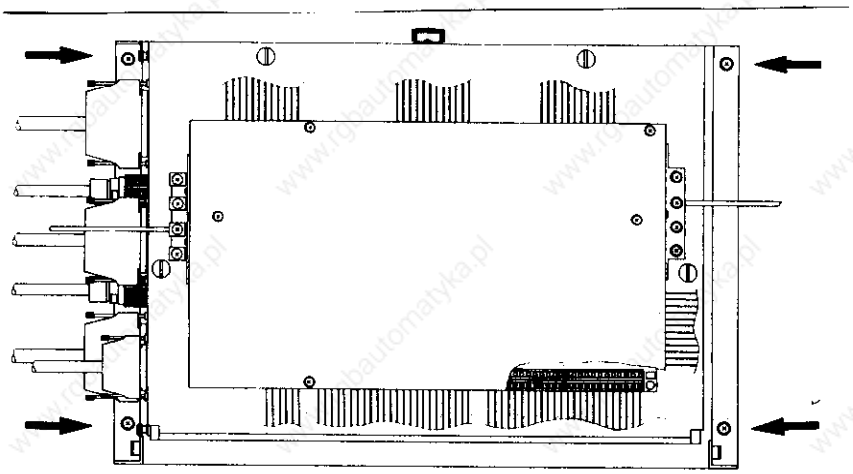

d) Take out the LOGIC Unit and replace with an exchange unit.

16.2.2 Mounting the LOGIC Unit

The procedure for mounting the replacement LOGIC Unit is opposite to that of removal.

a) Mount and secure LOGIC Unit.
b) Reconnect plug, terminal and clamp connections.

Please pay attention that no connections are interchanged!

c) Switch on mains switch.
d) Read machine parameters in again (machine parameter, PLC-program and compensation value list) which were saved before the exchange.
e) Enter preset values and supplementary operating modes from the previous table (before approaching the reference marks).
f) Read in user program.

Exchange completed.

16.3. Exchange Procedure for the PROCESSOR Board

16.3.1 MOS-Protection Mat, Software, Backup and Cable Labelling (see section 16.1.2 to 16. 1.6)

16.3.2 Removal of PROCESSOR Board

a) Switch off mains switch of the machine.
b) Unscrew and disconnect all plugged connections and the terminal connection at the PROCESSOR Board (X21, X22, X23, X24, X26 and X27). As to connector layout, see section 4.3
c) Loosen the 4 turn-lock fasteners and remove cover of LOGIC Unit.

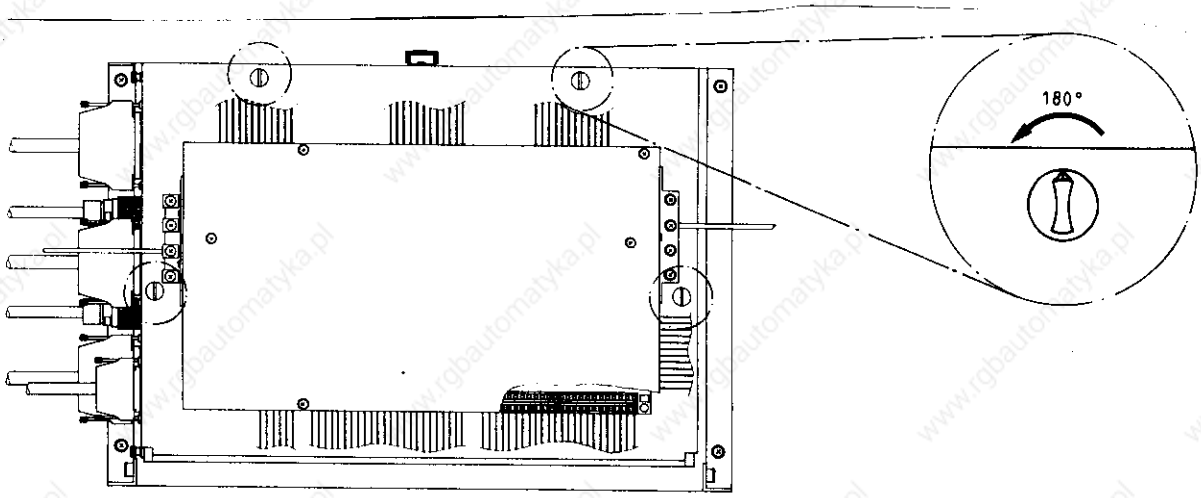

d) Disconnect internal plug connection.

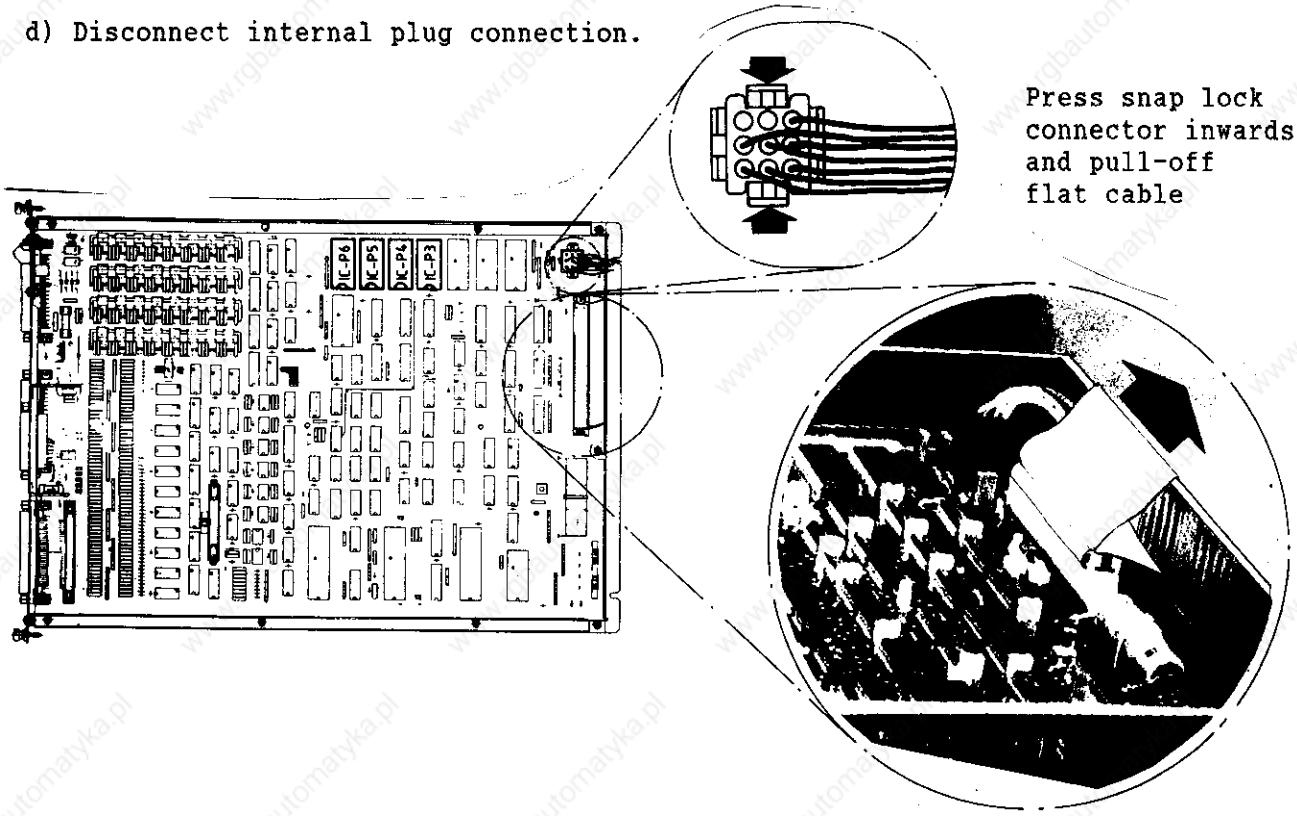

e) Unscrew fastening screws.

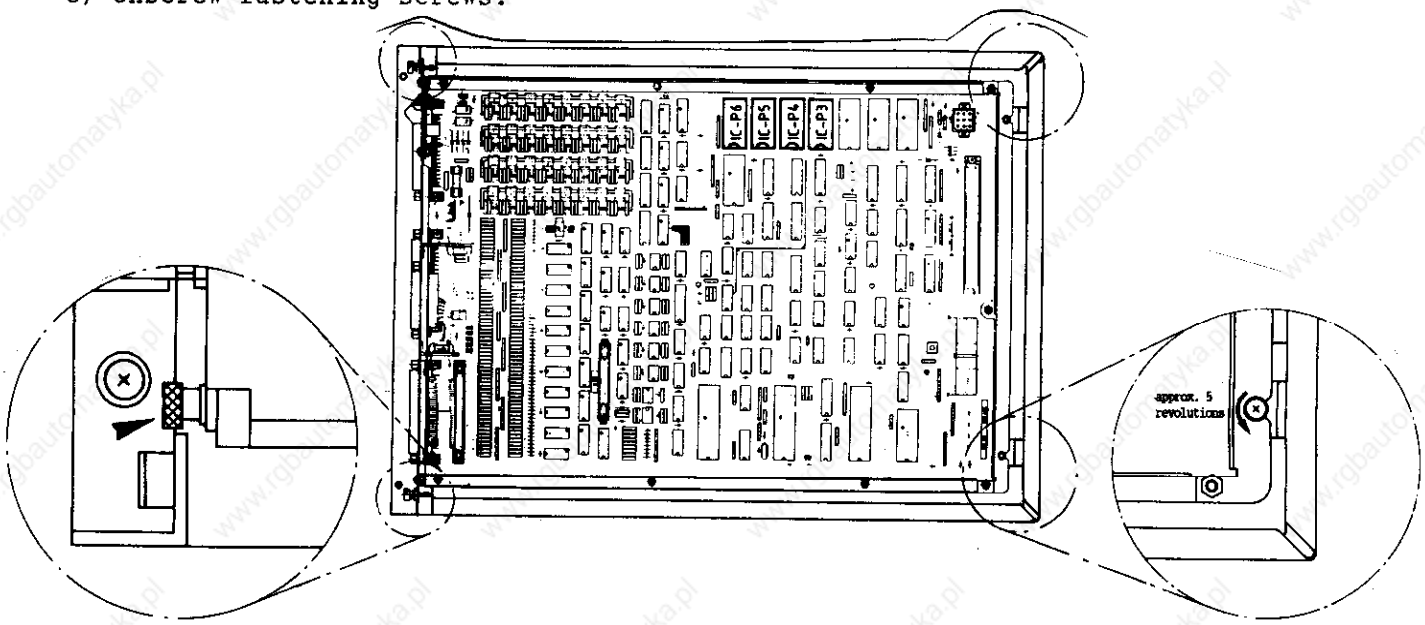

Loosen knurled screws

Loosen fastening screws

f) Take out PROCESSOR Board from the frame, exchange EPROMs, if necessary, (see section 1.3), insert new board.

16.3.3 Insertion of PROCESSOR Board

The procedure for inserting the replacement PROCESSOR Board is opposite to that of removal.

a) Push in and secure PROCESSOR Board.
b) Reconnect plug and terminal connections.

Please pay attention that no connections are interchanged!

c) Refit LOGIC Unit cover.
d) Switch on mains switch.
e) Read machine parameters in again (machine parameters, PLC-program and compensation value list) which were saved before the exchange.
f) Enter preset values and supplementary operating modes from the previous table (before approaching the reference marks).
g) Read in user program.

Exchange completed.

A T T E N T I O N

Send or store the boards **only** in the **original package** which protects the boards against electrostatic discharge!

Never use ordinary plastic bags for packaging!

16.4. Exchange Procedure for the CLP Processor Board

16.4.1 MOS-protection set, Software, Backup and Cable Labelling (see section 1.2 to 1.6)

16.4.2 Removal of CLP PROCESSOR Board

a) Switch off mains switch of the machine.
b) Unscrew and disconnect plug connections at the CLP PROCESSOR Board (X1 - X13) (connector layout, refer to section 4.3)
c) Open LOGIC Unit

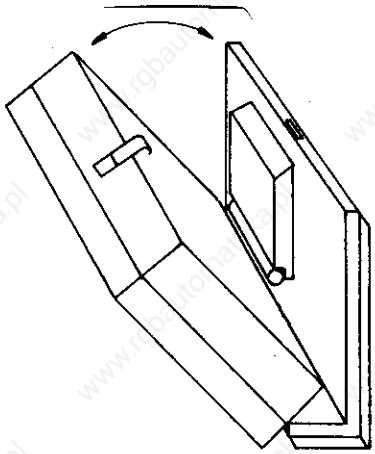

d) Disconnect internal plug connections.

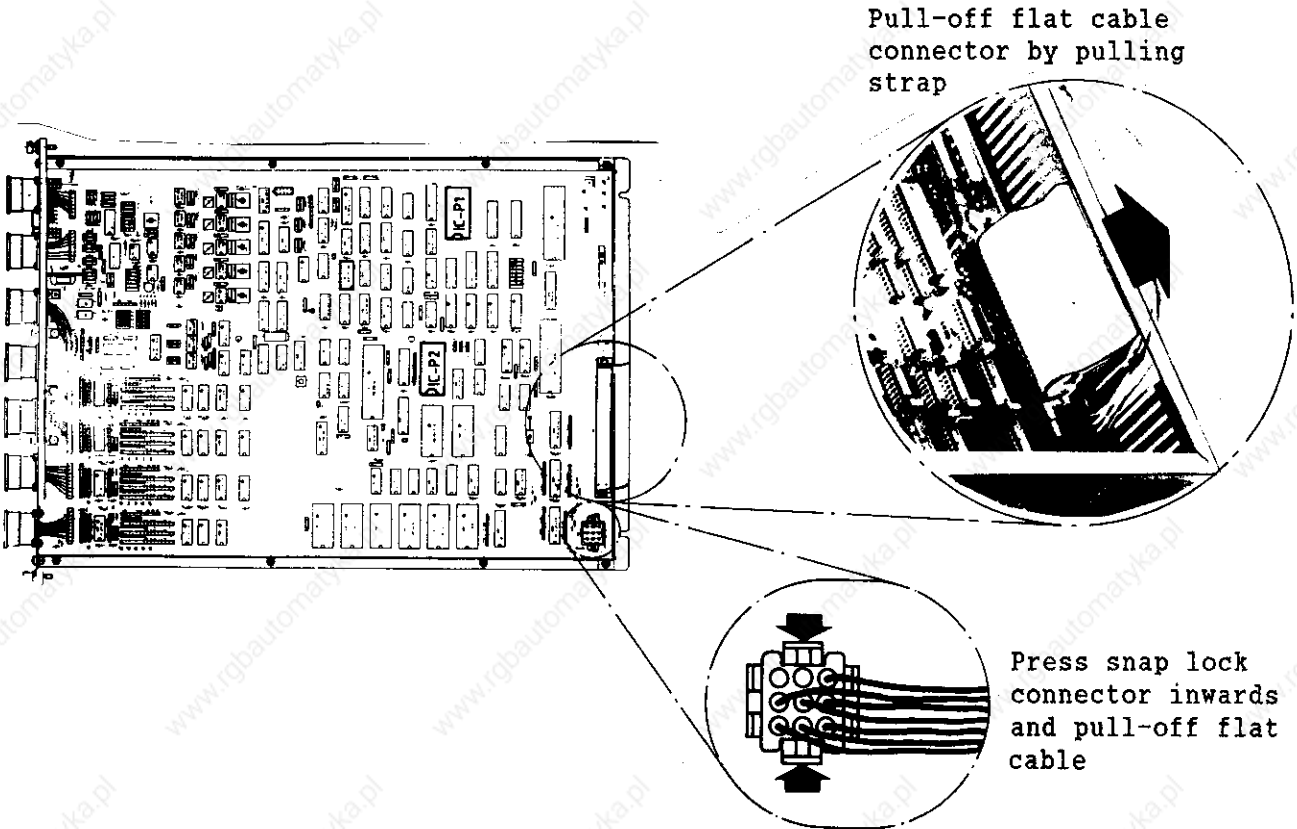

e) Unscrew mounting screws.

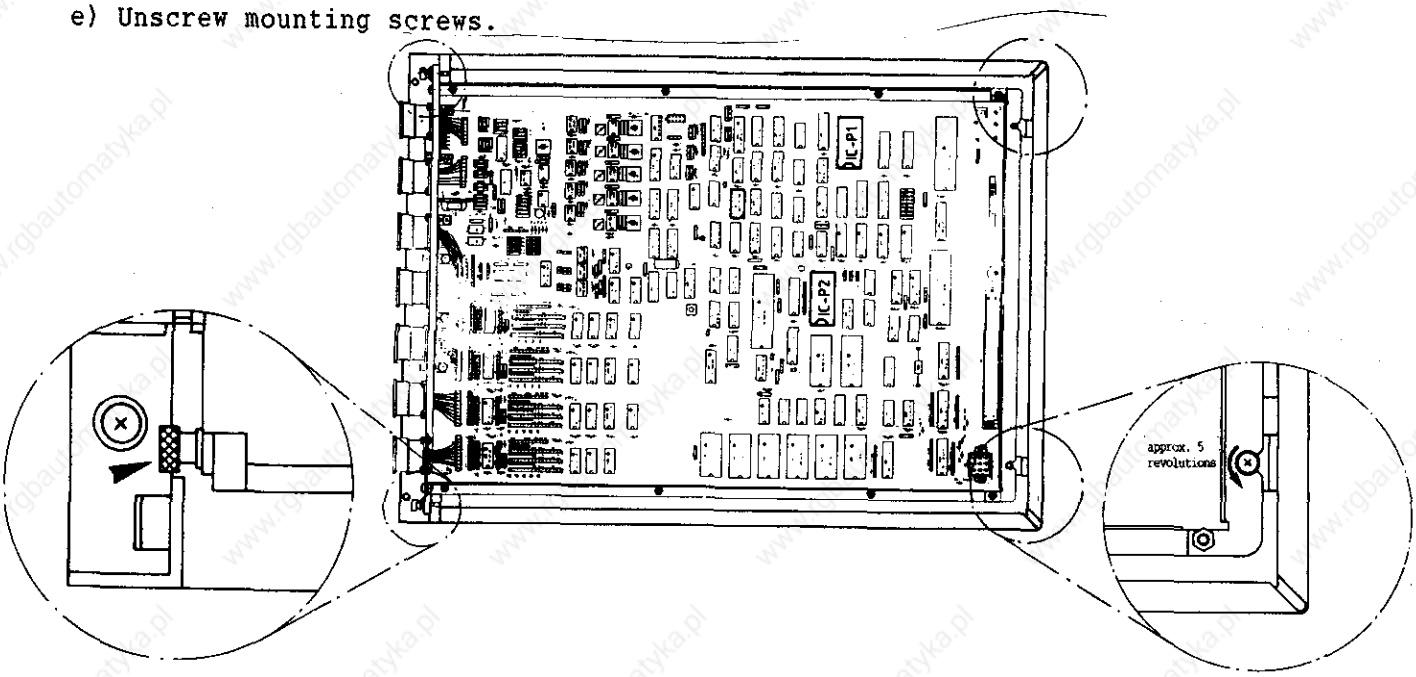

Unscrew knurled screws

Loosen fastening screws

f) Take out CLP PROCESSOR Board from the frame, exchange EPROMs, if necessary, (see section 1.3), insert new board.

16.4.3 Insertion of CLP PROCESSOR Board

The procedure for inserting the replacement CLP PROCESSOR Board is opposite to that of removal.

a) Insert and secure CLP PROCESSOR Board.
b) Reconnect plug connection.

Please pay attention that no connections are interchanged!

c) Close LOGIC Unit.
d) Switch on mains switch.

Exchange completed.

A T T E N T I O N

Send or store the boards **only** in the **original package** which protects the boards against electrostatic discharge!

Do never use ordinary plastic material for packaging!

16.5. Procedure for the POWER SUPPLY Board Assembly

a) Switch off mains switch of the machine.
b) Open LOGIC Unit

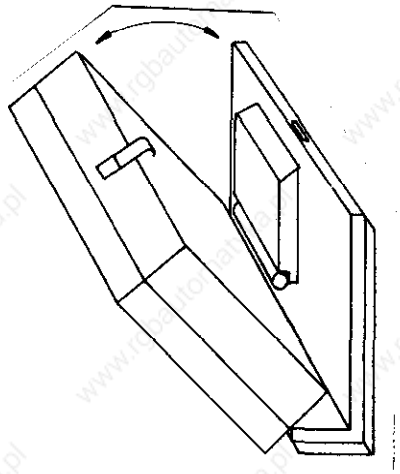

c) Disconnect terminal and multiplug connector.

Press strap lock connector inwards and pull-off plug X2.

With versions having no connector X2 the plug on the CLP processor board has to be disconnected. (see section 16.4.2)

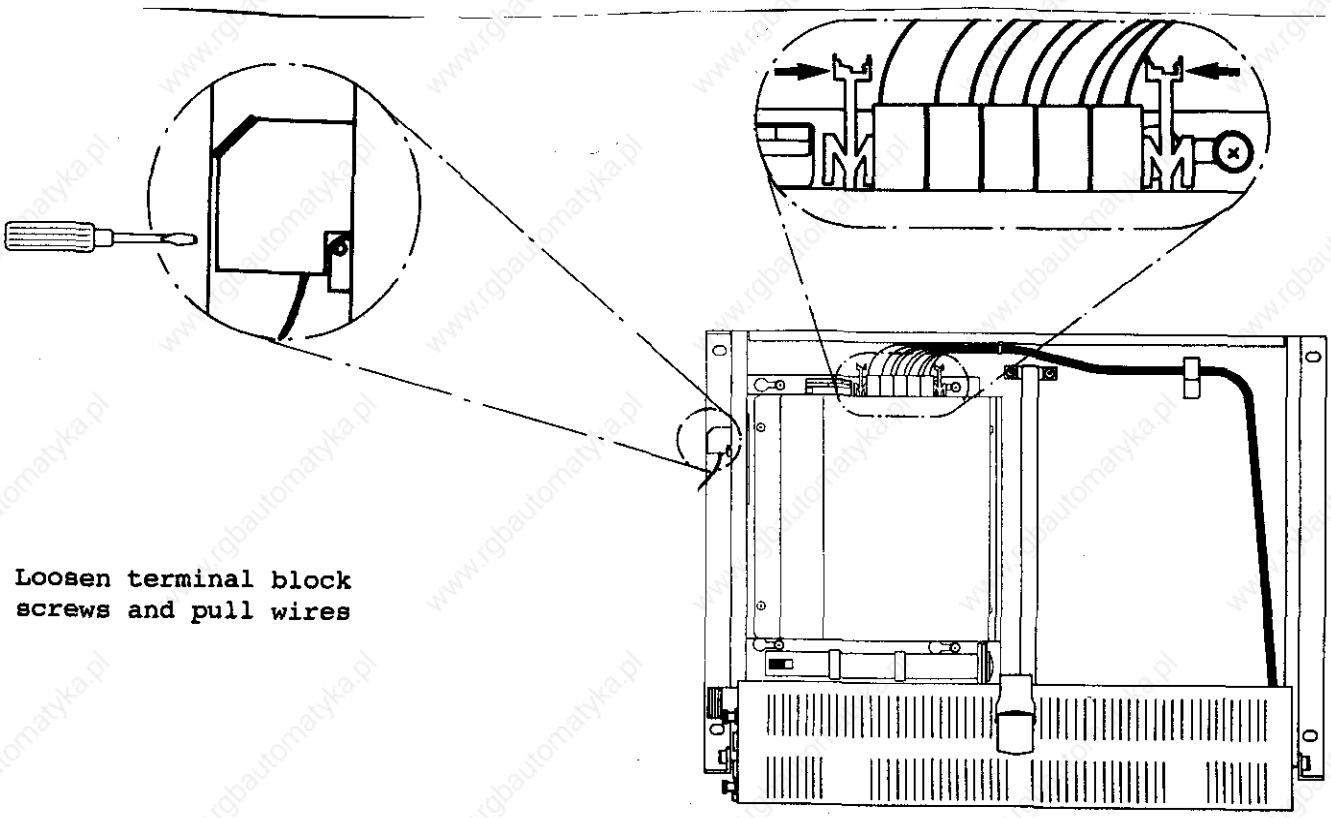

Loosen terminal block screws and pull wires

d) Loosen fastening screws.

Take out POWER SUPPLY Board Assembly and insert replacement.

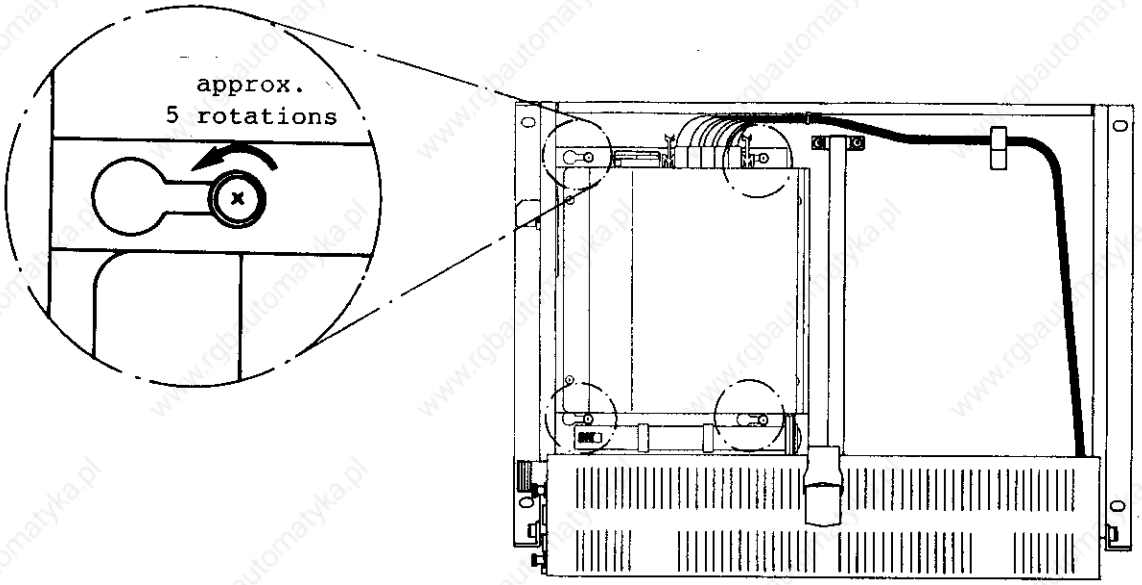

e) Tighten fastening screws, reconnect terminal and multiplug connection.

Please pay attention that no connections are interchanged!

f) Close LOGIC Unit, switch on mains switch.

Exchange completed.

A T T E N T I O N

Send or store the boards **only** in the **original package** which protects the boards against electrostatic discharge!

Never use ordinary plastic bags for packaging!

16.6. Exchange Procedure for PLC POWER I/O Board Assembly PL 300

a) Switch off mains switch.
b) Unscrew clamped and remove terminal connections at the PL 300.

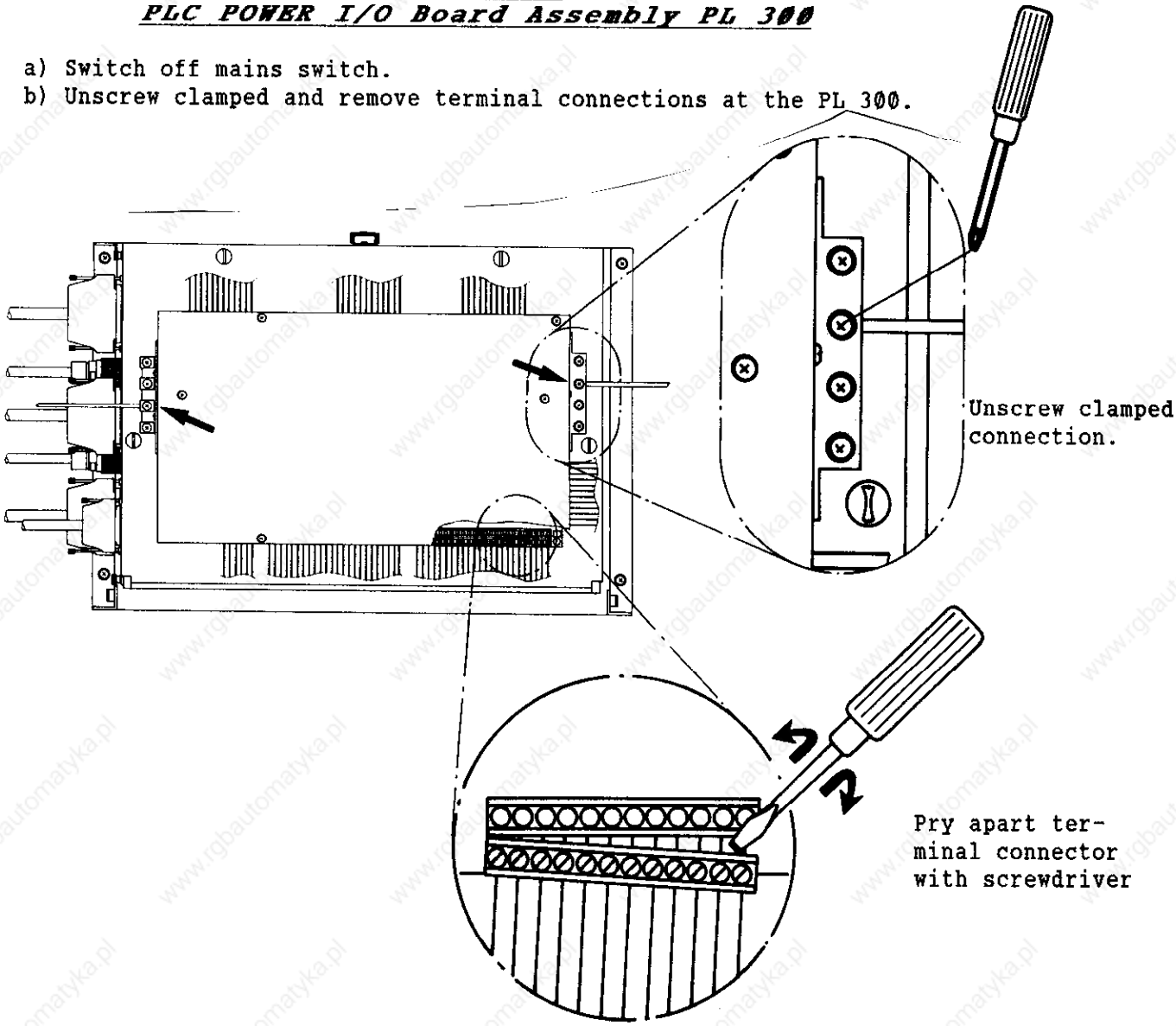

c) Loosen the 4 turn-lock fasteners and remove cover of LOGIC Unit.

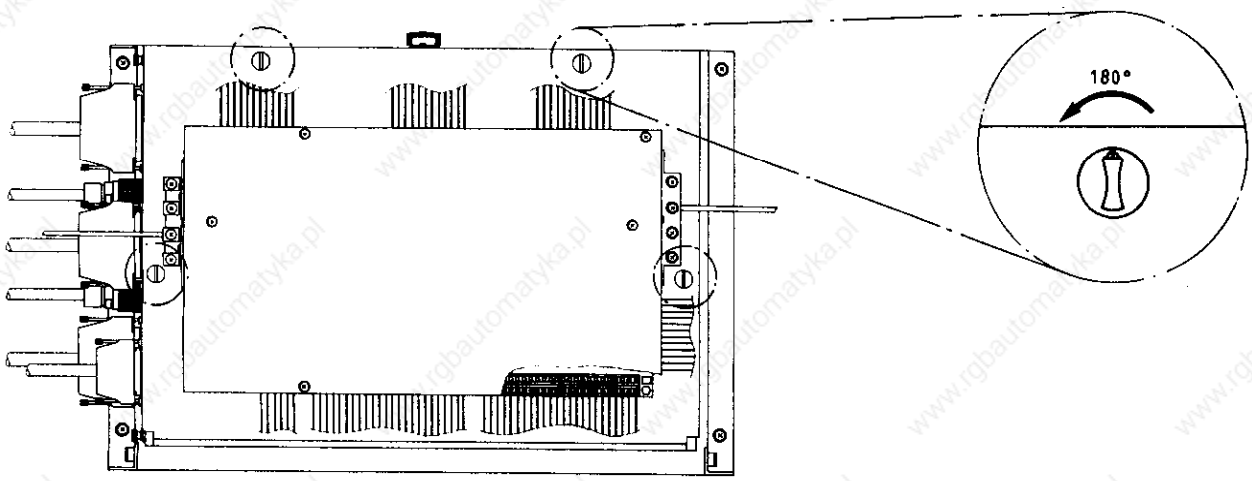

d) Disconnect flat cable connection on the PROCESSOR Board.

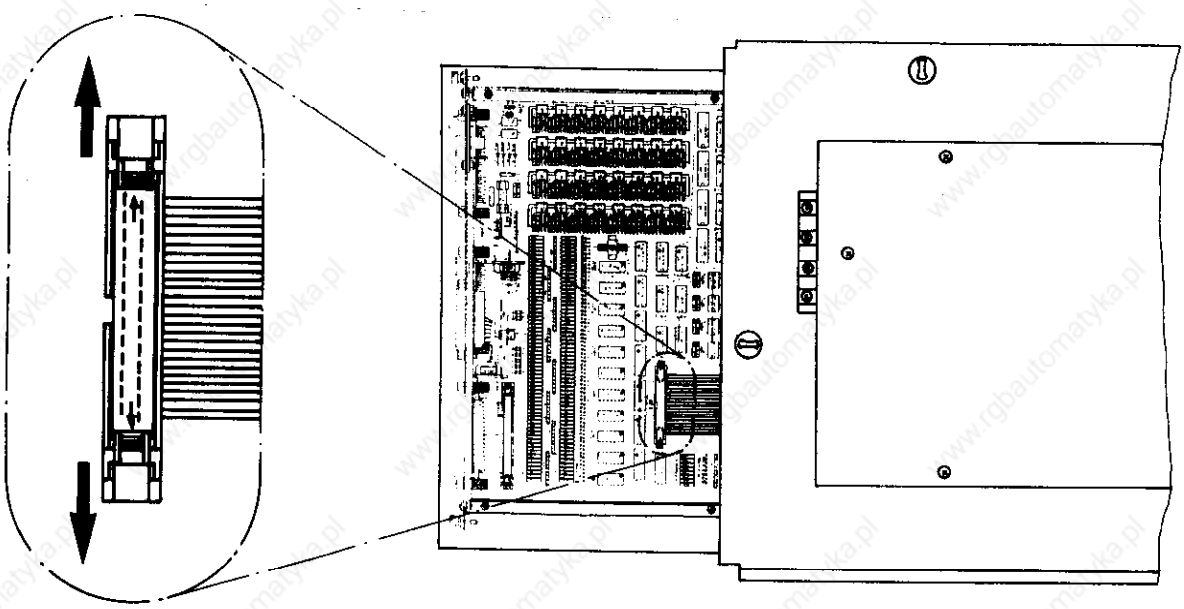

Press apart snap lock and
pull-off flat cable

e) The procedure for mounting the replacement PL 300 is opposite to that of removal.
- Reconnect PL 300 to PROCESSOR Board.
- Mount PL 300 onto the LOGIC Unit.
- Reconnect terminal and clamp connections.
- Switch on mains switch.

Exchange completed.

A T T E N T I O N

Send or store the boards **only** in the **original package** which protects the boards against electrostatic discharge!

Never use ordinary plastic bags for packaging!

16.7. Exchange Procedure for the EPROMs

16.7.1 MOS-protection

When exchanging the EPROMs it is absolutely necessary to use a MOS-protection mat. Otherwise they may be damaged by electrostatic discharge.

We recommend using an IC extraction/insertion tool to prevent damage to the board, IC socket or EPROM. Note the position no. and the package index of the EPROM for correct insertion.

e.g. IC extraction/insertion tool

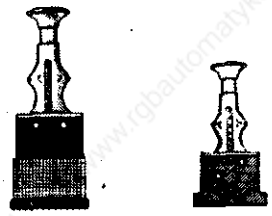

16.7.2 Labelling of EPROMs

basic software id. no.

position no. (e.g. IC-P1)

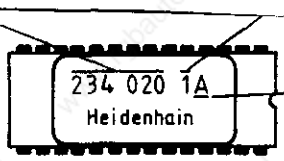

software index (software update)

package index (must point in same direction as other ICs on board)

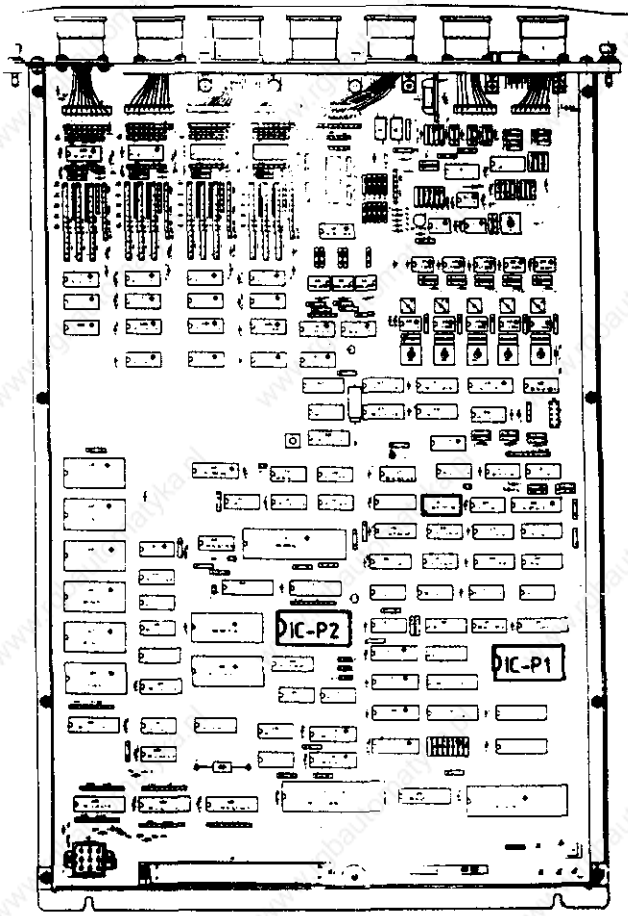

CLP PROCESSOR Board

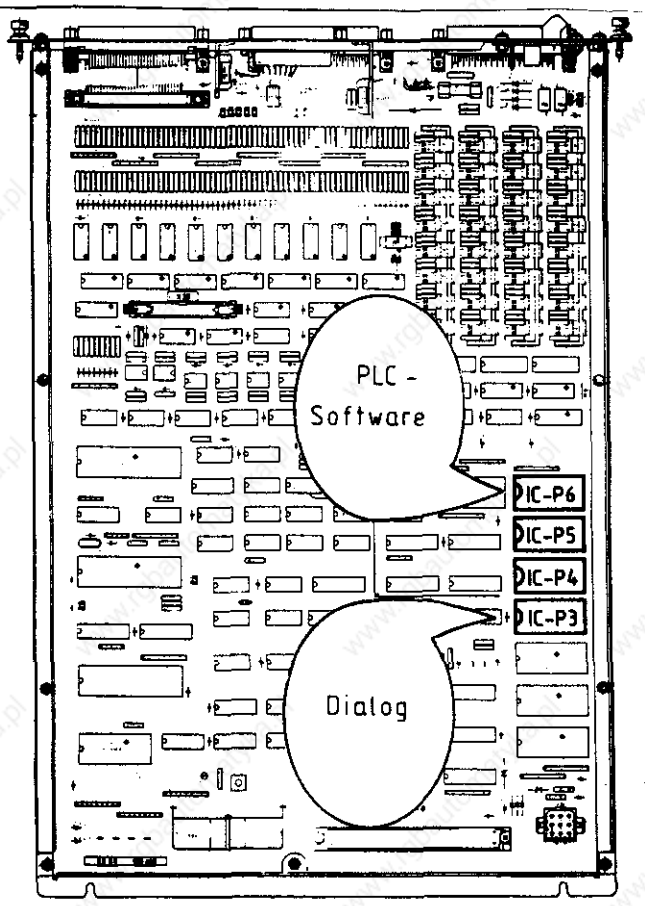

PROCESSOR Board

17. Machine parameters

The machine parameters are listed for all software versions as follows:
Since certain machine parameters are only applied for a certain software, resp. are active from a certain software version, columns with symbols after the parameter numbers are introduced for differentiation.

Meaning:

Column:
4 = standard software PGM-no. 237 300 .. to 237 339 .. for IV-axes-controls
5 = standard software PGM-no. 237 340 .. to 237 359 .. for V-axes-controls
4* = special software PGM-no. 243 100 .. to 243 139 .. for IV-axes-controls
5* = special software PGM-no. 243 140 .. to 243 159 .. for V-axes-controls

Symbols
♦ = the machine parameter is active with all software versions.
04 = the machine parameter is active **from** a certain software version (e.g. **04** means **from** software version **04**).
0 = the machine parameter of this software has no function and must be programmed with 0.
- = the machine parameter is not present in this software.

Function		Parameter no.	4	5	4*	5*	Input range
Rapid course	X	0	♦	♦	♦	♦	80...29998 [mm/min]
	Y	1	♦	♦	♦	♦	angular axis:
	Z	2	♦	♦	♦	♦	80...29998 [°/min]
	IV	3	♦	♦	♦	♦	
Manual feed	X	4	♦	♦	♦	♦	
	Y	5	♦	♦	♦	♦	
	Z	6	♦	♦	♦	♦	
	IV	7	♦	♦	♦	♦	
Speed when approaching the reference marks	X	8	♦	♦	♦	♦	
	Y	9	♦	♦	♦	♦	
	Z	10	♦	♦	♦	♦	
	IV	11	♦	♦	♦	♦	
Signal evaluation, input	X1	12	♦	♦	♦	♦	1 = 4-fold
	X2	13	♦	♦	♦	♦	(max. traverse speed 30 [m/min]
	X3	14	♦	♦	♦	♦	2 = 2-fold
	X4	15	♦	♦	♦	♦	(max. traverse speed 15 [m/min]
Traverse direction when approaching the reference marks	X	16	♦	♦	♦	♦	0 = plus direction
	Y	17	♦	♦	♦	♦	1 = minus direction
	Z	18	♦	♦	♦	♦	(if parameters no. 20 to 27 are programmed
	IV	19	♦	♦	♦	♦	correctly)

Function		Parameter no.	4	5	4*	5*	Input range
Machine parameter with multiple function	X	20					
	Y	21					
	Z	22					
	IV	23					
Counting direction		bit 0	♦	♦	♦	♦	+ 0 = positive counting direction + 1 = negative counting direction
Release for reference pulse inhibit		1	♦	♦	♦	♦	+ 0 = reference pulse inhibit inactive + 2 = reference pulse inhibit active
Release for non-linear axis error compensation		2	09	04	♦	♦	+ 0 inactive + 4 = compensation active
Output of the smallest possible voltage steps of 2.44 mV		3	09	04	♦	♦	+ 0 = 2.44 mV output if the nominal value calculated is equal/exceeds 1.22 mV. + 8 = 2.44 mV output if the nominal value calculated exceeds 0.
Polarity of the nominal value voltage	X	24	♦	♦	♦	♦	0 = positive with positive traverse direction 1 = negative with positive traverse direction
	Y	25	♦	♦	♦	♦	
	Z	26	♦	♦	♦	♦	
	IV	27	♦	♦	♦	♦	
Integral factor	X	28	♦	♦	♦	♦	0...65535
	Y	29	♦	♦	♦	♦	
	Z	30	♦	♦	♦	♦	
	IV	31	♦	♦	♦	♦	
Differential factor	X	32	♦	♦	♦	♦	0...65536
	Y	33	♦	♦	♦	♦	
	Z	34	♦	♦	♦	♦	
	IV	35	♦	♦	♦	♦	
Backlash compensation	X	36	♦	♦	♦	♦	- 1.000 ... + 1.000 [mm]
	Y	37	♦	♦	♦	♦	
	Z	38	♦	♦	♦	♦	
	IV	39	♦	♦	♦	♦	angular axis - 1.000 ... + 1.000 [°]
Compensation factor for linear compensation	X	40	♦	♦	♦	♦	- 1.000 ... + 1.000 [mm/m]
	Y	41	♦	♦	♦	♦	
	Z	42	♦	♦	♦	♦	
	IV	43	♦	♦	♦	♦	

Function		Parameter no.	4	5	4*	5*	Input range
Software limit switch ranges	X+	44	♦	♦	♦	♦	- 30000.000 ... + 30000.000 [mm]
	X-	45	♦	♦	♦	♦	
	Y+	46	♦	♦	♦	♦	
	Y-	47	♦	♦	♦	♦	
	Z+	48	♦	♦	♦	♦	
	Z-	49	♦	♦	♦	♦	
	IV+	50	♦	♦	♦	♦	angular axis:
	IV-	51	♦	♦	♦	♦	- 30000.000 ... + 30000.000 [°]
Analog voltage with rapid course, X-axis		52					
X, Y, Z, IVth-axis			♦	♦	-	-	
X-axis			06	03	♦	♦	+ 4.5 ... + 9 [V]
Approach speed		53	♦	♦	♦	♦	0.1 ... 10 [m/min]
Acceleration	X, Y, Z, IVth-axis	54	♦	-	-	-	
	X-axis		05	♦	♦	♦	0.001 ... 3.0 [m/s²]
Radial acceleration		55	♦	♦	♦	♦	0.001 ... 3.0 [m/s²]
Position supervision in operation with speed precontrol	erasable	56	♦	♦	♦	♦	0.001 ... 30 [mm]
	Emergency-stop	57	♦	♦	♦	♦	
Positioning window X, Y, Z		58	♦	♦	♦	♦	0.001 ... 2.000 [mm]
			-	-	03	03	0.001 ... 65.535 [mm]
Axis sequence when approaching the reference marks		59	♦	♦	♦	♦	0 = X Y Z IV 12 = Z X Y IV 1 = X Y IV Z 13 = Z X IV Y 2 = X Z Y IV 14 = Z Y X IV 3 = X Z IV Y 15 = Z Y IV X 4 = X IV Y Z 16 = Z IV X Y 5 = X IV Z Y 17 = Z IV Y X 6 = Y X Z IV 18 = IV X Y Z 7 = Y X IV Z 19 = IV X Z Y 8 = Y Z X IV 20 = IV Y X Z 9 = Y Z IV X 21 = IV Y Z X 10 = Y IV X Z 22 = IV Z X Y 11 = Y IV Z X 23 = IV Z Y X
Speed precontrol		60	♦	♦	♦	♦	0 = on 1 = off
Output of tool numbers or allocation numbers		61	♦	♦	♦	♦	0 = no output 1 = output of tool number only if the tool number changes. 2 = output of the tool number with each tool call. 3 = output of allocation no. (if MP 225 >= 1)
Output of spindle speed		62	♦	♦	♦	♦	0 = no output of spindle speeds

Function	Parameter no.	4	5	4*	5*	Input range
Coded output of spindle speed						1 = code output only if the speed changes. 2 = code output with each tool call.
Analog output of spindle speed	62	♦	♦	♦	♦	3 = gear switching signal only if the speed changes. 4 = gear switching signal with every tool call 5 = without gear switching signal
Rpm code limitation	63	♦	♦	♦	♦	01991 = no limitation
Transient behaviour during acceleration	64	♦	♦	♦	♦	0.01 - 0.999
Display step	65	♦	♦	♦	♦	0 = 1 µm 1 = 5 µm
without function for the time being	66	0	0	0	0	enter 0
Dwell time of rotating direction reverse Working spindle for cycle "Tapping"	67	♦	♦	♦	♦	0 ... 65.535 [s]
Memory function for directional keys	68	♦	♦	♦	♦	0 = off 1 = on
Reference mark approach	69	♦	♦	♦	♦	0 = after approaching the reference marks the axes automatically approach the software limit switches. 1 = after approaching the reference marks the axes automatically return to the reference marks. 2 = special procedure for the approach of the reference marks
Nominal value voltage for spindle drive when gear is changed	70	♦	♦	♦	♦	0 ... 9.999 [V]
Sign for end and beginning of program	71	♦	♦	♦	♦	0 ... 65535
Selection of the axes inhibited for the control	72 bit					
X-axis	0	♦	♦	♦	♦	+ 0 = not inhibited + 1 = inhibited
Y-axis	1	♦	♦	♦	♦	+ 0 = not inhibited + 2 = inhibited
Z-axis	2	♦	♦	♦	♦	+ 0 = not inhibited + 4 = inhibited
IVth-axis	3	♦	♦	♦	♦	+ 0 = not inhibited + 8 = inhibited
Vth-axis	4	–	♦	–	♦	+ 0 = not inhibited + 16 = inhibited

Function	Parameter no.	4	5	4*	5*	Input range
Parameters with multiple function	73					0 ... 65.535 [s]
MP 92 Bit 12 = 0 BCD-output of the spindle speed: Preswitch-off time of the spindle for cycle "Tapping"		♦	♦	♦	♦	
MP 92 Bit 12 = 1 Analog output of the spindle speed: spindle tracking time after reaching the drilling depth with cycle "Tapping"		–	–	02	02	
Feed and spindle override	74 bit					
Feed override, if the rapid traverse key is pressed in the auto. operating modes	0	♦	♦	♦	♦	+ 0 = override not active + 1 = override active
Continuous feed override or 2%-stages feed override	1	♦	♦	♦	♦	+ 0 = 2%-stages + 2 = continuous
Feed override, if the rapid traverse key and the external directional keys are pressed in the operating mode "Manual"	2	♦	♦	♦	♦	+ 0 = override not active + 4 = override active
Continuous spindle override or 2%-stages spindle override	3	♦	♦	♦	♦	+ 0 = 2%-stages + 8 = continuous
Reference signal evaluation for inhibited axes	75	♦	♦	♦	♦	0 = reference signal evaluation without display "Reference mark approach" 1 = reference signal evaluation with display "Reference mark approach" 2 = no reference signal evaluation
Position data and encoder supervision	76 bit					
Position data and encoder supervision for **inhibited axes**	0	♦	♦	♦	♦	+ 0 = inactive + 1 = active
The supervision of the encoder inputs for each axis can be separately switched off with bit 2 up to bit 5. This is applied for **inhibited** axes and for **non-inhibited axes**. The position data remains active if bit 0 = 1.	1	♦	♦	♦	♦	encoder input X + 0 = with supervision + 2 = no supervision
	2	♦	♦	♦	♦	encoder input Y + 0 = with supervision + 4 = no supervision
	3	♦	♦	♦	♦	encoder input Z + 0 = with supervision + 8 = no supervision

Function	Parameter no.	4	5	4*	5*	Input range
	4	◆	◆	◆	◆	encoder input IV + 0 = with supervision + 16 = no supervision
	5	◆	◆	◆	◆	encoder input V + 0 = with supervision + 32 = no supervision
	6	–	◆	–	◆	encoder input VI + 0 = with supervision + 64 = no supervision
PLC-Program from RAM or from EPROM	77 bit					
	0	◆	◆	◆	◆	+ 0 = 1st a. 2nd K-commands from RAM + 1 = 1st a. 2nd K-commands from EPROM
	1	05	◆	◆	◆	+ 0 = 3rd K-commands from EPROM + 2 = 3rd K-commands from RAM
S-analog output 0 Speed range 1 Gear stages 2 3	78 79 80 81	◆ ◆ ◆ ◆	◆ ◆ ◆ ◆	◆ ◆ ◆ ◆	◆ ◆ ◆ ◆	0 ... 99999.999 [rpm]
Speed range of gear stages 4 or 5 limit speed with 6 supervision 7	82 83 84 85	◆ ◆ ◆ ◆	◆ ◆ ◆ ◆	◆ ◆ ◆ ◆	◆ ◆ ◆ ◆	0 ... 99999.999 [rpm]
S-analog voltage with S-override to 100%	86	◆	◆	◆	◆	0 ... 9.999 [V]
S-analog voltage with S-override and max. output voltage	87	◆	◆	◆	◆	0 ... 9.999 [V]
Limitation of S-override Maximum Minimum	 88 89	 ◆ ◆	 ◆ ◆	 ◆ ◆	 ◆ ◆	0 ... 150 [%]
Axis designation for the IVth-axis	90	◆	◆	◆	◆	0 = A 3 = U 1 = B 4 = V 2 = C 5 = W
Constant contouring speed at corners	91	◆	◆	◆	◆	0 ... 179.999 [°]
Parameters with multiple function	92 bit	◆	◆	◆	◆	
Decimal characters	0	◆	◆	◆	◆	+ 0 = decimal comma + 1 = decimal point
Dialog	1	◆	◆	◆	◆	+ 0 = first dialog + 2 = second dialog (English)

Function	Parameter no.	4	5	4*	5*	Input range
Memory test during switch-on (RAM)	2	♦	♦	♦	♦	+ 0 = memory test carried out + 4 = no memory test
Checksum test during switch-on (RAM ♦ EPROM)	3	♦	♦	♦	♦	+ 0 = checksum test carried out + 8 = no checksum test
Change from program run block sequence to program run single block when processing continuous contours	4	♦	♦	♦	♦	+ 0 = the precalculated contour is finished (up to 14 blocks) + 16 = Interruption in current block
Counting mode if the IVth-axis works as a position data for an angular axis	5	♦	♦	♦	♦	+ 0 = IVth axis counts 0...29999,99 [°] + 32 = IVth-axis counts 0...359.999 [°]->0
Activation of functions for the Hirth-toothing for the IVth-axis	6	07	04	♦	♦	+ 0 = no Hirth-toothing + 64 = Hirth-toothing active
Activation of functions for the Hirth-toothing for the Vth-axis **Note:** With active Hirth-toothing MP 65 only determines the display step for the X, Y and Z-axes, MP 260 is applied for the IVth-axis and MP 342 for the Vth-axis.	7	0	04	♦	♦	+ 0 = no Hirth-toothing + 128 = Hirth-toothing active
Actual/nominal value transfer after external EMERGENCY-STOP	8	10	04	♦	♦	+ 0 = acknowledgement + 256 = no acknowledgement
Distribution of the central tool memory in tools with and without allocation numbers	9	0	0	♦	♦	+ 0 = no subdivision + 512 = subdivision (MP 209) = number of tools with allocation numbers) (MP 225) - (MP 209) = number of tools without allocation numbers)
Manual insertion of tools without allocation numbers	10	0	0	♦	♦	+ 0 = **no** tool call without allocation numbers possible (that means error message "Wrong allocation number") + 1024= tool call without allocation numbers possible (that means no error message)
Automatic acknowledgement of the error message "Current interrupted"	11	0	0	♦	♦	+ 0 = error message "Current interrupted" must be acknowledged manually + 2048= error message "Current interrupted" is automatically acknowledged after approx. 3 seconds
Ramp for the spindle speed when tapping	12	0	0	♦	♦	+ 0 = spindle ramp is determined via the tool axis + 4096= spindle ramp is determined via MP 168/MP 316, resp. MP 317/MP 318 (dependent on marker M2816)

Function	Parameter no.	4	5	4*	5*	Input range
Editing inhibit for manufacturer cycles	13	0	0	♦	♦	+ 0 = the editing of the manufacturer cycle is inhibited if the program number of the manufacturer cycle is already filed in the EPROM. + 8192= no editing inhibit, that means the program number of an existing manufacturer cycle is assigned to a new program.
"GOTO-function" with blockwise transfer and simultaneous processing	14	0	0	02	02	+ 0 = GOTO-function not possible + 16384 = GOTO-function possible
Actual/nominal value display with/ without tool length correction when setting datums in the tool axis	15	0	0	03	03	+ 0 = display without tool length correction + 32768 = display with tool length correction
Overlapping factor with pocket milling	93	♦	♦	♦	♦	0.1 ... 1.414
PLC: counter preset value for counters 0 - 15	94	♦	♦	♦	♦	0 ... 65535
	95	♦	♦	♦	♦	
	96	♦	♦	♦	♦	
	97	♦	♦	♦	♦	
	98	♦	♦	♦	♦	
	99	♦	♦	♦	♦	
	100	♦	♦	♦	♦	
	101	♦	♦	♦	♦	
	102	♦	♦	♦	♦	
	103	♦	♦	♦	♦	
	104	♦	♦	♦	♦	
	105	♦	♦	♦	♦	
	106	♦	♦	♦	♦	
	107	♦	♦	♦	♦	
	108	♦	♦	♦	♦	
	109	♦	♦	♦	♦	
PLC: time of timer for timers 0 - 15	110	♦	♦	♦	♦	0 ... 65535 (in units of 20 ms)
	111	♦	♦	♦	♦	
	112	♦	♦	♦	♦	
	113	♦	♦	♦	♦	
	114	♦	♦	♦	♦	
	115	♦	♦	♦	♦	
	116	♦	♦	♦	♦	
	117	♦	♦	♦	♦	
	118	♦	♦	♦	♦	
	119	♦	♦	♦	♦	
	120	♦	♦	♦	♦	
	121	♦	♦	♦	♦	
	122	♦	♦	♦	♦	
	123	♦	♦	♦	♦	
	124	♦	♦	♦	♦	
	125	♦	♦	♦	♦	

Function	Parameter no.	4	5	4*	5*	Input range
PLC: 31 positioning values for PLC-Positioning	126	♦	♦	♦	♦	- 30000.000 ... + 30000.000 [mm]
	127	♦	♦	♦	♦	
	128	♦	♦	♦	♦	
	129	♦	♦	♦	♦	
	130	♦	♦	♦	♦	
	131	♦	♦	♦	♦	
	132	♦	♦	♦	♦	
	133	♦	♦	♦	♦	
	134	♦	♦	♦	♦	
	135	♦	♦	♦	♦	
	136	♦	♦	♦	♦	
	137	♦	♦	♦	♦	
	138	♦	♦	♦	♦	
	139	♦	♦	♦	♦	
	140	♦	♦	♦	♦	
	141	♦	♦	♦	♦	
	142	♦	♦	♦	♦	
	143	♦	♦	♦	♦	
	144	♦	♦	♦	♦	
	145	♦	♦	♦	♦	
	146	♦	♦	♦	♦	
	147	♦	♦	♦	♦	
	148	♦	♦	♦	♦	
	149	♦	♦	♦	♦	
	150	♦	♦	♦	♦	
	151	♦	♦	♦	♦	
	152	♦	♦	♦	♦	
	153	♦	♦	♦	♦	
	154	♦	♦	♦	♦	
	155	♦	♦	♦	♦	
	156	♦	♦	♦	♦	
Activation of the next tool number, programmable with TOOL CALL ../.. or with the following allocation number, programmable with TOOL DEF	157	♦	♦	♦	♦	0 = no output of next tool number 1 = output of next tool number only if tool number is changed (TOOL CALL ../..) 2 = output of next tool number with each tool call (TOOL CALL ../..) 3 = output of next tool allocation number, programmable with TOOL DEF (if MP 225 >= 1)
Setting of a binary number with 16 markers (marker 2192 to 2207)	158	♦	♦	♦	♦	0 ... 65535
Automatic lubrification after X	159	♦	♦	♦	♦	0 ... 65535 (in units of 65536 µm)
programmed traverse path Y	160	♦	♦	♦	♦	
in Z	161	♦	♦	♦	♦	
IV	162	♦	♦	♦	♦	

Function	Parameter no.	4	5	4*	5*	Input range
Feed speed X for parameter no. 126 Y to no. 156 Z IV	163 164 165 166	♦ ♦ ♦ ♦	♦ ♦ ♦ ♦	♦ ♦ ♦ ♦	♦ ♦ ♦ ♦	80 ... 29998 [mm/min]
Actual feed display before the start in the **manual operating modes** (same feed in all axes, that means smallest programmable feed, that means from parameters 4 to 7 and 322)	167	♦	♦	♦	♦	0 = no display 1 = display
Ramp gradient foe S-analog voltage	168	♦	♦	♦	♦	0 ... 1.999 [V/ms]
Standstill supervision	169	♦	♦	♦	♦	0.001 ... 30 [mm]
Programming station	170	♦ -	♦ -	♦ ♦	♦ ♦	0 = control 1 = programming station: PLC active 2 = programming station: PLC inactive 3 = analog outputs for plotter operation
Selection of the Handwheel and the probe system	171 bit 0	0	0	♦		+ 0 HR 150/250 + 1 HR 130/330
	1	♦	♦	♦	♦	+ 0 = TS 511 + 2 = TS 111/120
Polarity of S-analog voltage	172	♦	♦	♦	♦	0 = M03: positive voltage M04: negative voltage 1 = M03: negative voltage M04: positive voltage 2 = M03 and M04: positive voltage 3 = M03 and M04: negative voltage
Status display erasure and Q-parameters with M02, M30 and program end	173	♦	♦	♦	♦	0 = status display is not erased 1 = status display is erased
Position supervision in trailing distance operation Emergency-Stop Erasable	 174 175	 ♦ ♦	 ♦ ♦	 ♦ ♦	 ♦ ♦	0 ... 100 [mm]
Multiplication factor for the Kv-factor	176	♦	♦	♦	♦	0.001 ... 1.000
Kv-factor for the trailing operation X Y Z IV	177 178 179 180	♦ ♦ ♦ ♦	♦ ♦ ♦ ♦	♦ ♦ ♦ ♦	♦ ♦ ♦ ♦	0.100 ... 10.000
Characteristic kink	181	♦	♦	♦	♦	0 ... 100.000 [%]
Minimum for feed override when tapping Maximum for feed override when tapping	182 183	♦ ♦	♦ ♦	♦ ♦	♦ ♦	0 ... 150 [%] 0 ... 150 [%]

Function	Parameter no.	4	5	4*	5*	Input range
Minimum voltage for S-analog output	184	♦	♦	♦	♦	0 ... 9.999 [V]
Waiting time to switch-off the residual nominal value voltage when the error message "Positioning error" appears	185	♦	♦	♦	♦	0 ... 65.535 [s]
Datums for positioning blocks with M92: X	186	♦	♦	♦	♦	- 30000.000 ... + 30000.000 [mm]
Y	187	♦	♦	♦	♦	resp.
Z	188	♦	♦	♦	♦	- 30000.000 ... + 30000.000 [°]
IV	189	♦	♦	♦	♦	
Programming of speed S=0 permitted (voltage value of MP 184 can be very low)	190	♦	♦	♦	♦	0 = S=0 permitted 1 = S=0 not permitted
Display of current spindle speed before the spindle start	191	♦	♦	♦	♦	0 = off 1 = on
Positioning window for the IVth-axis	192	♦	♦	♦	♦	0.001 ... 2.000 [mm or °]
		-	-	03	03	0.001 ... 65.535 [mm or °]
PLC: time of timers for timer 16-31	193	♦	♦	♦	♦	0 ... 65535 (in units of 20 ms)
	194	♦	♦	♦	♦	
	195	♦	♦	♦	♦	
	196	♦	♦	♦	♦	
	197	♦	♦	♦	♦	
	198	♦	♦	♦	♦	
	199	♦	♦	♦	♦	
	200	♦	♦	♦	♦	
	201	♦	♦	♦	♦	
	202	♦	♦	♦	♦	
	203	♦	♦	♦	♦	
	204	♦	♦	♦	♦	
	205	♦	♦	♦	♦	
	206	♦	♦	♦	♦	
	207	♦	♦	♦	♦	
	208	♦	♦	♦	♦	
Function dependent on M92, bit 9	209					
MP92 bit 9 = 0: activation of PLC macro commands		♦	♦	♦	♦	
M92 Bit 9 = 1: number of tools with allocation number		-	-	♦	♦	0 ... 99 tools
Activation of PLC-macro commands (Setting of markers 3200 ... 3263)	210	♦	♦	♦	♦	0 ... 9999
	211	♦	♦	♦	♦	
	212	♦	♦	♦	♦	
Cycle "Scaling" is active on 2 axes or on 3 axes	213	♦	♦	♦	♦	0 = 3 axes (spacial) 1 = 2 axes (operating plane)

Function	Parameter no.	4	5	4*	5*	Input range
Output of M- and S-function	214 bit					
Programmed stop with M06	0	♦	♦	♦	♦	+ 0 = programmed stop with M06 + 1 = no progrmmed stop with M06
Output of M89	1	♦	♦	♦	♦	+ 0 = normal output at beginning of block + 2 = modal cycle call at end of block
Axis standstill if only one new spindle speed is output with a TOOL CALL	2	♦	♦	♦	♦	+ 0 = axis standstill + 4 = no axis standstill
Axis stands still when M-function is output **Ecceptions:** axis stands still with M-functions which result in a programmed stop (as M00, M02 ...) or if a STOP or a CYCL-CALL block occurs	3	♦	♦	♦	♦	+ 0 = axis standstill + 8 = no axis standstill
Reserved	4	0	0	0	0	+ 0
Axis stands still if a tool numnber, a tool axis or a spindle speed was programmed with a TOOL CALL	5	0	0	♦	♦	+ 0 = axis standstill + 32 = no axis standstill
Nominal/actual value acknowledgement during M/S/T-strobe if marker 2552 ff was set	6	0	0	♦	♦	+ 0 = during M/S/T-strobe the actual value is acknowledged as nominal value + 64 = during M/S/T-strobe the actual value is not acknowledged as nominal value
Probe system: feed for probing	215	♦	♦	♦	♦	80 ... 3000 [mm/min]
Probe system: measuring path	216	♦	♦	♦	♦	0 ... 19999.999 [mm]
Switch-over from HEIDENHAIN dialog programming to DIN/ISO-programming	217	♦	♦	♦	♦	0 = HEIDENHAIN-dialog 1 = DIN/ISO
"Blockwise transfer" ASCII-character for data input	218	♦	♦	♦	♦	0 ... 65535
"Blockwise transfer" ASCII-character for data output	219	♦	♦	♦	♦	0 ... 65535
"Blockwise transfer" ASCII-character for the beginning the end of the command block	220	♦	♦	♦	♦	0 ... 12079
"Blockwise transfer" ASCII-character for pos. acknowledgement, resp. negative acknowledgement	221	♦	♦	♦	♦	0 ... 12079

Function	Parameter no.	4	5	4*	5*	Input range
Data format and transmission stop for V.24-data interface	222 bit					
7 or 8 data bit	0	♦	♦	♦	♦	+ 0 = 7 data bit (ASCII-code with 8th bit = parity) + 1 = 8 data bit (ASCII-code with 8th bit 0, 9th bit = parity)
Block-check character	1	♦	♦	♦	♦	+ 0 = any BCC-character (also control sign) + 2 = BCC-character, no control sign
Transmission stop by RTS	2	♦	♦	♦	♦	+ 0 = inactive + 4 = active
Transmission stop by DC3	3	♦	♦	♦	♦	+ 0 = inactive + 8 = active
Even or odd character parity	4	♦	♦	♦	♦	+ 0 = even + 16 = odd
Requested character parity	5	♦	♦	♦	♦	+ 0 = not required + 32 = required
Number of stop bits	6/7	♦	♦	♦	♦	7 | 6 0 | 0 1½ stop bits 0 | 1 2 stop bits 1 | 0 1 stop bit 1 | 1 1 stop bit Setting bit 6: + 64 Setting bit 7: + 128
Operating mode V.24-data interface	223	♦	♦	♦	♦	0 = "standard data interface" 1 = "blockwise transfer"
"Blockwise transfer" ASCII-character for end of data transmission	224	♦	♦	♦	♦	0 ... 12079
Central tool memory	225	♦	♦	♦	♦	0 = no central tool memory 1 ... 99 = central tool memory input value = number of tool stations
Graphic printout Number of control characters to set the printer interface + 1 control character	226	♦	♦	♦	♦	0 ... 65535
Graphic printout 2 control characters to set the printer interface	227 228 229	♦ ♦ ♦	♦ ♦ ♦	♦ ♦ ♦	♦ ♦ ♦	0 ... 65535

Function	Parameter no.	4	5	4*	5*	Input range
Graphic printout Number of control characters before each printer line + 1 control character	230	♦	♦	♦	♦	0 ... 65535
Graphic printout 2 control charcaters before each printer line	231 232 ♦	♦ ♦ ♦	♦ ♦ ♦	♦ ♦ ♦	♦ ♦	0 ... 65535
Movement supervision	234	♦	♦	♦	♦	0.03 ... 10 [V]
Touch probe system: safety distance via measuring point for autom. measurement	235	♦	♦	♦	♦	0 ... 19999.999 [mm]
Graphics	236 bit					
Switch-over to "View in three planes"	0	♦	♦	♦	♦	+ 0 = German standard + 1 = American standard
Turning the coordinate system by 90° in the working plane	1	♦	♦	♦	♦	+ 0 = no rotation + 2 = coordinate system turned
Activation of the S-axis for spindle orientation	237	♦	♦	♦	♦	0 = axis inactive 1 = axis is used to orientate the main spindle, without position data 2 = as input value 1, with position data, however (displayed instead of the IVth-, resp. the Vth-axis)
Kv-factor for S-axis (spindle)	238	♦	♦	♦	♦	0.100 ... 10.0000
Counting direction and handwheel input inhibit for axis of spindle orientation	239 bit					
Counting direction	0	♦	♦	♦	♦	+ 0 = positive counting direction + 1 = negative counting direction
Not assigned	1	–	–	0	0	
Not assigned	2	–	–	0	0	
Not assigned	3	–	–	0	0	
Encoder input X5 as Handwheel input for the X-axis	4	–	–	♦	♦	+ 0 = encoder input X5 corresponds to the standard input + 16 = encoder input X5 corrresponds to the Handwheel input for the X-axis
Positioning value to the reference value for the S-axis (spindle)	240	♦	♦	♦	♦	0 ... 360.000

Function	Parameter no.	4	5	4*	5*	Input range
Cycles to mill pockets of any contour	241 bit					
Cycle "Reaming": milling direction to premill contour	0	♦	♦	♦	♦	+ 0 = counterclockwise premilling of the contour with pockets, clockwise premilling with islands + 1 = clockwise premilling of the contour with pockets, counterclockwise premilling with islands
Cycle "Reaming": sequence for reaming and premilling	1	♦	♦	♦	♦	+ 0 = mill a channel round the contour first, ream the pocket subsequently + 2 = ream the pocket first, mill a channel round the contour subsequently
Combining corrected or uncorrected contours	2	♦	♦	♦	♦	+ 0 = combining corrected contours + 4 = combining uncorrected contours
Reference mark distance for distance-coded encoders X	242	♦	♦	♦	♦	0 ... 65535 0 = no distance-coded reference marks 1000 = linear encoder with 20 µm grating pitch or angular encoder with 36 reference marks and 18000 lines
Y	243	♦	♦	♦	♦	
Z	244	♦	♦	♦	♦	
IV	245	♦	♦	♦	♦	
Positioning window for S-axis (spindle)	246	♦	♦	♦	♦	1 ... 65535 (incrementals)
Hysteresis for Electronical Handwheel	247	♦	♦	♦	♦	0 ... 65535 (incrementals)
Spindle speed for spindle orientation	248	♦	♦	♦	♦	0 ... 99999.999 (rpm)
Setting a binary number with 16 markers (marker 2208 to 2223)	249	♦	♦	♦	♦	0 ... 65535
Setting a binary number with 16 markers (marker 2224 to 2239)	250	♦	♦	♦	♦	0 ... 65535
Touch probe: rapid traverse for probing	251	♦	♦	♦	♦	80 ... 29998 (mm/min)
Automatic, cyclic offset adjustment	252	♦	♦	♦	♦	1 ... 65535 (in unist of 20 ms) 0 = no automatic adjustment
Allocation of the axes to the encoder inputs X	253	♦	♦	♦	♦	0 = standard allocation 1 = encoder input X1 2 = encoder input X2 3 = encoder input X3 4 = encoder input X4 5 = encoder input X5 6 = encoder input X6
Y	254	♦	♦	♦	♦	
Z	255	♦	♦	♦	♦	
IV	256	♦	♦	♦	♦	
V	257	0	♦	0	♦	
Analog output of the speed for the spindle if marker 2501 is set	258	♦	♦	♦	♦	0 ... 99999.999 (rpm) the rotating dircetion is always positive

Function	Parameter no.	4	5	4*	5*	Input range
Change-over dialogs for manufacturer cycles: difference between dialog numbers of the second (English) and the first dialog	259	♦	♦	♦	♦	0 ... 50
Prescribed step for the IVth-axis if the Hirth-toothing is activated via MP 92	260	08	04	♦	♦	0 ... 9.999 [°] Input value 0 is treated as 0.001.
Displacement for the IVth-axis if the Hirth-toothing is activated via MP 92	261	08	04	♦	♦	- 30000.000 ... + 30000.000 [°]
Number of global Q-parameters which are transferred from a manufacturer cycle to the calling program	262	05	♦	♦	♦	0 ... 50 When entering 40 the Q-parameters Q60 ... Q99 are global
Difference between Q-parameter numbers for "DLG-DEF"-block and "DLG-CALL"-block in the user cycle	263	♦	♦	♦	♦	0 ... 50 0 if "DLG-CALL"-blocks only
PLC: time of timers for timers 32 - 47	264	05	♦	♦	♦	0 ... 65535 (in units of 20 ms)
	265	05	♦	♦	♦	
	266	05	♦	♦	♦	
	267	05	♦	♦	♦	
	268	05	♦	♦	♦	
	269	05	♦	♦	♦	
	270	05	♦	♦	♦	
	271	05	♦	♦	♦	
	272	05	♦	♦	♦	
	273	05	♦	♦	♦	
	274	05	♦	♦	♦	
	275	05	♦	♦	♦	
	276	05	♦	♦	♦	
	277	05	♦	♦	♦	
	278	05	♦	♦	♦	
	279	05	♦	♦	♦	
PLC: counter preset value for counters 16 - 31	280	05	♦	♦	♦	0 ... 65535
	281	05	♦	♦	♦	
	282	05	♦	♦	♦	
	283	05	♦	♦	♦	
	284	05	♦	♦	♦	
	285	05	♦	♦	♦	
	286	05	♦	♦	♦	
	287	05	♦	♦	♦	
	288	05	♦	♦	♦	
	289	05	♦	♦	♦	
	290	05	♦	♦	♦	
	291	05	♦	♦	♦	
	292	05	♦	♦	♦	
	293	05	♦	♦	♦	
	294	05	♦	♦	♦	
	295	05	♦	♦	♦	

Function		Parameter no.	4	5	4*	5*	Input range
Limitation of the feed override in % if marker 2509 is set		296	05	♦	♦	♦	0 ... 150 [%]
Acceleration	Y	297	05	♦	♦	♦	0.001 ... 3.0 [m/s²]
	Z	298	05	♦	♦	♦	
	IV	299	05	♦	♦	♦	
The acceleration for the X-axis is determined by MP 54.							
Analog voltage with rapid traverse	Y	300	08	03	♦	♦	+ 4.5 ... + 9 [V]
	Z	301	08	03	♦	♦	
	IV	302	08	03	♦	♦	
The analog voltage for the X-axis is determined by MP 52.							
Input values for the datum shift, activated via markers 2816, 2817, 2819							
1. datm shift	X	303	08	04	♦	♦	- 30000.000 ... + 30000.000 [mm]
2. datum shift	X	304	08	04	♦	♦	
3. datum shift	X	305	08	04	♦	♦	
1. datum shift	Y	306	08	04	♦	♦	- 30000.000 ... + 30000.000 [mm]
2. datum shift	Y	307	08	04	♦	♦	
3. datum shift	Y	308	08	04	♦	♦	
1. datm shift	Z	309	08	04	♦	♦	- 30000.000 ... + 30000.000 [mm]
2. datm shift	Z	310	08	04	♦	♦	
3. datum shift	Z	311	08	04	♦	♦	
1. datum shift	IV	312	08	04	♦	♦	- 30000.000 ... + 30000.000 [mm]
2. datum shift	IV	313	08	04	♦	♦	resp.
3. datum shift	IV	314	08	04	♦	♦	- 30000.000 ... 30000.000 [°]
%-factor for tha analog spindle voltage if marker 2822 is set		315	08	04	♦	♦	0 ... 150 [%]
Ramp gradient - S-analog voltage to stop the spindle		316	09	04	♦	♦	0 ... 1.999 [V/ms] 0 = acceleration and braking from MP 168
Ramp gradient for the S-analog voltage if M 2816 is set							
Acceleration		317	09	04	♦	♦	0 ... 1.999 [V/ms]
Braking		318	09	04	♦	♦	0 ... 1.999 [V/ms]
M 90 modal		319	0	0	♦	♦	0 = M 90 not modal 1 ... 89 (except for 2, 3, 4, 5, 6, 8, 9, 13, 14, 30)= M-function which is active as M 90, but not modal

Function	Parameter no.	4	5	4*	5*	Input range
Axis designation for the Vth-axis	320	–	♦	0	♦	0 = A 3 = U 1 = B 4 = V 2 = C 5 = W
Rapid traverse for the Vth-axis	321	–	♦	0	♦	80 ... 29998 [mm/min] angular axis: 80 ... 29998 [°/min]
Manual feed for the Vth-axis	322	–	♦	0	♦	80 ... 29998 [mm/min] angular axis: 80 ... 29998 [°/min]
Speed when approaching the reference marks	323	–	♦	0	♦	
Feed for PLC-positioning of Vth-axis	324	–	♦	0	♦	
Software limit switch ranges V +	325	–	♦	0	♦	- 30000.000 ... + 30000.000 [mm] angular axis: - 30000.000 ... + 30000.000 [°]
V -	326	–	♦	0	♦	
Signal evaluation, input X5	327	–	♦	0	♦	1 = 4-fold 2 = 2-fold (max. traverse speed limited by the EXE-input frequency)
Reference mark distance for distance-coded encoders Axis V	328	–	♦	0	♦	0 ... 65535 0 = no distance-coded reference marks 1000 = linear encoders with 20µm grating pitch or angular encoder with 36 reference marks and 18000 lines
Traverse direction when approaching the referenec marks	329	–	♦	0	♦	0 = plus direction 1 = minus direction (if machine parameters 330 and 331 are correctly programmed)
Machine parameters with multiple function	330 bit					
Counting direction for the Vth-axis	0	–	♦	0	♦	+ 0 = positive counting direction + 1 = negative counting direction
Reference pulse inhibit for the Vth-axis	1	–	♦	0	♦	+ 0 = inactive + 2 = active
Release for non-linear axis error compensation for the Vth-axis	2	–	04	0	♦	+ 0 = inactive + 4 = compensation active
Output of the smallest possible voltage step of 2.44 mV for the Vth-axis	3	–	04	0	♦	+ 0 = 2.44 mV output if the nominal value calculated is equal or exceeds 1.22 mV. + 8 = 2.44 mV output if the nominal value calculated exceeds 0.

Function	Parameter no.	4	5	4*	5*	Input range
Polarity of the nominal value voltage	331	–	◆	0	◆	0 = positive with positive traverse direction 1 = negative with positive traverse direction
Differential factor for the speed precontrol	332	–	◆	0	◆	0 ... 65.535
Kv-factor for the trailing operation V	333	–	◆	0	◆	0.100 ... 10.000
Datum setting via axis key V	334	–	◆	0	◆	0 = inactive, datum is acknowledged from MP 337 1 = active
Acceleration for the Vth-axis	335	–	◆	0	◆	0.001 ... 3.0 [m/s²]
Positioning window for the Vth-axis	336	– -	◆ -	0 -	◆ 03	0.001 ... 2.000 [mm or °] 0.001 ... 65.535 [mm or °]
Datum for the Vth-axis	337	–	◆	0	◆	- 30000.000 ... + 30000.000 [mm]
Analog voltage with rapid traverse, axis V	338	–	03	0	◆	+ 4.5 ... + 9 [V]
Input values for the datum shift of the Vth-axis, activated via marker 2816, 2817, 2819 1. datum shift V 2. datum shift V 3. datum shift V	 339 340 341	 – – –	 04 04 04	 0 0 0	 ◆ ◆ ◆	- 30000.000 ... + 30000.000 [mm] resp. - 30000.000 ... + 30000.000 [°]
Prescribed step for the Vth-axis if the Hirth-toothing ia activated via MP 92	342	–	04	0	◆	0 ... 9.999 [°] input value 0 is treated as 0.001
Displacement for the Vth-axis if the Hirth-toothing is activated via MP 92	343	–	04	0	◆	- 30000.000 ... + 30000.000 [°]
Compensation factor for linear compensation of the Vth-axis	344	–	04	0	◆	- 1.000 ... + 1.000 [mm/m]

Function	Parameter no.	4	5	4*	5*	Input range
2nd group: software limit switch ranges for the 5th-axis; selectable via markers M2816/M2817 5+	345	–	–	0	♦	linear axis: - 30000.000 ... + 30000.000 mm rotational axis: - 30000.000 ... + 30000.000°
5-	346	–	–	0	♦	
3rd group: software limit switch ranges for the 5th-axis, selectable via marker M2816/M2817 5+	347	–	–	0	♦	linear axis: - 30000.000 ... + 30000.000 mm rotational axis: - 30000.000 ... + 30000.000°
5-	348	–	–	0	♦	
Datum for positioning blocks with M 92 axis 5	349	–	–	0	02	- 30000.000 ... + 30000.000 [mm] resp. - 30000.000 ... + 30000.000 [°]
Reserved	350	–	–	0	0	
	351	–	–	0	0	
	352	–	–	0	0	
	353	–	–	0	0	
	354	–	–	0	0	
	355	–	–	0	0	
	356	–	–	0	0	
	357	–	–	0	0	
	358	–	–	0	0	
	359	–	–	0	0	
Minimum spindle speed	360	–	–	♦	♦	0 ... 99999.999 rpm
Spindle speed, %-deviation of nominal value output	361	–	–	♦	♦	0 ... 99 %
2nd spindle speed for spindle orientation; active if the MP317/MP318 ramps were selected via marker 2823	362	–	–	♦	♦	0 ... 99999.999 rpm
2nd group: software limit switch ranges; selectable via markers M2816/M2817 X+	363	–	–	♦	♦	linear axis: - 30000.000 ... + 30000.000 mm rotational axis: - 30000.000 ... 30000.000°
X-	364	–	–	♦	♦	
Y+	365	–	–	♦	♦	
Y-	366	–	–	♦	♦	
Z+	367	–	–	♦	♦	
Z-	368	–	–	♦	♦	
IV+	369	–	–	♦	♦	
IV-	370	–	–	♦	♦	

Function		Parameter no.	4	5	4*	5*	Input range:
3rd group: software limit switch ranges; selectable via M2816/M2817 markers	X+	371	–	–	♦	♦	linear axis:
	X-	372	–	–	♦	♦	- 30000.000 ... + 30000.000 mm
	Y+	373	–	–	♦	♦	rotational axis:
	Y-	374	–	–	♦	♦	- 30000.000 ... + 30000.000°
	Z+	375	–	–	♦	♦	375
	Z-	376	–	–	♦	♦	
	IV+	377	–	–	♦	♦	377
	IV-	378	–	–	♦	♦	
Non-volatile storage of Q-parameters (8 parameters)		379	–	–	♦	♦	0 = no non-volatile storage of Q-parameters 1 ... 92 = number of the first Q-parameter out of eight (non-volatile storage)
Multiple definition of tools in the centrol tool memory		380	–	–	♦	♦	0 = no multiple definition per tools 1 = 2 various definitions per tool 2 = 3 various definitions per tool 3 = 4 various definitions per tool 4 = 5 various definitions per tool 5 = 6 various definitions per tool
Size of NC-buffer memroy with "Blockwise transfer" with simultaneous processing		381	–	–	02	02	0 = reload continuous blocks 1 ... 3000 = minimum number of NC-blocks in the block memory. After remaining below this limit data are reloaded via the interface.
Overlap voltage for positive analog voltage of the spindle (only active if analog voltage > 0)		382	–	–	02	02	- 9.999 ... + 9.999 [V]
Overlap voltage for negative analog voltage for the spindle (only active if analog voltage < 0)		383	–	–	02	02	- 9.999 ... + 9.999 [V]