XS130BLPAL2

Dimensions

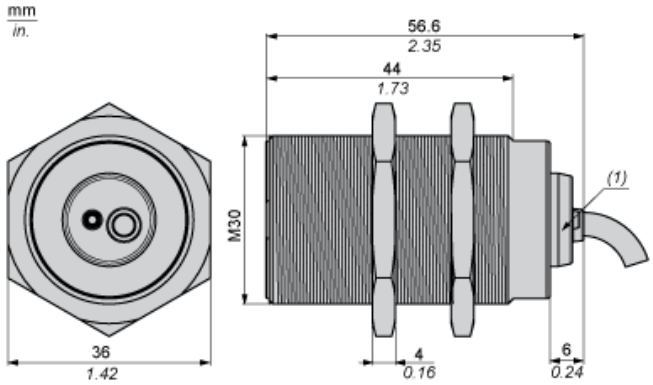

(1) LED

XS130BLPAL2

Minimum Mounting Distances

Side by side

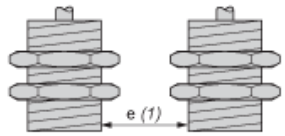

e (1) ≥ 20 mm/0.79 in

Face to face

e (2) ≥ 120 mm/4.72 in

Facing a metal object

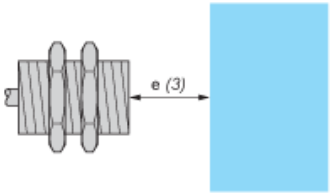

e (3) ≥ 30 mm/1.18 in.