Ref: ATO-XXX-B225-D16

I_{PN} = 60, 63, 75, 100, 125 A

ATO series is a split core current transformer for the electronic measurement of AC waveform current with galvanic separation between the primary circuit (power) and the secondary circuit (measurement).

ATO series is an ideal current transformer for new Smart-Grid applications, in which ratio error and phase displacement are fully tested with IEC 61869 standards accordance.

Accuracy Class 1

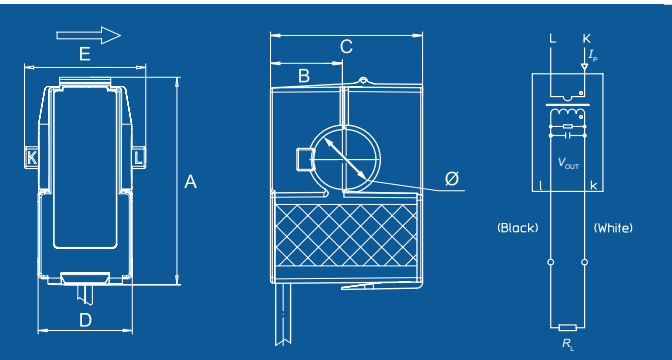

	A	B	C	D	E	Ø
mm	56.1	19.3	40.8	25.8	33.2	16

Features

- Split-core current transformer
- Rated primary current: 60 A - 63 A - 75 A - 100 A - 125 A
- Application up to 600 V CAT III PD2, basic insulation
- Accuracy class 1 (IEC 61869-2)
- Voltage output 225 mV at I_{Pr}
- ⌀ 16 mm sensing aperture
- 1 m output cable
- Ambient temperature −10 °C … +55 °C
- Very low cost solution
- Slot for attaching the C.T. on the primary with plastic tie
- DIN rail adapter (optional).

Advantages

- No interruption of electricity during installation on insulated conductors
- Quick, non-intrusive and easy setup
- Provide a calibrate output.

Applications

- Hybrid inverter (Home Energy Storage)
- Power metering: current measurement for active power calculation
- Building sub-metering: energy efficiency monitoring, consumption analysis and cost allocation
- Power quality monitoring: electrical loads and distribution system equipment
- Distributed measurement systems
- Condition monitoring (e.g. Motor loads such as conveyers, pumps).

Standards

- IEC 61010-1: 2010
- IEC 61010-031 ed1.1: 2012
- IEC 61869-1 ed1.0: 2007
- IEC 61869-2: ed1.0: 2012
- IEC 61869-6: draft 2016
- IEC 61869-10: draft 2016
- UL 508: 2013.

N°52.D4.27.000.0; N°52.D4.G8.000.0; N°52.D4.30.000.0; N°52.D4.34.000.0; N°52.D4.36.000.0;

LEM reserves the right to carry out modifications on its transducers, in order to improve them, without prior notice

LEM City answers the demand for an accurate, reliable and easy to install energy sensor for future Smart Cities.

LEMcity www.lemcity.com

Absolute maximum ratings

Parameter	Symbol	Unit	Value
Primary conductor temperature	T_B	°C	100

Stresses above these ratings may cause permanent damage.
Exposure to absolute maximum ratings for extended periods may degrade reliability.

UL 508: Ratings and assumptions of certification

File # E189713 Volume: 2 Section: 8

Standards

- CSA C22.2 NO. 14-10 INDUSTRIAL CONTROL EQUIPMENT - Edition 11 - Revision Date 2011/08/01
- UL 508 STANDARD FOR INDUSTRIAL CONTROL EQUIPMENT - Edition 17 - Revision Date 2013/10/16

For use only in complete equipment where the acceptability of the combination is determined by UL.LLC.

Ratings

Parameter	Symbol	Unit	Value
Primary involved potential		V AC/DC	1000
Max surrounding air temperature	T_A	°C	70
Primary current	I_P	A	125

Conditions of acceptability

When installed in the end-use equipment, consideration shall be given to the following:
- *These devices must be mounted in a suitable end-use enclosure.*
- *The terminals have not been evaluated for field wiring*
- *The products shall be used in a pollution degree 2*
- *Based on results of temperature test, in the end-use application a maximum of 100 °C can not be exceeded on the primary conductor.*

Marking

Only those products bearing the UL or UR Mark should be considered to be Listed or Recognized and covered under UL's Follow-Up Service. Always lood for the Mark on the product.

LEM City answers the demand for an accurate, reliable and easy to install energy sensor for future Smart Cities.
LEMcity www.lemcity.com