Function and technology used in handwheels

The change from a handwheel directly coupled to the spindle or axes to CNC-controlled axes has meant dramatic new developments for the handwheels. The rotation of the handwheel generates square-wave outputs. The CNC axis controller evaluates the pulses and so signals the axis to move. With over 20 years of handwheel experience, EUCHNER provides a wide selection of handwheels built with the finest quality and highest possible reliability.

Daily use of handwheels places high demands on the mechanical functioning. With twin bearings and a wear-free detent mechanism, the EUCHNER handwheels are the optimum choice for trouble-free operation. The detent moment maintains position even in the event of machine vibration. The detent moment and 100 or 25 pulses per revolution allow a desired value to be set quickly, reliably and accurately. In addition to the manual positioning of axes with CNC-controlled machines, EUCHNER also offers handwheels used for medical and telecommunication applications. EUCHNER also offers handwheels for these applications.

Magnetic detent mechanism

Handwheels with magnetic detent are characterized by their absolutely wear-free and noiseless detent mechanism.

With 100 detent positions (100 or 25 pulses)

The detent mechanism is generated by a magnetic field. A combination of 100 magnetic north/south positions is generated by the opposing magnetic fields with one revolution of the handwheel. Thanks to an air gap, the detent mechanism has no wear and is absolutely maintenance-free. With two ball bearings, the bearing assembly of the handwheel can withstand high axial and radial forces. Different circuit outputs are available for all current control systems.

There are three different designs available:

- Design HKB
  - Ideal for flat machine panels and small, light hand-held pendant stations.

Handwheel HKB

- Design HKC
  - Suitable for installation in operator panels
  - Its design makes it particularly suitable for flat operator panels

Handwheel HKC

- Design HKD
  - Suitable for installation in operator panels and EUCHNER hand-held pendant stations from series HBL
  - Suitable for installation in universal turning and milling machines for axis movement, for example

Handwheel HKD

Mechanical detent mechanism

Handwheels with mechanical detent are characterized by their light weight and shallow mounting depth.

With 100 detent positions (100 or 25 pulses)

A toothed rotor working in conjunction with a roller creates the detent mechanism. The roller is pushed between the teeth of the rotor by a spring and dial. The detent moment is produced by the movement of the roller over the teeth.

There are two different designs available:

- Design HWA
  - Suitable for installation in operator panels.
  - Suitable for installation in EUCHNER hand-held pendant stations
  - With center point fixing

Handwheel HWA

- Design HWB
  - Suitable for installation in operator panels
  - With 3-point fixing

Handwheel HWB

Handwheel HKB

- **100 detent positions per revolution**
- **Wear-free magnetic detent mechanism**
- **100 or 25 pulses per revolution**
- **Key function in axial direction optional**
- **Ideal for flat operator panels and small, light hand-held pendant stations like HBA/HBM**

Notes

- Output A05 suitable for Siemens control systems with RS422 input
- Output G05 suitable for Fanuc control systems
- Dial: see accessories page 72
- Front panel: see accessories page 72

Dimension drawing

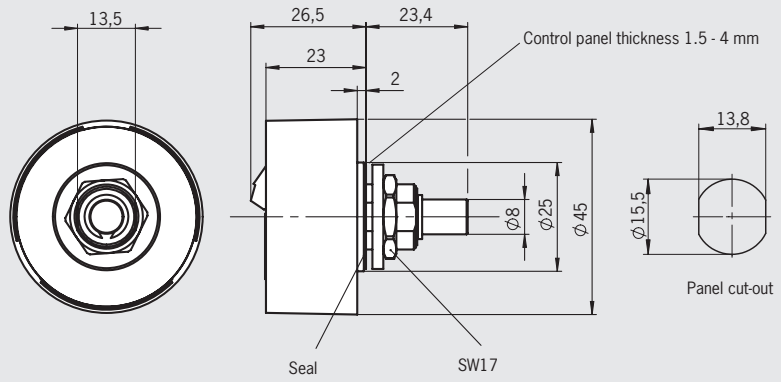

Version with key function

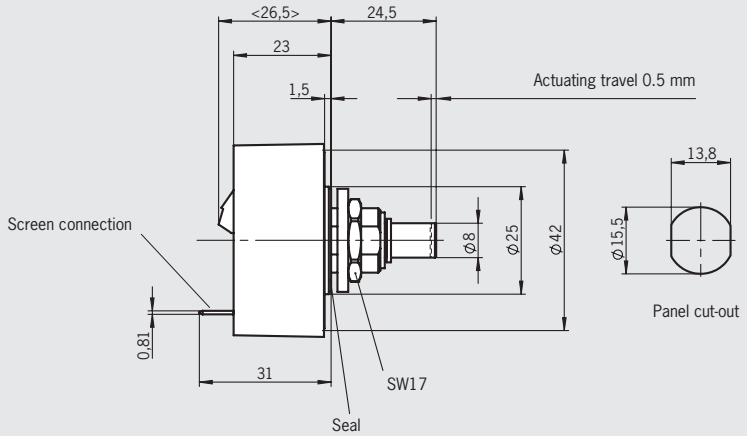

Ordering table

Series	Number of pulses per revolution	Connection	Detent positions	Outputs	Order No./item
HKB	25	**S** Screw terminal	100	**G12** Push-pull 5 V U_B = 10 ... 30 V DC	**105137** HKB025S7G12
	100	**S** Screw terminal	100	**A05** RS422A U_B = 5 V DC	**105134** HKB100S7A05
				A12 RS422A U_B = 10 ... 30 V DC	**105135** HKB100S7A12
				G05 5 V push-pull U_B = 5 V DC	**105136** HKB100S7G05
				G24 Push-pull 10...30 V U_B = 10 ... 30 V DC	**105138** HKB100S7G24
HKB with key function	100	**S** Screw terminal	100	**A05** RS422A U_B = 5 V DC	**109429** HKB100S7A05K

Technical data

Parameter		Value		Unit
Pulses per revolution		2 x 25 or 2 x 100		
Detent positions		100		
Housing material		Aluminum		
Weight		0.095		kg
Detent mechanism		Magnetic		
Shaft loading, axial, max.		25		N
Shaft loading, radial, max.		40		N
Mechanical life, min.		5×10^6		Rev.
Operating temperature		0 ... +50		°C
Storage temperature		-20 ... +50		°C
Atmospheric humidity, max.		80% (condensation not permissible)		
Front degree of protection	acc. to EN 60529/IEC 529	IP 65		
	acc. to NEMA 250	250-12		
Resistance to vibration Vibrations (3 axes) Shock (3 axes)		 DIN/IEC 68-2-6 DIN/IEC 68-2-27		
EMC protection requirements in accordance with CE		EN 61000-6-2, EN 61000-6-4		
Key function				
Mechanical life, min.		1×10^6 actuations		
Actuating travel		0.3 ... 0.7 mm		
Specification output OUT		Output stage		
		A05/G05	A12/G12/G24	
Operating voltage U_B		DC 5 V ± 5 %	DC 10 ... 30 V	
Output voltage	HIGH (1), min.	4.0 V/0 mA	–	
		3.4 V/5 mA	–	
		3.0 V/20 mA	U_B - 3 V/20 mA	
	LOW (0), max.	1.3 V/15 mA	3 V/20 mA	
Output circuit RS422A				
Output stage		**A05**	**A12**	
Output signals		A, /A, B, /B		
Operating voltage U_B		5 ± 5 %	10 ... 30	V DC
Operating current, no load, max.		80		mA
Output circuit		According to RS422A, use RS422 differential receiver module		
Output signals cw (clockwise rotation)		25 pulses 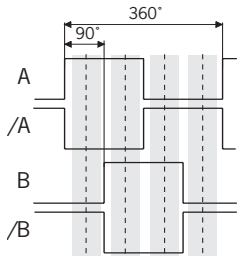 	100 pulses 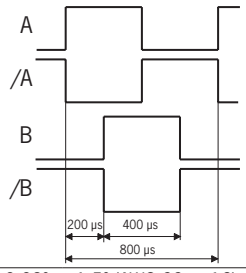 	
Terminal assignment		Screw terminal, 7-pin, conductor cross-section 0.08² ... 1.5² (AWG 22 ... 16) Tightening torque, max. 0.5 Nm without key function 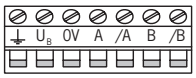 	with key function 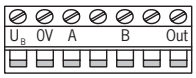 	
Output circuit, push-pull				
Output stage		**G05**	**G12**	**G24**
Output signals		A, B		
Operating voltage U_B		5 ± 5 %	10 ... 30	V DC
Operating current, no load, max.		80		mA
Output voltage	HIGH (1), min.	4.0 V / 0 mA	4.9 V / 0 mA	–
		3.4 V / 5 mA	3.9 V / 5 mA	–
		3.0 V / 20 mA	3.6 V / 20 mA	U_B - 3 V / 20 mA
	LOW (0), max.	1.3 V / 15 mA	1.3 V / 15 mA	3 V / 20 mA
Output current per output, max.		20		mA
Output signals cw (clockwise rotation)		25 pulses 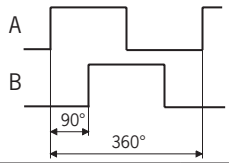 	100 pulses 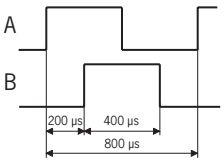 	
Terminal assignment		Screw terminal, 7-pin, conductor cross-section 0.08² ... 1.5² (AWG 22 ... 16) Tightening torque, max. 0.5 Nm without key function 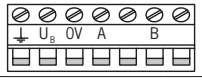 	with key function 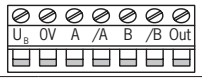 	

Handwheel HKC

- **100 detent positions per revolution**
- **Wear-free magnetic detent mechanism**
- **100 or 25 pulses per revolution**
- **Flat design**

Notes

- Output A05 suitable for Siemens control systems with RS422 input
- Output G05 suitable for Fanuc control systems

Dimension drawing

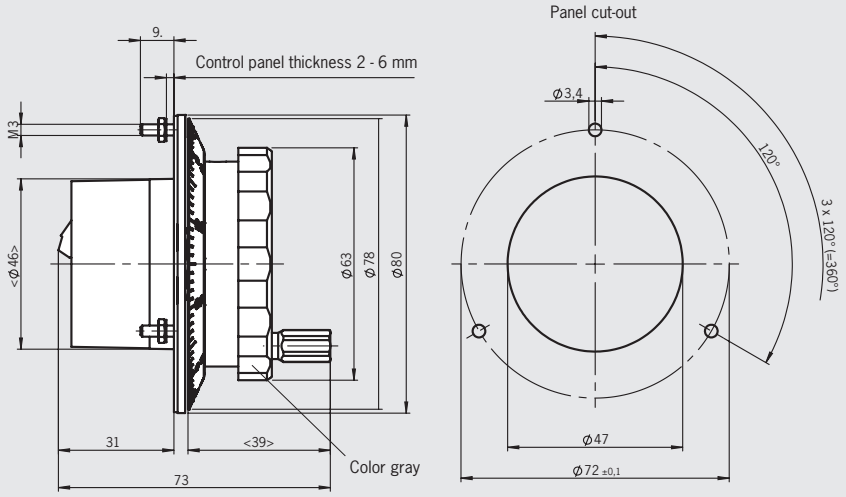

Ordering table

Series	Number of pulses per revolution	Connection	Detent positions	Outputs	Order No./item
HKC	25	**S** Screw terminal	100	**G12** Push-pull 5 V U_B = 10 ... 30 V DC	**072940** HKC025S100G12
	100	**S** Screw terminal	100	**A05** RS422A U_B = 5 V DC	**087733** HKC100S100A05
				G05 Push-pull 5 V U_B = 5 V DC	**082573** HKC100S100G05
				G24 Push-pull 10...30 V U_B = 10 ... 30 V DC	**087739** HKC100S100G24

Technical data

Parameter		Value			Unit
Pulses per revolution		2 x 25 or 2 x 100			
Detent positions		100			
Housing material		Plastic/metal			
Weight		0.25			kg
Detent mechanism		Magnetic			
Shaft loading, axial, max.		25			N
Shaft loading, radial, max.		40			N
Mechanical life, min.		5 x 10^6			Rev.
Operating temperature		0 ... +50			°C
Storage temperature		-20 ... +50			°C
Atmospheric humidity, max.		80% (condensation not permissible)			
Front degree of protection	acc. to EN 60529/IEC 529	IP 65			
	acc. to NEMA 250	250-12			
Resistance to vibration Vibrations (3 axes) Shock (3 axes)		 DIN/IEC 68-2-6 DIN/IEC 68-2-27			
EMC protection requirements in accordance with CE		EN 61000-6-2, EN 61000-6-4			
Output circuit RS422A					
Output stage		**A05**			
Output signals		A, /A, B, /B			
Operating voltage U_B		5 ± 5 %			V DC
Operating current, no load, max.		80			mA
Output circuit		According to RS422A, use RS422 differential receiver module			
Output signals cw (clockwise rotation)		25 pulses 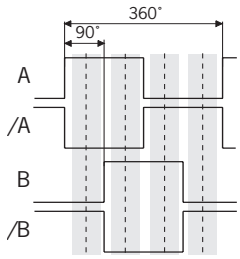 	100 pulses 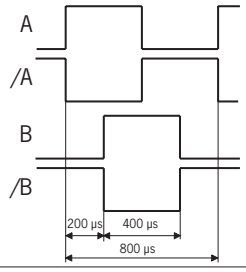 		
Terminal assignment		Screw terminal S 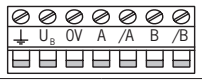 			
Output circuit, push-pull					
Output stage		**G05**	**G12**	**G24**	
Output signals		A, B			
Operating voltage U_B		5 ± 5 %	10 ... 30		V DC
Operating current, no load, max.		80			mA
Output voltage	HIGH (1), min.	4.0 V / 0 mA	4.9 V / 0 mA	–	
		3.4 V / 5 mA	3.9 V / 5 mA	–	
		3.0 V / 20 mA	3.6 V / 20 mA	U_B - 3 V / 20 mA	
	LOW (0), max.	1.3 V / 15 mA	1.3 V / 15 mA	3 V / 20 mA	
Output current per output, max.		20			mA
Output signals cw (clockwise rotation)		25 pulses 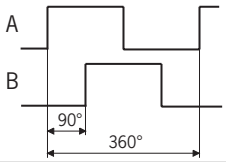 	100 pulses 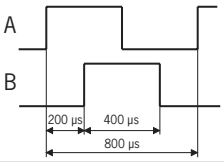 		
Terminal assignment		Screw terminal S 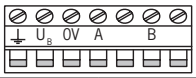 			

Handwheel HKD

- **100 detent positions per revolution**
- **Wear-free magnetic detent mechanism**
- **100 or 25 pulses per revolution**
- **Installation in operator panels and EUCHNER hand-held pendant stations HBL**

Notes

- Output A05 suitable for Siemens control systems with RS422 input
- Output G05 suitable for Fanuc control systems
- Dial: see accessories page 72
- Front panel: see accessories page 72

Mounting depth l

Connection	l [mm]
Screw terminal S	55
Ribbon cable, 6-pin V	53

Dimension drawing

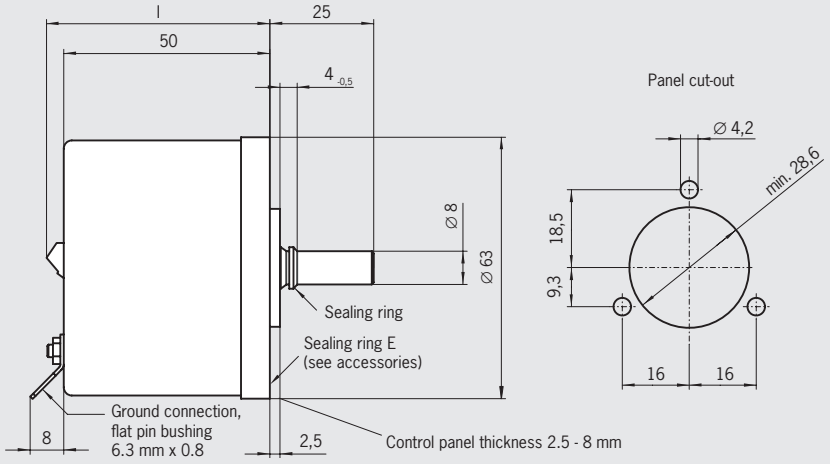

Ordering table

Series	Number of pulses per revolution	Connection	Detent positions	Outputs	Order No./item
HKD	25	**S** Screw terminal	100	**G12** Push-pull 5 V U_B = 10 ... 30 V DC	**091525** HKD025S100G12
		V Ribbon cable 6-pin with plug	100	**G12** Push-pull 5 V U_B = 10 ... 30 V DC	**091526** HKD025V100G12
	100	**S** Screw terminal	100	**A05** RS422A U_B = 5 V DC	**054866** HKD100S100A05
				G05 Push-pull 5 V U_B = 5 V DC	**083354** HKD100S100G05
				G24 Push-pull 10...30 V U_B = 10 ... 30 V DC	**054868** HKD100S100G24
		V Ribbon cable 6-pin with plug	100	**A05** RS422A U_B = 5 V DC	**057036** HKD100V100A05
				G05 Push-pull 5 V U_B = 5 V DC	**091527** HKD100V100G05
				G24 Push-pull 10...30 V U_B = 10 ... 30 V DC	**057037** HKD100V100G24

Technical data

Parameter		Value			Unit
Pulses per revolution		2 x 25 or 2 x 100			
Detent positions		100			
Housing material		Aluminum			
Weight		0.5			kg
Detent mechanism		Magnetic			
Shaft loading, axial, max.		25			N
Shaft loading, radial, max.		40			N
Mechanical life, min.		20 x 10^6			Rev.
Operating temperature		0 ... +70			°C
Storage temperature		-25 ... +85			°C
Atmospheric humidity, max.		80% (condensation not permissible)			
Front degree of protection	acc. to EN 60529/IEC 529	IP 65			
	acc. to NEMA 250	250-12			
Resistance to vibration Vibrations (3 axes) Shock (3 axes)		 DIN/IEC 68-2-6 DIN/IEC 68-2-27			
EMC protection requirements in accordance with CE		EN 61000-6-2, EN 61000-6-4			
Output circuit RS422A					
Output stage		**A05**			
Output signals		A, /A, B, /B			
Operating voltage U_B		5 ± 5 %			V DC
Operating current, no load, max.		80			mA
Output circuit		According to RS422A, use RS422 differential receiver module			
Output signals cw (clockwise rotation)		25 pulses 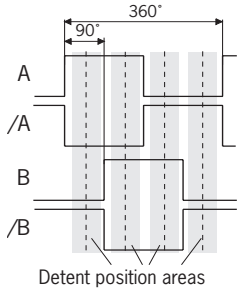 		100 pulses 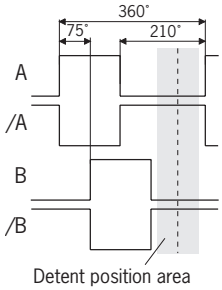 	
Terminal assignment		Ribbon cable V 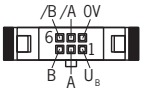 		Screw terminal S 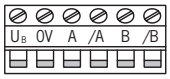 	
Output circuit, push-pull					
Output stage		**G05**	**G12**	**G24**	
Output signals		A, B			
Operating voltage U_B		5 ± 5 %	10 ... 30		V DC
Operating current, no load, max.		80			mA
Output voltage	HIGH (1), min.	4.0 V / 0 mA	4.9 V / 0 mA	–	
		3.4 V / 5 mA	3.9 V / 5 mA	–	
		3.0 V / 20 mA	3.6 V / 20 mA	U_B - 3 V / 20 mA	
	LOW (0), max.	1.3 V / 15 mA	1.3 V / 15 mA	3 V / 20 mA	
Output current per output, max.		20			mA
Output signals cw (clockwise rotation)		25 pulses 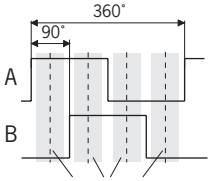 		100 pulses 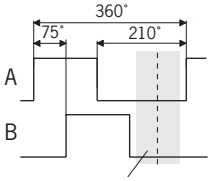 	
Terminal assignment		Ribbon cable V 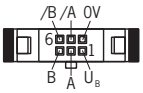 		Screw terminal S 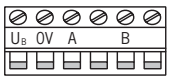 	

Handwheel HWA

- **100 detent positions per revolution**
- **Mechanical detent mechanism**
- **100 or 25 pulses per revolution**
- **Center point fixing**

Dimension drawing

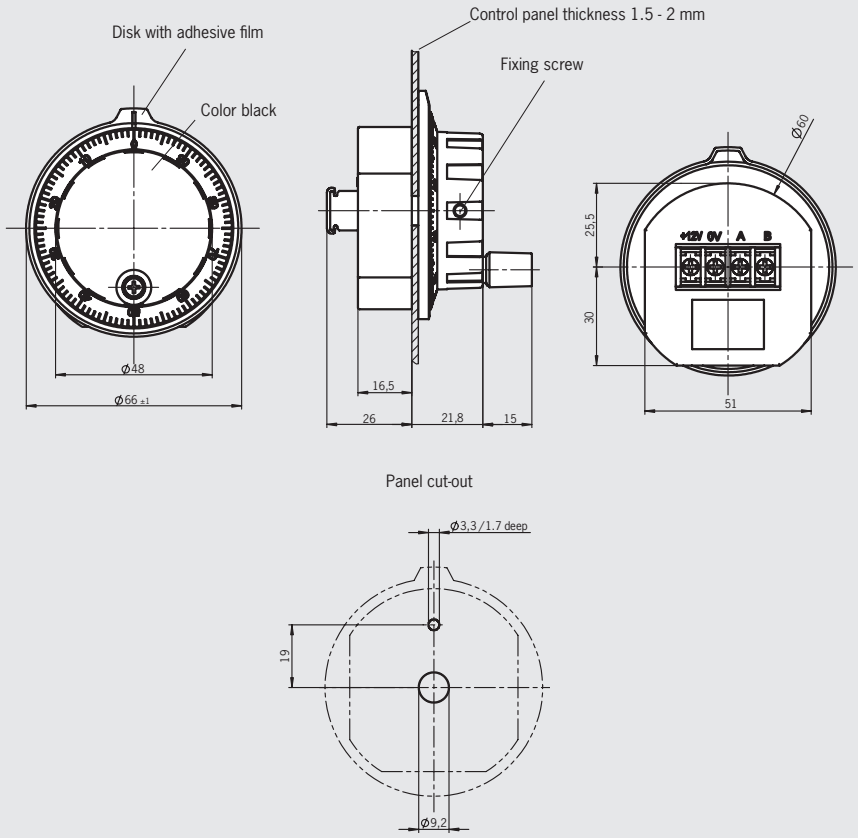

Notes

- Output A05 suitable for Siemens control systems with RS422 input
- Output G05 suitable for Fanuc control systems
- Packaging unit 10 pieces

Ordering table

Series	Number of pulses per revolution	Connection	Detent positions	Outputs	Order No./item
HWA Packaging unit 10 ea.	**25**	**T** Screw terminal	**100**	**G12** Push-pull 5 V U_B = 12 V DC	**072972** HWA025T100G12/V10 (10 ea.)
	100	**T** Screw terminal	**100**	**A05** RS422A U_B = 5 V DC	**072970** HWA100T100A05/V10 (10 ea.)
				G05 Push-pull 5 V U_B = 5 V DC	**072971** HWA100T100G05/V10 (10 ea.)

Technical data

Parameter		Value		Unit
Pulses per revolution		2 x 25 or 2 x 100		
Detent positions		100		
Housing material		Plastic/metal		
Weight		0.1		kg
Detent mechanism		Mechanical		
Shaft loading, axial, max.		25		N
Shaft loading, radial, max.		40		N
Mechanical life, min.		1 x 10^6		Rev.
Operating temperature		0 ... +50		°C
Storage temperature		-20 ... +50		°C
Atmospheric humidity, max.		80% (condensation not permissible)		
Front degree of protection	acc. to EN 60529/IEC 529	IP65		
	acc. to NEMA 250	250-12		
Output circuit RS422A				
Output stage		**A05**		
Output signals		A, /A, B, /B		
Operating voltage U_B		5 ± 10 %		V DC
Operating current, no load, max.		80		mA
Output specifications		According to RS422A, use RS422 differential receiver module		
Output signals cw (clockwise rotation)		100 pulses 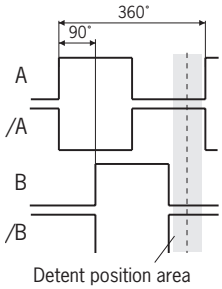		
Terminal assignment		Screw terminal T 		
Output circuit, push-pull				
Output stage		**G05**	**G12**	
Output signals		A, B		
Operating voltage U_B		5 ± 10 %	12 ± 10 %	V DC
Operating current, no load, max.		20		mA
Output voltage	HIGH (1), min.	4.0 V / 20 mA		
	LOW (0), max.	0.5 V / 20 mA		
Output current per output, max.		20		mA
Output signals CW (clockwise rotation)		100 pulses 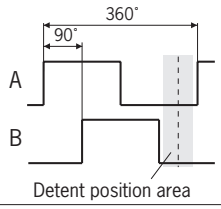	25 pulses 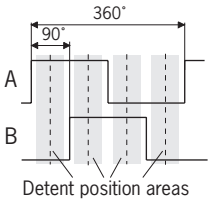	
Terminal assignment		Screw terminal T 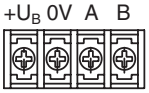		

Handwheel HWB

- **100 detent positions per revolution**
- **Mechanical detent mechanism**
- **100 or 25 pulses per revolution**
- **3-point fixing**

Dimension drawing

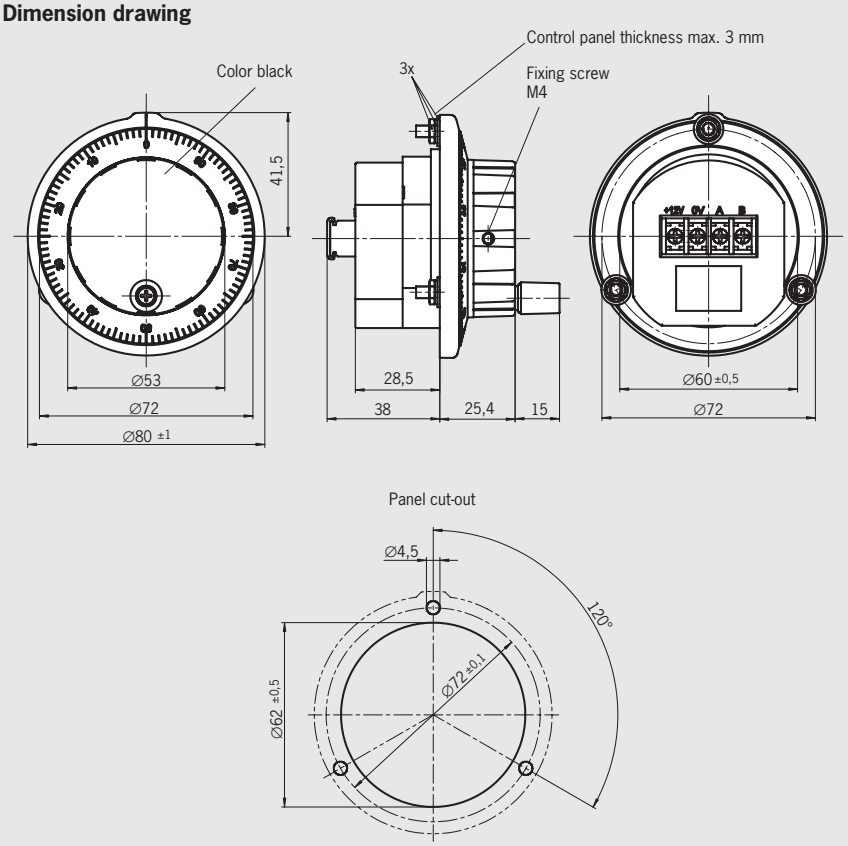

Notes

- Output A05 suitable for Siemens control systems with RS422 input
- Output G05 suitable for Fanuc control systems

Ordering table

Series	Number of pulses per revolution	Connection	Detent positions	Outputs	Order No./item
HWB Packaging unit 5 ea.	**25**	**T** Screw terminal	**100**	**G12** Push-pull 5 V U_B = 12 V DC	**072975** HWB025T100G12/V05 (5 ea.)
	100	**T** Screw terminal	**100**	**A05** RS422A U_B = 5 V DC	**072973** HWB10T100A05/V05 (5 ea.)
				G05 Push-pull 5 V U_B = 5 V DC	**072974** HWB100T100G05/V05 (5 ea.)

Technical data

Parameter		Value		Unit
Pulses per revolution		2 x 25 or 2 x 100		
Detent positions		100		
Housing material		Plastic/metal		
Weight		0.125		kg
Detent mechanism		Mechanical		
Shaft loading, axial, max.		25		N
Shaft loading, radial, max.		40		N
Mechanical life, min.		1 x 10^6		Rev.
Operating temperature		0 ... +50		°C
Storage temperature		-20 ... +50		°C
Atmospheric humidity, max.		80% (condensation not permissible)		
Front degree of protection	acc. to EN 60529/IEC 529	IP65		
	acc. to NEMA 250	250-12		
Output circuit RS422A				
Output stage		**A05**		
Output signals		A, /A, B, /B		
Operating voltage U_B		5 ± 10 %		V DC
Operating current, no load, max.		80		mA
Output specifications		According to RS422A, use RS422 differential receiver module		
Output signals cw (clockwise rotation)		100 pulses 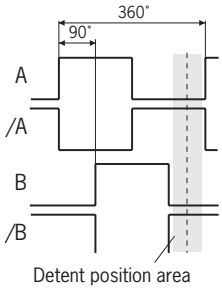 		
Terminal assignment		Screw terminal T  		
Output circuit, push-pull				
Output stage		**G05**	**G12**	
Output signals		A, B		
Operating voltage U_B		5 ± 10 %	12 ± 10 %	V DC
Operating current, no load, max.		20		mA
Output voltage	HIGH (1), min.	4.0 V / 20 mA		
	LOW (0), max.	0.5 V / 20 mA		
Output current per output, max.		20		mA
Output signals CW (clockwise rotation)		100 pulses 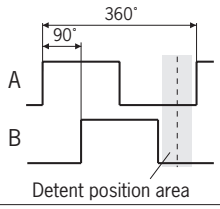 	25 pulses 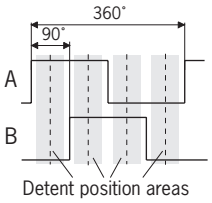 	
Terminal assignment		Screw terminal T 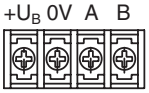 		

Accessories

Front panel for handwheel HKB

▶ Front panel with bonded seal

Ordering table

Item	Order no.
Front panel for handwheel HKB with dial 100914, anodized silver	**105072**
Front panel for handwheel HKB with dial 100914, anodized black	**105073**

Dimension drawing

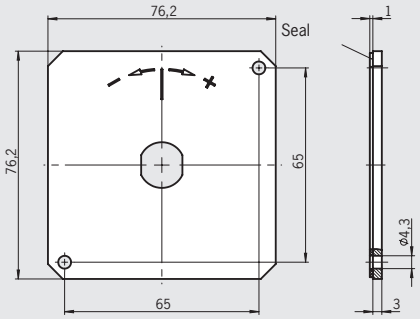

Front panel for handwheel HKD

▶ Front panel with bonded seal
▶ Seal handwheels without front panel with sealing ring E

Dimensions

Design	e	f	g	h	k	m	n	p	s	r
F	110	110	90	90	-	-	DIN74-Am5	-	-	R48
G	108	108	89	89	-	-	5.2	-	-	R48
M	76.2	76.2	-	-	65	65	4.2	-	-	R35.5

Ordering table

Item	Order no.
Sealing ring E	**054861**
Front panel F with seal	**028760**
Front panel G with seal	**028761**
Front panel M with seal	**041758**

Dimension drawing

Front panel F, G, M

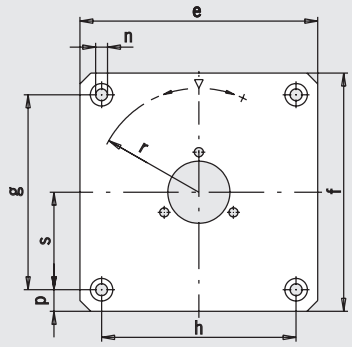

Dials for handwheel HKB

Ordering table

Item	Order no.
Dial 58 mm silver, metal with crank [1]	**100914**
Dial 66.5 mm silver, metal with finger recess [1] [2]	**111992**
Dial 66.5 mm black, plastic with finger recess [2]	**105961**

1) Suitable for installation in operator panels

2) For use of handwheel HKB in the kits for hand-held pendant stations HBA and HBM

Dimension drawing

Dial 58 mm silver, 100914

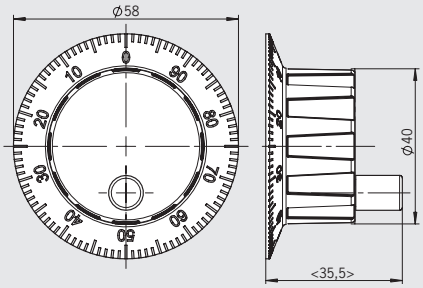

Dial 66.5 mm silver, 111992

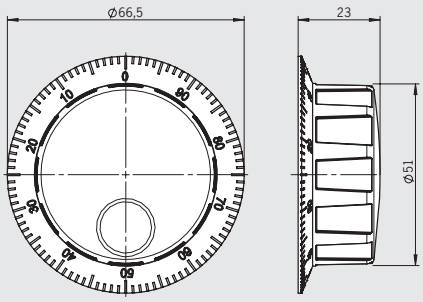

Dial 66.5 mm black, 105961

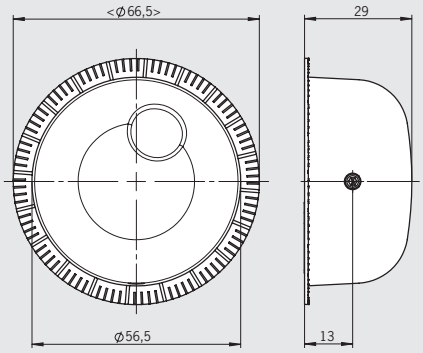

Dials for handwheel HKD

Dimensions

Design	∅ a	∅ b	c
Dial 90 mm	90	63	41
Dial 78 mm	78	63	39
Dial 75 mm	75	63	39
Dial 65 mm	65	44	42
Dial 58 mm	58	44	40

Ordering table

Item	Order no.
Dial 90 mm black	**057266**
Dial 90 mm silver	**057268**
Dial 78 mm black	**057280**
Dial 78 mm silver	**057272**
Dial 75 mm black	**072633**
Dial 75 mm silver	**072597**
Dial 65 mm black, for HBL kit	**057318**
Dial 65 mm silver, for HBL kit	**057314**
Dial 58 mm black	**059276**

Dimension drawing