Allen-Bradley

SLC 500 Modular Hardware Style

Catalog Numbers
1747-L511, 1747-L514, 1747-L524, 1747-L531, 1747-L532, 1747-L533, 1747-L541, 1747-L542, 1747-L543, 1747-L551, 1747-L552, 1747-L553

User Manual

Rockwell Automation

Important User Information

Solid state equipment has operational characteristics differing from those of electromechanical equipment. Safety Guidelines for the Application, Installation and Maintenance of Solid State Controls (publication SGI-1.1 available from your local Rockwell Automation sales office or online at http://literature.rockwellautomation.com) describes some important differences between solid state equipment and hard-wired electromechanical devices. Because of this difference, and also because of the wide variety of uses for solid state equipment, all persons responsible for applying this equipment must satisfy themselves that each intended application of this equipment is acceptable.

In no event will Rockwell Automation, Inc. be responsible or liable for indirect or consequential damages resulting from the use or application of this equipment.

The examples and diagrams in this manual are included solely for illustrative purposes. Because of the many variables and requirements associated with any particular installation, Rockwell Automation, Inc. cannot assume responsibility or liability for actual use based on the examples and diagrams.

No patent liability is assumed by Rockwell Automation, Inc. with respect to use of information, circuits, equipment, or software described in this manual.

Reproduction of the contents of this manual, in whole or in part, without written permission of Rockwell Automation, Inc., is prohibited.

Throughout this manual, when necessary, we use notes to make you aware of safety considerations.

WARNING	Identifies information about practices or circumstances that can cause an explosion in a hazardous environment, which may lead to personal injury or death, property damage, or economic loss.
IMPORTANT	Identifies information that is critical for successful application and understanding of the product.
ATTENTION	Identifies information about practices or circumstances that can lead to personal injury or death, property damage, or economic loss. Attentions help you identify a hazard, avoid a hazard, and recognize the consequence
SHOCK HAZARD	Labels may be on or inside the equipment, for example, a drive or motor, to alert people that dangerous voltage may be present.
BURN HAZARD	Labels may be on or inside the equipment, for example, a drive or motor, to alert people that surfaces may reach dangerous temperatures.

The information below summarizes the changes to this manual since the last printing.

To help you find new and updated information in this release of the manual, we have included change bars as shown to the right of this paragraph.

For information on	See
Processor communication options for Modbus RTU Master	page 33, page 34, page 35
Modbus RTU feature on the SLC 5/03 processor	page 86, page 88
Modbus RTU feature on the SLC 5/04 processor	page 89, page 91
Modbus RTU feature on the SLC 5/05 processor	page 92, page 94
Modbus RTU Master communication	page 202, page 210

Notes:

Preface

Who Should Use This Manual 13
Purpose of This Manual 13
Additional Resources 14
Common Techniques Used in This Manual 14

Chapter 1

Quick Start for Experienced Users

Required Tools and Equipment 16
Procedures 16

Chapter 2

Selecting Your Hardware Components

European Union Directive Compliance 28
EMC Directive 28
Low Voltage Directive 28
Overview of Your Modular Control System 29
Principles of Machine Control 30
Selecting Modular Processors 31
Processor Features 31
Processor Communication Options 32
Selecting Discrete I/O Modules 36
Selecting Specialty I/O Modules 36
Selecting Power Supplies 36
1746-P7 Current Capacity 37
Example for Selecting Power Supplies 37
Example Worksheet for Selecting a 1746 Power Supply 38
Selecting Enclosures 40
Selecting Operator Interfaces 40
Programming with a Personal Computer 40
AIC+ Advanced Interface Converter (1761-NET-AIC) 40
1747-PIC RS-232/DH485 Interface Converter 40
1747-UIC USB to DH485 Interface Converter 41
Monitoring with a Data Table Access Module 41
Monitoring with a PanelView or PanelView Plus Operator Terminal 41
Selecting a Memory Module for the SLC 5/01 and SLC 5/02 Processors 42
EEPROM Memory Modules 42
Memory Backup for the 1747-L511, SLC 5/01 Processor 43
Selecting a Memory Module for SLC 5/03, SLC 5/04, and SLC 5/05 Processors 43
EEPROM Burning Options 44
Selecting Isolation Transformers 46
Special Considerations 47
Class I, Division 2 Applications 47
Selecting Contact Protection 50

System Installation Recommendations

Chapter 3

System Overview 56
Environment and Enclosure 56
Hazardous Location Considerations 57
Typical Installation 58
Spacing Your Controller 58
Preventing Excessive Heat 60
Grounding Guidelines 61
Connect Equipment Grounding Conductor to Ground Bus 61
Connect Ground Bus to Grounding-Electrode System 62
Special Grounding Considerations for dc Applications using 1746-P3 (previous to revision B) 64
Determining the Date of the SLC 500 Series A Chassis 66
Master Control Relay 66
Emergency-Stop Switches 67
Power Considerations 68
Common Power Source 68
Isolation Transformer 68
Grounded ac Power-Distribution System with Master-Control Relay 69
Power Supply Required Input Voltage Characteristics 69
Loss of Power Source 70
Input States on Power Down 70
Power Supply Undervoltage Operation 70
SLC 500 Operation with 24V dc User Power Overcurrent Condition 71
Safety Considerations 72
Disconnecting Main Power 72
Safety Circuits 72
Power Distribution 72
Periodic Tests of Master Control Relay Circuit 72
Preventive Maintenance 73

Mounting Your SLC 500 Control System

Chapter 4

Mounting Modular Hardware Style Units 75
4-slot Modular Chassis 75
7-slot Modular Chassis 76
10-slot Modular Chassis 76
13-slot Modular Chassis 77
Link Coupler (AIC) 78
Data Table Access Module (DTAM, DTAM Plus, and DTAM Micro) 79
AIC+ Advanced Interface Converter (1761-NET-AIC)
DeviceNet Interface (1761-NET-DNI)
Ethernet Interface (1761-NET-ENI) 80

Identifying the Components of Your Processor

Chapter 5

SLC 5/01 Processor Hardware Features. 81
SLC 5/02 Processor Hardware Features. 83
SLC 5/03 Processor Hardware Features. 86
SLC 5/04 Processor Hardware Features. 89
SLC 5/05 Processor Hardware Features. 92
Keyswitch for the SLC 5/03, SLC 5/04, and SLC 5/05 Processors . . 95
RUN Position. 95
PROG Position 95
REM Position. 96

Installing Your Hardware Components

Chapter 6

Compliance to European Union Directives 97
EMC Directive. 97
Low Voltage Directive. 98
Install Your Chassis 98
Installing Your Processor. 101
Install Modules 102
Install Your Memory Module 103
Remove the Memory Module 104
Install Your Power Supply. 104
Install Your Chassis Interconnect Cable. 108

Wiring Your I/O Modules

Chapter 7

Defining Sinking and Sourcing 111
Contact Output Circuits — ac or dc. 112
Solid-State dc I/O Circuits 112
Preparing Your Wiring Layout 114
Recommendations for Wiring I/O Devices 115
Features of an I/O Module 116
Wiring Your I/O Module 116
Octal Label Kit Installation 117
Apply the Octal Filter Label 117
Apply the Octal Door Label 117
Octal Kit and I/O Module Information. 118
Using the Removable Terminal Block (RTB) 119
Remove the RTB 119
Install the RTB. 120

Starting Up Your Control System

Chapter 8

Procedures for Starting the Control System 121
1. Inspect Your Installation 122
2. Disconnect Motion-Causing Device 122
3. Initialize and Test Your Processor 123
4. Test Your Inputs 125

Input Troubleshooting Steps. 126
5. Test Your Outputs 126
Output Troubleshooting Steps 128
6. Enter and Test Your Program. 129
7. Observe Control Motion 131
8. Conduct a Dry Run 132

Chapter 9

Maintaining Your Control System

Handling and Storing Battery, Catalog Number 1747-BA. 133
Handling. 133
Storing 134
Transporting. 134
Disposal 135
Install and Replace the Battery of the SLC 5/01 or SLC 5/02 Processor 136
Replace Your SLC 5/03, SLC 5/04, or SLC 5/05 Battery 137
Replacing Retainer Clips on an I/O Module 138
Remove Damaged Retainer Clips 139
Install New Retainer Clips. 139
Replace a Fuse on the Power Supply 139

Chapter 10

Troubleshooting

Contacting Rockwell Automation for Assistance. 141
Tips for Troubleshooting Your Control System 142
Removing Power 142
Replacing Fuses 143
Program Alteration 143
Troubleshooting the SLC 5/01 and SLC 5/02 Processors 143
Identifying SLC 5/01 and SLC 5/02 Processor Errors. 144
Identifying SLC 5/02 Processor Communication Errors 148
Troubleshooting the SLC 5/03, SLC 5/04, and SLC 5/05 Processors 149
Clearing SLC 5/03, SLC 5/04, and SLC 5/05 Processor Faults Using the Keyswitch. 149
Identifying SLC 5/03, SLC 5/04, and SLC 5/05 Processor Errors 150
Identifying SLC 5/03, SLC 5/04, and SLC 5/05 Processor Communication Errors 155
Identifying Processor Errors while Downloading an Operating System. 159
Returning the SLC 5/03, SLC 5/04, and SLC 5/05 Processors to Initial Factory Conditions 161
Troubleshooting Your Input Modules 163
Input Circuit Operation. 163
Troubleshooting Your Input Modules 164

Troubleshooting Your Output Modules 165
Output Circuit Operation 165
Troubleshooting Your Output Modules. 166

Chapter 11

Replacement Parts

Replacement Cables and Connectors 169
Cable Connectivity Summary 170
Replacement Terminal Blocks. 171
Other Replacement Hardware. 171

Appendix A

Specifications

SLC 500 System General Specifications 175
Processor General Specifications 176
Power Supply Specifications 177
1746-P1, 1746-P2, 1746-P3, and 1746-P4 Power Supplies 177
1746-P5, 1746-P6, and 1746-P7 Power Supplies 179

Appendix B

Setting Up the DH-485 Network

DH-485 Network Description 181
DH-485 Network Protocol 182
DH-485 Token Rotation 182
DH-485 Network Initialization 182
Devices that Use the DH-485 Network 183
1747-AIC Isolated Link Coupler for DH-485 184
1747-UIC USB to DH-485 Interface Converter 185
Example System Configuration 187
Configuring the SLC 5/03, SLC 5/04, and SLC 5/05 Channel 0 for DH485 Protocol 188
Important Planning Considerations 189
Hardware Considerations 189
Software Considerations 191
Installing the DH-485 Network 193
DH-485 Communication Cable and Isolated Link Coupler 193
Installing the DH-485 Communication Cable 193
Connecting the Communication Cable to the Isolated Link Coupler 194
Powering the Link Coupler 196
Installing and Attaching the Link Couplers 199

Appendix C

RS-232 Communication Interface

RS-232 and SCADA Applications 201
RS-232 Communication Interface Overview 201
SLC 5/03, SLC 5/04, and SLC 5/05 processors and RS-232 Communication 202
SLC 500 Devices that Support RS-232 Communication 203
1747-KE Module 203
1746-BAS and 1746-BAS-T Modules 203
DF1 Protocol and the SLC 5/03, SLC 5/04, and SLC 5/05 Processors 204
DF1 Full-duplex Protocol 204
Full-duplex (Point-to-Point) 205
DF1 Half-duplex Protocol 205
DF1 Radio Modem Channel 0 Driver 207
Modbus RTU Master Communication 210
ASCII Communication 210
DF1/Modbus RTU Communication Protocol Modems Overview . 210
Wiring Connectors for RS-232 Communication 211
Types of RS-232 Connectors 211
DTE Pinout 211
DCE Pinout 212
Pin Assignments for Wiring Connectors 213
Applications for the RS-232 Communication Interface. 220
DF1 Full-duplex Peer-to-peer. 220
Half-duplex with Slave-to-slave Routing 220

Appendix D

Setting Up the DH+ Network

Data Highway Plus Communication Protocol Overview 221
SLC 5/04 Processors and DH+ Communication 222
DH+ Channel 1, 3-Pin 222
DH+ Channel 1, 8-Pin 222
Wiring Connectors for DH+ Communication for SLC 5/04 Processors. 224
Minimizing Noise. 225
Typical DH+ Network Configuration 226

Appendix E

Power Supply Worksheet

Power Supply Loading. 227
Blank Worksheet 230

Appendix F

Control Networks

Allen-Bradley Remote I/O Network 231
Remote I/O Passthru 232
DeviceNet Network. 233
The 1747-SDN DeviceNet Scanner 233
The 1761-NET-DNI DeviceNet Interface 234
DeviceNet Network Length 235
ControlNet Network 236
The 1747-SCNR ControlNet Scanner Module 236
The 1747-KFC15 ControlNet Messaging Module. 236

Appendix G

Communicating with Devices on an Ethernet Network

SLC 5/05 Processors and Ethernet Communication. 237
SLC 5/05 Performance Considerations 238
SLC 5/05 Processor and Personal Computer Connections to the Ethernet Network 239
Ethernet Network Topology. 239
Ethernet Channel 1 8-pin 10Base-T Connector. 240
Cables 240
Ethernet Connections 240
Configuring the Ethernet Channel on the SLC 5/05 Processor 241
Configuration Using RSLogix 500 Programming Software. 242
Configuration Via BOOTP 242
Use the Rockwell BOOTP Utility. 244
Using DCHP Software To Configure Your Processor 245
Using Subnet Masks and Gateways. 246
Manually Configuring Channel 1 for Processors on Subnets . . . 247
SLC 5/05 Processor Embedded Web Server Capability 248
Module Information 249
TCP/IP Configuration Data (Read Only) 249
Diagnostic Information. 250
Data Table Memory Map 251
Data Table Monitor. 252
User Provided Pages 253

Appendix H

Calculating Heat Dissipation for the SLC 500 Control System

Definition of Key Terms 261
Calculating Module Heat Dissipation 261
Calculated Watts vs. Total Watts. 262
Power Supply Loading Reference Table. 263
Power Supply Heat Dissipation Graphs. 266
Example Heat Dissipation Calculation 267
Example Worksheet. 268
Blank Worksheet 269

Glossary

Index

Read this preface to familiarize yourself with the rest of the manual. It provides information concerning:

- who should use this manual.
- the purpose of this manual.
- related documentation.
- conventions used in this manual.

Who Should Use This Manual

Use this manual if you are responsible for designing, installing, programming, or troubleshooting control systems that use SLC 500 programmable controllers.

You must have a basic understanding of electrical circuitry and familiarity with relay logic.

Purpose of This Manual

This manual describes the procedures you use to install, wire, and troubleshoot your controller. This manual:

- explains how to install and wire your controllers.
- gives you an overview of the SLC 500 programmable controller system.

Refer to the SLC 500 Instruction Set reference manual, publication 1747-RM001, for the SLC 500 instruction set and for application examples to show the instruction set in use. Refer to your programming software user documentation for more information on programming your SLC 500 programmable controller.

Additional Resources

The table below provides a listing of publications that contain important information about SLC 500 controller systems.

Pub. Number	Pub. Title	Description
1747-SG001	SLC 500 System Overview	An overview of the SLC 500 family of products.
1747-IN007	SLC 5/03 and SLC 5/04 Processors Firmware/Operating System Upgrade Installation Instructions	Details on the latest operating system upgrade to the SLC 5/03 and SLC 5/04 processors.
1747-IN019	SLC 5/05 Processors Firmware/Operating System ControlFlash Upgrade Installation Instructions	Information on the SLC 5/05 ControlFlash upgrade.
1747-RM001	SLC 500 Instruction Set Reference Manual	Detailed information on the SLC instruction set.
1761-UM004	Advanced Interface Converter (AIC+) User Manual	A description on how to install and connect an AIC+ interface. This manual also contains information on network wiring.
1761-UM005	DeviceNet Interface User Manual	Information on how to install, configure, and commission a DNI interface.
1761-UM006	MicroLogix Ethernet Interface User Manual	Information on using the 1761-NET-ENI Ethernet interface.
1770-6.5.16	DF1 Protocol and command Set Reference Manual	Information on DF1 protocol.
GMC-RM001	System Design for Control of Electrical Noise	Information on reducing electrical noise.
1770-4.1	Allen-Bradley Programmable controller Grounding and Wiring Guidelines	Information on grounding and wiring Allen-Bradley programmable controllers.
SGI-1.1	Application Considerations for Solid-state Controls, publication	A description of important differences between solid-state programmable controller products and hard-wired electromechanical devices.
—	National Electrical Code - Published by the National Fire Protection Association of Boston, MA	An article on wire sizes and types for grounding electrical equipment.
AG-7.1	Allen-Bradley Industrial Automation Glossary	A glossary of industrial automation terms and abbreviations.

You can view or download publications at http://literature.rockwellautomation.com. To order paper copies of technical documents, contact your local Rockwell Automation distributor or sales representative.

Common Techniques Used in This Manual

The following conventions are used throughout this manual:

- Bulleted lists, such as this one, provide information, not procedural steps.
- Numbered lists provide sequential steps or hierarchical information.

Quick Start for Experienced Users

This chapter can help you to get started using the SLC 500 Modular Processors. We base the procedures here on the assumption that you have an understanding of SLC 500 products. You should understand electronic process control and be able to interpret the ladder logic instructions required to generate the electronic signals that control your application.

Because it is a start-up guide for experienced users, this chapter does not contain detailed explanations about the procedures listed. It does, however, reference other chapters in this book where you can get more information.

If you have any questions or are unfamiliar with the terms used or concepts presented in the procedural steps, always read the referenced chapters and other recommended documentation before trying to apply the information.

This chapter:

- tells you what tools and equipment you need.
- lists how to install your chassis.
- lists how to install and wire your power supply.
- lists how to install and apply power to your processor.
- lists how to establish communication with the processor.
- describes how to return the SLC 5/03, SLC 5/04, and SLC 5/05 processors to initial factory conditions if required.

Required Tools and Equipment

Have the following tools and equipment ready:

- Medium blade screwdriver
- Programming equipment
- Compatible communication cable and/or interface (The table below indicates with an X, which cables are compatible with the SLC 5/01 through 5/05 processors.)

Network Interface	Processor				
	SLC 5/01	SLC 5/02	SLC 5/03	SLC 5/04	SLC 5/05
1747-UIC	X(1)	X(1)	X(1)(4)	X(4)	X(4)
1747-PIC	X	X	X		
1747-CP3			X	X	X
1784-PKTX(D)	X(2)	X(2)	X(2)	X	
1784-PCMK	X(3)	X(3)	X(3)	X(5)	
10/100Base-T Ethernet					X

(1) Requires 1747-C13 cable.

(2) Requires 1784-CP14 cable.

(3) Requires 1784-PCM4 cable.

(4) Requires 1747-CP3 cable.

(5) Requires 1784-PCM6 cable.

Procedures

1.	Check the contents of the shipping box.	Reference

Unpack the shipping boxes making sure that the contents include:

- SLC 500 modular processor
  - installation instructions (publication 1747-IN009)
- SLC 500 modular chassis (catalog numbers 1746-A4, 1746-A7, 1746-A10, or 1746-A13)
  - installation instructions (publication 1746-IN016)
- SLC 500 modular power supplies (catalog numbers 1746-P1, 1746-P2, 1746-P3, 1746-P4, 1746-P5, 1746-P6, or 1746-P7)
  - installation instructions (publication 1746-IN004)

If the contents are incomplete, call your local Rockwell Automation representative for assistance.

2.	Install the chassis.	Reference
	1. Determine the amount of spacing required for mounting your system.	**Chapter 3 (System Installation Recommendations)**

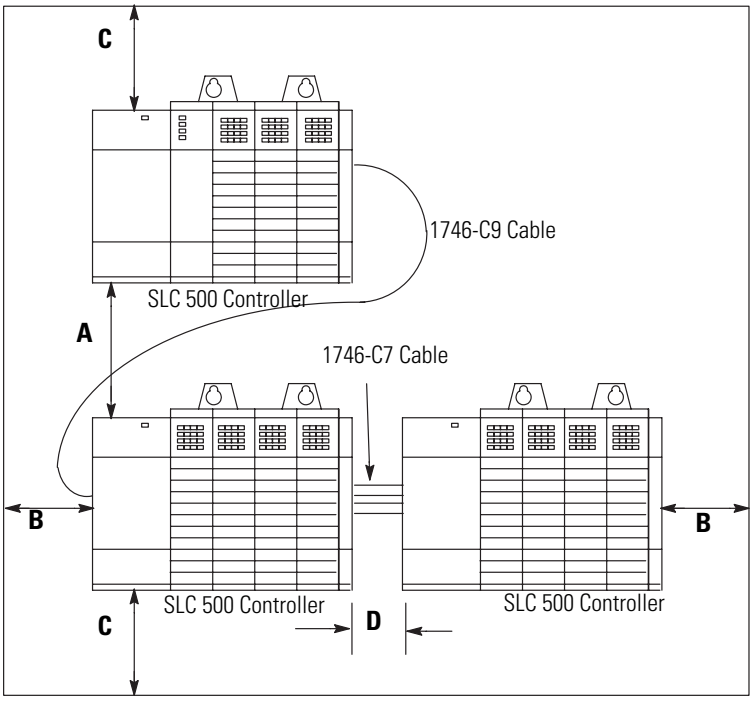

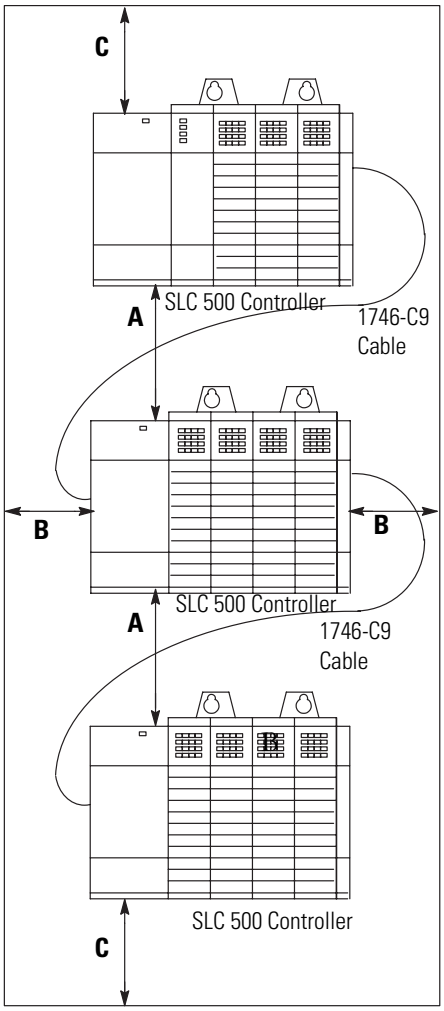

Recommended Spacing

A. 15.3...20.0 cm (6...8 in.) when using the 1746-C9 cable. If you mount two 13-slot chassis above each other, the distance cannot exceed 10.2...12.7 cm (4...5 in.).

B. Greater than 10.2 cm (4 in.).

C. Greater than 15.3 cm (6 in.).

D. 6.35...10.2 cm (2.5...4 in.) when using the 1746-C7 cable. If you are using a 1746-P4 power supply, your maximum spacing is 6.35 cm (2.5 in.).

2. Drill holes in the backpanel of your enclosure and install the top mounting hardware. Use M4 or M5 (#10 or #12) phillips screw and star washer (or SEM screw).

Chapter 6 (Installing Your Hardware Components)

3. Scrape off the paint from the backpanel between the chassis and backpanel.

4. Slide the chassis over the installed hardware and tighten the screws.

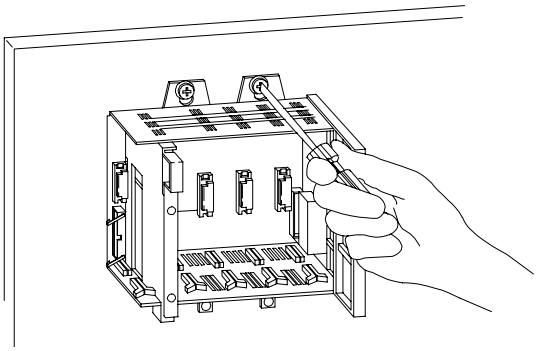

5. Install the remaining tab hardware.

3.	Install the power supply.	Reference
1.	Align the circuit board of the power supply with the card guides on the left side of the chassis, and slide the power supply in until it is flush with the chassis.	**Chapter 6 (Installing Your Hardware Components)**

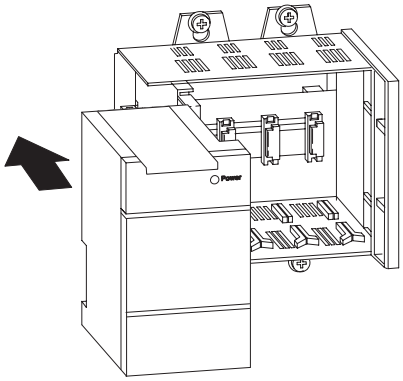

2. Fasten the power supply to the chassis.

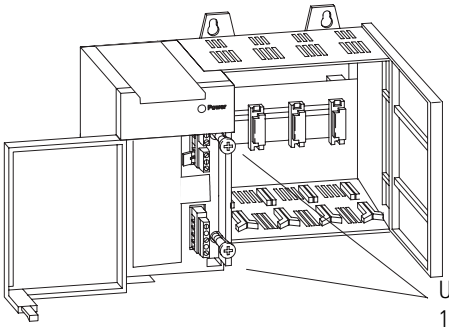

4.	Make jumper selection for 120/240V ac on 1746-P1, 1746-P2, and 1746-P4 power supplies.	Reference
Place the input voltage jumper to match the input voltage. This does not apply to the 1746-P3, 1746-P5, 1746-P6, or 1746-P7 power supplies which do not have jumpers.		**Chapter 6 (Installing Your Hardware Components)**

ATTENTION

Set the input jumper before applying power. Hazardous voltage is present on exposed pins when power is applied; contact with the pin may cause injury to personnel.

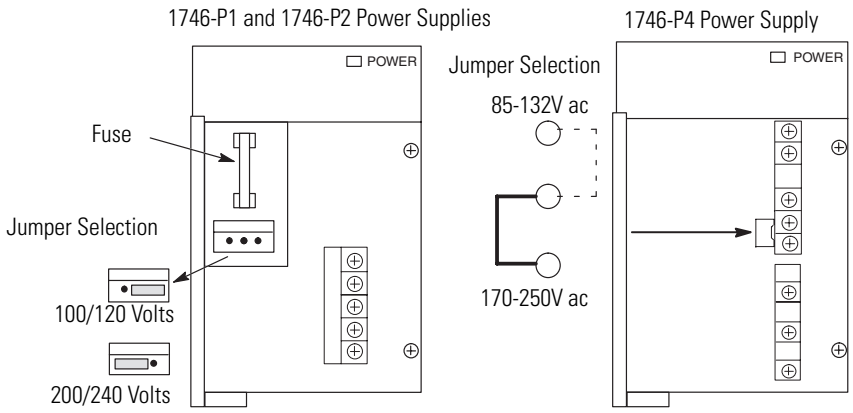

5.	Wire power to the power supply.	Reference
		Chapter 6 (Installing Your Hardware Components)

ATTENTION

Turn off incoming power before connecting wires. Failure to do so could cause injury to personnel and/or equipment.

Connect incoming power.

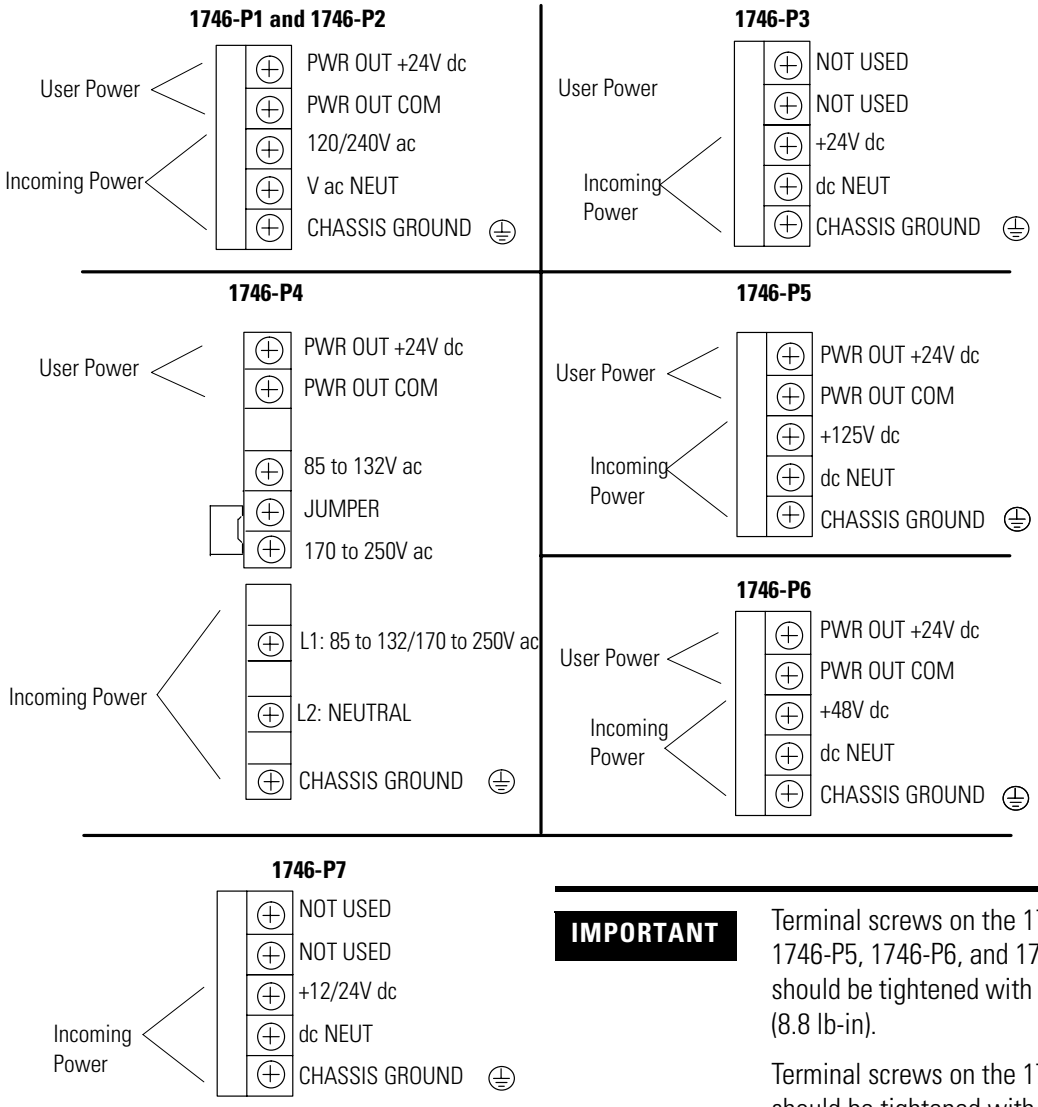

IMPORTANT

Terminal screws on the 1746-P1, 1746-P2, 1746-P3, 1746-P5, 1746-P6, and 1746-P7 power supplies should be tightened with a maximum torque of 1 Nm (8.8 lb-in).

Terminal screws on the 1746-P4 power supply should be tightened with a max torque of 0.8 Nm (7 lb-in).

6.	Install the processor.	Reference

IMPORTANT If your processor has a battery — the battery is an option for the SLC 5/01 (1747-L511) processor — make sure it is connected before installing your processor into the chassis. This provides memory backup for your processor should the controller power supply fail.

Chapter 2 (Selecting Your Hardware Components)

Chapter 6 (Installing Your Hardware Components)

Make sure system power is off. Then insert the processor into the 1746 chassis.

IMPORTANT The SLC 500 modular processor must be inserted into the left slot (slot 0), as shown below. Remove the protective label on the power supply after installing the processor.

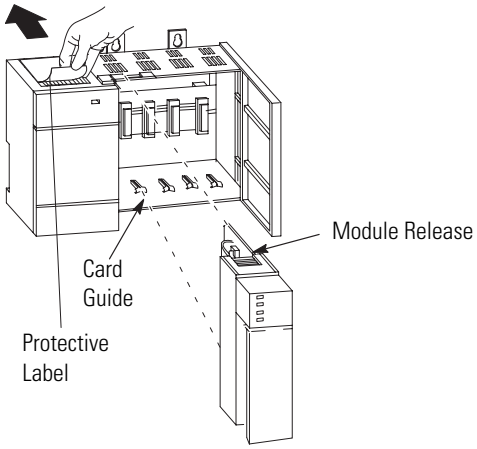

7.	Apply power to the processor.	Reference
	1. Energize the chassis power supply. 2. Check the chassis power supply and processor status indicators. The power status indicator on the power supply should be on and the fault status indicator on the processor should be flashing.	**Chapter 8 (Starting Up Your Control System)** **Chapter 10 (Troubleshooting)**

Power supply and SLC 5/01 and SLC 5/02 processor status indicators

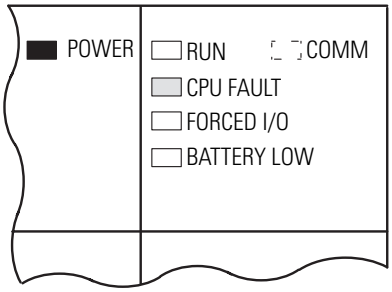

The RUN status indicator on the SLC 5/01 processor is actually labeled PC RUN. Also, the SLC 5/01 processor does not have a COMM status indicator.

Power supply and SLC 5/03 and SLC 5/04 processor status indicators

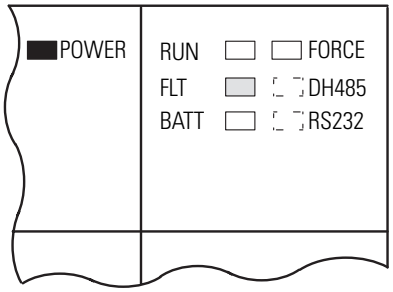

The DH485 status indicator on the SLC 5/03 processor is labeled DH+ on the SLC 5/04 processor.

Power supply and SLC 5/05 processor status indicators

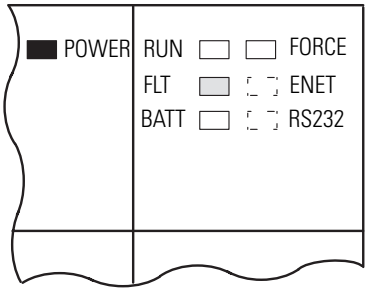

Refer to the following key to determine the status of the status indicators:

- Indicates the status indicator is off.
- Indicates the status indicator is on.
- Indicates the status indicator is FLASHING.
- Status of status indicator does not matter.

8.	Load your software.	Reference
	Refer to your software package's documentation.	—

9.	Establish communication to the processor.	Reference
Refer to the following to establish communication between the processor and your personal computer.		**Chapter 8 (Starting Up Your Control System)**

Processor	Procedure
SLC 5/01	Connect 1747-PIC interface from the processor to your personal computer serial port or connect 1747-UIC interface from the processor to your personal computer USB port, or use a 1784-PKTX(D) or 1784-PMCK interface.
SLC 5/02	Connect 1747-PIC interface from the processor to your personal computer serial port or connect 1747-UIC interface from the processor to your personal computer USB port, or use a 1784-PKTX(D) or 1784-PMCK interface.
SLC 5/03	Connect the 1747-PIC interface from the processor to your personal computer serial port or connect the 1747-UIC interface from the processor to your personal computer USB port to the processor by using the 1747-C13 or 1747-CP3 cable. You can also use a 1784-PKTX(D) or 1784-PCMK interface, or a 1747-CP3 cable from channel 0 of the processor to the personal computer serial port.
SLC 5/04	Connect a 1747-CP3 cable from channel 0 of the processor to the personal computer serial port or connect the 1747-UIC interface from channel 0 of the processor to your personal computer USB port, or use a 1784-PKTX(D) or 1784-PCMK interface.
SLC 5/05	Connect a 1747-CP3 cable from channel 0 of the processor to the personal computer serial port, or connect the 1747-UIC interface converter from channel 0 of the processor to your personal computer USB port. For Ethernet connection, connect channel 1 of the processor and the PC Ethernet card to an Ethernet hub by using 10/100Base-T compatible cable.[1]

[1] EtherNet/IP address must first be set via BOOTP or an RS-232 connection. See appendix C for more information.

Set the communication parameters of software to match the default parameters of the processor.

Comms Channel	Channel 0 Configuration	Channel 1 Configuration		
SLC 5/01 and 5/02	**SLC 5/03, 5/04, and 5/05**	**SLC 5/03**	**SLC 5/04**	**SLC 5/05**
DH-485: • 19.2 Kbaud • node address = 1	DF1 Full-duplex: • no handshaking • 19.2 Kbaud • CRC Error Check • duplicate packet, detect on • no parity	DH-485: • 19.2 Kbaud • node address = 1	DH+: • 57.6 Kbaud • node address = 1	Ethernet: BOOTP enabled

10.	(Optional) Return the SLC 5/03, SLC 5/04, or SLC 5/05 processor to initial factory conditions.	Reference
Use this procedure if the communication channels are shut down due to configuration parameters, or if you absolutely cannot establish communication with the processor.		**Chapter 10 (Troubleshooting)**

ATTENTION

If you return the processor to the initial factory conditions, the communication configurations are returned to their default settings and the user program is cleared.

1. Remove power from the SLC 500 power supply.
2. Remove the processor from the chassis.
3. Disconnect the battery by removing the battery connector from its socket.
4. Locate the VBB and GND connections on the right side of the motherboard.
5. Place a small bladed screwdriver across the VBB and GND connections and hold for 60 seconds. This returns the processor to the initial factory conditions.

SLC 5/03 Processors (1747-L531, 1747-L532, and 1747-L533)

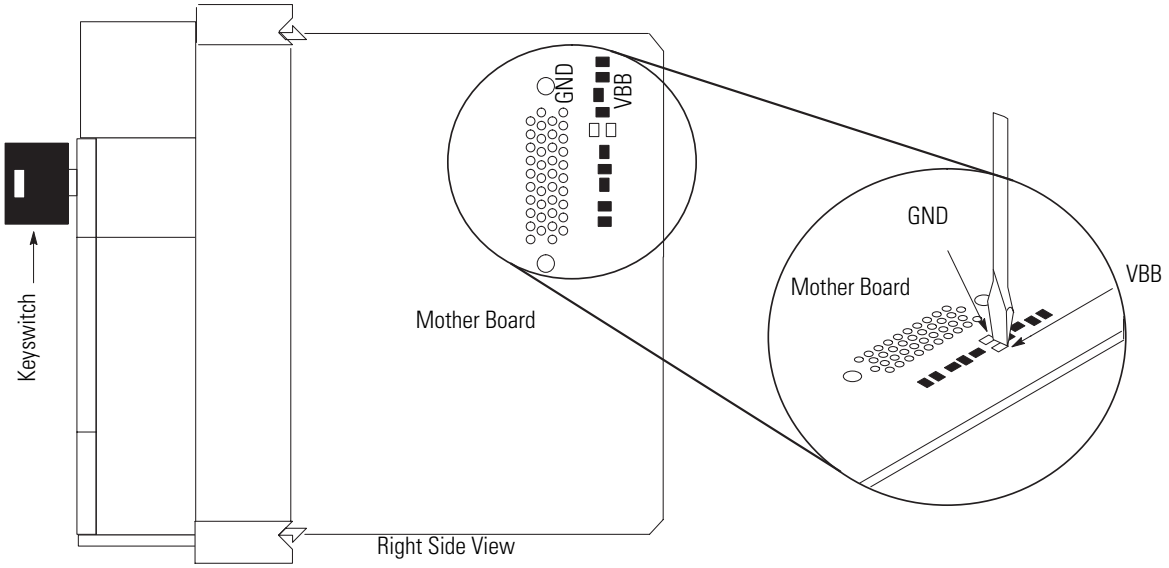

SLC 5/04 Processors (1747-L541, 1747-L542, and 1747-L543)
SLC 5/05 Processors (1747-L551, 1747-L552, and 1747-L553)

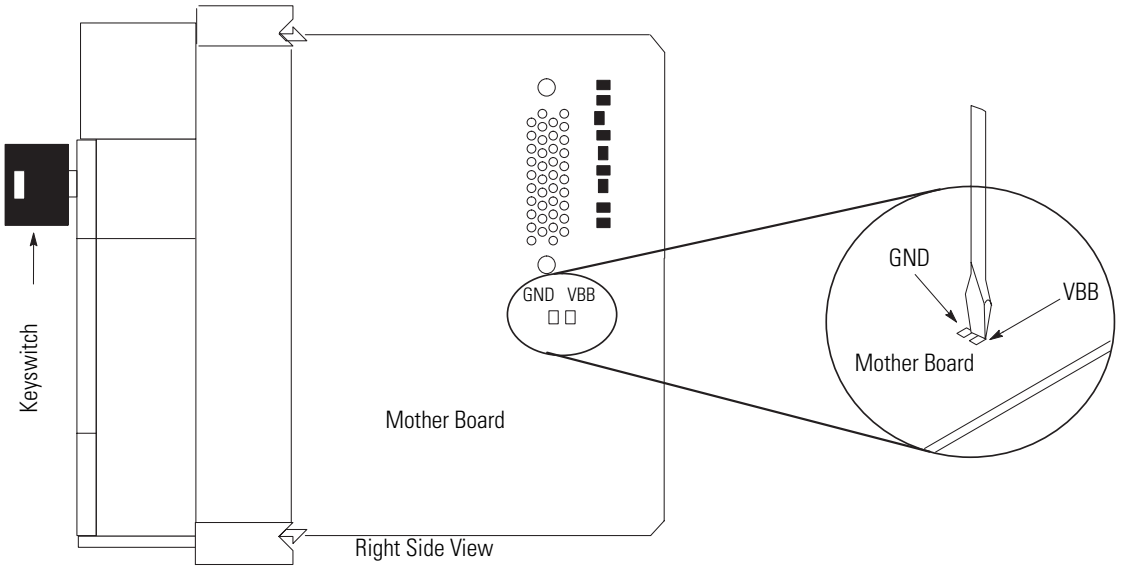

Notes:

Selecting Your Hardware Components

This chapter provides general information on what your SLC 500 controller can do, an overview of the modular control system, and special considerations for controller installations. It also explains how to select:

- chassis.
- modular processors.
- discrete I/O modules.
- specialty I/O modules.
- power supplies.
- enclosures.
- operator interfaces.
- memory modules.
- isolation transformers.

This chapter does not provide you with all the information that you need to select a complete SLC 500 control system. To do this, we recommend that you use the latest version of the system overview, SLC 500 Programmable Controllers and I/O Modules, publication 1747-SG001.

European Union Directive Compliance

If this product has the CE mark it is approved for installation within the European Union and EEA regions. It has been designed and tested to meet the following directives.

EMC Directive

This product is tested to meet Council Directive 89/336/EEC Electromagnetic Compatibility (EMC) and the following standards, in whole or in part, documented in a technical construction file:

- EN 50081-2
  EMC - Generic Emission Standard, Part 2 - Industrial Environment
- EN 50082-2
  EMC - Generic Immunity Standard, Part 2 - Industrial Environment

This product is intended for use in an industrial environment.

Low Voltage Directive

This product is tested to meet Council Directive 73/23/EEC Low Voltage, by applying the safety requirements of EN 61131-2 Programmable Controllers, Part 2 – Equipment Requirements and Tests.

For specific information required by EN61131-2, see the appropriate sections in this publication, as well as the Industrial Automation Wiring and Grounding Guidelines for Noise Immunity, publication 1770-4.1.

Overview of Your Modular Control System

The basic modular controller consists of a chassis, power supply, processor (CPU), Input/Output (I/O modules), and an operator interface device for programming and monitoring. The figure below shows typical hardware components for a modular controller.

Modular Hardware Components

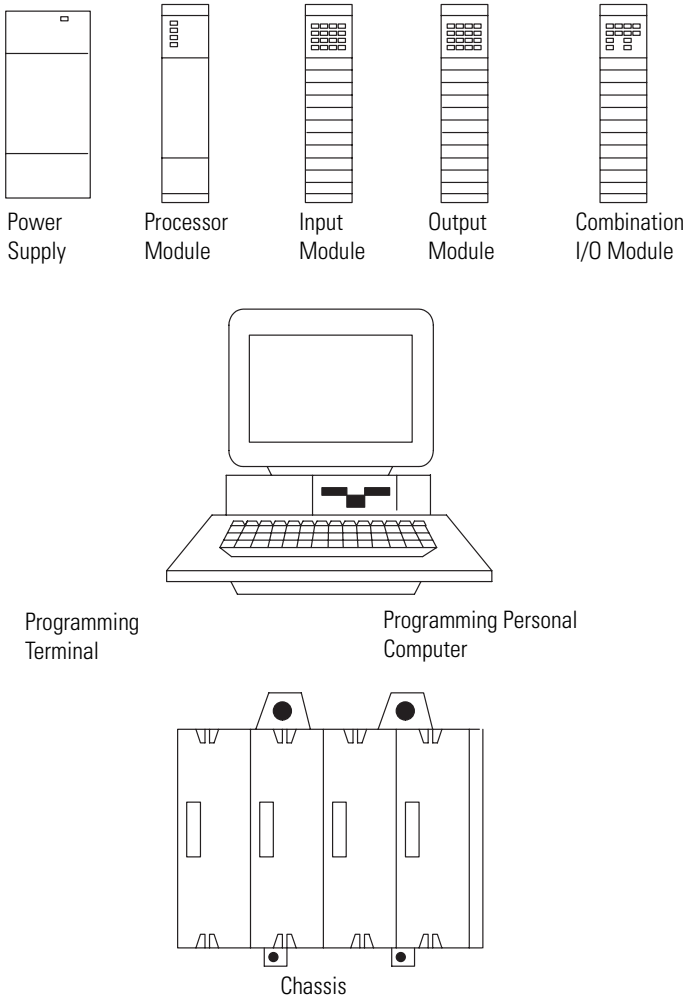

Modular Controller

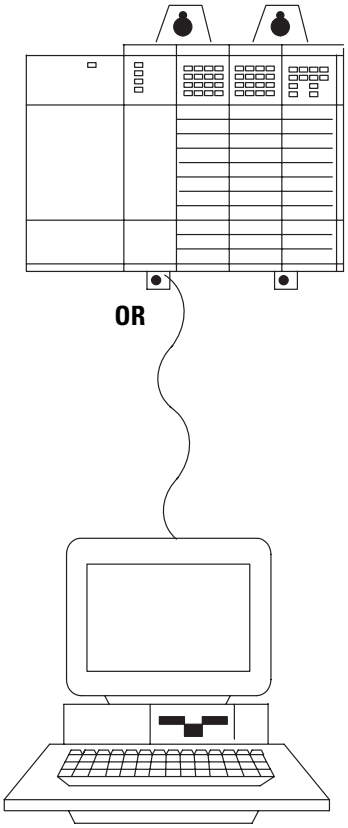

Principles of Machine Control

You enter a ladder logic program into the controller by using the software. The logic program is based on your electrical relay print diagrams. It contains instructions that direct control of your application.

With the ladder logic program entered into the controller, placing the controller in the Run mode initiates an operating cycle. The controller's operating cycle consists of a series of operations performed sequentially and repeatedly, unless altered by your ladder logic program.

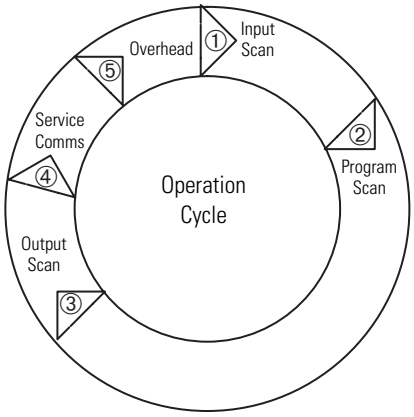

1. Input scan - The time required for the controller to scan and read all input data; typically accomplished within a few milliseconds.

2. Program scan - The time required for the processor to execute the instruction in the program. The program scan time varies depending on the instruction used and each instruction's status during the scan time.

IMPORTANT Subroutine and interrupt instructions within your logic program may cause deviations in the way the operating cycle is sequenced.

3. Output scan - The time required for the controller to scan and write all output data; typically accomplished within a few milliseconds.

4. Service communication - The part of the operating cycle in which communication takes place with other devices, such as an HHT or a personal computer.

5. Housekeeping and overhead - The time spent on memory.

Selecting Modular Processors

SLC 500 modular processors are designed to meet a wide range of applications, from small stand-alone to large distributed systems and from simple to complex applications.

Processor Features

Memory size - The SLC 500 modular processors memory is user configurable for either data storage or program storage. Memory size is 1 K...64 K.

I/O points - The SLC 5/01 processor supports addressing of up to 3940 I/O. The SLC 5/02, SLC 5/03, SLC 5/04, and SLC 5/05 processors support addressing of 4096 I/O. The SLC 500 modular processors are supported by over 60 different I/O modules including digital, analog, and intelligent I/O.

Performance - The SLC 500 modular processors are designed with throughput performance in mind. The program scan time for a typical instruction mix are 0.9 ms/K...8.0 ms/K depending on the processor. I/O scan times are 0.25 ms...2.6 ms depending on the processor and I/O installed in the system.

Advanced instruction support - The instructions available depends on the processor used. The following table lists the instructions supported by the SLC 500 modular processors.

Instruction Support	SLC 5/01	SLC 5/02	SLC 5/03	SLC 5/04	SLC 5/05
Bit	•	•	•	•	•
Timer and Controller	•	•	•	•	•
Comparison	•	•	•	•	•
Basic Math	•	•	•	•	•
Move, Copy, and Bit Shift	•	•	•	•	•
Sequencer	•	•	•	•	•
Jump and Subroutine	•	•	•	•	•
Messaging		•	•	•	•
STI		•	•	•	•
FIFO/LIFO		•	•	•	•
PID		•	•	•	•
Advanced Math and Trig			•	•	•

Instruction Support	SLC 5/01	SLC 5/02	SLC 5/03	SLC 5/04	SLC 5/05
Indirect Addressing			•	•	•
Floating Point Math			•	•	•
ASCII			•	•	•

Processor Communication Options

The SLC 500 processors support several communication options. The following sections describe the available physical connections and protocol options used by the SLC 500 processors.

Physical Connection Options

Ethernet (10/100Base-T) channel offers:

- 10/100 Mbps communication rate.
- ISO/IEC 8802-3STD 802.3 (RJ45) connector for 10/100Base-T media.
- TCP/IP communication protocol.
- built-in isolation.

Data Highway Plus (DH+) channel offers:

- communication rates of 57.6 Kbaud, 115.2 Kbaud, and 230.4 Kbaud.
- maximum network length of 3048 m (10,000 ft) at 57.6 Kbaud
- Belden 9463 (blue hose) cable connection between nodes (daisy chain connection).
- built-in isolation.

DH-485 channel offers:

- configurable isolation via the 1747-AIC or 1761-NET-AIC interfaces.
- maximum network length of 1219 m (4000 ft).
- RS-485 electrical specifications.
- Belden 9842 or Belden 3106A cable connection between nodes (daisy-chain connection).

RS-232 channel offers:

- communication rates up to 19.2 Kbaud (38.4 Kbaud SLC 5/04 and SLC 5/05 processors).
- maximum distance between devices is 15.24 m (50 ft).

- RS-232C (EIA-232) electrical specifications.
- modem support.
- built-in isolation.

Processor Channel Connections

Processor		Physical Communication Channel			
		DH-485	RS-232	DH+	Ethernet
SLC 5/01 and SLC 5/02		DH-485 protocol	—	—	—
SLC 5/03	channel 0	—	DH-485[1], DF1 full-duplex, DF1 half-duplex master/slave, ASCII, DF1 radio modem, and Modbus RTU Master protocols	—	—
	channel 1	DH-485 protocol	—	—	—
SLC 5/04	channel 0	—	DH-485[1], DF1 full-duplex, DF1 half-duplex master/slave, ASCII, DF1 radio modem, and Modbus RTU Master protocols	—	—
	channel 1	—	—	DH+ protocol	—
SLC 5/05	channel 0	—	DH-485[1], DF1 full-duplex, DF1 half-duplex master/slave, ASCII, DF1 radio modem, and Modbus RTU Master protocols	—	—
	channel 1	—	—	—	EtherNet TCP/IP protocol

(1) An 1761-NET-AIC interface is required when connecting to a DH-485 network.

Protocol Options

EtherNet TCP/IP Protocol - Standard Ethernet, utilizing the TCP/IP protocol, is used as the backbone network in many office and industrial buildings. Ethernet is a local area network that provides communication between various devices at 10/100 Mbps. This network provides the same capabilities as DH+ or DH-485 networks, plus:

- SNMP support for Ethernet network management.
- optional dynamic configuration of IP addresses by using a BOOTP/DHCP utility.
- SLC 5/05 Ethernet data rate up to 40 times faster than SLC 5/04 DH+ messaging.
- ability to message entire SLC 5/05 data files.
- much greater number of nodes on a single network possible compared to DH-485 (32) and DH+ (64).

Data Highway Plus (DH+) Protocol - The Data Highway Plus protocol is used by the PLC-5 family of processors and the SLC 5/04 processor. This protocol is similar to DH-485, except that it can support up to 64 devices (nodes) and runs at faster communication (baud) rates.

DH-485 Protocol - The SLC 500 processors have a DH-485 channel that supports the DH-485 communication network. This network is a multi-master, token-passing network protocol capable of supporting up to 32 devices (nodes). This protocol allows:

- monitoring data and processor status, along with program uploading and downloading of any device on the network from one location.
- SLC processors to pass data to each other (peer-to-peer communication).
- operator interface devices on the network to access data from any SLC processor on the network.

DF1 full-duplex protocol - DF1 full-duplex protocol (also referred to as DF1 point-to-point protocol) lets two devices communicate with each other at the same time. This protocol allows:

- transmission of information across modems (dial-up, leased line, radio, or direct cable connections).
- communication to occur between Allen-Bradley products and third-party products.

DF1 half-duplex protocol (master and slave) - DF1 half-duplex protocol provides a multi-drop single master/multiple slave network capable of supporting up to 255 devices (nodes). This protocol also provides modem support and is ideal for SCADA (Supervisory Control and Data Acquisition) applications because of the network capability.

ASCII protocol - The ASCII protocol provides connection to other ASCII devices, such as bar code readers, weigh scales, serial printers, and other intelligent devices.

DF1 radio modem protocol - The DF1 radio modem protocol, optimized for use with radio modem networks, is a hybrid between DF1 full-duplex protocol and DF1 half-duplex protocol. DF1 radio modem:

- supports Store and Forward capability.
- uses a node address (0...254) on channel 0.

Modbus RTU (Remote Terminal Unit) transmission mode Master protocol - The Modbus RTU Master protocol provides communication between Modbus RTU devices through a multi-drop single-master/multiple-slaves network. This protocol is capable of supporting up to 247 slave devices (nodes).

SLC Communication Options

Communication Protocol	Processor				
	SLC 5/01	SLC 5/02	SLC 5/03	SLC 5/04	SLC 5/05
DH-485 peer-to-peer	receive only	receive and initiate	receive and initiate	—	—
DH-485 via RS232 port	—	—	receive and initiate[9]	receive and initiate[9]	receive and initiate[9]
DF1 via RS232 port (full-duplex or half-duplex master or slave)	receive only[1]	receive only[1]	receive and initiate	receive and initiate	receive and initiate
ASCII via RS232 port	—	—	receive and initiate	receive and initiate	receive and initiate
Data Highway Plus (DH+)	receive only[2]	receive only[2]	receive and initiate[5]	receive and initiate	receive and initiate[5]
Ethernet	—	—	receive and initiate[6]	receive and initiate[6]	receive and initiate
DeviceNet	—	receive and initiate[3]	receive and initiate[3][7]	receive and initiate[3][7]	receive and initiate[3][7]
ControlNet	—	receive and initiate[4]	receive and initiate[4][8]	receive and initiate[4][8]	receive and initiate[4][8]
Modbus RTU Master	—	—	initiate only	initiate only	initiate only

(1) A 1747-KE or 1770-KF3 interface is required to bridge from DF1 (full-duplex or half-duplex slave only) to DH485 network.

(2) A ControlLogix gateway with a 1746-DHRIO interface and a 1756-DH485 interface is required to bridge from DH+ to DH-485 network.

(3) A 1747-SDN module is required for scanning I/O and for explicit messaging on DeviceNet network.

(4) A 1747-SCNR module is required for scanning I/O and for explicit messaging on ControlNet network.

(5) The SLC 5/04's channel-to-channel passthru feature may be used to bridge between DH+ and DH-485 network or between DH+ and DF1 full-duplex network (DH+ to DF1 full-duplex passthru available starting with OS401). Another option is to use the 1785-KE interface to bridge between DH+ and DF1 full-duplex or DH+ and DF1 half-duplex master/slave network.

(6) A 1761-NET-ENI interface is required to bridge from DF1 full-duplex to Ethernet network.

(7) A 1761-NET-DNI interface is required to bridge from DF1 to DeviceNet network.

(8) A 1747-KFC15 module or 1770-KFC15 interface is required to bridge from DF1 to ControlNet network.

(9) If using 1747-AIC interface for isolation, connect to DH-485 network using 1747-PIC interface. If using a 1761-NET-AIC interface for isolation, connect directly to DH-485 network with 1747-CP3 serial cable (or equivalent RS-232 null-modem cable).

TIP The 1785-KE module requires the use of a 1771 series chassis and power supply.

Selecting Discrete I/O Modules

There are three types of discrete I/O modules: input, output, and combination. They are available in a wide variety of densities including 4, 8, 16, and 32 point and can interface to ac, dc, and TTL voltage levels. Output modules are available with solid-state ac, solid-state dc, and relay contact type outputs.

For a complete listing of discrete I/O modules and specifications, contact your Allen-Bradley sales office for the latest selection guide, publication 1747-SG001.

Selecting Specialty I/O Modules

The SLC 500 family offers specialty I/O modules that enhance your control system. Modules range in function from analog interface to motion control, from communication to high-speed counting.

For a complete listing of specialty I/O modules and their specifications, contact your Allen-Bradley sales office for the latest selection guide, 1747-SG001.

Selecting Power Supplies

To select a power supply, you need:

- power supply specifications.
- power supply worksheet, one for each chassis.
- SLC 500 Systems Selection Guide, publication 1747-SG001.

When configuring a modular system, you must have a power supply for each chassis. Careful system configuration will result in the best performance. Excessive loading of the power supply outputs can cause a power supply shutdown or premature failure.

There are three different ac power supplies and four dc power supplies. For ac power supplies, the 120/240V selection is made by a jumper. Place the jumper to match the input voltage.

ATTENTION

Ensure that the power supply jumper is in the correct position before supplying power to the SLC 500 system or personal injury or damage to the system may result.

SLC power supplies have an status indicator that illuminates when the power supply is functioning properly.

1746-P7 Current Capacity

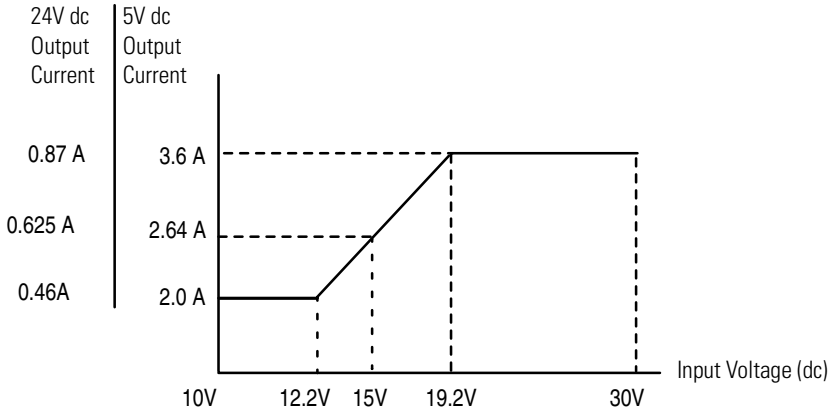

Example for Selecting Power Supplies

Select a power supply for chassis 1 and chassis 2 in the control system below.

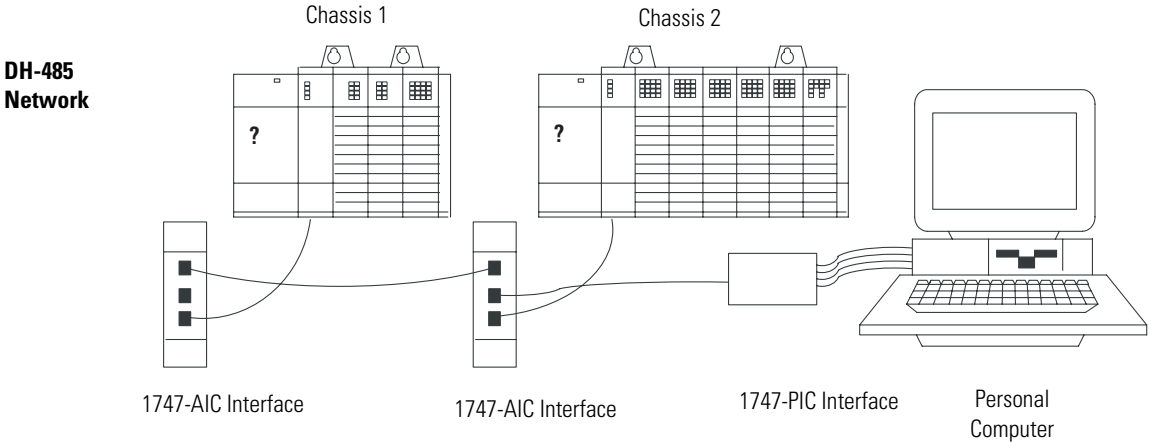

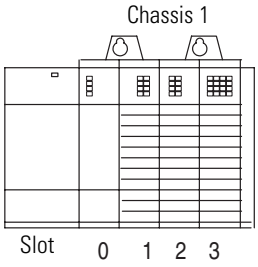

Slot Numbers	Description	Cat. No.	Power Supply at 5V dc (Amps)	Power Supply at 24V dc (Amps)
0	Processor unit	1747-L511	0.090	0.000
1	Input module	1747-IV8	0.050	0.000
2	Transistor output module	1746-OB8	0.135	0.000
3	Triac output module	1746-OA16	0.370	0.000
Peripheral device	Isolated link coupler	1747-AIC	0.000	0.085
Total Current:			0.645	0.085[1]

(1) The 1746-P1 power supply is sufficient for Chassis #1. The internal current capacity for this power supply is 2 A at 5V dc, 0.46 A at 24V dc.

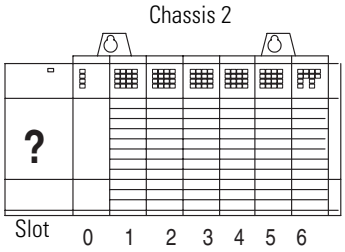

Slot Numbers	Description	Cat. No.	Power Supply at 5V dc (Amps)	Power Supply at 24V dc (Amps)
0	Processor unit	1747-L514	0.090	0.000
1	Output module	1746-OW16	0.170	0.180
2	Combination module	1746-IO12	0.090	0.070
3, 4, 5, 6	Analog output modules	1746-NO4I	0.220 (4 x 0.055)	0.780 (4 x 0.195)
Peripheral device	Isolated link coupler	1747-AIC	0.000	0.085
Peripheral device	Interface converter	1746-PIC	Not applicable	Not applicable
Total Current:			0.570	1.115[1]

(1) The 1746-P4 power supply is sufficient for Chassis #2. The internal current capacity for this power supply is 10 A at 5V dc, 2.88 A at 24V dc; not to exceed 70 W.

Example Worksheet for Selecting a 1746 Power Supply

If you have a multiple chassis system, make copies of the Power Supply Worksheet found on page 230.

For a detailed list of device load currents, refer to the SLC 500 Modular Chassis and Power Supplies Technical Data, publication 1746-TD003.

TIP Consider future system expansion when selecting a power supply.

Procedure

1. For each slot of the chassis that contains a module, list the slot number, the catalog number of the module, and its 5V and 24V maximum currents. Also include the power consumption of any peripheral devices that may be connected to the processor other than a DTAM or PIC device—the power consumption of these devices is accounted for in the power consumption of the processor.

Chassis Number		***1***	**Maximum Currents**		**Chassis Number**		**2**	**Maximum Currents**	
Slot Number		**Cat. No.**	**at 5V dc**	**at 24V dc**	**Slot Number**		**Cat. No.**	**at 5V dc**	**at 24V dc**
Slot	*0*	*1747-L511*	*0.090 A*	*0.000 A*	Slot	*0*	*1747-L514*	*0.090 A*	*0.000 A*
Slot	*1*	*1746-IV8*	*0.050 A*	*-*	Slot	*1*	*1746-OW16*	*0.170 A*	*0.180 A*
Slot	*2*	*1746-OB8*	*0.135 A*	*-*	Slot	*2*	*1746-NO4I*	*0.055 A*	*0.195 A*
Slot	*3*	*1746-OA16*	*0.370 A*	*-*	Slot	*3*	*1746-NO4I*	*0.055 A*	*0.195 A*
Slot					Slot	*4*	*1746-NO4I*	*0.055 A*	*0.195 A*
Slot					Slot	*5*	*1746-NO4I*	*0.055 A*	*0.195 A*
Slot					Slot	*6*	*1746-IO12*	*0.090 A*	*0.070 A*
Slot					Slot				
Peripheral Device		*1747-AIC*	*-*	*0.085 A*	Peripheral Device		*1747-AIC*	*-*	*0.085 A*
Peripheral Device					Peripheral Device				
2.Add the loading currents of all the system devices at 5 and 24V dc to determine the **Total Current**.			***0.645 A***	***0.085 A***	2.Add the loading currents of all the system devices at 5 and 24V dc to determine the **Total Current**.			***0.570 A***	***1.115 A***

3.For 1746-P4 power supplies, calculate the total power consumption of all system devices. If you are not using a 1746-P4 power supply, go to step 4.

Current		**Multiply by**	**= Watts**	**Current**		**Multiply by**	**= Watts**
Total Current at 5V dc	*0.645 A*	5V	*3.225 W*	Total Current at 5V dc	*0.570 A*	5V	*2.850 W*
Total Current at 24V dc	*0.085 A*	24V	*2.040 W*	Total Current at 24V dc	*1.115 A*	24V	*26.76 W*
User Current at 24V dc	*0.500 A*	24V	*12.00 W*	User Current at 24V dc	*0.500 A*	24V	*12.00 W*
Add the Watts values to determine Total Power (cannot exceed 70 Watts)			***17.26 W***	**Add the Watts values to determine Total Power (cannot exceed 70 Watts)**			***41.61 W***

4.Choose the power supply from the list of catalog numbers shown below. Compare the Total Current required for the chassis with the Internal Current capacity of the power supplies. Be sure that the Total Current consumption for the chassis is less than the Internal Current Capacity for the power supply, for both 5V and 24V loads.

Cat. No.		**Internal Current Capacity**		**Cat. No.**		**Internal Current Capacity**	
		at 5V dc	**at 24V dc**			**at 5V dc**	**at 24V dc**
1746-P1		2.0 A	0.46 A	**1746-P1**		2.0 A	0.46 A
1746-P2		5.0 A	0.96 A	**1746-P2**		5.0 A	0.96 A
1746-P3		3.6 A	0.87 A	**1746-P3**		3.6 A	0.87 A
1746-P4 (see step 3)		10.0 A	2.88 A	**1746-P4 (see step 3)**		10.0 A	2.88 A
1746-P5		5.0 A	0.96 A	**1746-P5**		5.0 A	0.96 A
1746-P6		5.0 A	0.96 A	**1746-P6**		5.0 A	0.96 A
1746-P7[1]	12V dc input	2.0 A	0.46 A	**1746-P7**[1]	12V dc input	2.0 A	0.46 A
	24V dc input	3.6 A	0.87 A		24V dc input	3.6 A	0.87 A
Required Power Supply		***1746-P1***		**Required Power Supply**		***1746-P4***	

(1) See 1746-P7 current capacity graph on page 37.

Selecting Enclosures

The enclosure protects the equipment from atmospheric contamination. Standards established by the National Electrical Manufacturer's Association (NEMA) define enclosure types, based on the degree of protection an enclosure will provide. Use a fan to circulate the air of sealed enclosures that use convection cooling to dissipate heat. Select a NEMA-rated enclosure that suits your application and environment. The enclosure should be equipped with a disconnect device. To calculate the heat dissipation of your controller, see appendix H.

Selecting Operator Interfaces

Use an operator interface to program and/or monitor your SLC 500 controller. You can choose from several Allen-Bradley operator interface devices.

Programming with a Personal Computer

Contact Rockwell Software or your local Allen-Bradley distributor for specifications and availability of software packages available to program the SLC 500 Modular Controllers.

AIC+ Advanced Interface Converter (1761-NET-AIC)

The AIC+ advanced interface converter provides communication links between various networked devices. It has three communication ports: one for DH-485 and two for RS-232. The AIC+ converter is compatible with a variety of SLC and MicroLogix controllers and peripherals.

1747-PIC RS-232/DH485 Interface Converter

For communication with a SLC 5/01, SLC 5/02, or SLC 5/03 processor, you can use an RS-232/DH-485 interface convertor (catalog number 1747-PIC) between the computer and SLC controller. The converter includes a 279.4 mm (11 in.) ribbon cable, already attached to the converter, for connection to the computer serial port and a catalog number 1746-C10 cable for connection to the controller.

If you are using an SLC 5/03, SLC 5/04, or SLC 5/05 processor, you do not need the 1747-PIC interface. You can program via the RS-232 channel using DF1 full-duplex protocol or DH485 protocol and RS-232 program cable (catalog number 1747-CP3).

1747-UIC USB to DH485 Interface Converter

For communication with an SLC 5/01 through SLC 5/05 processor, you can connect the 1747-UIC interface between the computer's USB port and the SLC controller. The 1747-UIC interface features an RS-232 port for communication with SLC 5/03 and later processors and an RS-485 port for communication with SLC 5/03 and previous processors.

Monitoring with a Data Table Access Module

The Data Table Access Module (DTAM) is a plant floor device that lets you access data file information, change operating modes, monitor and clear processor faults, and transfer the user program between RAM and an EEPROM memory module with any SLC 5/01, SLC 5/02, or SLC 5/03 (except for the 1747-L533 processor) processor. You cannot use it to create new programs. Important features of DTAM include:

- shorthand addressing, which provides easier access to data files.
- display prompts in six, user-selectable languages: English, French, German, Italian, Spanish, and Japanese.
- UL listed to US and Canadian Safety Standards.
- NEMA type 12 and 13 enclosures.
- point-to-point interface to an SLC family processor, or as a network device on a DH-485 network.

Monitoring with a PanelView or PanelView Plus Operator Terminal

The PanelView or PanelView Plus operator terminals provide operator interface capabilities in space-saving, flat-panel designs. Offering optimum viewing angles, these electronic operator interfaces feature pixel graphics and high-performance functionality in both color and monochrome displays. The PanelView operator terminals let you enter input by using function keys or a touch screen, depending upon the model.

All PanelView and PanelView Plus operator terminals are available with DF1 or DH-485 (RS-232) communication capability, letting them communicate directly with channel 0 on an SLC 5/03, SLC 5/04, or SLC 5/05 processor. The larger versions also offer DH-485 (RJ-45), DH+, Remote I/O, Ethernet, DeviceNet, and ControlNet network connectivity.

Selecting a Memory Module for the SLC 5/01 and SLC 5/02 Processors

You can plug these optional EEPROM (Electrically Erasable Programmable Read Only Memory) memory modules into the SLC 500 controller. With a memory module, you can:

- save the contents of the processor RAM for storage purposes.
- load the contents of the EEPROM memory into the processor RAM.

Adapter sockets (catalog number 1747-M5) are required when inserting EEPROMs or UVPROMs into the programming and erasing equipment.

To program a memory module, see your programming software user manual.

EEPROM Memory Modules

These optional memory modules provide a non-volatile memory back-up in a convenient modular form. The modules plug into a socket on the processor.

You can store (save) your program in the EEPROM by inserting it into the processor and programming software to download the program.

You can use an EEPROM module as a master, or you can use an archived processor file as the source by using the software PROM translator utility.

Adapter sockets are required when inserting memory modules into commercially available PROM programmer. The memory module fits into the adapter socket and then into a PROM programmer.

ATTENTION

Make sure the adapter is inserted properly into the programming equipment or damage could result.

Memory Module Compatibility

Cat. No.	Description	Use with this processor type		
		SLC 5/01		SLC 5/02
		1747-L511	1747-L514	1747-L524
1747-M1	1 K User Words EEPROM	X	X	X
1747-M2	4 K User Words EEPROM	X	X	X
1747-M5	Adapter Socket	X	X	X

Memory Backup for the 1747-L511, SLC 5/01 Processor

The curve below illustrates the ability of the memory back-up capacitor to maintain the contents of the RAM in a 1747-L511 processor. To back up the memory for a longer period of time, a lithium battery, catalog number 1747-BA, is required.

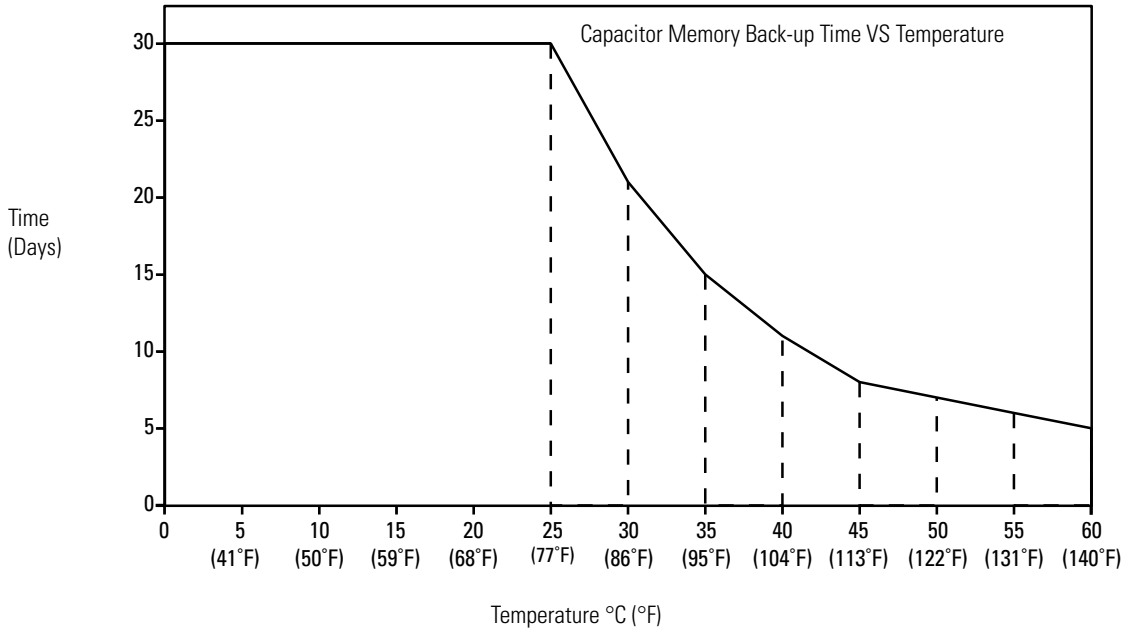

Selecting a Memory Module for SLC 5/03, SLC 5/04, and SLC 5/05 Processors

The memory module for the SLC 5/03, SLC 5/04, and SLC 5/05 processors is called Flash EPROM (Flash Erasable Programmable Read Only Memory). Flash EPROMs combine the programming versatility of EEPROMs with the security precautions of UVPROMs. This means that you have the option of leaving your EPROM programs write-protected or unprotected. Write-protect the EPROM by using either your software or a PROM programmer.

The memory modules consist of a Flash EPROM mounted on a circuit board with a connector and plastic housing.

Adapter sockets (catalog number 1747-M15) are required when inserting memory modules into commercially available PROM

programmer. The 1747-M15 Series B adapter socket **is required** for use with the memory module (catalog number 1747-M13).

ATTENTION

Make sure the adapter is inserted properly in the programming equipment or damage could result.

See the table below for details on the Flash EPROM and adapter socket.

Memory Module Compatibility

Cat. No.	Description	Use with this processor type		
		SLC 5/03	SLC 5/04	SLC 5/05
		1747-L531, 1747-L532, 1747-L533	1747-L541, 1747-L542, 1747-L543	1747-L551, 1747-L552, 1747-L553
1747-M13	Supports up to 64 K of user-memory backup	X (Series C OS302 or later)	X (Series C OS401 or later)	X (Series C OS501 or later)

To program a memory module, refer to your programming software user manual or help resource. Follow this procedure to program a memory module.

1. Set the memory module configuration bits (S:1/10 to S:1/12) in your offline program file. Refer to SLC 500 Instruction Set Reference Manual, publication 1747-RM001, for details on the Memory Module Configuration Bits.
2. Download your program file to your processor.
3. Go online with the processor and burn the program to the EEPROM memory module (per the instructions outlined in your programming software user manual or help resource).

EEPROM Burning Options

You can burn a program into an EEPROM memory module using a processor that is the same or different from the one used to run the program. When burning EEPROMs, keep the following conditions in mind:

- The processor burning the EEPROM must be of the same type and have the same OS version or lower than the target processor.

- The program size cannot exceed the processor memory size. For instance, an SLC 5/01 4 K processor can burn an EEPROM for a SLC 5/01 1 K processor as long as the program does not exceed 1 K.
- The I/O and chassis configuration of the burning processor does not have to match the I/O configuration of the program being burned.
- You do not have to enter the Run mode before burning an EEPROM. If the run mode is entered and the chassis configuration does not match, a major fault will occur. If you burn an EEPROM while in the fault mode, the fault will also be saved in the EEPROM.

The following table summarizes the above conditions as to the type of processor you can use to burn EEPROMs for other processors.

EEPROM Burning Options

To burn EEPROMs for these processors												
Use these processors	**SLC 5/01 (1K)**	**SLC 5/01 (4K)**	**SLC 5/02 (4K)**	**SLC 5/03 (8K)**	**SLC 5/03 (16K)**	**SLC 5/03 (32K)**	**SLC 5/04 (16K)**	**SLC 5/04 (32K)**	**SLC 5/04 (64K)**	**SLC 5/05 (16K)**	**SLC 5/05 (32K)**	**SLC 5/05 (64K)**
SLC 5/01 (1K)	•	1 K max										
SLC 5/01 (4K)	1 K max	•										
SLC 5/02 (4K)			•									
SLC 5/03 (8K)				•	8 K max	8 K max						
SLC 5/03 (16K)				8 K max	•	16 K max						
SLC 5/03 (32K)				8 K max	16 K max	•						
SLC 5/04 (16K)							•	16 K max	16 K max			
SLC 5/04 (32K)							16 K max	•	32 K max			
SLC 5/04 (64K)							16 K max	32 K max	•			
SLC 5/05 (16K)										•	16 K max	16 K max
SLC 5/05 (32K)										16 K max	•	32 K max
SLC 5/05 (64K)										16 K max	32 K max	•

• valid combination

Selecting Isolation Transformers

If there is high frequency conducted noise in or around your distribution equipment, use an isolation transformer in the ac line to the power supply. This type of transformer provides isolation from your power distribution system and is often used as a step down transformer to reduce line voltage. Any transformer used with the controller must have a sufficient power rating for its load. This power rating is generally expressed in voltamperes (VA).

To select an appropriate isolation transformer, calculate the power required by the chassis power supply (or supplies if more than one chassis in system) and any input circuits and output loads that are connected through this transformer.

You can find the power requirement (VA rating) for the chassis power supplies in the specifications starting on page 177. The power requirement for the input circuits is determined by the number of inputs, the operating voltage, and the nominal input current. The power requirement for output loads is determined by the number of outputs, the load voltage, and load current.

For example, if you have a 1746-P1 power supply, a 16-point ac input module, catalog number 1746-IA16, (12 mA at 120V ac) and a 16-point ac triac output module, catalog number 1746-OA16, (0.5A at 120V ac), the power consumed would be:

$$135VA + (16)(120V)(0.012\ A) + (16)(120V)(0.5\ A) = 1118VA$$

IMPORTANT In this case, 0.5 A is the maximum rating of the triac output at 30 °C (86 °F). If the load draws less than 0.5 A, this figure may be reduced accordingly. The output portion of the VA calculation should reflect the current requirements of selected loads.

In general, we recommend that the transformer is oversized to provide some margin for line voltage variations and other factors. Typically a transformer that is 25% larger than the calculated VA is sufficient.

Most industrial environments are susceptible to power transients or spikes. To help insure fault-free operation and protection of equipment, use suppression devices on power line to the equipment in addition to the isolation equipment.

Special Considerations

The recommendations given previously provide favorable operating conditions for most controller installations. Some applications may involve adverse conditions, such as excessive line voltage variations and/of excessive noise, as described below. Additional measures can be taken to minimize the effect of these conditions.

Class I, Division 2 Applications

IMPORTANT When installing peripheral devices (for example, push buttons, lamps) into a hazardous environment, ensure that they are Class I, Division 2 certified, or determined to be safe for the environment.

Excessive Line Voltage Variations

The best solution for excessive line voltage variation is to correct any feeder problems in your distribution system. Where this does not solve the line variation problem, or in certain critical applications, use a constant voltage transformer. If you require a constant voltage transformer, connect it to the power supply **and** all input devices connected to the SLC 500 controller.

Connect output devices on the same power line, but their connection along the power line is normally made before the constant voltage transformer. A constant voltage transformer must have a sufficient power rating for its load.

Excessive Noise

When operating the SLC 500 controller in an environment with a high amount of electrical noise, give special consideration to the possibility of electrical interference.

The following reduces the effect of electrical interference.

- SLC 500 controller design features
- Proper mounting of controller within an enclosure
- Proper equipment grounding
- Proper routing of wires (power, communication, control lines)
- Proper suppression added to noise generating devices

Potential sources of noise include inductive loads, such as relays, solenoids, and motor starters when operated by hard contacts like push buttons or selector switches. Suppression may be necessary

when such loads are connected as output devices or when connected to the same supply line that powers the controller.

Lack of surge suppression on inductive loads may contribute to processor faults and sporadic operation. RAM can be corrupted (lost) and I/O modules may appear to be faulty or reset themselves.

For extremely noisy environments, use a memory module and program it for auto-loading on processor fault or power cycle for quick recovery.

Selecting Surge Suppressors

Most output modules have built-in surge suppression to reduce the effects of high voltage transients. However, you should use an additional suppression device if an output module is being used to control an inductive device such as:

- relays.
- motor starters.
- solenoids.
- motors.

Additional suppression is especially important if your inductive device is in series with or parallel to a hard contact such as:

- push buttons.
- selector switches.

By adding a suppression device directly across the coil of an inductive device, you reduce the effects of voltage transients caused by interrupting the current to that inductive device and prolong the life of the switch contacts. You also prevent electrical noise from radiating into system wiring. The diagram below shows an output module with a suppression device.

Surge Suppression Diagram

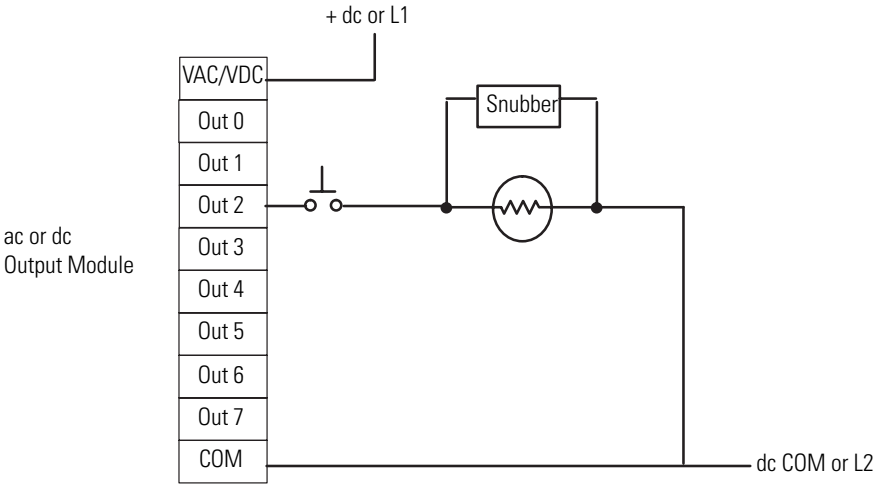

If you connect an SLC 500 controller triac output to control an inductive load, use varistors to suppress noise. Choose a varistor that is appropriate for the application. We recommend the following surge suppressors for triac outputs when switching 120V ac inductive loads:

- Harris MOV, part number V220 MA2A
- Allen-Bradley MOV, catalog number 599-K04 or 599-KA04, Series C or later.

Consult the varistor manufacturer's data sheet when selecting a varistor for your application.

ATTENTION

Damage could occur to SLC 500 triac outputs if you use suppressors having RC networks and the triac load current is 15 mA or less.

Allen-Bradley surge suppressors recommended for use with Allen-Bradley relays, contactors, and starters are shown in the table below.

Devices Requiring Surge Suppression

Device	Coil Voltage	Suppressor Cat. No.
Bulletin 509 Motor Starter Bulletin 509 Motor Starter	120V ac 240V ac	599-K04 (1) 599-KA04(1)
Bulletin 100 Contactor Bulletin 100 Contactor	120V ac 240V ac	199-FSMA1 (2), 199-GSMA1() 199-FSMA2 (2)
Bulletin 709 Motor Starter	120V ac	1401-N10(2)
Bulletin 700 Type R, RM Relays	ac coil	none required

Devices Requiring Surge Suppression

Bulletin 700 Type R Relay Bulletin 700 Type RM Relay	12V dc 12V dc	199-FSMA9
Bulletin 700 Type R Relay Bulletin 700 Type RM Relay	24V dc 24V dc	199-FSMA9
Bulletin 700 Type R Relay Bulletin 700 Type RM Relay	48V dc 48V dc	199-FSMA9
Bulletin 700 Type R Relay Bulletin 700 Type RM Relay	115-125V dc 115-125V dc	199-FSM10
Bulletin 700 Type R Relay Bulletin 700 Type RM Relay	230-250V dc 230-250V dc	199-FSMA11
Bulletin 700 Type N, P, or PK Relay	150V max, ac or dc	700-N24[(2)]
Miscellaneous electromagnetic devices limited to 35 sealed VA	150V max, ac or dc	700-N24[(2)]

(1) Varistor

(2) RC Type – Damage could occur with SLC 500 triac outputs if you use suppressors having RC networks and the load current is 15 mA or less.

Selecting Contact Protection

Inductive load devices such as motor starters and solenoids may require the use of some type of surge suppression to protect the controller output contacts. Switching inductive loads without surge suppression can significantly reduce the lifetime of relay contacts.

Surge Suppression for Inductive Load Devices

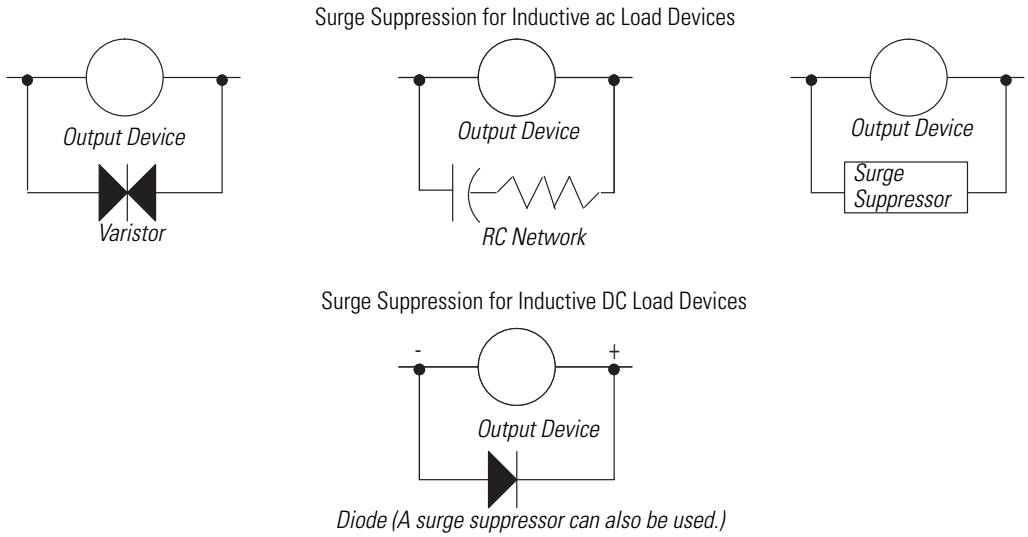

Contact protection methods for inductive ac and DC output devices.

These surge suppression circuits connect directly across the load device. This reduces arcing of the output contacts. (High transient can cause arcing that occurs when switching off an inductive device.)

Suitable surge suppression methods for inductive ac load devices include a varistor, an RC network, or an Allen-Bradley surge suppressor. These components must be appropriately rated to suppress the switching transient characteristic of the particular inductive device.

For inductive dc load devices, a diode is suitable. A diode, catalog number 1N4004, is acceptable for most applications.

A surge suppressor can also be used. See the table on page 49.

Locate the suppression device as close as possible to the load device.

Transistor Output Transient Pulses

This section applies to the following SLC 500 fixed I/O processors and SLC 500 I/O modules that have transistor outputs.

Fixed I/O processors with transistor outputs	I/O modules with transistor outputs	
• 1747-L20E	• 1746-OB8	• 1746-OBP16
• 1747-L20G	• 1746-OBP8	• 1746-OV16
• 1747-L20L	• 1746-OV8	• 1746-OVP16
• 1747-L20N	• 1746-OB16	• 1746-OB32
• 1747-L30L	• 1746-OB16E	• 1746-OB32E
• 1747-L40E	• 1746-OB16EI	• 1746-OV32
• 1747-L40L		

For the SLC 500 products listed above, the maximum duration of the transient pulse occurs when minimum load is connected to the output. However, for most applications the energy of the transient pulse is not sufficient to energize the load.

ATTENTION

A transient pulse occurs in transistor outputs when the external dc supply voltage is applied to the common output terminals (for example, via the master control relay). The sudden application of voltage creates this transient pulse. (See the following graph.) This condition is inherent in transistor outputs and is common to solid state devices. A transient pulse can occur regardless of the processor having power or not.

Transient Pulse

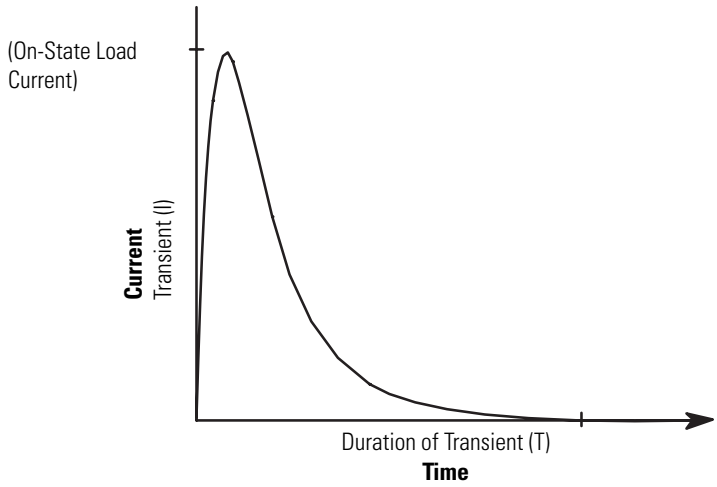

To reduce the possibility of inadvertent operation of devices connected to transistor outputs, adhere to the following guidelines:

- Either ensure that any programmable device connected to the transistor output is programmed to ignore all output signals until after the transient pulse has ended,
- Add an external resistor in parallel to the load to increase the on-state load current. The duration of the transient pulse is reduced when the on-state load current is increased.

The duration of the transient pulse is proportional to the load impedance. This is illustrated in the following graph.

Transient Pulse/Load Impedance Graph

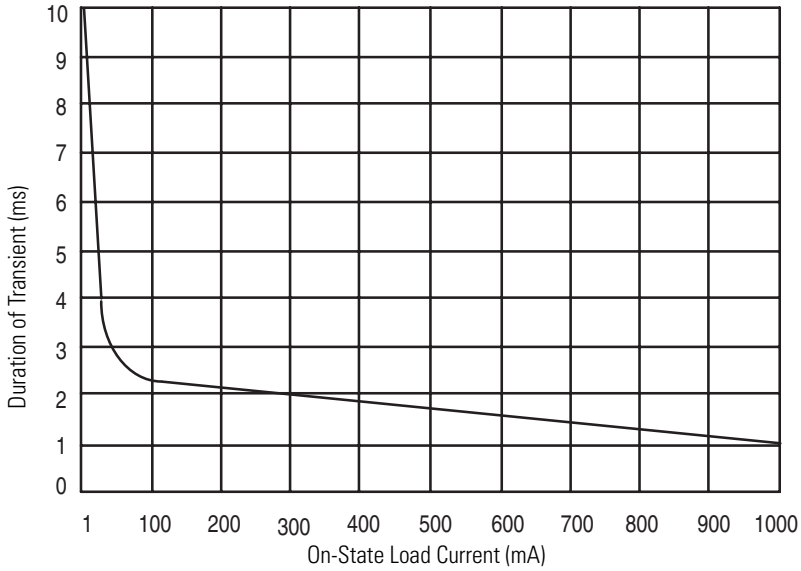

EXAMPLE

Increasing the load current by 100 mA decreases the transient time from approximately 7 ms to less than 2.5 ms. To calculate the size of the resistor added in parallel to increase the current, use the following information:

24V = your applied voltage
Need 100 mA of load current to reduce the transient to <2.5 ms. (taken from graph).

R (W) = V (Volts)/I (Amps)

Resistor value (Ohms) = Applied voltage (Volts)/Desired current (Amps) = 24/0.1 = 240 W

P (Watts) = 1^2 (Amps) x R (W)

Actual Power (Watts) = (Desired Current)^2 x Resistor Value = (0.1)2 x 240 = 2.4 (Watts)

Resistor size = 2 x Actual power (Watts) = 4.8 W = approximately 5 W

Use a resistor rated for 240 W at 5 W to decrease the transient time from approximately 7 ms to less than 2.5 ms.

Notes:

System Installation Recommendations

To help you install the SLC 500 programmable controller as safely and securely as possible, follow the specific recommendations in this chapter. For general installation guidelines, also refer to the requirements specific to your region.

- *Europe:* Reference the standards found in EN 60204 and your national regulations.
- *United States:* Refer to article 70E of the National Fire Protection Association (NFPA). It describes electrical safety requirements for employee workplaces.

This chapter covers the following:

- System overview
- Typical installation
- Spacing your controllers
- Preventing excessive heat
- Grounding guidelines
- Master control relay
- Power considerations
- Safety considerations
- Preventive maintenance

System Overview

Refer to the following sections when planning your system layout.

Environment and Enclosure

ATTENTION

This equipment is intended for use in a Pollution Degree 2 industrial environment, in overvoltage Category II applications (as defined in IEC publication 60664-1), at altitudes up to 2000 m (6561.7 ft) without derating.

This equipment is considered Group I, Class A industrial equipment according to IEC/CISPR Publication 11. Without appropriate precautions, there may be potential difficulties ensuring electromagnetic compatibility in other environments due to conducted as well as radiated disturbance.

This equipment is supplied as open type equipment. It must be mounted within an enclosure that is suitably designed for those specific environmental conditions that will be present and appropriately designed to prevent personal injury resulting from accessibility to live parts. The interior of the enclosure must be accessible only by the use of a tool. Subsequent sections of this publication may contain additional information regarding specific enclosure type ratings that are required to comply with certain product safety certifications.

See NEMA Standards publication 250 and IEC publication 60529, as applicable, for explanations of the degrees of protection provided by different types of enclosure. Also, see the appropriate sections in this publication, as well as the Allen-Bradley Industrial Automation Wiring and Grounding Guidelines, publication 1770-4.1, for additional installation requirements pertaining to this equipment.

Hazardous Location Considerations

Products marked CL1, DIV 2, GP A, B, C, D are suitable for use in Class I, Division 2, Groups A, B, C, D or non-hazardous locations only. Each product is supplied with markings on the rating nameplate indicating the hazardous location temperature code. When combining products within a system, the most adverse temperature code (lowest "T" number) may be used to help determine the overall temperature code of the system. Combinations of equipment in your system are subject to investigation by the local authority having jurisdiction at the time of installation.

WARNING

EXPLOSION HAZARD

- Do not disconnect equipment unless power has been removed or the area is known to be non-hazardous.
- Do not disconnect connections to this equipment unless power has been removed or the area is known to be non-hazardous. Secure any external connections that mate to this equipment using screws, sliding latches, threaded connectors, or other means provided with this product.
- Substitution of components may impair suitability for Class I, Division 2.
- All wiring must comply with N.E.C. article 501-4(b).

Typical Installation

The figure below consists of some components that make up a typical installation.

1. NEMA-rated enclosure suitable for your application and environment that shields your controller from electrical noise and airborne contaminants.
2. Disconnect device, to remove power from the system
3. Fused isolation transformer or a constant voltage transformer, as your application requires
4. Master control relay/emergency-stop circuit
5. Terminal blocks or wiring ducts
6. Suppression devices for limiting EMI (electromagnetic interference) generation

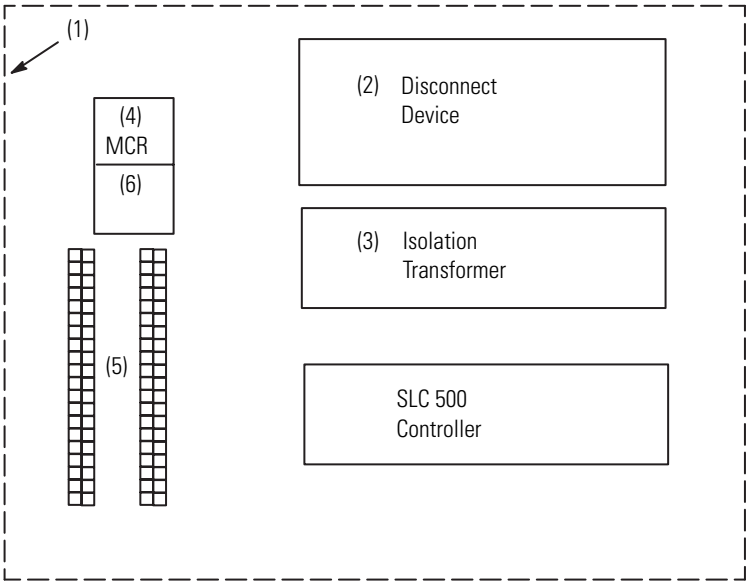

ATTENTION

Vertical mounting is not recommended due to thermal considerations.

Spacing Your Controller

The figure on the following page depicts acceptable layouts. Follow the recommended minimum spacing to allow for convection cooling within the enclosure. Air temperature in the enclosure must be kept within a range of 0 °C...60 °C (32 °F...140 °F).

IMPORTANT

Be careful of metal chips when drilling mounting holes for the controllers. Do not drill holes above a mounted SLC 500 controller.

IMPORTANT The 1746-C9 and 1746-C16 cables have a rigid, unbendable shrink wrap applied at the end of each connector, which provides strain relief. When using these cables, provide at least 101.6 mm (4 in.) of clearance at the side of the chassis to allow for proper bend radius of the cable.

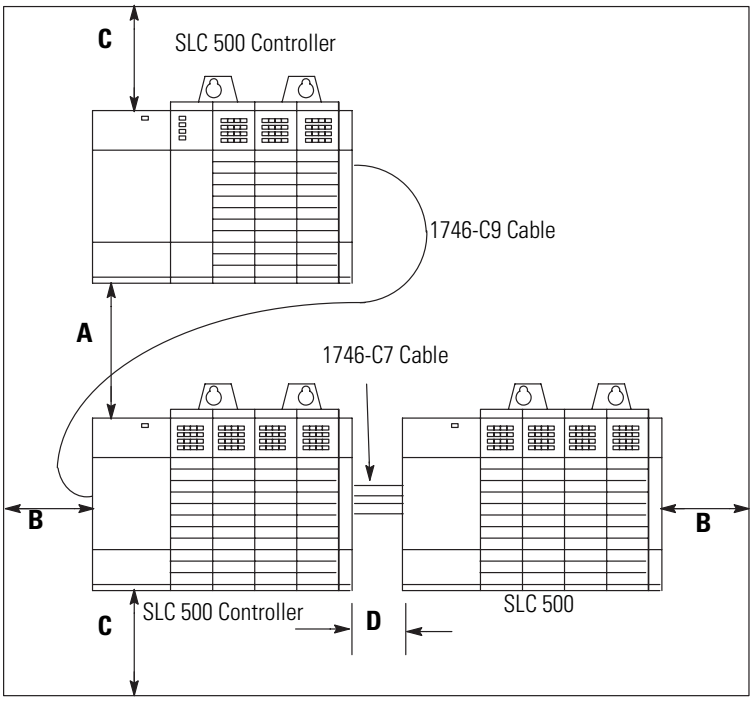

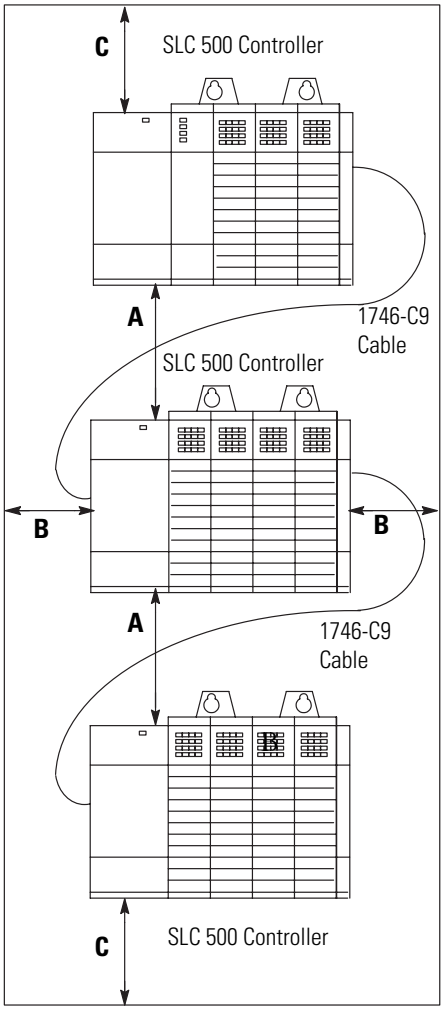

Recommended Spacing

A. 15.3...20.0 cm (6...8 in.) when using the 1746-C9 cable. If you mount two 13-slot chassis above each other, the distance cannot exceed 10.2...12.7 cm (4...5 in.).

B. Greater than 10.2 cm (4 in.).

C. Greater than 15.3 cm (6 in.).

D. 6.35...10.2 cm (2.5...4 in.) when using the 1746-C7 cable. If you are using a 1746-P4 power supply, your maximum spacing is 6.35 cm (2.5 in.).

Preventing Excessive Heat

For most applications, normal convection cooling will keep the SLC 500 controller components within the specified operating range of 0 °C...60 °C (32 °F...140 °F). Proper spacing of components within the enclosure is usually sufficient for heat dissipation.

In some applications, a substantial amount of heat is produced by other equipment inside or outside the enclosure. In this case, place blower fans inside the enclosure to assist in air circulation and to reduce hot spots near the SLC 500 controller.

Additional cooling provisions might be necessary when high ambient temperatures are encountered.

IMPORTANT Do not bring in unfiltered outside air. It may introduce harmful contaminants of dirt that could cause improper operation or damage to components. In extreme cases, you may need to use air conditioning to protect against heat build-up within the enclosure.

Grounding Guidelines

In solid-state control systems, grounding helps limit the effects of electrical noise due to electromagnetic interference (EMI). The ground path for the SLC 500 controller and its enclosure is provided by the equipment grounding conductor.

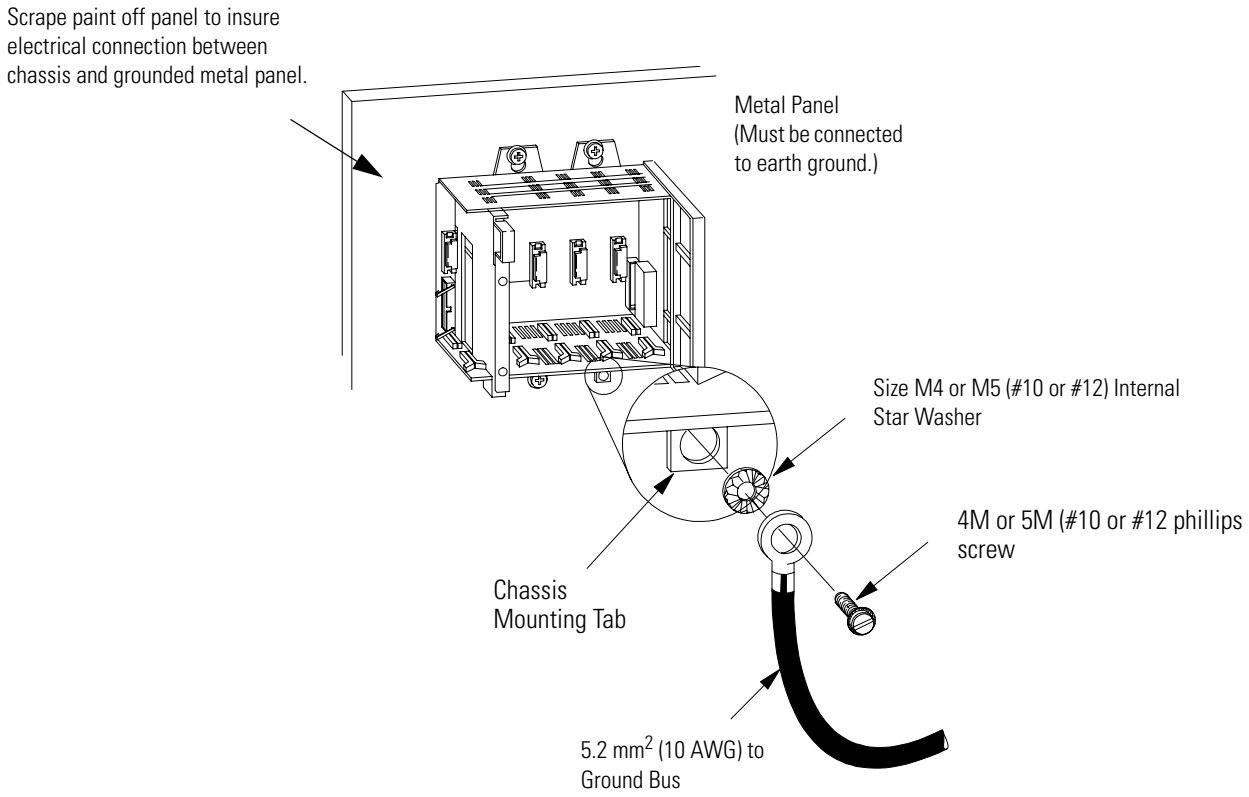

ATTENTION

The 1746 chassis, the enclosure, and other control devices must be properly grounded. All applicable codes and ordinances must be observed when wiring the SLC 500 controller system.

Connect Equipment Grounding Conductor to Ground Bus

Ground connections should run from the chassis and power supply on each SLC 500 controller and expansion unit to the ground bus. Exact connections will differ between applications.

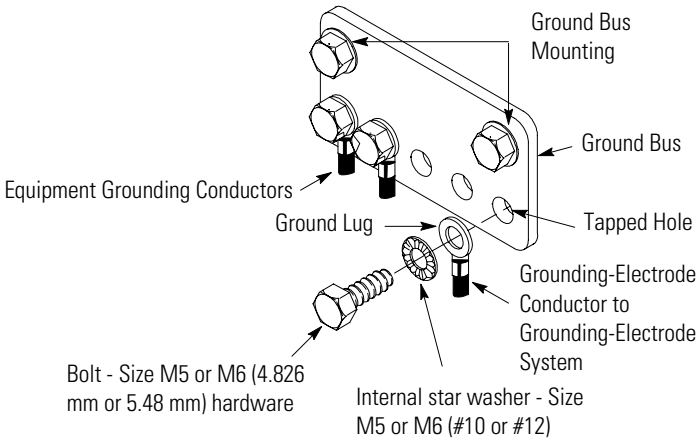

- Use 2.54 cm (1 in.) copper braid or 5.2 mm^2 (#10 AWG) copper wire to connect each chassis, the enclosure, and a central ground bus mounted on the back-panel.
- Use a steel enclosure to guard against electromagnetic interference (EMI).
- Make sure the enclosure door viewing window is a laminated screen or a conductive optical substrate (to block EMI).
- Install a bonding wire for electrical contact between the door and the enclosure; do not rely on the hinge.

IMPORTANT Do not lay one ground lug directly on top of the other; this type of connection can become loose due to compression of the metal lugs. Place the first lug between a star washer and a nut with a captive star washer. After tightening the nut, place the second lug between the first nut and a second nut with a captive star washer.

Connect Ground Bus to Grounding-Electrode System

The grounding-electrode system is at earth-ground potential and is the central ground for all electrical equipment and ac power within any facility. Use a grounding-electrode conductor to connect the ground bus to the grounding-electrode system. Use at minimum 8.3 mm^2 (#8 AWG) copper wire for the grounding-electrode conductor to guard against EMI. The National Electrical Code specifies safety requirements for the grounding-electrode conductor.

Europe: Reference EN 60204 for safety information on grounding. Also, refer to Allen-Bradley Programmable Controller Grounding and Wiring Guidelines,

publication 1770-4.1, and System Design for Control of Electrical Noise, publication GMC-RM001.

United States: An authoritative source on grounding requirements for most installations is the National Electrical Code. Also, refer to Allen-Bradley Programmable Controller Grounding and Wiring Guidelines, publication 1770-4.1 and System Design for Control of Electrical Noise, publication GMC-RM001.

In addition to the grounding required for the SLC 500 controller and its enclosure, you must also provide proper grounding for all controlled devices in your application. Care must be taken to provide each device with an acceptable grounding path.

This figure shows you how to run ground connections from the chassis to the ground bus. The recommended grounding method is shown below. Using a ground bus reduces the electrical resistance at the connection.

Ground Connection Paths

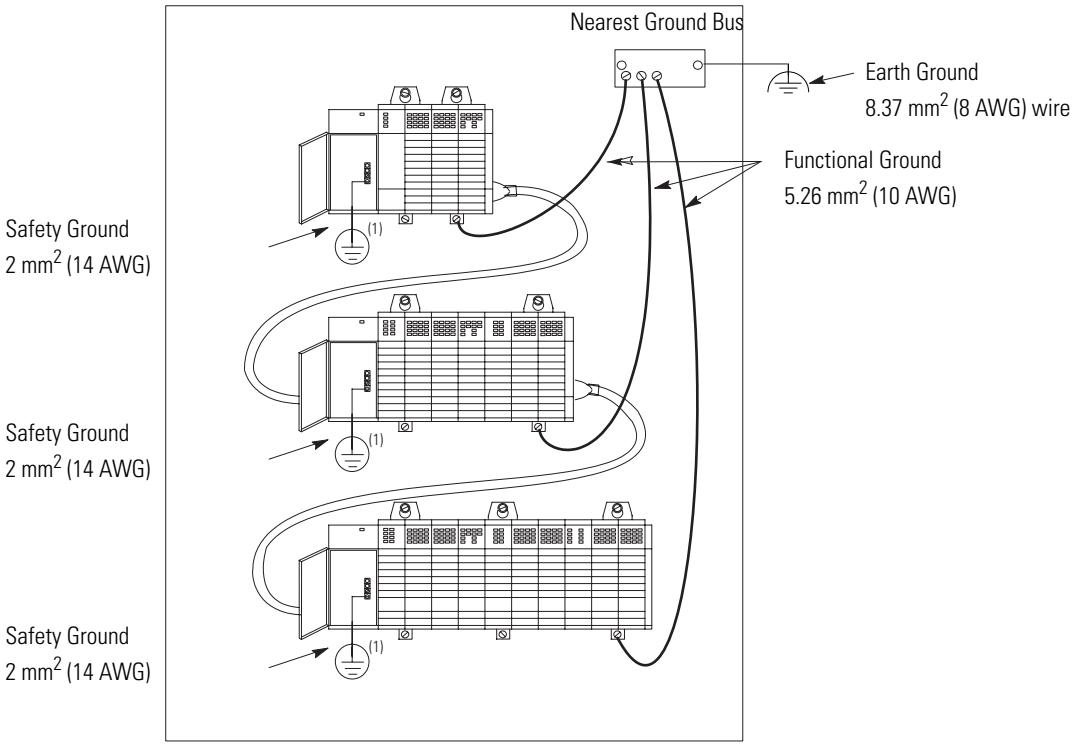

(1) Keep safety ground connection to panel as short as possible.

Special Grounding Considerations for dc Applications using 1746-P3 (previous to revision B)

This information describes special wiring considerations for the 1746-P3 power supply that is not labeled as revision (REV) B or later-.

Keep wire length as short as possible.

ATTENTION

Any voltage applied to the 1746-P3 DC NEUT terminal will be present at the SLC logic ground and the processor DH-485 port. To prevent unwanted potentials across the logic ground of the controller and/or damage to the SLC chassis, the DC NEUTRAL of the external dc power source must be either isolated from the SLC chassis ground, or connected to earth ground.

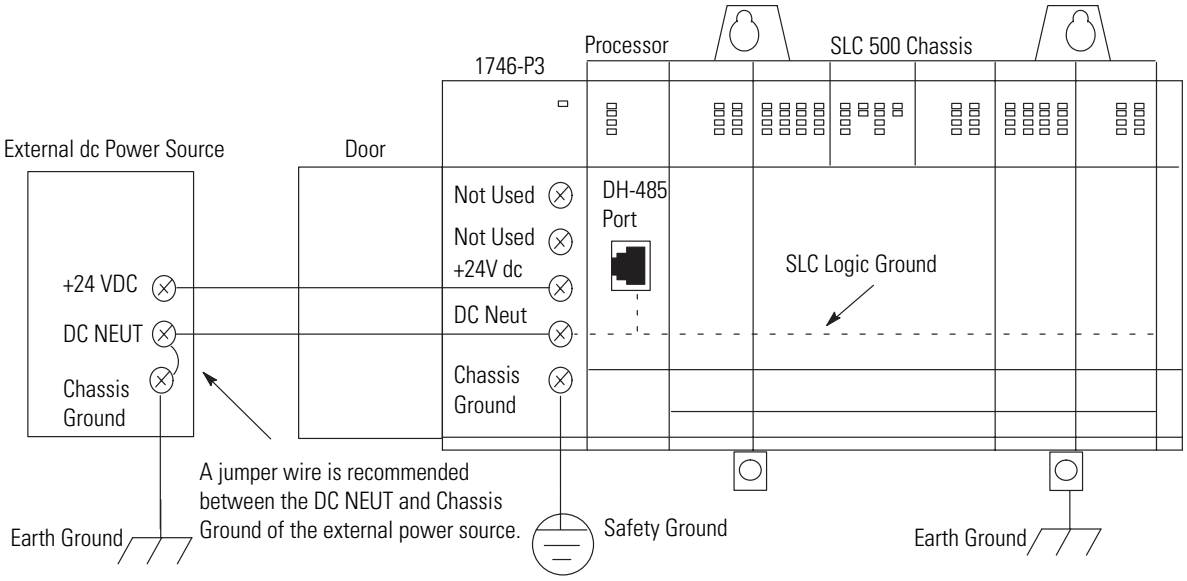

IMPORTANT SLC 500 series A chassis (1746-A4, 1746-A7, 1746-A10, and 1746-A13) manufactured before November 1992 have a resistor between the logic ground and chassis ground as the drawing on the following page illustrates. This resistor could be damaged if the wiring recommendation described within the attention box above is not followed. See the figure on the following page for the location of the resistor. SLC 500 series A chassis (1746-A4, 1746-A7, 1746-A10, and 1746-A13) with a manufacture date of November 1992 or later do not have this resistor. SLC 500 series B chassis have a 1 MW resistor that limits the current between logic ground and chassis ground.

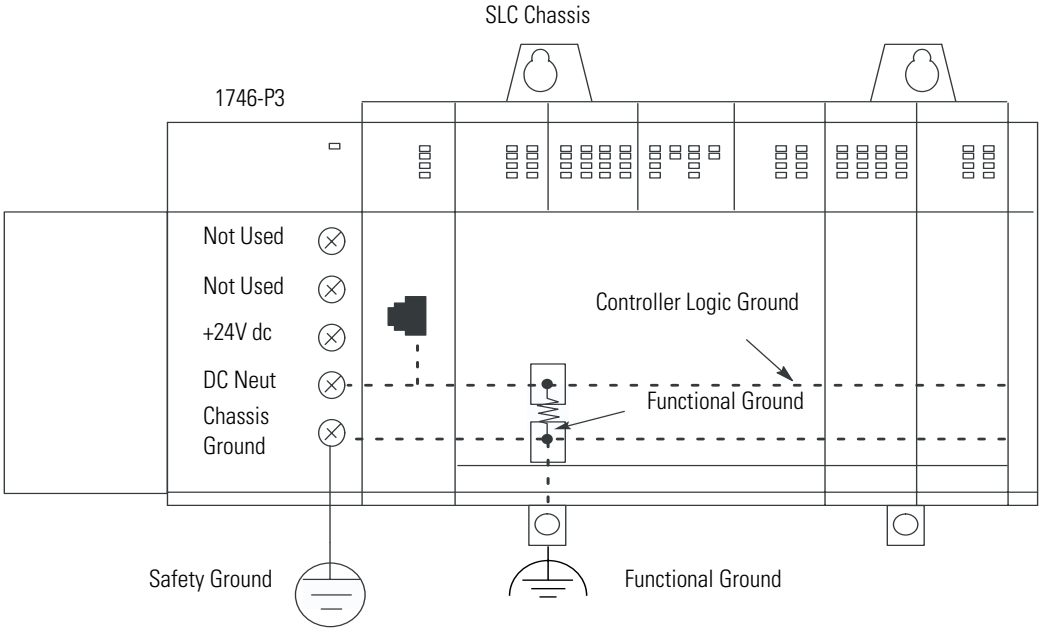

Determining the Date of the SLC 500 Series A Chassis

The date of the chassis is found within the serial number imprinted on the chassis nameplate on the right side of the chassis.

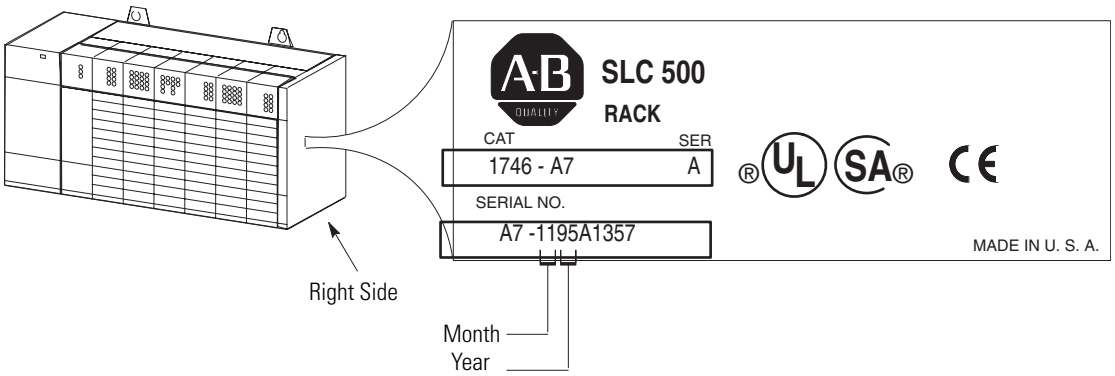

Master Control Relay

A hard-wired master control relay (supplied by you) provides a convenient means for emergency controller shutdown. Since the master control relay allows the placement of several emergency-stop switches in different locations, its installation is important from a safety standpoint. Overtravel limit switches or mushroom head push buttons are wired in series so that when any of them opens, the master control relay is de-energized. This removes power to input and output device circuits.

ATTENTION

Never alter these circuits to defeat their function, since serious injury and/or machine damage could occur.

IMPORTANT

If you are using a dc power supply, interrupt the dc side rather than the ac side to avoid the additional delay of power supply turn-on and turn-off. The dc power supply should receive its power directly from the fused secondary of the transformer. Connect the power to the dc input and output circuits through a set of master control relay contacts.

Place the main power disconnect switch where operators and maintenance personnel have quick and easy access to it. If you mount a disconnect switch inside the controller enclosure, place the switch operating handle on the outside of the enclosure, so that you can disconnect power without opening the enclosure.

Whenever any of the emergency-stop switches are opened, power to input and output devices is stopped.

When you use the master control relay to remove power from the external I/O circuits, power continues to be provided to the controller's power supply so that diagnostic indicators on the processor can still be observed.

The master control relay is not a substitute for a disconnect to the controller. It is intended for any situation where the operator must quickly de-energize I/O devices only. When inspecting or installing terminal connections, replacing output fuses, or working on equipment within the enclosure, use the disconnect to shut off power to the rest of the system.

IMPORTANT The operator must not control the master control relay with the processor. Provide the operator with the safety of a direct connection between an emergency-stop switch and the master control relay.

Emergency-Stop Switches

Adhere to the following points concerning emergency-stop switches.

- Do not program emergency-stop switches in the controller program. Any emergency-stop switch should turn off all machine power by turning off the master control relay.
- Observe all applicable local codes concerning the placement and labeling of emergency-stop switches.
- Install emergency-stop switches and the master control relay in your system. Make certain that relay contacts have a sufficient rating for your application. Emergency-stop switches must be easy to reach. See the schematic on page 69.

Power Considerations

Refer to the following sections regarding power.

Common Power Source

All chassis power supplies should have the same power source as the input and output devices. This helps reduce the chance of electrical interference due to multiple sources and grounds as well as helps maintain system integrity if power is interrupted.

The processor detects the absence of power to any chassis in the system. If power to any chassis is lost (or not yet applied), the CPU FAULT status indicator turns on and all controller outputs in the local chassis are de-energized. Output states in any remote chassis are determined by configuration settings at that chassis.

This fault detection makes it necessary that you apply power to the expansion chassis before you apply power to the chassis containing the processor to avoid an unwanted fault. Of course, applying power in sequence is unnecessary if all chassis have a common power source.

Isolation Transformer

In many industrial applications, a step-down transformer is required to reduce line voltage to 120 or 240V ac. This transformer also provides isolation to protect equipment from high voltage transients that may be generated on your power distribution system.

ATTENTION

Your SLC 500 power supply can be damaged by voltage surges when switching inductive loads such as motors, motor starters, solenoids, and relays. To avoid damage to your SLC 500 power supply in these applications, use an isolation transformer to isolate the power supply from harmful voltage surges.

Grounded ac Power-Distribution System with Master-Control Relay

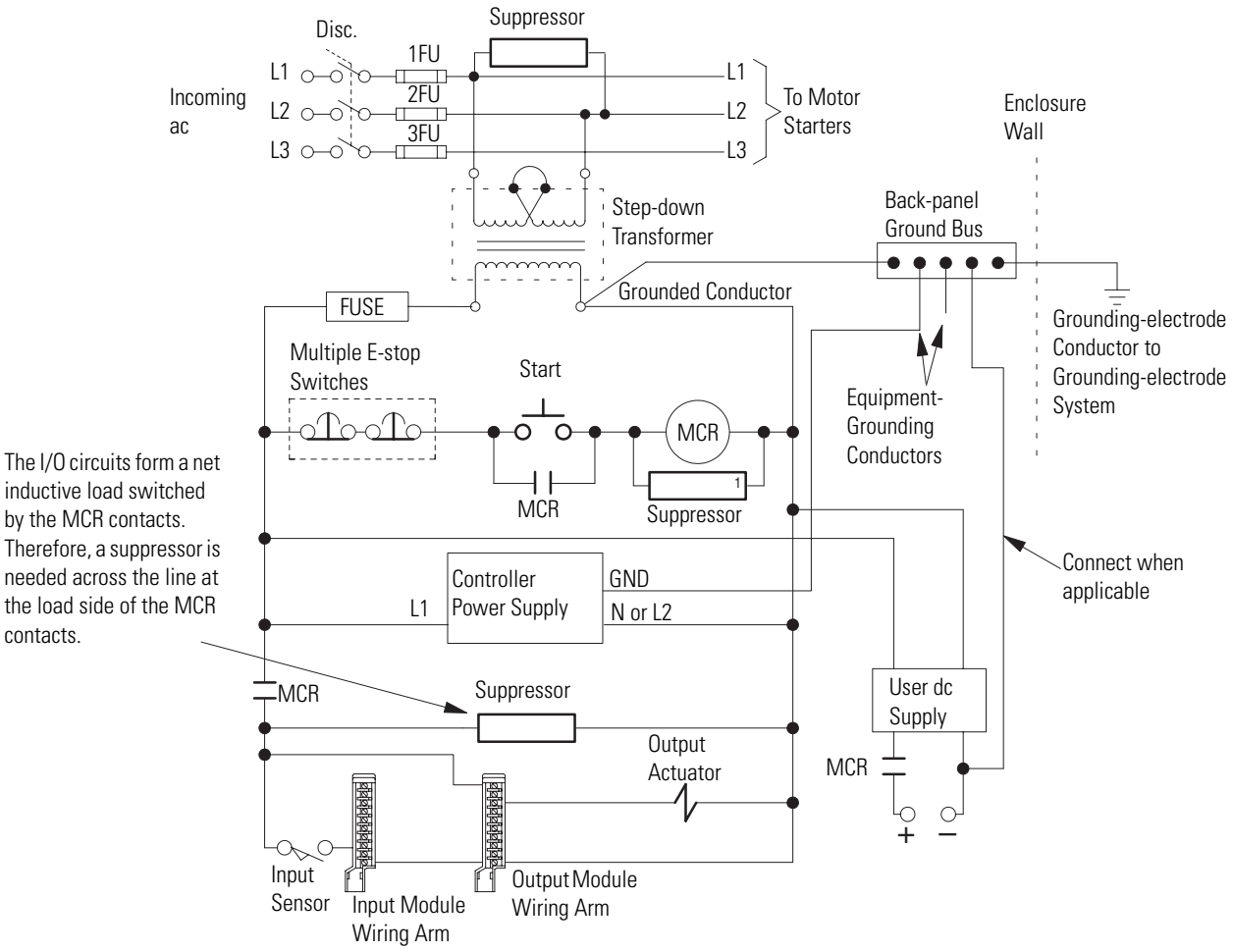

Power Supply Required Input Voltage Characteristics

- The applied input voltage must be at or below 132V ac RMS (265V ac RMS in 240 Volt mode).
- Minimum acceptable value of the applied input voltage must be above 85V ac RMS (170V ac RMS in 240 Volt mode).
- The frequency of the applied voltage must be within 47...63 Hz.
- Both the positive and negative half cycles must be symmetrical and conform to these requirements.

Loss of Power Source

The chassis power supplies are designed to withstand brief power losses without affecting the operation of the system. The time the system is operational during power loss is called program scan hold-up time after loss of power. The duration of the power supply hold-up time depends on the number, type, and state of the I/O modules, but is typically 20 ms...3 s. When the duration of power loss reaches a limit, the power supply signals the processor that it can no longer provide adequate dc power to the system. This is referred to as a power supply shutdown. The power supply status indicator is turned off.

In multi-chassis systems, power outages of 20...300 ms in duration can cause a remote power fail error to occur. You can clear this error by cycling power to your system or by using a programming device.

Input States on Power Down

The power supply hold-up time as described above is generally longer than the turn-on and turn-off times of the input modules. Because of this, the input state change from On to Off that occurs when power is removed may be recorded by the processor before the power supply shuts down the system. Understanding this concept is important. Write the user program to take this effect into account. For example, hard-wire power to one spare input. In the user program, check to be sure that one input is on; otherwise, jump to the end of the program and avoid scanning the logic. Use of a common power source as recommended in the previous section is assumed.

Power Supply Undervoltage Operation

SLC 500 controllers continue to operate (hold-up) for a short period of time if the input voltage to the power supply drops below the recommended operating voltage range. The controller continues to scan the user program and control I/O during this time. CPU hold-up time is 20 ms...3 s depending on the power supply and loading.

SLC 500 controllers turn OFF (stop scanning and disable outputs) if input voltage to the power supply is removed or drops below the recommended operating range for a period exceeding the CPU hold-up time. The controller resumes operation automatically when the input voltage is restored to normal.

If the input voltage to the 1746-P7 power supply falls into a range of 4...9V for a period exceeding the CPU hold-up time, the controller turns OFF and will not turn back ON until the input voltage is increased to 11V dc.

SLC 500 Operation with 24V dc User Power Overcurrent Condition

Power Supply Cat. No.	SLC Operation	Recovery Procedure
1746-P1 series A (made in Japan)	power supply shutdown, CPU fault	Reload user program
1746-P1 series A (made in Malaysia - current production)	24V dc user shutdown, CPU continues	Correct overcurrent condition
1746-P2 series A and B	power supply shutdown, CPU fault	Reload user program
1746-P2 series C	24V dc user shutdown, CPU continues	Correct overcurrent condition
1746-P4 series A	power supply shutdown, CPU fault	Reload user program
1746-P5 series A	24V dc user shutdown, CPU continues	Correct overcurrent condition
1746-P6 series A	24V dc user shutdown, CPU continues	Correct overcurrent condition

ATTENTION

For 1746-P1 (made in Malaysia), 1746-P2 series C, 1746-P5 series A, and 1746-P6 series A power supply, to avoid unexpected operation due to 24V dc user power shutdown, monitor the 24V dc user output with a 24V dc input channel.

Safety Considerations

Safety considerations are an important element of proper system installation. Actively thinking about the safety of yourself and others, as well as the condition of your equipment, is of primary importance.

Disconnecting Main Power

Locate the main power disconnect switch where operators and maintenance personnel have quick and easy access to it. Ideally, the disconnect switch is mounted on the outside of the enclosure, so that it can be accessed without opening the enclosure. In addition to disconnecting electrical power, de-energize all other sources of power (pneumatic and hydraulic) before working on a machine or process controlled by an SLC controller.

Safety Circuits

Circuits installed on the machine for safety reasons, like overtravel limit switches, stop push buttons, and interlocks, should always be hard-wired directly to the master control relay. These devices must be wired in series so that when any one device opens, the master control relay is de-energized thereby removing power to the machine. Never alter these circuits to defeat their function. Serious injury or machine damage could result.

Power Distribution

There are some points about power distribution that you should be aware of. First, the master control relay must be able to inhibit all machine motion by removing power to the machine I/O devices when the relay is de-energized.

Second, if you are using a dc power supply, interrupt the load side rather than the ac line power. This avoids the additional delay of power supply turn-on and turn-off. The dc power supply should be powered directly from the fused secondary of the transformer. Power to the dc input and output circuits is connected through a set of master control relay contacts.

Periodic Tests of Master Control Relay Circuit

Any part can fail, including the switches in a master control relay circuit. The failure of one of these switches would most likely cause an open circuit, which would be a safe power-off failure. However, if one of these switches shorts

out, it no longer provides any safety protection. These switches should be tested periodically to assure they will stop machine motion when needed.

Preventive Maintenance

The printed circuit boards of the controller must be protected from dirt, oil, moisture and other airborne contaminants. To protect these boards, the controller must be installed in an enclosure suitable for the environment. The interior of the enclosure should be kept clean and the enclosure door should be kept closed whenever possible.

Regularly inspect your terminal connections for tightness. Loose connections may cause improper functioning of the controller or damage the components of the system.

ATTENTION

To ensure personal safety and to guard against damaging equipment, inspect connections with incoming power off.

The National Fire Protection Association (NFPA) provides recommendations for electrical equipment maintenance. Refer to article 70B of the NFPA for general requirements regarding safety related work practices.

Notes:

Mounting Your SLC 500 Control System

This chapter provides mounting dimensions for:

- 4, 7, 10, and 13-slot chassis.
- link coupler (AIC).
- Data Terminal Access Module (DTAM).
- DTAM Plus Operator Interface.
- DTAM Micro Operator Interface.
- AIC+ Advanced Interface Converter.
- DNI DeviceNet Network Interface.
- ENI EtherNet Network Interface.

Mounting Modular Hardware Style Units

You can mount the modular hardware style units directly to the back panel of your enclosure using the mounting tabs and #10 or #12 screws. The torque requirement is 3.4 Nm (30 lb-in) maximum.

4-slot Modular Chassis

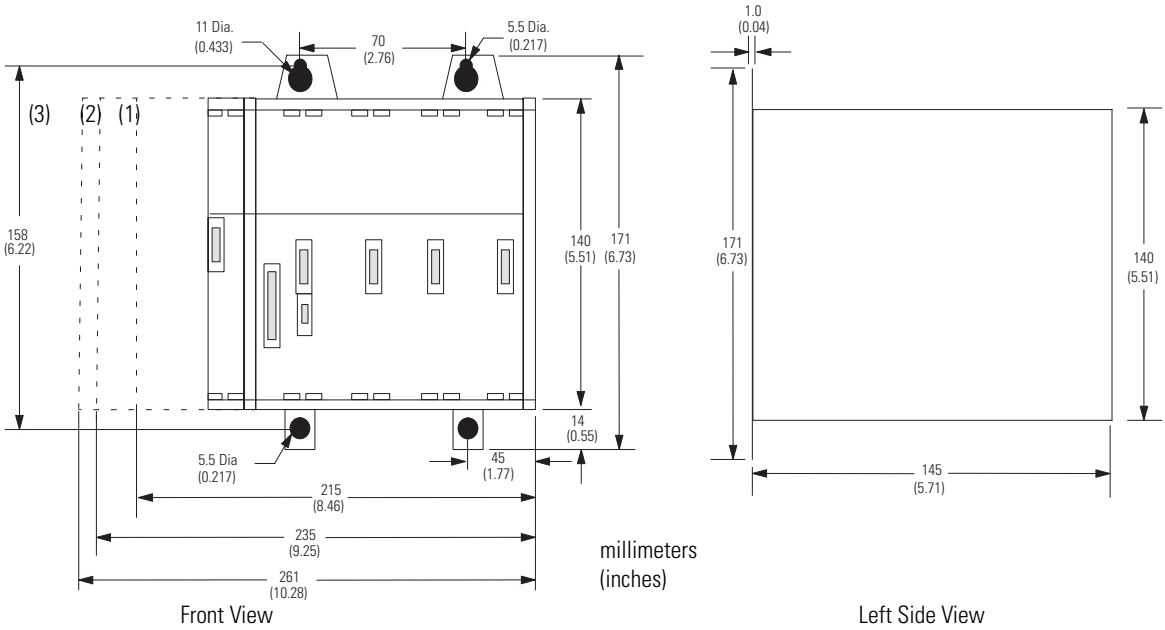

(1) Dimensions for 1746-P1 power supply.

(2) Dimensions for 1746-P2, 1746-P3, 1746-P5, 1746-P6, and 1746-P7 power supplies.

(3) Dimensions for 1746-P4 power supply.

7-slot Modular Chassis

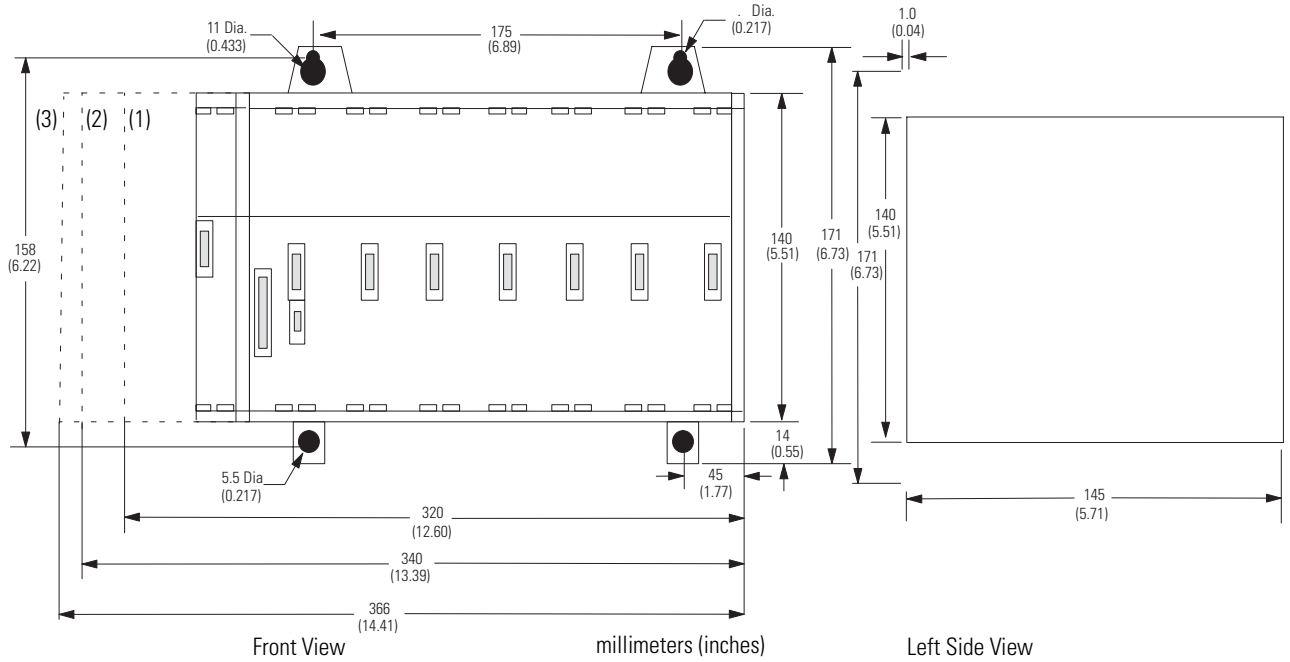

10-slot Modular Chassis

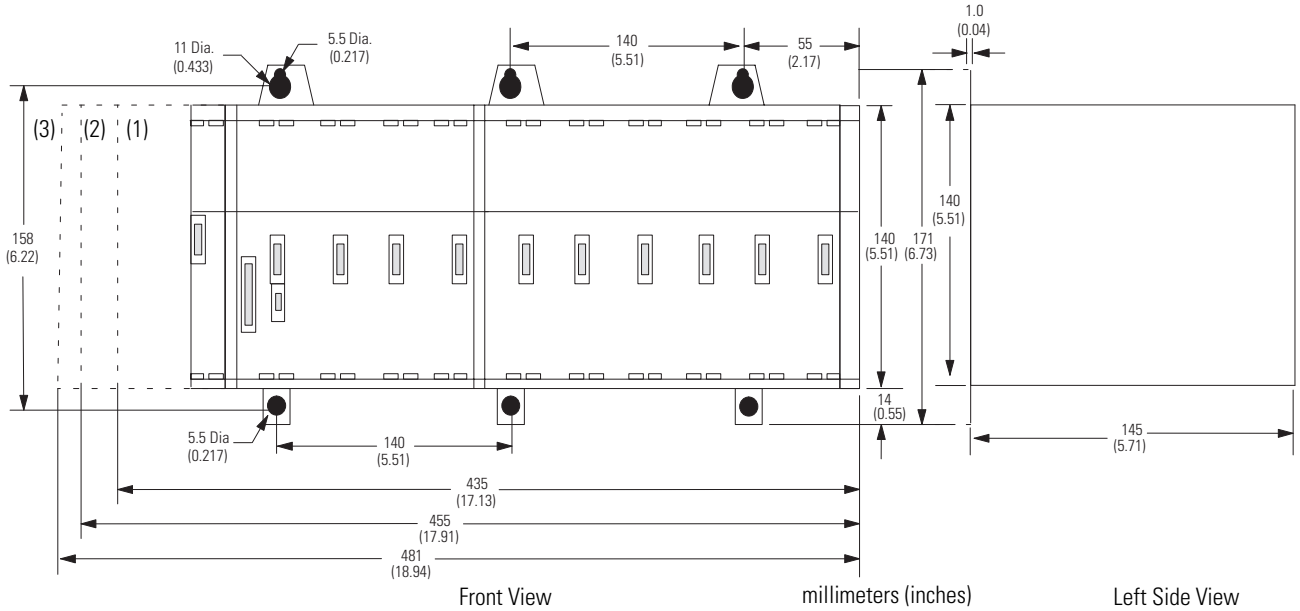

(1) Dimensions for 1746-P1 power supply.

(2) Dimensions for 1746-P2, 1746-P3, 1746-P5, 1746-P6, and 1746-P7 power supplies.

(3) Dimensions for 1746-P4 power supply.

13-slot Modular Chassis

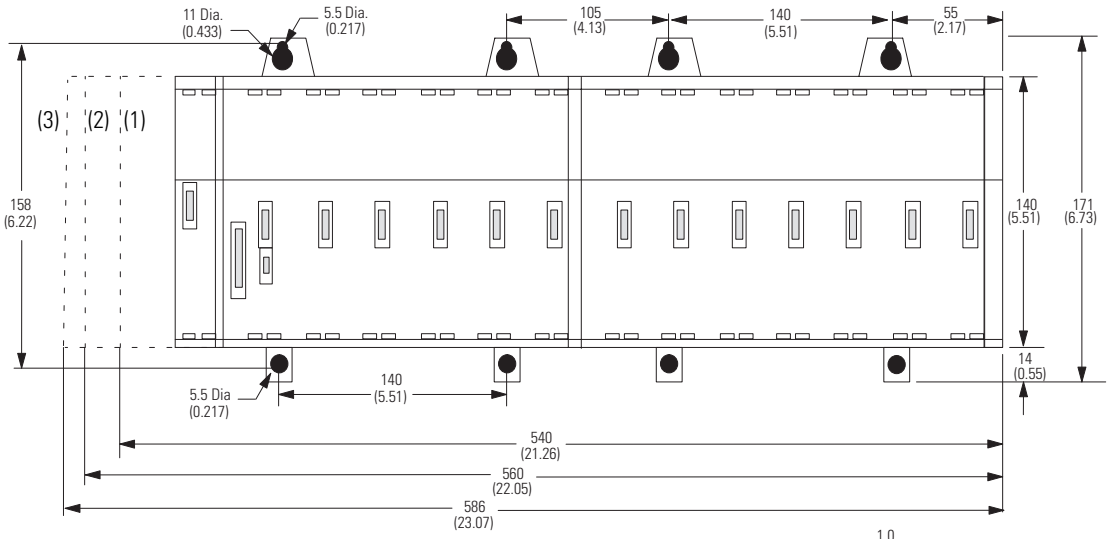

Front View

millimeters
(inches)

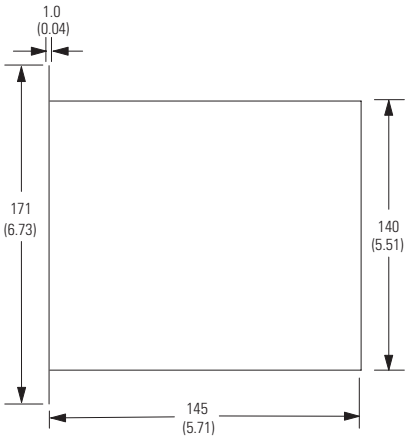

Left Side View

(1) Dimensions for 1746-P1 power supply.

(2) Dimensions for 1746-P2, 1746-P3, 1746-P5, 1746-P6, and 1746-P7 power supplies.

(3) Dimensions for 1746-P4 power supply.

Link Coupler (AIC)

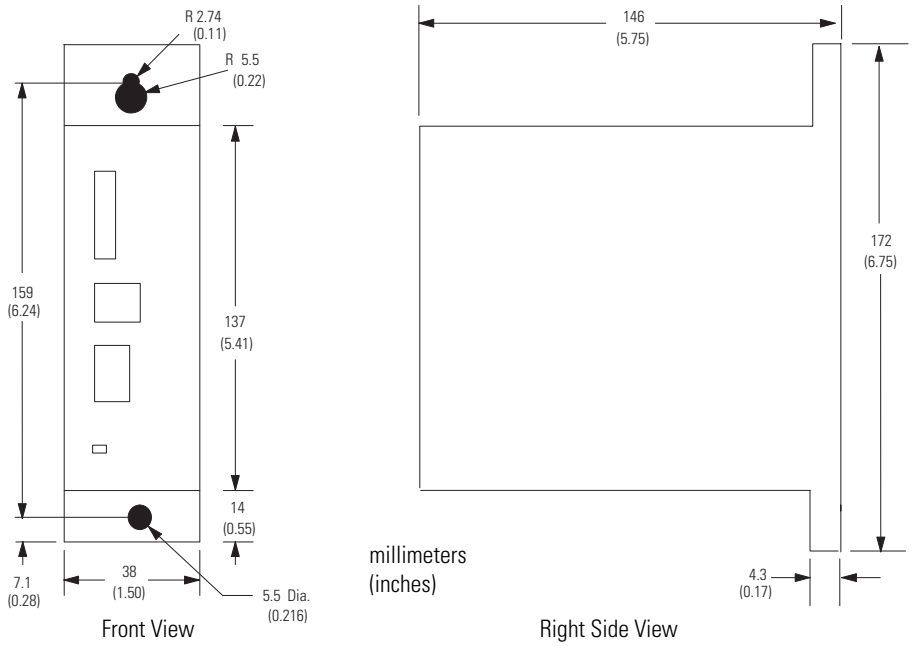

Data Table Access Module (DTAM, DTAM Plus, and DTAM Micro)

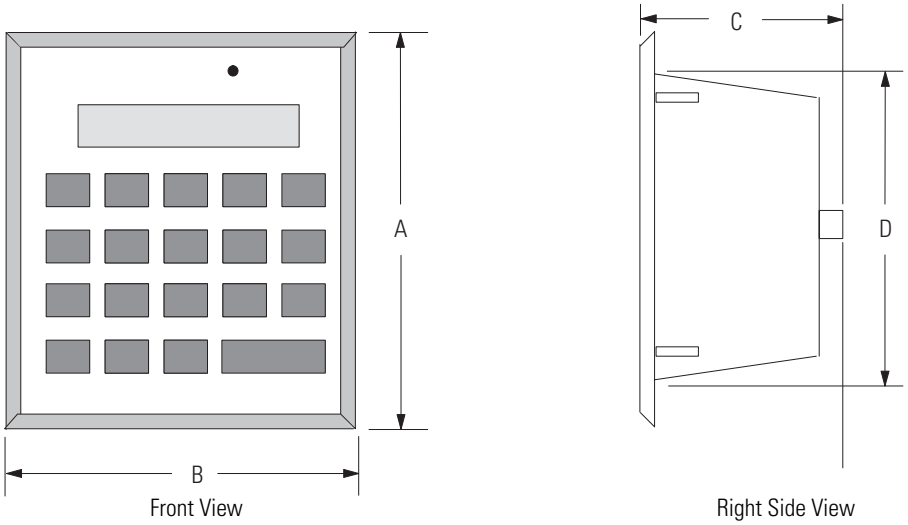

Data Table Access Module	Dimensions in millimeters (inches)			
	A	**B**	**C**	**D**
DTAM	152 (6.0)	140 (5.5)	69 (2.76)	127 (5.0)
DTAM Plus	215.9 (8.5)	165.1 (6.5)	45.7 (1.8)	193 (7.6)
DTAM Micro	137.2 (5.4	175.3 (6.9)	45.7 (1.8)	99.1 (3.9)

AIC+ Advanced Interface Converter (1761-NET-AIC)
DeviceNet Interface (1761-NET-DNI)
Ethernet Interface (1761-NET-ENI)

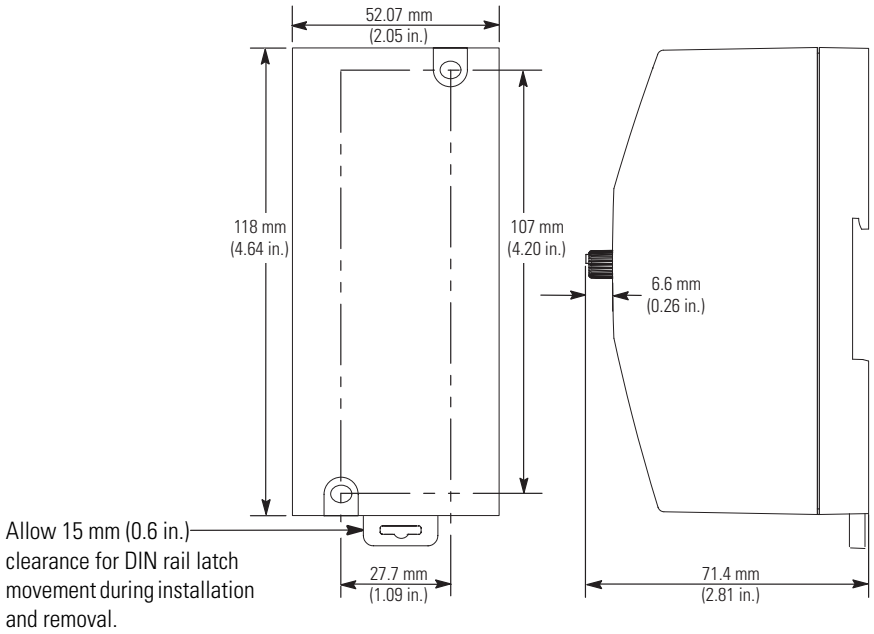

Identifying the Components of Your Processor

This chapter covers the following:

- SLC 5/01 hardware features
- SLC 5/02 hardware features
- SLC 5/03 hardware features
- SLC 5/04 hardware features
- SLC 5/05 hardware features
- Keyswitch for the SLC 5/03, SLC 5/04, and SLC 5/05 processors

SLC 5/01 Processor Hardware Features

The SLC 5/01 processor provides:

- two choices of program memory size - 1 K or 4 K instructions.
- control of up to 3840 input and output points.
- powerful ladder logic programming instruction set.
- subroutines.
- a DH-485 communication channel (peer-to-peer communication response to message commands only).
- capacitor backup for the 1747-L511 module; battery backup for the 1747-L514 module.
- program using your programming software.
- UL listed to US and Canadian Safety Standards, CE compliant, C-Tick marked.

The figure on page 82 shows the hardware components of the SLC 5/01 processor (1747-L511 and 1747-L514).

SLC 5/01 Hardware Components

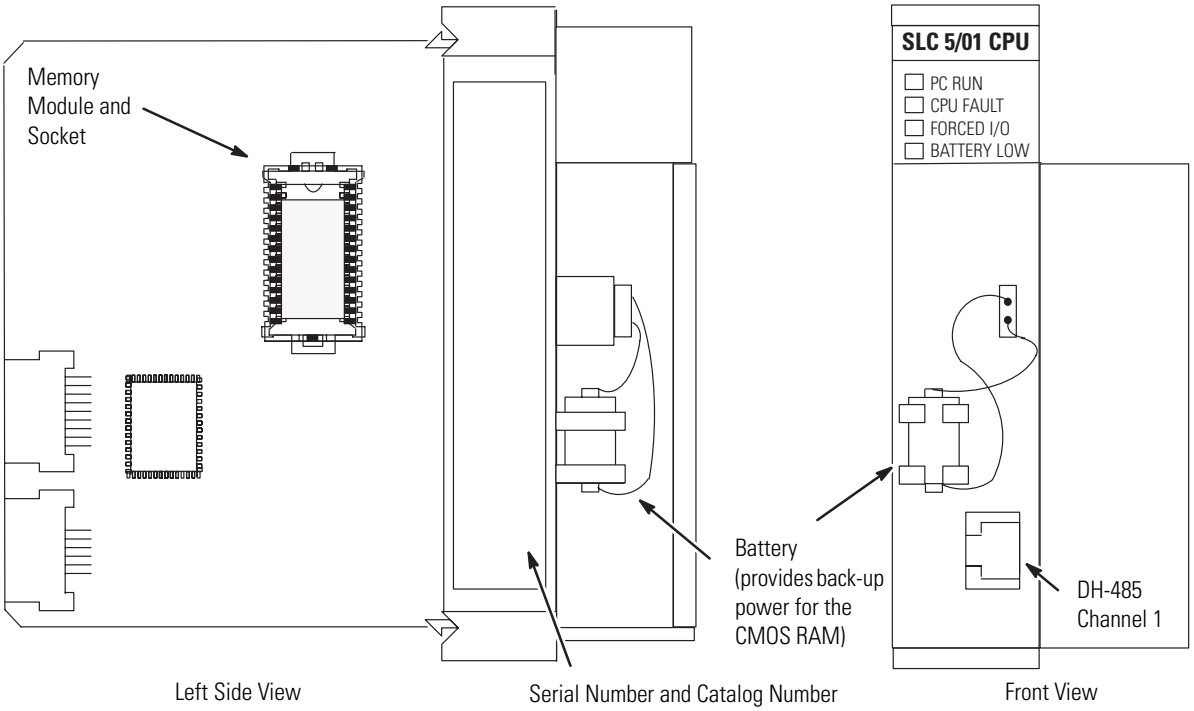

The table below provides a general explanation of the SLC 5/01 processor status indicators.

SLC 5/01 Status Indicators

Processor Status Indicator[1]	When It Is	Indicates that
PC RUN (Color: red)	On (steady)	The processor is in the Run mode.
	Off	The processor is in a mode other than Run.
CPU FAULT (Color: red)	Flashing (at power up)	The processor has not been configured.
	Flashing (during operation)	The processor detects a major error either in the processor, chassis or memory.
	On (steady)	A fatal error is present (no communication).
	Off	There are no errors.
FORCED I/O (Color: red)	Flashing	One or more input or output addresses have been forced to an On or Off state but the forces have not been enabled.
	On (steady)	The forces have been enabled.
	Off	No forces are present or enabled.
BATTERY LOW (Color: red)	On (steady)	The battery voltage has fallen below a threshold level or the battery and the battery jumper are missing.
	Off	The battery is functional, or the battery jumper is present.

(1) See chapter 10 for more information on status indicator status.

SLC 5/02 Processor Hardware Features

The SLC 5/02 processor offers an enhanced instruction set, increased diagnostic capabilities, and expanded communication capabilities beyond the SLC 5/01 processors and fixed controllers. The SLC 5/02 processor provides:

- program memory size of 4 K instructions.
- control of up to 4096 input and output points.
- PID - used to provide closed loop process control.
- indexed addressing.
- interrupt capability.
- user fault routines.
- ability to handle 32-bit signed math functions.
- built-in DH-485 communication channel (initiation of peer-to-peer communication).
- battery-backed RAM.
- communication status indicator; when on, the status indicator indicates that there is communication activity on the DH-485 network.
- program using your programming software.
- UL listed to US and Canadian Safety Standards, CE compliant, C-Tick marked.

The figure on page 84 shows some of the hardware components of the SLC 5/02 processor.

SLC 5/02 Hardware Components

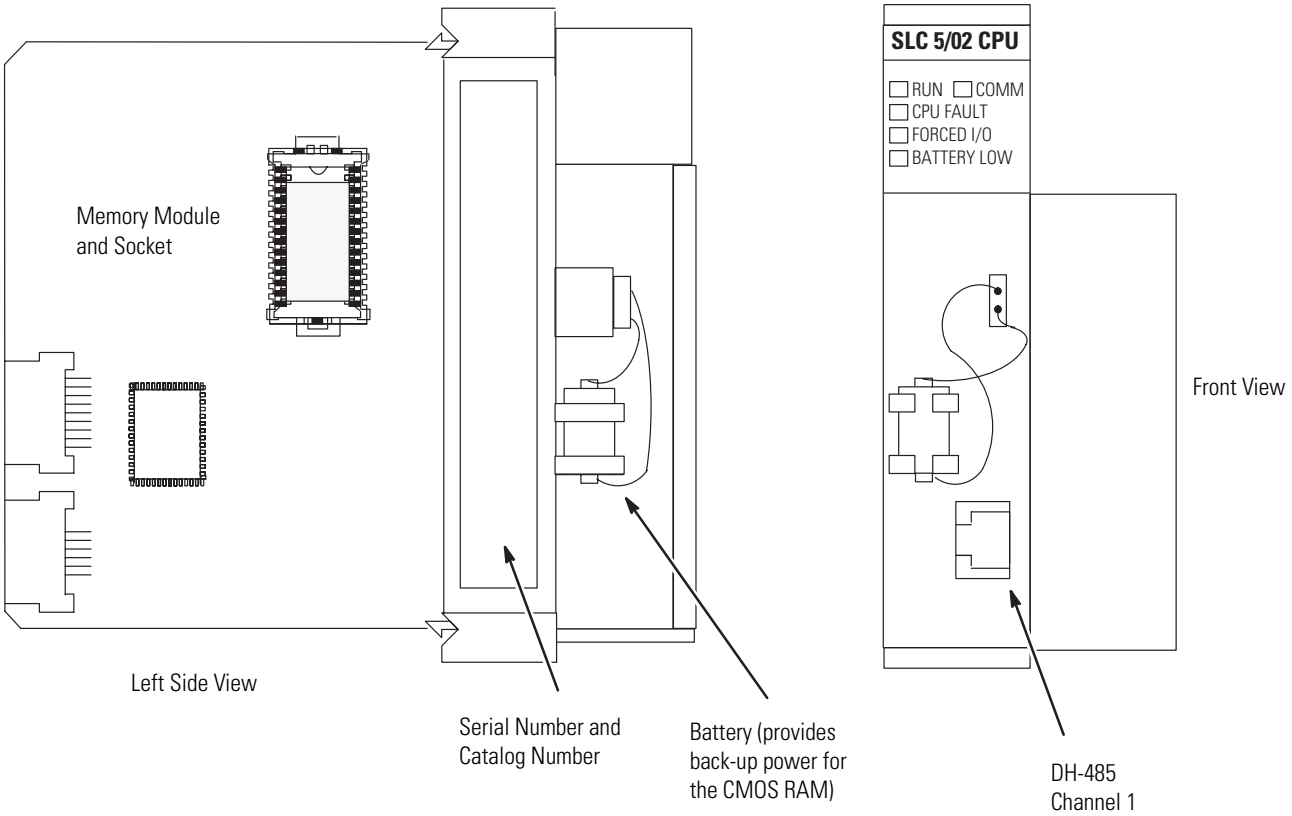

The table below provides a general explanation of each processor status indicator (for both the SLC 5/02 series B and C processor).

SLC 5/02 Status Indicators

Processor Status Indicator[1]	When It Is	Indicates that
RUN (Color: red)	On (steady)	The processor is in the Run mode.
	Off	The processor is in a mode other than Run.
CPU FAULT (Color: red)	Flashing (at power up)	The processor has not been configured.
	Flashing (during operation)	The processor detects a major error either in the processor, expansion chassis or memory.
	On (steady)	A fatal error is present (no communication).
	Off	There are no errors.
FORCED I/O (Color: red)	Flashing	One or more input or output addresses have been forced to an On or Off state but the forces have not been enabled.
	On (steady)	The forces have been enabled.
	Off	No forces are present or enabled.

Processor Status Indicator[1]	When It Is	Indicates that
BATTERY LOW (Color: red)	On (steady)	The battery voltage has fallen below a threshold level or the battery is missing or not connected.
	Off	The battery is functional.
COMM (Color: red)	On (steady)	The SLC 5/02 processor is connected to an active DH485 network.
	Off	The SLC 5/02 processor is not receiving data.

(1) See chapter 10 for more information on status indicator status.

SLC 5/03 Processor Hardware Features

The SLC 5/03 processor offers:

- program memory size of 8 K, 16 K, 32 K.
- control of up to 4096 input and output points.
- online programming (includes runtime editing).
- built-in DH-485 channel.
- built-in RS-232 channel, supporting:
  - DF1 full-duplex for point-to-point communication; remotely via a modem, or direct connection to programming or operator interface devices. (Use a 1747-CP3 cable for direct connection.).
  - DF1 radio modem for radio modem (peer-to-peer) communication.
  - DF1 half-duplex master/slave for SCADA type (point-to-multipoint) communication.
  - DH-485 (Serves as a second DH-485 channel. Use a 1761-NET-AIC interface with a 1747-CP3, 1761-CBL-AC00, or 1761-CBL-AP00 cable to connect to the DH-485 network.).
  - Modbus RTU Master communication with Modbus RTU slave devices.
  - ASCII I/O for connection to other ASCII devices, such as bar code readers, serial printers, and weigh scales.
- channel-to-channel passthru (DH-485 to DF1 full-duplex, DF1 half-duplex Master, DF1 radio modem, or DH-485).
- remote I/O passthru.
- DeviceNet passthru.
- built-in real-time clock/calendar.
- 2 ms Selectable Timed Interrupt (STI).
- 0.50 ms Discrete Input Interrupt (DII).
- advanced math features - trigonometric, PID, exponential, floating-point, and the compute instruction.
- indirect addressing.
- logical ASCII addressing in PLC-5 type messages.
- flash PROM provides firmware upgrades without physically changing EPROMS.
- optional flash EPROM memory module available.
- keyswitch - RUN, REMote, PROGram (clear faults).
- battery-backed RAM.
- additional instructions such as swap and scale with parameters (SLC 5/03 OS302 processor or later).
- multi-point list (SLC 5/03 OS302 processor or later).
- UL listed to US and Canadian Safety Standards, CE compliant, C-Tick marked.

The figure on page 87 shows some of the hardware components of the SLC 5/03 processors (1747-L531, 1747-L532, and 1747-L533).

SLC 5/03 Hardware Components

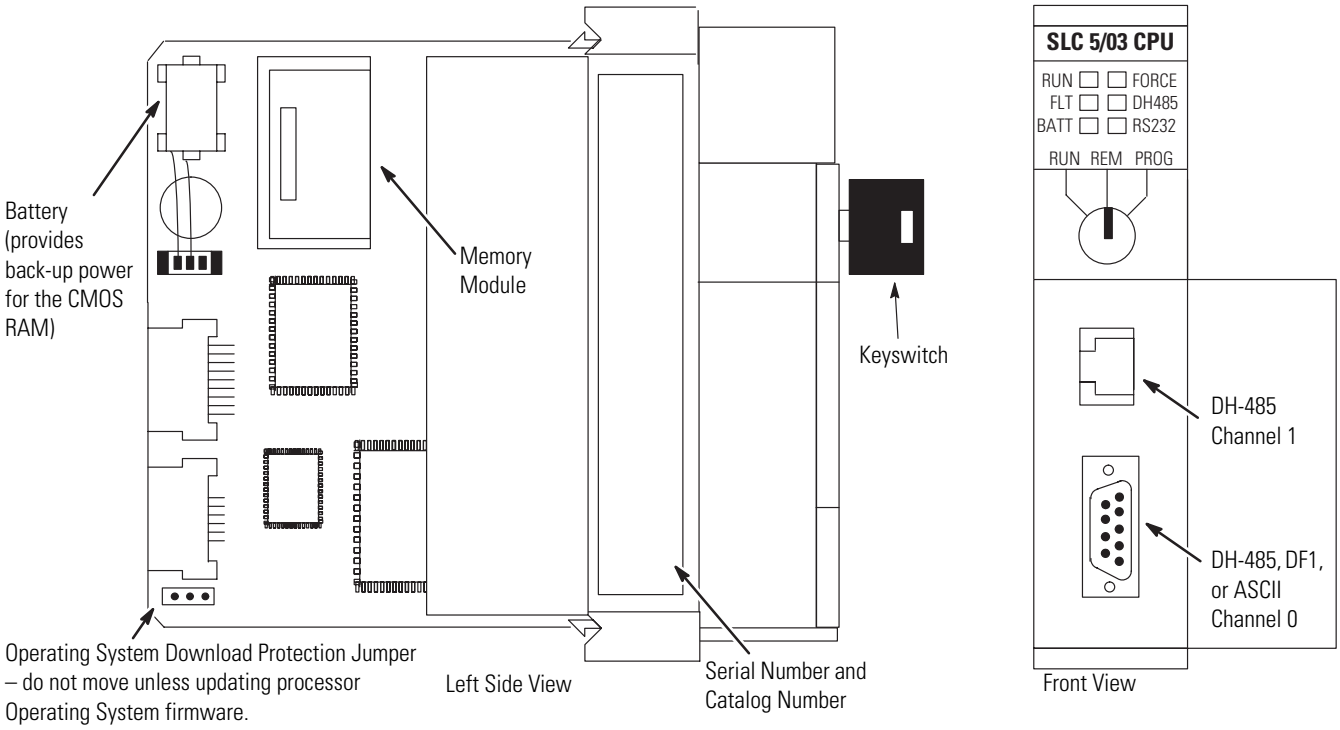

The table below provides a general explanation of each processor status indicator on the SLC 5/03 processor.

SLC 5/03 Status Indicators

Processor Status Indicator(1)(2)	When It Is	Indicates that
RUN (Color: green)	On (steady)	The processor is in the Run mode.
	Flashing (during operation)	The processor is transferring a program from RAM to the memory module.
	Off	The processor is in a mode other than Run.
FLT (Color: red)	Flashing (at power up)	The processor has not been configured.
	Flashing (during operation)	The processor detects a major error either in the processor, chassis or memory.
	On (steady)	A fatal error is present (no communication).
	Off	There are no errors.
BATT (Color: red)	On (steady)	The battery voltage has fallen below a threshold level, or the battery is missing or not connected.
	Off	The battery is functional.

Processor Status Indicator[1][2]	When It Is	Indicates that
FORCE (Color: amber)	Flashing	One or more input or output addresses have been forced to an On or Off state but the forces have not been enabled.
	On (steady)	The forces have been enabled.
	Off	No forces are present or enabled.
DH-485 (Color: green)	On (steady)	The Communication Active bit (S:1/7) is set in the System Status file and the processor is actively communicating on the DH-485 network.
	Flashing	The processor is trying to establish communication, but there are no other active nodes on the DH-485 network.
	Off	A fatal error is present (no communication).
RS-232 (Color: green)	On (flashing) DF1/Modbus RTU Master/ASCII mode	The SLC 5/03 processor is transmitting on the network.
	Off DF1/Modbus RTU Master/ASCII mode	The SLC 5/03 processor is not transmitting on the network.
	On (steady) DH-485 mode	The Communications Active bit (S:33/4) is set in the System Status file and the processor is actively communicating on the DH-485 network.
	Flashing DH-485 mode	The processor is trying to establish communication, but there are no other active nodes on the DH-485 network.
	Off DH-485 mode	A fatal error is present (no communication).

(1) If the status indicators on the SLC 5/03 processor turn on in a predefined sequence, the SLC 5/03 processor is in the process of downloading a new operating system.

(2) See chapter 10 for more information on status indicator status.

SLC 5/04 Processor Hardware Features

The SLC 5/04 processors offer:

- program memory sizes of 16 K, 32 K, or 64 K.
- high-speed performance - 0.90 ms/K typical.
- control of up to 4096 input and output points.
- online programming (includes runtime editing).
- built-in DH+channel, supporting:
  - high-speed communication (57.6 Kbaud, 115.2 Kbaud, and 230.4 Kbaud).
  - messaging capabilities with SLC 500, PLC-2, PLC-5, and ControlLogix processors.
- built-in RS-232 channel, supporting:
  - DF1 full-duplex for point-to-point communication; remotely via a modem, or direct connection to programming or operator interface devices. (Use a 1747-CP3, 1761-CBL-AC00, or 1761-CBL-AC00 cable for direct connection.).
  - DF1 radio modem for radio modem (peer-to-peer) communication.
  - DF1 half-duplex Master/Slave for SCADA type (point-to-multipoint) communication.
  - DH-485 (Use a 1761-NET-AIC with a 1747-CP3 cable to connect to the DH-485 network.).
  - Modbus RTU Master communication with Modbus RTU slave devices.
  - ASCII I/O for connection to other ASCII devices, such as bar code readers, serial printers, and weigh scales.
- channel-to-channel passthru (DH+ to DF1 full-duplex, DF1 half-duplex Master, DF1 radio modem, or DH-485).
- remote I/O passthru.
- DeviceNet passthru.
- built-in real-time clock/calendar.
- 1 ms Selectable Timed Interrupt (STI).
- 0.50 ms Discrete Input Interrupt (DII).
- advanced math features - trigonometric, PID, exponential, floating point, and the compute instruction.
- indirect addressing.
- logical ASCII addressing in PLC-5 type messages.
- flash PROM provides firmware upgrades without physically changing EPROMS.
- optional flash EPROM memory module available.
- keyswitch - RUN, REMote, PROGram (clear faults).
- battery-backed RAM.
- additional instructions such as swap and scale with parameters.

- multi-point list.
- UL listed to US and Canadian Safety Standards, CE compliant, C-Tick marked.

This figure below shows some of the hardware components of the SLC 5/04 processors (1747-L541, 1747-L542, or 1747-L543).

SLC 5/04 Hardware Components

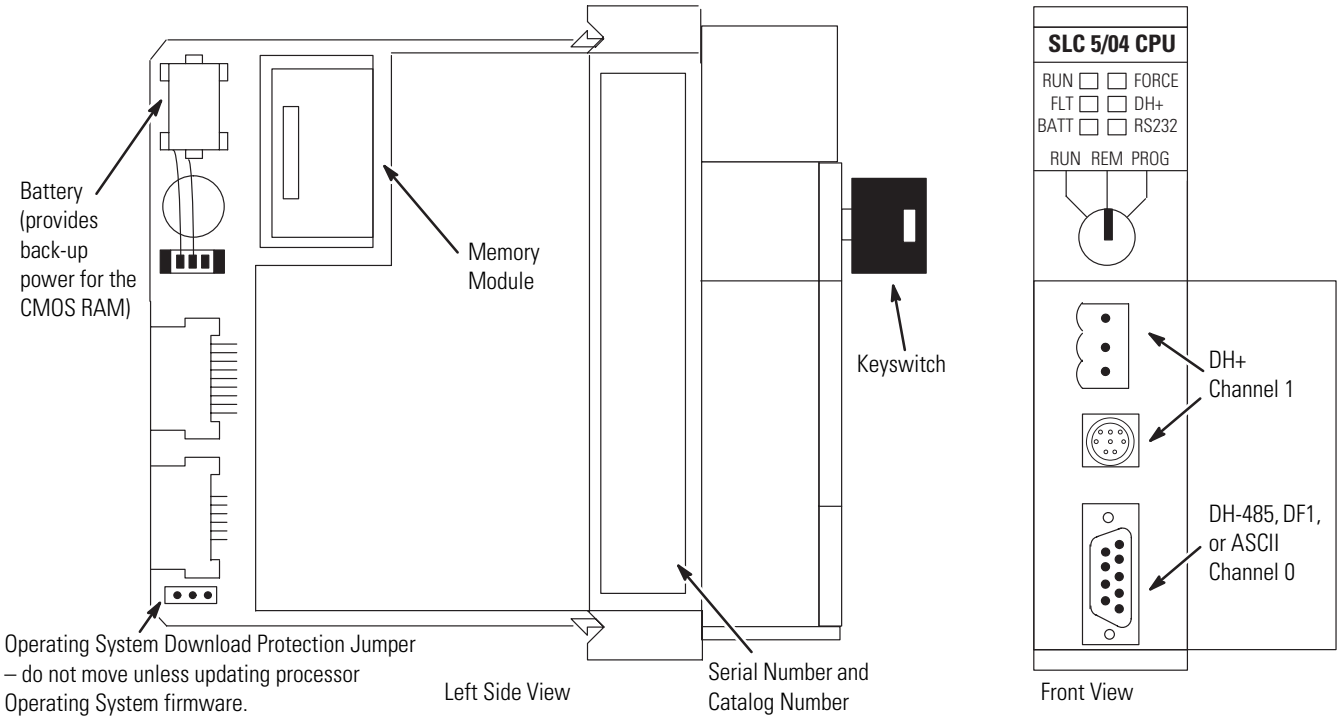

The table below provides a general explanation of each processor status indicator on the SLC 5/04 processors.

SLC 5/04 Status Indicators

Processor Status Indicator[1][2]	When It Is	Indicates that
RUN (Color: green)	On (steady)	The processor is in the Run mode.
	Flashing (during operation)	The processor is transferring a program from RAM to the memory module.
	Off	The processor is in a mode other than Run.
FLT (Color: red)	Flashing (at power up)	The processor has not been configured.
	Flashing (during operation)	The processor detects a major error either in the processor, chassis, or memory.
	On (steady)	A fatal error is present (no communication).
	Off	There are no errors.

Processor Status Indicator[1][2]	When It Is	Indicates that
BATT (Color: red)	On (steady)	The battery voltage has fallen below a threshold level, or the battery is missing or not connected.
	Off	The battery is functional.
FORCE (Color: amber)	Flashing	One or more input or output addresses have been forced to an On or Off state but the forces have not been enabled.
	On (steady)	The forces have been enabled.
	Off	No forces are present or enabled.
DH+ (Color: green or red)	On (steady)	The Communications Active bit (S:1/7) is set in the System Status file and the processor is actively communicating on the DH+ network.
	Flashing green	The processor is trying to establish communication, but there are no other active nodes on the DH+ network.
	Flashing red	There are duplicate nodes on the link with the same node address.
RS-232 (Color: green)	On (steady) DF1/Modbus RTU Master/ASCII mode	The SLC 5/04 processor is transmitting on the network.
	Off DF1/Modbus RTU Master/ASCII mode	The SLC 5/04 processor is not transmitting on the network.
	On (steady) DH-485 mode	The Communications Active bit (S:33/4) is set in the System Status file and the processor is actively communicating on the DH-485 network.
	Flashing DH-485 mode	The processor is trying to establish communication, but there are no other active nodes on the DH-485 network.
	Off DH-485 mode	A fatal error is present (no communication).

(1) If the status indicators on the SLC 5/04 processor turn on in a predefined sequence, the SLC 5/04 processor is in the process of downloading a new operating system.

(2) See chapter 10 for more information on status indicator status.

SLC 5/05 Processor Hardware Features

The SLC 5/05 processors offer:

- program memory sizes of 16 K, 32 K, or 64 K.
- high-speed performance - 0.90 ms/K typical.
- control of up to 4096 input and output points.
- online programming (includes runtime editing).
- built-in 10/100Base-T Ethernet channel, supporting:
  - high-speed computer communication using TCP/IP.
  - messaging capabilities with SLC 5/05, PLC-5, and ControlLogix processors on Ethernet.
  - SNMP for standard Ethernet network management.
  - BOOTP for optional dynamic IP address assignment.
- built-in RS-232 channel, supporting:
  - DF1 full-duplex for point-to-point communication; remotely via a modem, or direct connection to programming or operator interface devices. (Use a 1747-CP3, 1761-CBL-AC00, or 1761-CBL-AP00 cable for direct connection.).
  - DF1 radio modem for radio modem (peer-to-peer) communication.
  - DF1 half-duplex master/slave for SCADA type (point-to-multipoint) communication.
  - DH-485 (Use a 1761-NET-AIC with a 1747-CP3 cable to connect to the DH-485 network.).
  - Modbus RTU Master communication with Modbus RTU slave devices.
  - ASCII I/O for connection to other ASCII devices, such as bar code readers, serial printers, and weigh scales.
- Channel-to-channel passthru (Ethernet to DF1 full-duplex, DF1 half-duplex Master, DF1 radio modem, or DH-485).
- remote I/O and DeviceNet passthru.
- built-in real-time clock/calendar.
- 1 ms Selectable Timed Interrupt (STI).
- 0.50 ms Discrete Input Interrupt (DII).
- advanced math features - trigonometric, PID, exponential, floating point, and the compute instruction.
- indirect addressing.
- logical ASCII addressing in PLC-5 type messages.
- flash PROM provides firmware upgrades without physically changing EPROMS through the Ethernet port.
- optional flash EPROM memory module available.
- keyswitch - RUN, REMote, PROGram (clear faults).
- battery-backed RAM.
- additional instructions such as swap and scale with parameters

- multi-point list.
- UL listed to US and Canadian Safety Standards, CE compliant, C-Tick marked.

The figure below shows some of the hardware components of the SLC 5/05 processors (1747-L551, 1747-L552, and 1747-L553).

SLC 5/05 Hardware Components

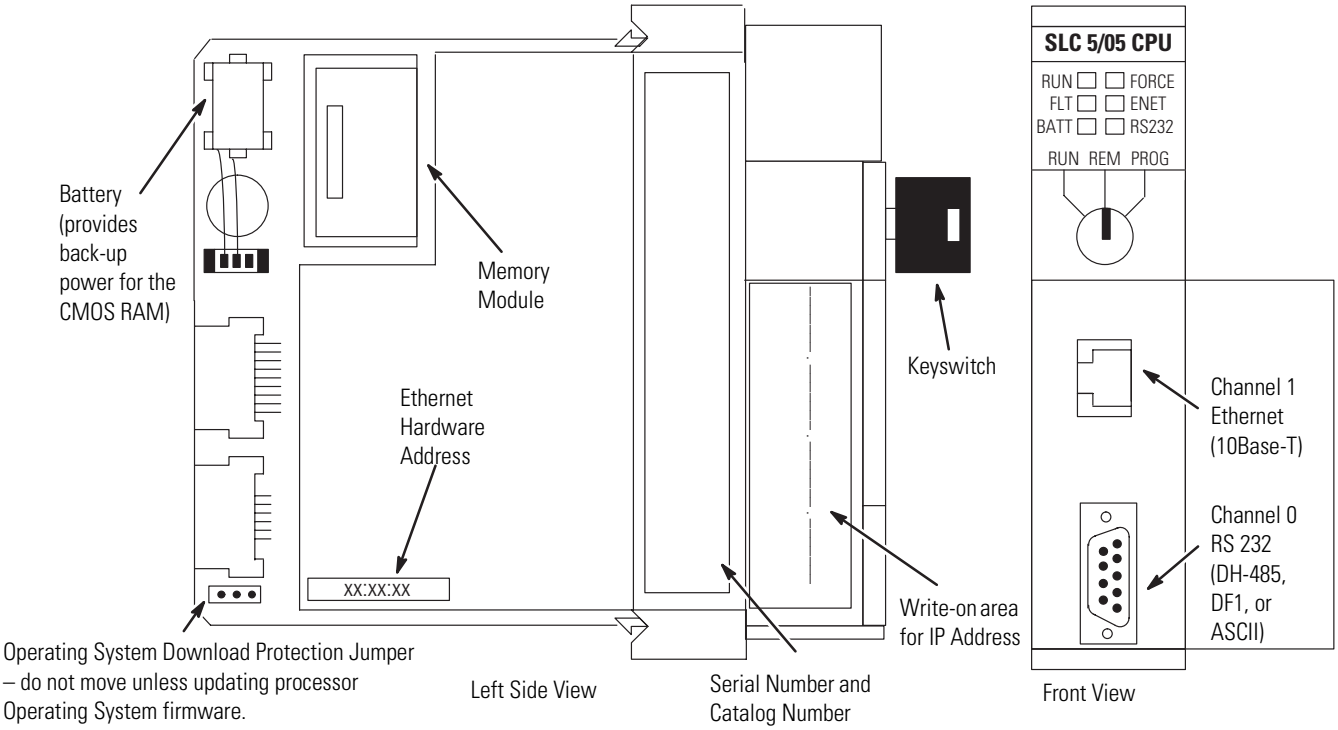

The table below provides a general explanation of the processor status indicators.

SLC 5/05 Status Indicators

Processor Status Indicator	When It Is	Indicates that
RUN (Color: green)	On (steady)	The processor is in the Run mode.
	Flashing (during operation)	The processor is transferring a program from RAM to the memory module.
	Off	The processor is in a mode other than Run.
FLT (Color: red)	Flashing (at power up)	The processor has not been configured.
	Flashing (during operation)	The processor detects a major error either in the processor, chassis, or memory.
	On (steady)	A fatal error is present (no communication).
	Off	There are no errors.

Processor Status Indicator	When It Is	Indicates that
BATT (Color: red)	On (steady)	The battery voltage has fallen below a threshold level, or the battery is missing or not connected.
	Off	The battery is functional.
FORCE (Color: amber)	Flashing	One or more input or output addresses have been forced to an On or Off state but the forces have not been enabled.
	On (steady)	The forces have been enabled.
	Off	No forces are present or enabled.
ENET Channel 1 (Color: green or red)	Solid green	The Ethernet port is functioning properly and is connected to an active Ethernet network.
	Flashing green	The Ethernet port is functioning properly, connected to an active Ethernet network, and is transmitting packets.
	Flashing red	A hardware or software fault has occurred and is being reported via a code. Contact Allen-Bradley for assistance.
	Off	No Ethernet connection or processor halted.
RS-232 Channel 0 (Color: green)	On (steady) DF1/Modbus RTU Master/ASCII mode	The SLC 5/05 processor is transmitting on the network.
	Off DF1/Modbus RTU Master/ASCII mode	The SLC 5/05 processor is not transmitting on the network.
	On (steady) DH-485 mode	The Channel 0 Communications Active bit (S:33/4) is set in the System Status file and the processor is actively communicating on the network.
	Flashing DH-485 mode	The processor is trying to establish communication, but there are no other active nodes on the DH-485 network.
	Off DH-485 mode	A fatal error is present (no communication).

Keyswitch for the SLC 5/03, SLC 5/04, and SLC 5/05 Processors

The SLC 5/03, SLC 5/04, and SLC 5/05 processors include a 3-position keyswitch on the front panel that lets you select one of three modes of operation: RUN, PROGram, and REMote. You can remove the key in each of the three positions.

ATTENTION

Depending on the size of your user program, the processor can take up to 2.5 s to change modes when you change the position of the keyswitch from RUN to PROG or to REM. Do not use the keyswitch in place of a hardwired master control relay or an emergency-stop switch.

IMPORTANT

The SLC 5/01 and SLC 5/02 processors do not have a keyswitch. Therefore, all modes must be changed via the communication channels.

RUN Position

This position places the processor in the Run mode. The processor scans/executes the ladder program, monitors input devices, energizes output devices, and acts on enabled I/O forces. You can only change the processor mode by changing the keyswitch position. You cannot perform online program editing.

To change the processor mode to Run, toggle the keyswitch from PROG or REM to RUN. When the keyswitch is left in the RUN position, you cannot use a programmer/operator interface device to change the processor mode.

PROG Position

This position places the processor in the Program mode. The processor does not scan/execute the ladder program, and the controller outputs are de-energized. You can perform online program editing. You can only change the processor mode by changing the keyswitch position.

To change the processor mode to Program, toggle the keyswitch from REM or RUN to PROG. When the keyswitch is left in the PROG position, you cannot use a programmer/operator interface device to change the processor mode.

REM Position

This position places the processor in the Remote mode: either the REMote Run, REMote Program, or REMote Test mode. You can change the processor mode by changing the keyswitch position or by changing the mode from a programmer/operator interface device. You can perform online program editing in this position.

To change the processor mode to REM, toggle the keyswitch from RUN or PROG to REM. When the keyswitch is in the REM position, you can use a programmer/operator interface device to change the processor mode.

Installing Your Hardware Components

This chapter shows you how to install the following hardware components:

- Chassis
- Processor
- Modules
- Memory module
- Power supply
- Chassis interconnect cable

Compliance to European Union Directives

This product is approved for installation within the European Union and EEA regions. It has been designed and tested to meet the following directives.

EMC Directive

The analog modules are tested to meet Council Directive 89/336/EEC Electromagnetic Compatibility (EMC) and the following standards, in whole or in part, documented in a technical construction file:

- EN 50081-2
  EMC – Generic Emission Standard, Part 2 - Industrial Environment

- EN 50082-2
  EMC – Generic Immunity Standard, Part 2 - Industrial Environment

This product is intended for use in an industrial environment.

Low Voltage Directive

This product is tested to meet Council Directive 73/23/EEC Low Voltage, by applying the safety requirements of EN 61131-2 Programmable Controllers, Part 2 – Equipment Requirements and Tests.

For specific information required by EN61131-2, see the appropriate sections in this publication, as well as the industrial Automation, Wiring and Grounding Guidelines for Noise Immunity, publication 1770-4.1.

Install Your Chassis

The power supply support panel (left end panel) has screws as indicated in the following illustration. The center and right end panels are held in position by a molded latch and do not require screws.

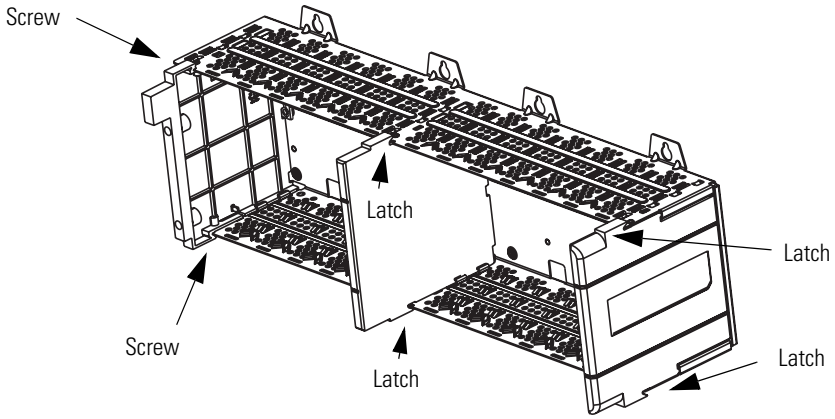

Perform this procedure to install your chassis.

1. Drill holes in the back panel of the enclosure for chassis mounting tabs.

ATTENTION

Be careful of metal chips when drilling mounting holes for the SLC chassis. Do not drill holes above an SLC chassis if a processor and I/O modules are installed.

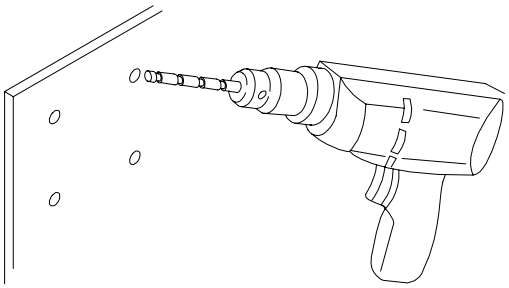

2. Install the hardware for the top mounting tabs.

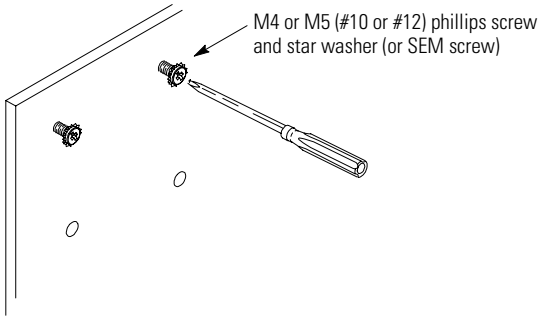

TIP Scrape paint off the back panel for an electrical connection between the chassis and back panel.

3. Slide the chassis over the installed hardware and tighten the screws.

ATTENTION If the chassis mounting tabs do not lay flat before the screws are tightened, use additional washers as shims so the chassis will not warp when tightening the screws. Warping the chassis could damage the backplane and cause poor connections.

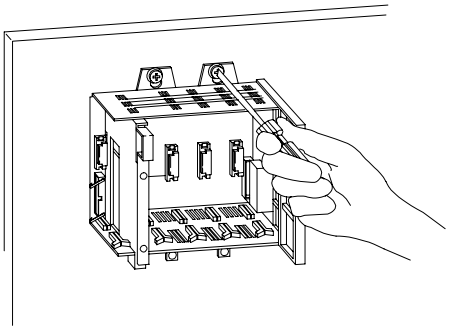

4. Leaving far-left and far-right tabs open for grounding, install the remaining tab hardware (for a four-slot chassis, leave both tabs open).

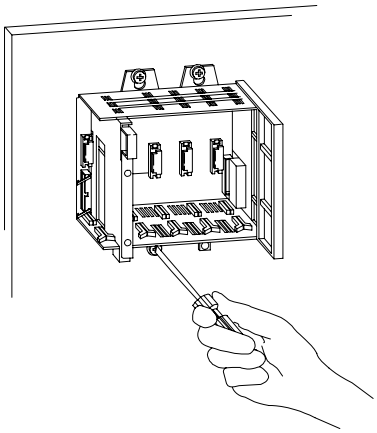

Installing Your Processor

The processor always occupies the first slot of the first chassis. You can only install one processor per system.

ATTENTION

Never install, remove, or wire any module while power is applied. Also, do not expose processor modules to surfaces or other areas that may typically hold an electrostatic charge.

Electrostatic discharge can damage integrated circuits or semiconductors if you touch backplane connector pins. Follow these guidelines when you handle the power supplies.

- Touch a grounded object to discharge static potential.
- Do not touch the backplane connector or connector pins.
- Do not touch circuit components inside the power supply.
- Use a static-safe work station if available.
- Keep the power supplies in their static-shield packaging when not in use.

IMPORTANT

If the equipment is not installed and used as described in this manual, the protection provided by the equipment may be impaired.

IMPORTANT

If your processor has a battery — the battery is an option for the SLC 5/01 (1747-L511) processor — make sure it is connected before installing your processor into the chassis. This provides memory backup for your processor should the controller power supply fail.

Install Modules

Follow the steps below to install your modules.

1. Align the circuit board of the module with the card guide in the chassis.

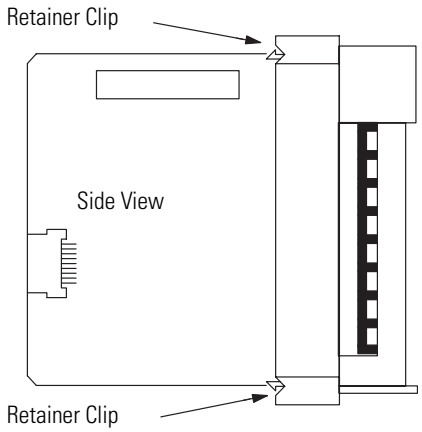

2. Gently slide the module in until both top and bottom retainer clips are secured.

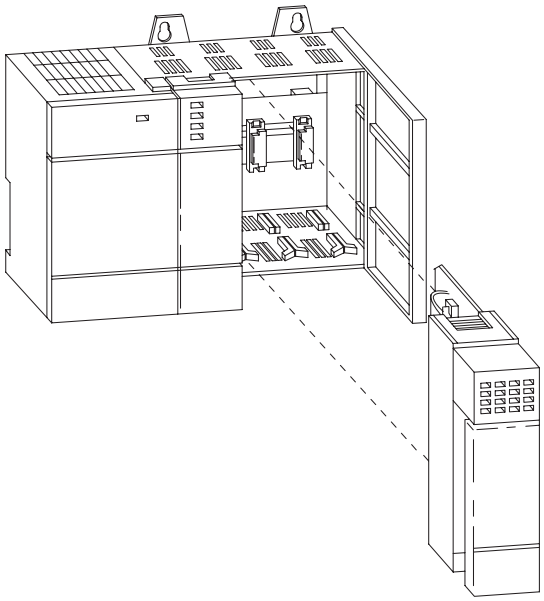

3. Install a wire tie to secure your wiring and keep it neat. (If you feed the tie into one hole, it will be routed back out through the other.)

4. Cover any unused slots with card slot fillers (catalog number 1746-N2) to keep the chassis free from debris and dust.

5. To remove the module, press the retaining clips at the top and bottom of the module and slide the module out.

Install Your Memory Module

Always turn off power to the controller before removing the processor or inserting or removing the memory module. This guards against possible damage to the module and also undesired processor faults. Memory modules are mounted in carriers or have connectors that are keyed to guard against improper installation.

ATTENTION

To avoid potential damage to the memory modules, handle them by the ends of the carrier or edges of the plastic housing. Skin oil and dirt can corrode metallic surfaces, inhibiting electrical contact. Also, do not expose memory modules to surfaces or areas that may typically hold an electrostatic charge. Electrostatic charges can alter or destroy memory.

1. If the processor module is installed in the chassis, remove the module by pressing the retainer clips at both the top and bottom of the module and sliding it out.

2. Locate the socket (or connector if you have an SLC 5/03, SLC 5/04, or SLC 5/05 processor) on the processor board. Then place the memory module into the socket or onto the connector and press firmly in place.

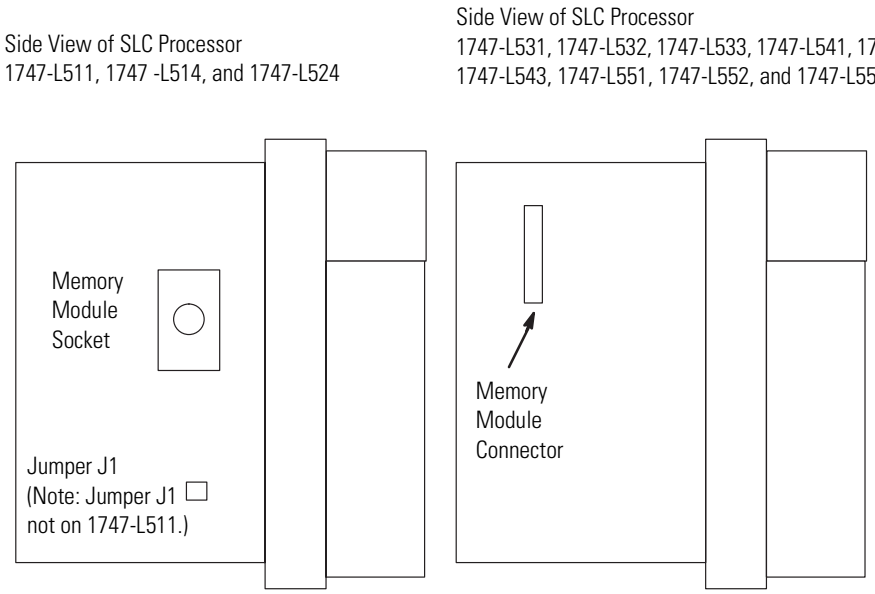

3. Place jumper J1 as shown below.

Processor Type	1747-M1, -M2, -M3	1747-M4	Invalid Settings
1747-L514, 1747-L524	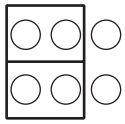	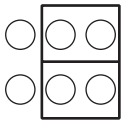	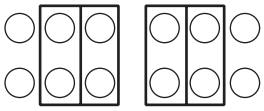
1747-L511, 1747-L531, 1747-L532, 1747-I533, 1747-L541, 1747-L542, 1747-L543, 1747-L551, 1747-L552, 1747-L553	No Jumper J1	No Jumper J1	No Jumper J1

4. Install the processor module into the chassis.

5. Restore power to the controller.

Remove the Memory Module

Follow this procedure to remove the memory module.

1. Remove power and pull out the processor.

2. Grasp the carrier tabs (or connector for the SLC 5/03, SLC 5/04, and SLC 5/05 processor) with your thumb and index fingers, then gently but firmly lift upwards on either end of the memory module carrier.

3. When the end is partially raised, begin lifting the other end in the same manner. Repeat this until the memory module has been completely removed from the socket.

Install Your Power Supply

If you have multiple chassis configurations, install the chassis interconnect cable before installing the power supply.

See Install Your Chassis Interconnect Cable on page 108.

Also, the power supply terminals accept two 2 mm^2 (#14 AWG) wires and are marked as shown in the figure on page 106.

Perform this procedure to install the power supply.

1. Align the circuit board with the card guide on the left side of the chassis. Slide the power supply in until it is flush with the chassis.

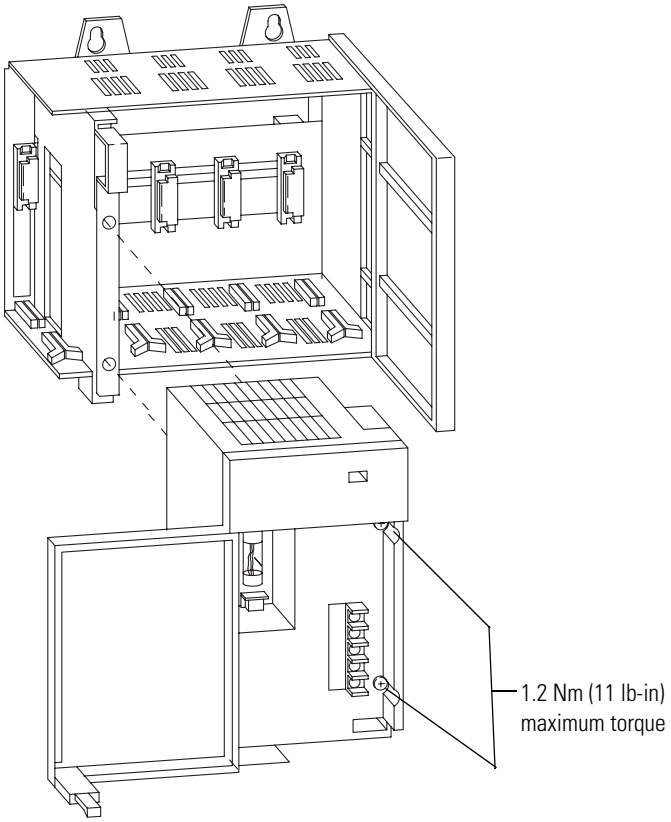

2. Fasten the power supply to the chassis with the two Phillips head screws.

3. Place the jumper to match the input voltage. (This does not apply to 1746-P3, 1746-P5, 1746-P6, or 1746-P7 power supply which do not have a jumper.)

ATTENTION

Make jumper selection before applying power. Hazardous voltage is present on exposed pins when power is applied.

ATTENTION

If you connect or disconnect the wiring to the terminal blocks or if you insert or remove the power supply while the power is on, an electrical arc can occur. This could cause an explosion in hazardous location installations. Be sure that power is removed or the area is nonhazardous. Failure to remove power could cause injury to personnel and/or equipment.

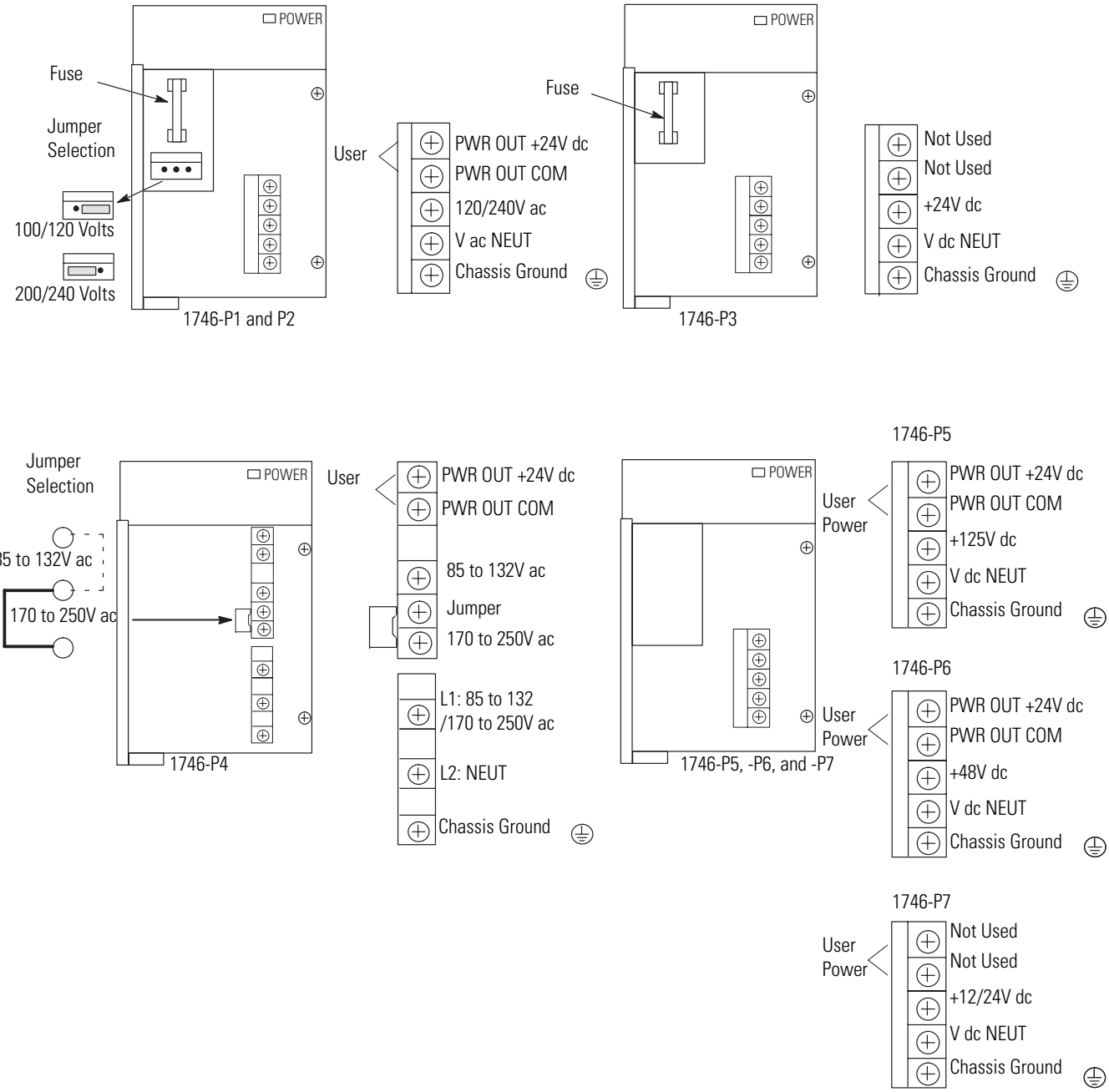

IMPORTANT

Terminal screws on the 1746-P1, 1746-P2, 1746-P3, 1746-P5, 1746-P6, and 1746-P7 power supply should be tightened with a maximum torque of 1 Nm (8.8 lb-in).

Terminal screws on the 1746-P4 power supply should be tightened with a max torque of 0.8 Nm (7 lb-in).

4. Connect the ground screw of the power supply to the nearest ground or ground bus. Use a #14 AWG 75 Deg. Copper wire (Category 1 per Industrial Automation Wiring and Grounding Guidelines, publication 1770-4.1) and keep the leads as short as possible. The 1746-P4 is shown below.

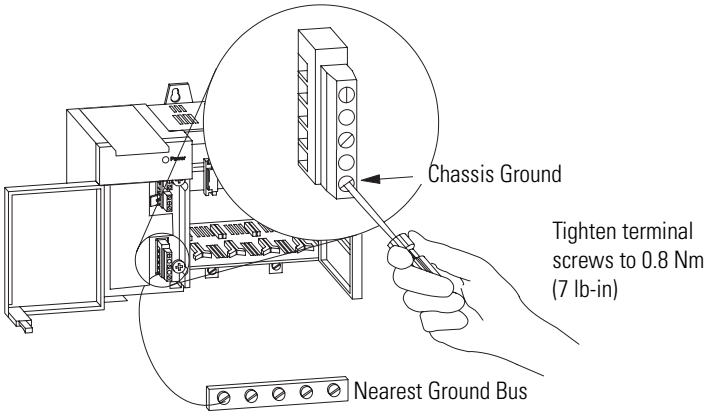

5. Remove the warning label from the top of the power supply.

6. Connect line power to the power supply.

ATTENTION

If you have a 1746-P3 power supply, see page 64 for special grounding considerations.

ATTENTION

Your SLC 500 power supply can be damaged by voltage surges when switching inductive loads such as motors, motor starters, solenoids, and relays. To avoid damage to your SLC 500 power supply in these applications, use an isolation transformer to isolate the power supply from harmful voltage surges.

For the 1746-P1, 1746-P2, 1746-P4, 1746-P5, and 1746-P6 power supplies, use PWR OUT +24V dc and PWR OUT COM terminals to

power 24V dc sensors and loads. The terminals on the 1746-P1, 1746-P2, 1746-P5, and 1746-P6 power supply provide an isolated, nonfused 200 mA, 24V dc power supply. The terminals on the 1746-P4 power supply provide an isolated, nonfused 1 A, 24V dc power supply. (The 1746-P3 and 1746-P7 power supplies do not provide for an external power source.)

Install Your Chassis Interconnect Cable

Three cables are available to link modular hardware chassis. Catalog number 1746-C7 cable is 152.4 mm (6 in.) in length and is used when connecting chassis side-by-side. Catalog number 1746-C9 is 914.4 mm (36 in.) in length and 1746-C16 is 1.27 m (50 in.) in length and are used to link one chassis below the other.

IMPORTANT 1746-C9 and 1746-C16 cables have a rigid, unbendable shrink wrap applied at the end of each connector, which provides strain relief. When using these cables, provide at least 101.6 mm (4 in.) of clearance at the side of the chassis to allow for proper bend radius of the cable.

.

ATTENTION Do not use any cables other than those provided. Longer cables could affect the integrity of data communication between the chassis, possibly causing unsafe operation. Also, make sure the cable is properly secured to protect against the effects of shock and vibration.

In multiple chassis configurations, install the chassis interconnect cable before installing the power supply.

The cables are keyed for proper installation. The end of the cable that plugs into the right socket in the chassis has the key on the top of the connector. The opposite end of the cable has the key on the inside of the connector for insertion into the expansion chassis.

Chassis Connections

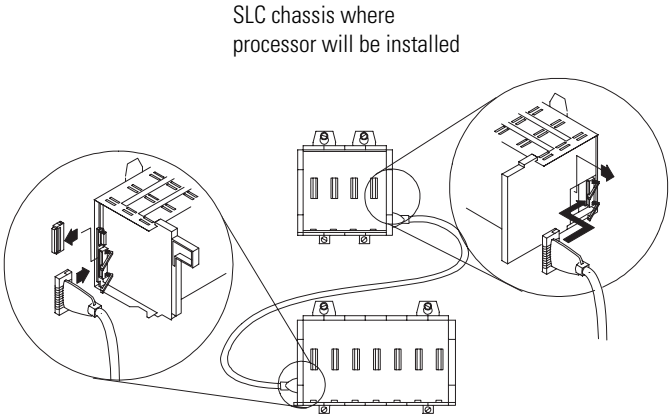

To remove the cable, move the tabs on the socket outward and the connector pops out.

ATTENTION

The expansion cable must always exit the right end of the chassis with the processor and connect to the left end of the next I/O chassis.

Notes:

Wiring Your I/O Modules

This chapter describes how to wire your I/O modules. It covers the following:

- Defining sinking and sourcing
- Preparing your wiring layout
- Features of an I/O module
- Recommendations for wiring I/O devices
- Wiring your I/O modules
- Octal label kit installation
- Using removable terminal blocks

Defining Sinking and Sourcing

Sinking and sourcing are terms used to describe a current signal flow relationship between field input and output devices in a control system and their power supply.

- Field devices connected to the positive side (+V) of the field power supply are sourcing field devices.
- Field devices connected to the negative side (dc Common) of the field power supply are called sinking field devices.

To maintain electrical compatibility between field devices and the programmable controller system, this definition is extended to the input/output circuits on the discrete I/O modules.

- Sourcing I/O circuits supply (source) current to sinking field devices.
- Sinking I/O circuits receive (sink) current from sourcing field devices.

Europe: dc sinking input and sourcing output module circuits are the commonly used options.

Contact Output Circuits — ac or dc

Relays can be used for either ac or dc output circuits and accommodate either sinking or sourcing field devices. These capabilities are a result of the output switch being a mechanical contact closure, not sensitive to current flow direction and capable of accommodating a broad range of voltages.

This high degree of application flexibility makes contact output modules very popular and useful in control environments with a broad mix of electrical I/O circuit requirements.

Solid-State dc I/O Circuits

The design of dc field devices typically requires that they be used in a specific sinking or sourcing circuit depending on the internal circuitry of the device. DC input and output field circuits are commonly used with field devices that have some form of internal solid state circuitry that need a dc signal voltage to function.

Sourcing Device with Sinking Input Module Circuit

The field device is on the positive side of the power supply between the supply and the input terminal. When the field device is activated, it sources current to the input circuit.

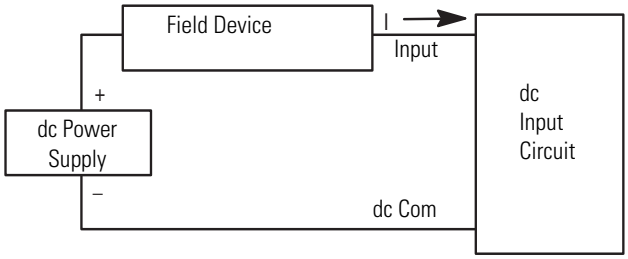

Sinking Device with Sourcing Input Module Circuit

The field device is on the negative side of the power supply between the supply and the input terminal. When the field device is activated, it sinks current from the input circuit.

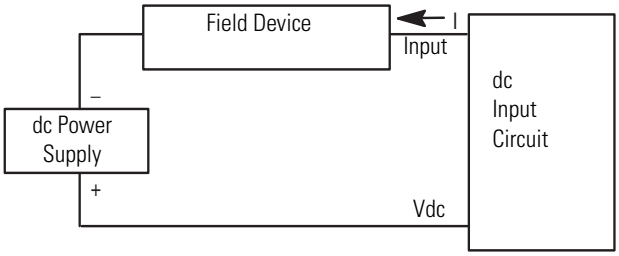

Sinking Device with Sourcing Output Module Circuit

The field device is on the negative side of the power supply between the supply and the output terminal. When the output is activated, it sources current to the field device.

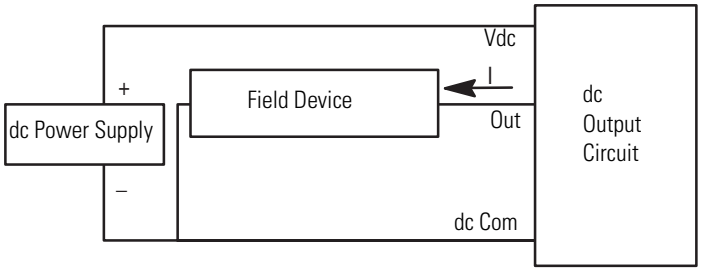

Sourcing Device with Sinking Output Module Circuit

The field device is on the positive side of the power supply between the supply and the output terminal. When the output is activated, it sinks current from the field device.

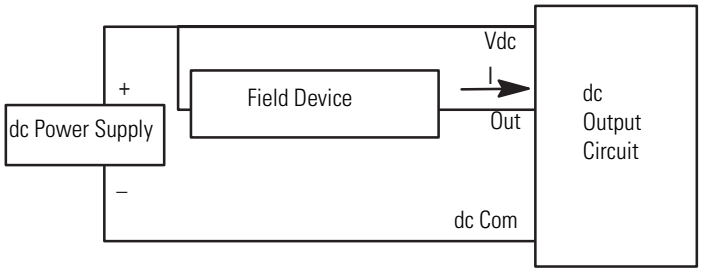

Preparing Your Wiring Layout

Careful wire routing within the enclosure helps to cut down electrical noise between I/O lines. Follow these rules for routing your wires.

- Route incoming power to the controller by a separate path from wiring to I/O devices. Where paths must cross, their intersection should be perpendicular.

IMPORTANT Do not run signal or communication wiring and power wiring in the same conduit.

- If wiring ducts are used, allow for at least 50.8 mm (2 in.) between I/O wiring ducts and the controller. If the terminal strips are used for I/O wiring, allow for at least two inches between the terminal strips and the controller.
- Limit the cable length for the TTL input module to 15.24 m (50 ft) per point and 3.05 m (10 ft) per point for the TTL output module. Use low power dc I/O wiring even though it is less tolerant to electrical noise.

ATTENTION Handle the TTL module by its ends, not metallic surfaces. Electrostatic discharges can damage the module. Do not expose the TTL module to electrostatic charges.

- Segregate I/O wiring by signal type. Bundle wiring with similar electrical characteristics together.

Wires with different signal characteristics should be routed into the enclosure by separate paths. Refer to Allen-Bradley Programmable Controller Grounding and Wiring Guidelines, publication 1770-4.1.

ATTENTION If the controller is being installed within a potentially hazardous environment (that is, Class I, Division 2), all wiring must comply with the requirements stated in the National Electrical Code 501-4 (b).

Recommendations for Wiring I/O Devices

The following are general recommendations for wiring I/O devices.

ATTENTION

Before you install and wire I/O devices, disconnect power from the controller and any other source to the I/O devices.

- Use acceptable wire gauge. The I/O wiring terminals are designed to accept two wires per terminal (maximum) of the following size wire:
  - *Europe:* 2 mm^2 cross section or smaller
  - *United States:* 14 AWG or smaller stranded wires
- See diagram on page 116 for maximum torque values for wiring terminal screws and terminal block screws.
- Label wiring to I/O devices, power sources, and ground. Use tape, shrink-tubing, or other dependable means for labeling purposes. In addition to labeling, use colored insulation to identify wiring based on signal characteristics. For example, you may use blue for dc I/O wiring and red for ac I/O wiring.
- Route the wires down and away from the module, securing them with the cable tie.
- Bundle wiring for each similar I/O device together. If you use ducts, allow at least 5 cm (2 in.) between the ducts and the controller so there is sufficient room to wire the devices.
- Terminal cover plates have a write-on area for each terminal. Use this area to identify your I/O devices. Label the removable terminal block if you have not already.

ATTENTION

Calculate the maximum possible current in each power and common wire. Observe all local electrical codes dictating the maximum current allowable for each wire size. Current above the maximum ratings may cause wiring to overheat, which can cause damage.

Capacitors on input modules have a stored charge that can cause a non-lethal shock. Avoid mounting the controller in a position where installation or service personnel would be in danger from startle reaction.

Features of an I/O Module

Below is an example of a combination I/O module.

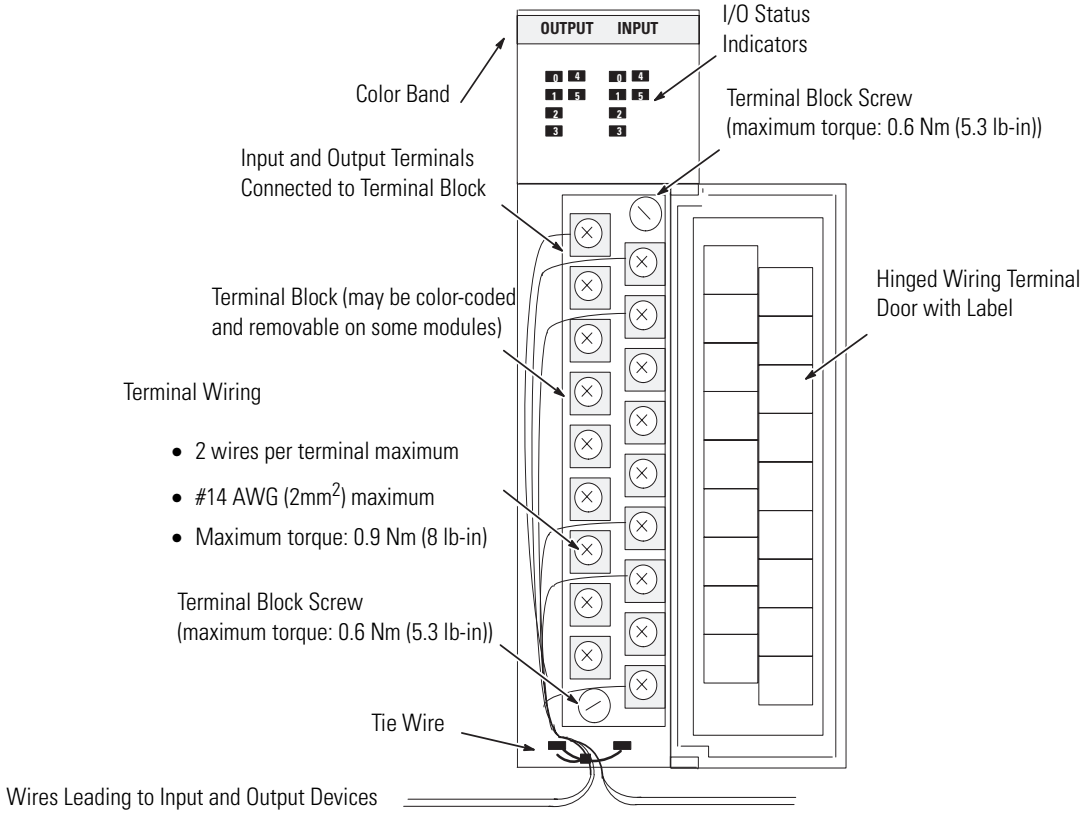

Wiring Your I/O Module

Terminals on the modules have self-lifting pressure plates that accept two 2 mm^2 (14 AWG) wires. Series B 12-point and 16-point and analog modules are equipped with removable terminal blocks for ease of wiring. The plug for the removable terminals is also color coded:

- red (ac)
- blue (dc)
- orange (relay)
- green (specialty).

Status indicators on the front of each module display the status of each I/O point. The status indicators illuminate when the proper signal to an input terminal is applied or when the processor commands an output to be energized.

To locate the I/O module wiring diagrams, contact your Rockwell Automation sales office for the latest selection guide, publication 1747-SG001. Or, locate the installation instruction sheet that was sent with your I/O module. It also includes I/O wiring diagrams.

1. Install a tie wire to secure your wiring and keep it neat. (If you feed the tie into one hole, it is routed back out through the other.)

2. Cover any unused slots with card slot fillers (catalog number 1746-N2) to keep the chassis free from debris and dust.

Octal Label Kit Installation

The octal label kit consists of an octal filter label and a door label. Use these octal labels to replace the decimal labels that are attached to the I/O modules. The kits can be obtained through your Allen-Bradley distributor. (The octal label kit is applicable when using 1746 I/O with PLC-5 processors via a 1747-ASB Remote I/O Adapter.)

Apply the Octal Filter Label

1. Remove the octal filter label from its paper carrier.

2. Align the octal filter label numbers horizontally to the module color bar and over the decimal filter numbers, as shown in the illustration below.

3. Apply the octal label to the filter.

4. Press firmly to ensure proper adhesion of the label.

Apply the Octal Door Label

1. Remove the octal door label from its paper carrier.

2. Align it over the decimal door label on the inside of the door.

3. Press firmly to ensure proper adhesion of the label.

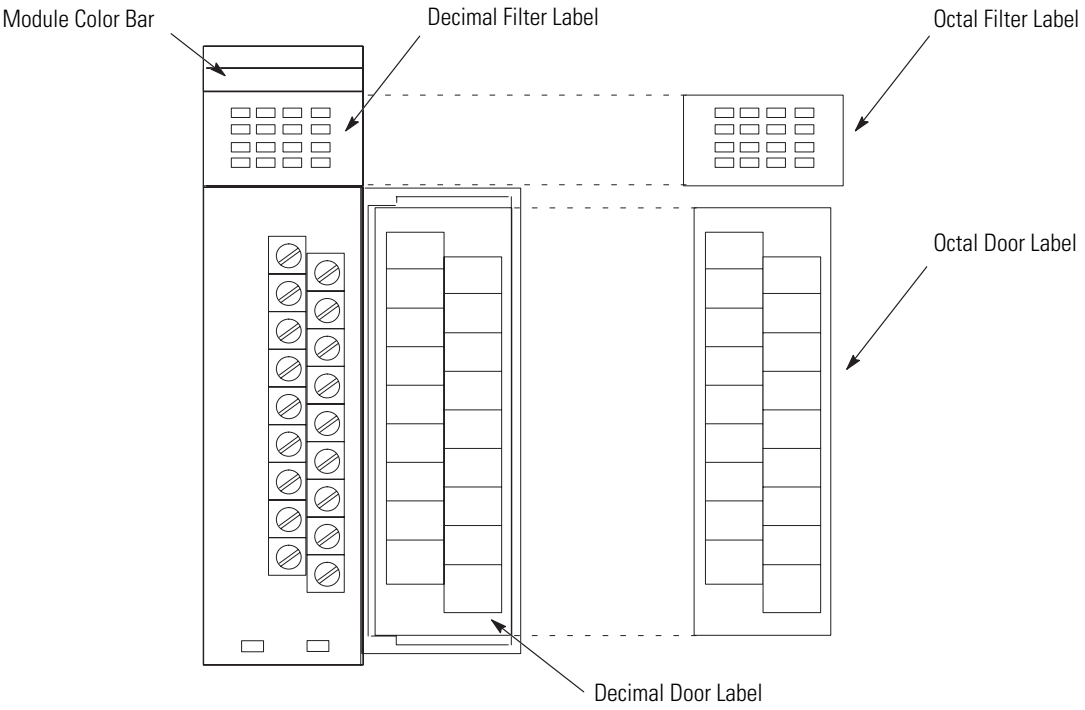

Octal Kit and I/O Module Information

I/O Module Cat. No.	Octal Kit Cat. No.	I/O Module Cat. No.	Octal Kit Cat. No.
1746-IA16	1746-RL40	1746-OV16	1746-RL53
1746-IB16	1746-RL41	1746-OW16	1746-RL54
1746-IG16	1746-RL42	1746-OBP16	1746-RL55
1746-IM16	1746-RL43	1746-OVP16	1746-RL56
1746-IN16	1746-RL44	1746-OAP12	1746-RL57
1746-IV16	1746-RL45	1746-IC16	1746-RL58
1746-ITB16	1746-RL46	1746-IH16	1746-RL59
1746-ITV16	1746-RL47	1746-IB32	1746-RL60
1746-OA16	1746-RL50	1746-IV32	1746-RL61
1746-OB16	1746-RL51	1746-OB32 1746-OB32E	1746-RL70
1746-OG16	1746-RL52	1746-OV32	1746-RL71
		1746-OB16E	1746-RL72

Using the Removable Terminal Block (RTB)

The Removable Terminal Block (RTB) is provided on all 12-point and 16-point discrete I/O modules and analog modules. They allow for faster and more convenient wiring of the I/O modules. The modules and the RTB are color-coded.

Color	Type of I/O Removable Terminal Block
Red	ac inputs/outputs
Blue	dc inputs/outputs
Orange	relay outputs
Green	specialty modules

Replacement terminal blocks are available if they are lost or damaged. See the replacement part list in chapter 11.

Remove the RTB

Below are guidelines for removing the I/O Removable Terminal Block.

ATTENTION

Never install or remove I/O modules or terminal blocks while the SLC chassis is powered.

1. If the I/O module is already installed in the chassis, remove power to the SLC chassis.
2. Unscrew the upper right and lower left terminal block release screws.
3. Grasp the RTB with your thumb and forefinger and pull straight out.
4. Label the RTB with appropriate slot, chassis, and module identification.

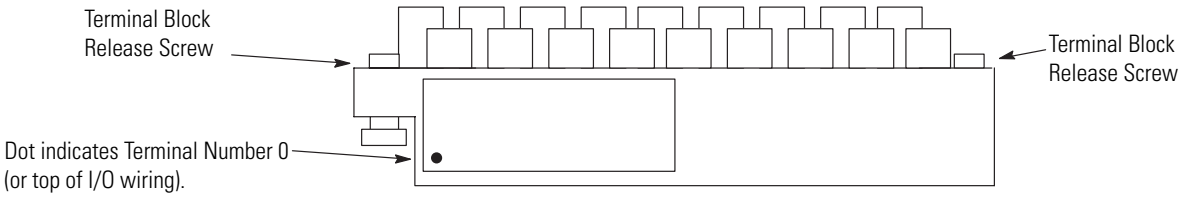

Install the RTB

Below are guidelines for installing the RTB.

1. Be sure the color of the RTB matches the color band on the module.

ATTENTION

Inserting a wired RTB on an incorrect module can damage the module circuitry when power is applied.

2. Write the appropriate slot, chassis, and module type on the RTB label.

ATTENTION

Disconnect power before attempting to install or remove I/O modules or their terminal blocks.

3. Disconnect power.
4. Align the terminal block release screws with the mating connector in the module.
5. Press the RTB firmly onto the connector contacts.
6. Tighten the terminal block release screws. To avoid cracking the terminal block, alternate the tightening of the screws.

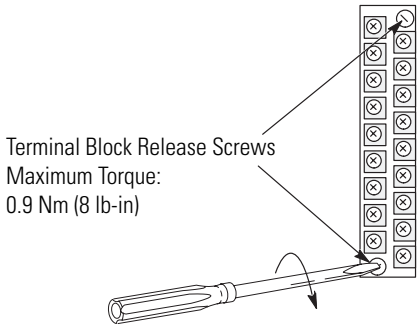

Starting Up Your Control System

This chapter describes how to start up your control system. To accomplish this, you must go through eight procedures.

Procedures for Starting the Control System

Start-up involves the following procedures to be carried out in this sequence.

1. Inspect your installation.
2. Disconnect motion-causing devices.
3. Initialize and test your processor.
4. Test your inputs.
5. Test your outputs.
6. Enter and test your program.
7. Observe control motion.
8. Conduct a dry run of your application.

These procedures isolate problems such as wiring mistakes, equipment malfunction, and programming errors in a systematic, controlled manner.

Go through these procedures very carefully to avoid possible personal injury and equipment damage.

IMPORTANT Do not attempt system start-up until you are thoroughly familiar with the controller components and programming/editing techniques. You must also be thoroughly familiar with the particular application.

For general recommendation concerning installation safety requirements and safety requirements and safety related work practices, refer to the requirements specific to your region.

- *Europe:* Reference the standards found in EN 60204 and your national regulations.

- *United States:* refer to NFPA 70E, Electrical Safety Requirements for Employee Workplaces.

1. Inspect Your Installation

You can often prevent serious problems in later test procedures by first making a thorough physical inspection. We recommend that you perform the following procedure.

1. Make sure that the controller and all other devices in the system are securely mounted.

2. Check all wiring including:
   - connections from the main disconnect to the controller input.
   - the master control relay/emergency-stop circuit.
   - input device circuits.
   - output device circuits.

   Make certain that all wiring connections are correct and that there are no missing wires. Check the tightness of all terminals to make certain wires are secure.

3. Measure the incoming line voltage. Be certain that it corresponds to controller requirements and that it falls within the specified voltage range. See specifications for input voltage ranges on page 176.

2. Disconnect Motion-Causing Device

In the following test procedures, the controller is energized. As a safety precaution, you must make certain that machine motion does not occur. The preferred way is to disconnect the motor wires at the motor starter or the motor itself. In this way, you can test the operation of the starter coil, verifying that your output circuit is wired correctly and functioning. Similarly, the preferred way to disconnect a solenoid is to disengage the valve, leaving the coil connected.

In some instances, you may not be able to disconnect a device the preferred way. In this case, it is necessary to open the output circuit at some convenient point.

For circuit testing purposes, it is best to open the circuit at a point as close as possible to the motion-causing device. For example, your output might be a relay coil that in turn energizes a motor starter; if it is impractical to disconnect the motor wires, the next best thing to do

is to open the circuit at a point between the motor starter and the relay contact.

ATTENTION

Machine motion during system checkout can be hazardous to personnel. During the checkout procedures 3, 4, 5, and 6, you must disconnect all devices that, when energized, might cause machine motion.

3. Initialize and Test Your Processor

When you are certain that machine motion cannot occur with the controller energized, you may begin by initializing the processor using the following steps.

1. Energize the chassis power supply. If power is supplied to the controller and the installation is correct, the initial factory conditions for all processors are provided in the following table.

Processor Name	DEFAULT	
Mode	Program mode or Fault mode	(S:1/0 to S:1/4 = 0 0001) or (S:1/0 to S:1/4 = 0.0001 and S:1/13 = 1)
Watchdog values	100 ms	S:3H = 0000 1010
I/O slot enables	ALL ENABLED	S:11/1 through S:12/14 set to 1
Node address (except SLC 5/04 and 5/05)	1	Channel 1 = DH485 S:15L = 0000 0001
Communication rate (except SLC 5/04 and 5/05)	19.2 Kbaud	Channel 1 = DH485 S:15H = 0000 0100
SLC 5/03, SLC 5/04, and SLC 5/05 processor only	Channel 0 configuration	DF1 Full-duplex No Handshaking 19.2 KBaud CRC Error Check Duplicate Detect On No Parity
SLC 5/04 processor only	Channel 1 configuration	DH+ 57.6 KBaud Default Node Address = 1
SLC 5/05 processor only	Channel 1 configuration	Ethernet[(1)] 10 Mbps

(1) Configuring with BOOTP enabled so that a BOOTP server on the network can automatically provide the SLC 5/05 processor with the configuration necessary to start communicating over Ethernet. See appendix G for more information.

ATTENTION

These steps are covered more extensively in your programming software and Hand-held Terminal user manuals. Reference these manuals if you have a problem completing one of the steps.

2. Turn on the programming device.

3. Configure the controller.

4. Name the program. (Becomes the processor name when downloaded.)

5. Program a sample test rung not affecting machine operation.

6. Save the program and controller configuration.

7. Transfer the controller configuration and sample test program to the processor. After the new program is transferred to the processor, the CPU FAULT status indicator should clear. The CPU FAULT (or FLT on the SLC 5/03, SLC 5/04, and SLC 5/05 processor) status indicator stops if it was flashing.

8. Enter the Run mode.

   The processor RUN status indicator should turn on, indicating that the controller is in the Run mode with no CPU faults. If any other CPU status exists, refer to chapter 10 for recommended action.

9. Monitor and exercise simple test rung.

   If a simple test rung operates successfully without CPU faults, you may assume basic processor functions are properly functioning. If any other processor status exists, refer to chapter 10 for recommended action.

4. Test Your Inputs

After successful processor initialization and test, follow this procedure to test your inputs.

1. Assuming you are still online with the programming device, put the controller into the Continuous Scan Test mode. This lets the processor scan the I/O and program, but not turn on any physical outputs.

2. Monitor the data in data File 1, the input data file. All configured Inputs should be displayed.

3. Make sure the first input slot, whatever slot number that may be, is shown on the monitor.

4. Select the first input device connected to the first input terminal on the input module in the I/O chassis.

5. Manually close and open the addressed input device.

ATTENTION

Never reach into a machine to actuate a device, unexpected machine operation could occur.

6. Observe the associated bit status using the programming device monitor function. Also, observe input status indicator.
   a. When the input device is closed and the signal power is at the input terminal, the associated status bit is set to a one, and the input status indicator should turn on.
   b. When the input device is opened and signal power does not exist at the input terminal, the associated status bit is set to a 0, and the input status indicator should go off.

7. If associated bit status and input status indicator match input device status, select the next input device and repeat steps 5 and 6 until all inputs in the SLC 500 chassis have been tested.

If associated bit status and input status indicator does not match the input device status, follow the recommended troubleshooting steps in the Input Troubleshooting Steps section.

Input Troubleshooting Steps

1. Make sure the processor is in the Continuous Scan Test mode.
2. If associated bit status and status indicator status do not match the input device status, check status file S:11 and S:12 I/O slot enables. Bits S:11/0 through S:11/15 and S:12/0 through S:12/14 should all be 1, enabling all I/O slots for the modular system.
3. Verify proper control power to the input device.
4. Remove the input device power and make sure circuit terminations are properly wired and tightened.
5. Re-energize the input device power, and check for proper control voltage between the input terminal and signal common terminal.
6. If proper input control voltage does not exist, first check minimum signal common by verifying voltage between input device power source and the input common terminal.
7. If proper input voltage does exist, first check the minimum input current specification on the input module, and then measure the current in the input circuit. Replace the input module if necessary.
8. If the input modules are OK, and proper voltage is measured between input device source and input module common terminal, test the input device and replace if necessary.

For more information on input troubleshooting see page 164.

5. Test Your Outputs

After you test all inputs, and have determined that they are functioning properly, test the outputs.

1. Refer to page 122 to insure no motion will occur when any controller output is energized.
2. Place the controller in the Program mode.

3. Create an output test rung as shown below for each output module configured.

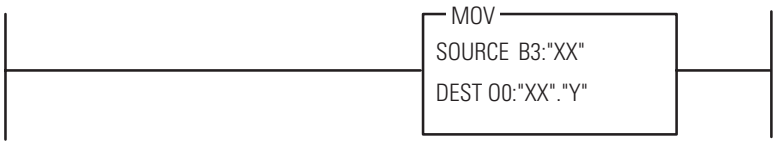

   Let XX represent slot number of the output currently selected. Y represents output word identifier. This rung moves a word of data from the bit file to the output file.

4. Save the output test program and current controller configuration.

5. Transfer the output test program to the processor.

6. Put the controller in the Run mode.

7. Monitor the data in data file B3 on the programming device display.

8. Enter B3: XX at address prompt to select the output to be tested. XX represents the output slot number.

9. Enter 1 at data prompt for the address that corresponds to the bit in the output word.

10. Observe the output status indicator and the output device.

    The output status indicator should turn on. The output device should be energized (unless you disconnected it to prevent machine motion).

11. Reset the data value back to zero for the selected address and both the output status indicator and output device should de-energize.

12. If the status indicator and the output device correspond to data settings in steps 10 and 11, repeat steps 8 through 11 for each output.

    If the status indicators and output device states do not correspond to the data settings in steps 9 and 11, follow the recommended steps in the Output Troubleshooting Steps section.

Output Troubleshooting Steps

1. Make sure the processor is in the Run mode.

2. Verify proper addressing of the output test rung from the previous page.

3. Using a programming device, locate the output data file and bit data file. See if the status of the associated bits between these files match.

4. If the status of the bits match in step 3, and if the status of the output status indicator match the status of the bits, but the status of the output device is different, continue to step 5.

   If the output status indicator does not match associated bit status, check status file S:11 and S:12 I/O slot enables. Bits S:11/0 through S:11/15 and S:12/0 through S:12/14 should all be 1 enabling all I/O slots for the modular system.

   If the output slot enable was verified, try exchanging the output module under test with identical hardware and retest. If the new hardware works properly, replace the original.

5. Verify proper output voltage at the output terminal and then at the output device.

6. De-energize the output circuit and check all output circuit terminations and wire routes.

7. If proper output voltage does not exist at the output device and the power source is adequate to drive the output device, test the output device and replace it if necessary.

For more information on output troubleshooting, see page 165.

6. Enter and Test Your Program

After you test all inputs and outputs and they are functioning properly, follow the steps below to safely and successfully enter and test your specific application program.

1. Verify the offline program.

   After the program has been entered in the offline edit file mode, program verification may begin.

   Remaining in the offline edit file mode, use the cursor keys and/or search function of your programming device to inspect every instruction and rung for errors.

2. Check your written program, rung for rung, against the program entered into the offline memory. The most common errors found in program entry are:
   - incorrect addressing of instructions.
   - omission of an instruction.
   - more than one output instruction programmed using the same address.

3. Transfer the program into the processor.
   a. Place your programming device online.
   b. Place the processor into Program mode.
   c. Select the download function when using the Hand-Held Terminal or the restore function when using your programming software.

4. Verify the online program transfer.
   a. Select monitor file function.
   b. Cursor through the program to verify that you selected the right program.

5. Conduct a single-scan program test.
   a. Select the monitor file function and place the cursor on the first rung.
   b. Select the Test mode.
   c. Select Single-Scan (SSN) test. In this test mode, the processor executes a single operating cycle, which includes reading the inputs, executing the ladder program, and updating all data without energizing the output circuits. However, the monitor file function will identify output status as if outputs were enabled.
      Timers are also incremented a minimum of 10 milliseconds each single scan.

d. Simulate the input conditions necessary to execute the current monitored rung of the program. If it is not practical to manually activate the input device, use the force function to simulate the proper condition.

ATTENTION

Never reach into a machine to actuate a device. Unexpected machine operation could occur.

e. Activate a single operating scan as outlined in the programming device user manual.

f. Verify the intended effects on the output instructions for that rung and overall program logic effects.

g. Select the next program rung and repeat test procedures as listed above until the entire program has been tested.

6. Conduct a continuous scan program test.

Once the individual single scan rung tests have been completed and proper program operation verified, a continuous scan test is appropriate before motion checkout.

The mode simulates the controller Run mode without energizing the external outputs.

Use the following steps to further verify proper program and system function operation.

a. Remain or return to an online condition with the processor.

b. Monitor the file.

c. Select Test mode.

d. Select the Continuous Scan test.

e. Simulate the input conditions necessary to execute system functions.

f. Verify the intended operation of each system function and the effects of other system functions.

ATTENTION

Never reach into a machine to actuate a device. Unexpected machine operation could occur.

7. Observe Control Motion

Now that program execution has been verified, checkout of control motion can begin. All persons involved with the programming, installation, layout design, machine or process design and maintenance should be involved in making decisions for determining the best and safest way to test the total system.

The following procedures are general in nature. Individual conditions may warrant their modification. The basic approach is to initiate testing with the least amount of machine motion. Only some outputs are allowed to generate machine motion. Then additional machine motion can be gradually added, thereby allowing any problems to be detected more easily under controlled conditions. The following procedure provides the steps for testing machine motion using one output at a time.

ATTENTION

During all phases of checkout, station a person ready to operate an emergency-stop switch if necessary. The emergency-stop switch will de-energize the master control relay and remove power from the machine. This circuit must be hardwired only, it **must not** be programmed.

Use this procedure to observe control motion.

1. Identify the first output device to be tested and reconnect its wiring.

   ATTENTION

   Contact with ac line potential may cause injury to personnel. When reconnecting wiring, make sure that the ac power disconnect switch is opened.

2. Place the controller in the Run mode and observe the behavior of the output device. To do this, simulate the input conditions necessary to energize the output in the program. If it is not practical to manually activate an input device, use the force function to simulate the proper input condition.

   ATTENTION

   Never reach into a machine to actuate a device, unexpected machine operation could occur.

3. Repeat steps 1 and 2, testing each output device, one at a time.

8. Conduct a Dry Run

ATTENTION

During all phases of checkout, station a person ready to operate an emergency-stop switch if necessary. The emergency-stop switch will de-energize the master control relay and remove power from the machine. This circuit must be hardwired only, it **must not** be programmed.

After thoroughly checking out the controller system and program, proceed with a dry run of the application with all of the output devices enabled. This dry run will vary with the application. A machine tool dry run would test the program with all outputs enabled but without tooling an actual part.

After you check out the entire system, and your dry run has been completed satisfactorily, we recommend that you load your program into an EEPROM memory module for back-up program storage. Refer to your programming software's online help for directions on loading the EEPROM from RAM.

This step completes start-up procedures. Your SLC programmable controller is now ready for operation.

Maintaining Your Control System

This chapter covers the following maintenance issues:

- Handling and storing battery, catalog number 1747-BA
- Installing and replacing the battery of the SLC 5/01 or SLC 5/02 processor
- Replacing your SLC 5/03, SLC 5/04, and SLC 5/05 battery
- Replacing retainer clips on an I/O module
- Replacing a fuse on the power supply

See page 72 for important information on testing the Master Control Relay Circuit and Preventive Maintenance.

Handling and Storing Battery, Catalog Number 1747-BA

Follow the procedure below to ensure proper battery operation and reduce personnel hazards.

Handling

- Use only for the intended operation.
- Do not ship or dispose of cells except according to recommended procedures.
- Do not ship on passenger aircraft.

ATTENTION

Do not charge the batteries. An explosion could result or the cells could overheat causing burns.

Do not open, puncture, crush, or otherwise mutilate the batteries. A possibility of an explosion exists and/or toxic, corrosive, and flammable liquids would be exposed.

Do not incinerate or expose the batteries to high temperatures. Do not attempt to solder batteries. An explosion could result.

Do not short positive and negative terminals together. Excessive heat can build up and cause severe burns.

Storing

Store the lithium batteries in a cool, dry environment, typically 20...25 °C (68...77 °F) and 40...60% relative humidity. Store the batteries and a copy of the battery instruction sheet in the original container, away from flammable materials.

Transporting

One or two batteries - Each battery contains 0.23 grams of lithium. Up to two batteries can be shipped together within the United States without restriction. Regulations governing shipment to or within other countries may differ.

Three or more batteries - Procedures for the transportation of three or more batteries shipped together within the United States are specified by the Department of Transportation (DOT) in the Code of Federal Regulations, CFR49, "Transportation." An exemption to these regulations, DOT - E7052, covers the transport of certain hazardous materials classified as flammable solids. This exemption authorizes transport of lithium batteries by motor vehicle, rail freight, cargo vessel, and cargo-only aircraft, providing certain conditions are met. Transport by passenger aircraft is not permitted.

A special provision of DOT-E7052 (11th Rev., October 21, 1982, par. 8-a) provides that:

> "Persons that receive cell and batteries covered by this exemption may reship them pursuant to the provisions of 49 CFR 173.22a in any of these packages authorized in this exemption including those in which they were received."

The Code of Federal Regulations, 49 CFR 173.22a, relates to the use of packaging authorized under exemptions. In part, it requires that you must maintain a copy of the exemption at each facility where the packaging is being used in connection with shipment under the exemption.

Shipment of depleted batteries for disposal may be subject to specific regulation of the countries involved or to regulations endorsed by those countries, such as the IATA Restricted Articles Regulations of the International Air Transport Association, Geneva, Switzerland.

IMPORTANT Regulations for transportation of lithium batteries are periodically revised.

Refer to http://www.dot.gov for the latest shipping information.

Disposal

ATTENTION

Do not incinerate or dispose of lithium batteries in general trash collection. Explosion or violent rupture is possible. Batteries should be collected for disposal in a manner to prevent against short circuiting, compacting, or destruction of case integrity and hermetic seal.

For disposal, batteries must be packaged and shipped in accordance with transportation regulations, to a proper disposal site. The U.S. Department of Transportation authorizes shipment of "Lithium batteries for disposal" by motor vehicle only in regulation 173.1015 of CFR 49 (effective January 5, 1983). For additional information contact:

U.S. Department of Transportation
Research and Special Programs Administration
400 Seventh Street, S.W.
Washington, D.C. 20590

Although the Environmental Protection Agency at this time has no regulations specific to lithium batteries, the material contained may be considered toxic, reactive, or corrosive. The person disposing of the material is responsible for any hazard created in doing so. State and local regulations may exist regarding the disposal of these materials.

For a lithium battery product safety data sheet, contact the manufacturer.

Sanyo Energy Corporation 600 Supreme Drive Bensenville, Il 60106 USA	or	Tadarand U.S. Battery Division 2 Seaview Blvd. Port Washington, NY 11050 USA

Install and Replace the Battery of the SLC 5/01 or SLC 5/02 Processor

Back-up power for RAM is provided by a replaceable battery. The lithium battery provides back-up for approximately five years for the 1747-L511 processor and two years for the 1747-L514 and 1747-L524 processor. A red BATTERY LOW status indicator alerts you when the battery voltage has fallen below a threshold level.

Once the BATTERY LOW status indicator goes on, do **not** remove processor power or your program may be lost. Replace the battery as soon as possible. You can replace the battery while the processor is powered.

Follow this procedure to install or replace the battery.

1. Open the door of the processor.
2. If you are installing a battery in a new processor (battery never installed before), remove the jumper from the battery connector socket. Store the jumper in safe place for possible future use without the battery.

   If you are replacing an old battery, unplug the existing battery connector and remove from the retainer clips. The figure below shows where to install the battery in a SLC 5/01 or SLC 5/02 processor.
3. Insert a new or replacement battery in the holder making sure it is held in by the retainer clips.
4. Plug the battery connector into the socket.

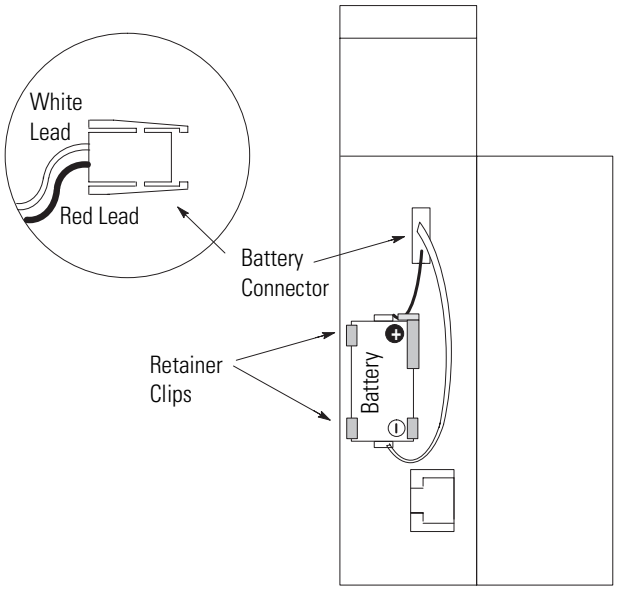

5. Close the processor door.

Replace Your SLC 5/03, SLC 5/04, or SLC 5/05 Battery

Your SLC 5/03, SLC 5/04, or SLC 5/05 processor provides back-up power for RAM through a replaceable lithium battery. This battery provides back-up for approximately 2 years. A BATT status indicator on the front of the processor alerts you when the battery voltage has fallen below a threshold level.

To replace the lithium battery, follow these steps.

ATTENTION

Do not remove the processor from the SLC 500 chassis until all power is removed from the SLC 500 power supply.

1. Remove power from the SLC 500 power supply.
2. Remove the processor from the chassis by pressing the retainer clips at both the top and bottom of the module and slide it out.

ATTENTION

Do not expose the processor to surfaces or other areas that may typically hold an electrostatic charge. Electrostatic charges can alter or destroy memory.

3. Unplug the battery connector. The figure below shows the battery connector location.

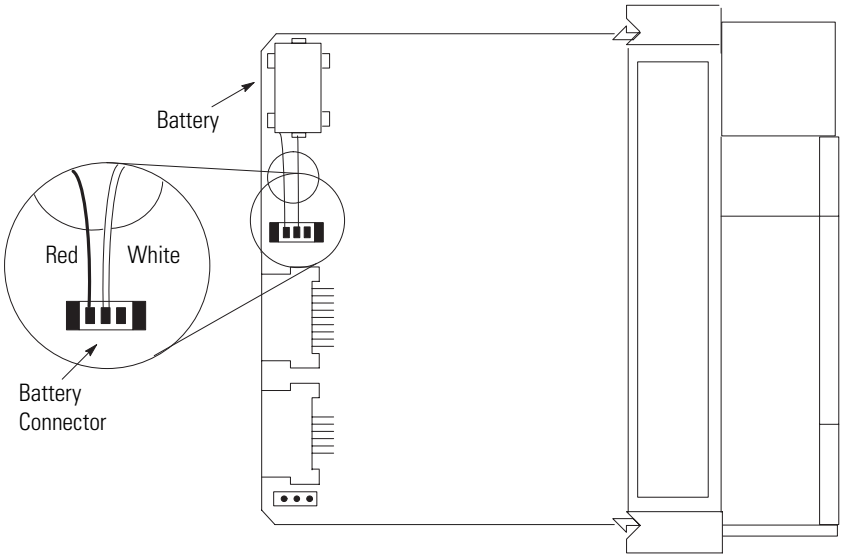

IMPORTANT The SLC 5/03, SLC 5/04, and SLC 5/05 processors have a capacitor that provides at least 30 minutes of battery back-up while the battery is disconnected. Data in RAM is not lost if the battery is replaced within 30 minutes.

4. Remove the battery from the retaining clips.
5. Insert a new battery into the battery retaining clips.
6. Plug the battery connector into the socket as shown in the figure on page 137.
7. Insert the module back into the SLC 500 chassis.
8. Restore power to the SLC 500 power supply.

Replacing Retainer Clips on an I/O Module

If it becomes necessary to replace the retainer clip (also called self-locking tab), order catalog number 1746-R15 (4 per package).

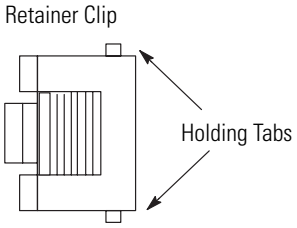

Remove Damaged Retainer Clips

If necessary, pry off the broken retainer clip from the bottom with a screwdriver. Do not twist it off. You can damage the module.

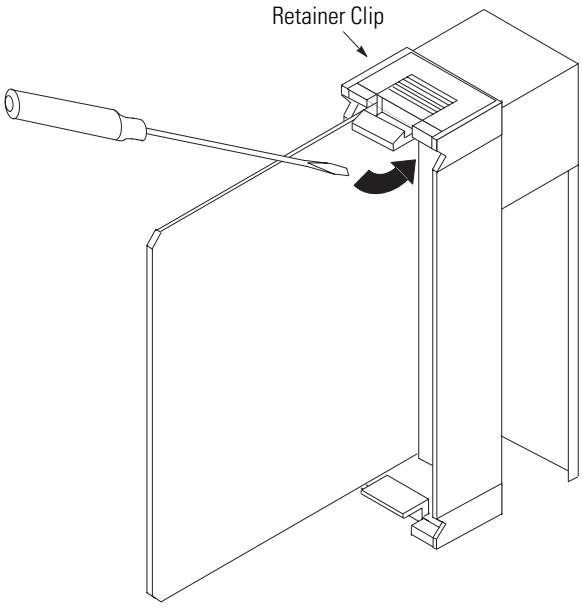

Install New Retainer Clips

Insert one of the pins of the retainer clip into the hole in the I/O module and then snap the other end in place.

Replace a Fuse on the Power Supply

Follow this procedure to replace a fuse on the power supply (only for the 1746-P1, 1746-P2, and 1746-P3 power supply).

1. Remove power from the SLC 500 power supply.
2. Open the door on the power supply and use a fuse puller to remove the fuse.

ATTENTION

Use only replacement fuses of the type and rating specified for the unit. Improper fuse selection can result in equipment damage.

3. Install a replacement fuse. See the figure below for fuse placement.

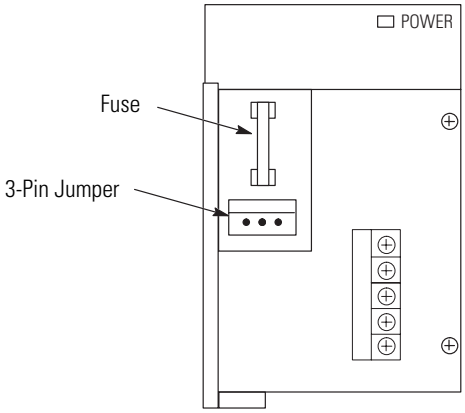

ATTENTION

The exposed pins on the 3-pin jumper is electrically live. Contact with the pin may cause injury to personnel.

Troubleshooting

In this chapter, you will learn about:

- contacting Rockwell Automation for assistance.
- tips for troubleshooting your control system.
- troubleshooting the SLC 5/01 and SLC 5/02 processors.
- troubleshooting the SLC 5/03, SLC 5/04, and SLC 5/05 processors.
- troubleshooting your input modules.
- troubleshooting your output modules.

Contacting Rockwell Automation for Assistance

If you need to contact Rockwell Automation or local distributor for assistance, it is helpful to obtain the following (prior to calling):

- Processor type, series letter, operating system (OS) number (obtained from the status file), firmware (FRN) number (see label on side of processor module)
- Processor status indicator status
- Processor error codes (found in S:6 of status file)
- Hardware types in system (I/O modules, chassis)
- Revision of programming software
- TechConnect serial number
- RSLogix software serial number

Tips for Troubleshooting Your Control System

When troubleshooting, pay careful attention to these general warnings.

ATTENTION

Have all personnel remain clear of the controller and equipment when power is applied. The problem may be intermittent and sudden unexpected machine motion could result in injury. Have someone ready to operate an emergency-stop switch in case it becomes necessary to shut off power to the controller equipment. Also, see NFPA 70E Part II for additional guidelines for safety-related work practices.

Never reach into a machine to actuate a switch since unexpected machine motion can occur and cause injury.

Remove all electrical power at the main power disconnect switches before checking electrical connections or inputs/outputs causing machine motion.

The first step in the troubleshooting procedure is to identify the problem and its source.

Locate the majority of faults by observing the diagnostic indicators on the front of the power supply, processor unit, and I/O modules. These indicators, along with error codes identified in the programming device user manual and software, help trace the source of the fault to the user's input/output devices, wiring, or the controller. Faults which do not clear by either toggling the keyswitch from Program to Run or cycling power, cannot be diagnosed or corrected without programming software.

A flashing fault status indicator may indicate the user program in the processor is corrupted and a copy of the program will be needed before contacting your local Allen-Bradley sales office or distributor for assistance.

Removing Power

Before working on a SLC 500 modular system, always remove the power supply input power at the main power disconnect switch.

The power status indicator on the power supply indicates that dc power is being supplied to the chassis. The status indicator could be off when incoming power is present.

Replacing Fuses

ATTENTION

When replacing a fuse, be sure to remove all power from the system. Replacing a blown fuse can rarely restore power supply operation, requiring the power supply to be replaced.

Program Alteration

There are several causes of alteration to the user program, including extreme environmental conditions, Electromagnetic Interference (EMI), improper grounding, improper wiring connections, and unauthorized tampering. If you suspect the memory has been altered, check the program against a previously saved program on an EEPROM, UVPROM or Flash EPROM module.

Troubleshooting the SLC 5/01 and SLC 5/02 Processors

Follow these steps to receive the maximum benefit of this troubleshooting section.

1. Identify the status of your processor status indicators. See chapter 5 for a description of status indicators and their states.
2. Using the tables on the following pages, match your processor and power supply status indicators with the status indicators in the first column.
3. Once the status indicators are matched to the appropriate table, move across the table identifying error description and probable causes.
4. Follow the recommended action steps for each probable cause until the error is corrected.
5. If recommended actions do not correct the error, contact your local Rockwell Automation sales office or distributor.

Identifying SLC 5/01 and SLC 5/02 Processor Errors

The following status indicators and tables provide you with information regarding error messages, possible cause(s) for the error, and recommended action to resolve the error.

SLC 5/01 and SLC 5/02 Processor Errors

If the status indicators indicate	The following error exists	Probable Cause	Recommended Action
• All status indicators are off • Status of SLC 5/02 Comm status indicator does not matter	Inadequate system power	No line power.	1. Verify proper line voltage and connections on the power terminals. 2. Verify proper 120/240V power supply jumper selection. See page 106.
		Power supply fuse blown.	1. Check the incoming power fuse, check for proper incoming power connections. Replace fuse. 2. If fuse blows again, replace the power supply. See page 139 on fuse replacement.
		Power supply overload.	1. Remove line power to power supply. Remove several output modules from the chassis. Wait five minutes. Reapply power. 2. If condition reoccurs, re-calculate module configuration power required and verify proper power supply selection. See page 36. This problem can occur intermittently if power supply is slightly overloaded when output loading and temperature varies.
		Defective power supply.	1. Recheck other probable causes. 2. Monitor the line power to chassis power supply for possible transient or shorting. 3. Replace the power supply.
• CPU Fault status indicator is on • All other status indicators are off • Status of SLC 5/02 Comm status indicator does not matter	Inadequate system power	Improper line power voltage selection.	Verify proper 120/240V power supply jumper selection. See page 106.

SLC 5/01 and SLC 5/02 Processor Errors

If the status indicators indicate	The following error exists	Probable Cause	Recommended Action
• Power status indicator is on • All other status indicators are off • Status of SLC 5/02 Comm status indicator does not matter	Processor not in run mode	Either improper mode selected or user program logic error.	1. Verify selected processor mode. 2. If in program or test mode, try to enter run mode. 3. If in suspend mode, check user program logic for suspend instructions.
		Line power out of operating range.	1. Check proper 120/240V power supply jumper selection and incoming power connections. 2. Monitor for proper line voltage at the incoming power connections.
		Improper seating of power supply and/or processor in the chassis.	1. Remove power and inspect the power supply and processor chassis connections. 2. Re-install the devices and re-apply power. **IMPORTANT** The processor only operates in slot 0 of the first chassis.
		Defective processor, power supply, or chassis.	1. Attempt to put processor in run mode in existing chassis. 2. Place the processor in another chassis. Apply power, reconfigure, and attempt to put processor in run mode. If unsuccessful, replace the processor. 3. Place the power supply in another chassis and test. If unsuccessful, replace the power supply. If successful, replace the original chassis.
• Power status indicator is on • Run status indicator is on • All other status indicators are off • Status of SLC 5/02 Comm status indicator does not matter	System inoperable, no major CPU faults detected	User program logic error.	1. Monitor logic in Run mode and verify desired I/O status. 2. Check for minor CPU faults.
		Defective I/O devices or I/O wiring.	Test inputs and outputs according to I/O troubleshooting procedures starting on page 163.

SLC 5/01 and SLC 5/02 Processor Errors

If the status indicators indicate	The following error exists	Probable Cause	Recommended Action
• Power status indicator on • CPU Fault status indicator is on • All other status indicators are off • Status of SLC 5/02 Comm status indicator does not matter	CPU fault	CPU memory error.	Cycle power.
		Faulty memory module.	1. Remove power and then remove the memory module from the processor. 2. Re-install the processor and re-apply power to the power supply. If steady CPU Fault status indicator changes to flashing, replace the existing memory module with a replacement module. See chapter 6 for removing and installing memory modules.
		Faulty processor or power supply.	1. Place the processor in another chassis not in the existing system and cycle power. If steady CPU Fault status indicator reappears, replace the processor. 2. If CPU Fault status indicator clears, monitor the line power going to the power supply in existing system. Replace existing system power supply if line power checks OK.
		Processor firmware installed incorrectly.	If upgrading the processor to a different firmware level, verify that the firmware chip orientation matches the upgrade kit directions.
• Power status indicator is on • CPU Fault status indicator is flashing • All other status indicators are off • Status of SLC 5/02 Comm status indicator does not matter	CPU major fault	Initial CPU factory power-up condition.	1. See chapter 8 and follow the start-up procedures. 2. Clear processor memory to get rid of the flashing CPU Fault status indicator.
		Hardware/software major fault detected. (erratic, repetitive power cycling can cause a processor major hardware fault)	1. Monitor Status File word S:6 for major error code. 2. Refer to the SLC 500 Instruction Set Reference Manual, publication 1747-RM001, for error codes and additional troubleshooting information. 3. Remove hardware/software condition causing fault. 4. Clear Status File S:1/13 major error bits, if set. 5. Clear Status File S:5 major error bits, if set. 6. Clear Status File S:6 major error code (optional). 7. Attempt to put processor in run mode. If unsuccessful, repeat recommended action steps above.

SLC 5/01 and SLC 5/02 Processor Errors

If the status indicators indicate	The following error exists	Probable Cause	Recommended Action
• Power status indicator is on • Run status indicator is on • Forced I/O status indicator is on • All other status indicators are off • Status of SLC 5/02 Comm status indicator does not matter	System does not operate per ladder logic	User forced I/O is disabling operation.	1. Monitor program file on-line and identify forced I/O. 2. Disable appropriate forces and test system conditions again.
• Power status indicator is on • Run status indicator is on • Forced I/O status indicator is flashing • All other status indicators are off • Status of SLC 5/02 Comm status indicator does not matter	System does not operate per programmed forces	User programmed forces are not enabled.	1. Monitor program file on-line and identify programmed forces. 2. Enable appropriate forces and test system conditions again. Once forces are enabled, the Forced I/O status indicator turns On (steady).
• Power status indicator is on • CPU Fault status indicator is flashing • Battery Low status indicator is on • All other status indicators are off • Status of SLC 5/02 Comm status indicator does not matter	CPU major error with low or no battery back-up	Loss of RAM during power-down.	1. Verify battery is connected. See page 136. 2. Replace the battery if you want RAM battery backup. See page 136. If you want to back up RAM with the capacitor in a SLC 5/01 (1747-L511), add or replace the Battery Low status indicator jumper. 3. Refer to processor major fault recommended action steps.

Identifying SLC 5/02 Processor Communication Errors

SLC 5/02 Processor Communication Errors

If the status indicators indicate	The following error exists	Probable Cause	Recommended Action
• Power status indicator is on • Comm status indicator is off • CPU Fault status indicator is off or flashing • Status of Run, Forced I/O, and Battery Low status indicators does not matter	The SLC 5/02 processor is not receiving data and is not communicating with the programmer	DH-485 communication parameters are improperly set up.	1. Check communication parameters of programmer. Programmer and processor communication rate must match. Programmer and processor node addresses must be different. 2. Try different combinations of: a. communication rate (default is 19.2 K) b. node address (default is 1) 3. Try to increase the maximum node address. (default is 31)
		Bad connection of communication device.	1. Check cable continuity. 2. Check cable connections between programmer and processor. 3. Check communication device (for example, the 1747-PIC interface). Replace if necessary.
		Low or no power to communication device.	1. Verify proper power supply selection and backplane loading. (The 1747-PIC and 1747-AIC interface draw power off the backplane.) 2. Verify proper 120/240V power supply jumper selection. See page 106.
• Power status indicator is on • Comm status indicator is on • CPU Fault status indicator is off or flashing • Status of Run, Forced I/O, and Battery Low status indicators does not matter	The SLC 5/02 processor is receiving data, but is not communicating with the programmer	DH-485 communication parameters are set up improperly.	1. Check communication parameters of programmer. Programmer and processor communication rate must match. Programmer and processor node addresses must be different. 2. Try different combinations of: a. communication rate (default is 19.2 K) b. node address (default is 1) 3. Try to increase the maximum node address. (default is 31)
• Power status indicator is on • CPU Fault status indicator is on • Status of all other status indicators does not matter	A fatal error has occurred	Excessive noise or a faulty SLC 5/02 processor.	1. Cycle power to obtain flashing CPU Fault status indicator and default program. 2. Examine the error code following the power cycle. Take appropriate action. 3. Reload the program. 4. Contact your local Rockwell Automation representative if the error persists.

Troubleshooting the SLC 5/03, SLC 5/04, and SLC 5/05 Processors

Between the time you apply power to an SLC 5/03, SLC 5/04, or SLC 5/05 processor and the communication are established via a connected programming device, the only form of communication between you and the processor is through the status indicator display.

When power is applied, all of the status indicators flash on and then off while the processor conducts hardware tests. This is part of the normal powerup sequence. Following the selftest by the processor, all the status indicators again flash on momentarily. If a user program is in a running state, the RUN status indicator will be on. If a fault exists within the processor, the FLT status indicator is on.

Follow these steps to receive the maximum benefit of this troubleshooting section.

1. Identify the status of your processor status indicators. See chapter 5 for description of status indicators and their different states.
2. Using the tables on the following pages, match your processor and power supply status indicators with the status indicators in the first column.
3. Once the status indicators are matched to the appropriate table, move across the table identifying error description and probable causes.
4. Then follow the recommended action steps for each probable cause until the cause is identified.
5. If recommended actions do not identify the trouble cause, contact your local Rockwell Automation sales office or distributor.

Clearing SLC 5/03, SLC 5/04, and SLC 5/05 Processor Faults Using the Keyswitch

Toggle the keyswitch from RUN to PROG and then back to RUN; this will clear some faults. If the keyswitch is left in the RUN position, the processor mode cannot be changed from a programmer/operator interface device. If you return the keyswitch to the REM position, you

can then use a programmer/operator interface device to change the processor mode.

ATTENTION

If you clear a processor fault using the keyswitch, the processor immediately enters the Run mode.

Identifying SLC 5/03, SLC 5/04, and SLC 5/05 Processor Errors

The following status indicators and tables provide you with information regarding error messages, possible cause(s) for the error, and recommended action to resolve the error.

SLC 5/03, SLC 5/04, and SLC 5/05 Processor Errors

If the status indicators indicate	The following error exists	Probable Cause	Recommended Action
• All status indicators are off • Status of any Communication status indicator does not matter	Inadequate system power	No line power.	1. Verify proper line voltage and connections on the power terminals. 2. Verify proper 120/240V power supply jumper selection. See page 106.
		Power supply fuse blown.	1. Check the incoming power fuse, check for proper incoming power connections. Replace fuse. 2. If fuse blows again, replace the power supply. See page 139 on fuse replacement.
		Power supply overload.	1. Remove line power to power supply. remove several output modules from the chassis. wait five minutes. reapply power. 2. If condition reoccurs, re-calculate module configuration power required and verify proper power supply selection. See page 36. This problem can occur intermittently if power supply is slightly overloaded when output loading and temperature varies.
		Defective power supply.	1. Recheck other probable causes. 2. Monitor the line power to chassis power supply for possible transient or shorting. 3. Replace the power supply.

SLC 5/03, SLC 5/04, and SLC 5/05 Processor Errors

If the status indicators indicate	The following error exists	Probable Cause	Recommended Action
• FLT status indicator is on • All other status indicators are off • Status of any Communication status indicator does not matter	Inadequate system power	Improper line power voltage selection.	Verify proper 120/240V power supply jumper selection. See page 106.
• Power status indicator is on • All other status indicators are off • Status of any Communication status indicator does not matter	Processor not in run mode	Either improper mode selected or user program logic error.	1. Verify selected processor mode. 2. If in program or test mode, try to enter run mode. a. If the keyswitch is in the REM position and there is no key, use the programmer. b. If the keyswitch is in the REM or PROG position and you have the key, toggle to the RUN position. 3. If in suspend mode, check user program logic for suspend instructions.
		Line power out of operating range.	1. Check proper 120/240V power supply jumper selection and incoming power connections. 2. Monitor for proper line voltage at the incoming power connections.
		Improper seating of power supply and/or processor in the chassis.	1. Remove power and inspect the power supply and processor chassis connections. 2. Re-install the devices and re-apply power. **IMPORTANT** The processor only operates in slot 0 of the first chassis.
		Defective processor, power supply, or chassis.	1. Attempt to put processor in run mode in existing chassis. a. If the keyswitch is in the REM position and there is no key, use the programmer. b. If the keyswitch is in the REM or PROG position and you have the key, toggle to the RUN position. 2. Place the processor in another chassis. Apply power, reconfigure, and attempt to put processor in run mode. If unsuccessful, replace the processor. 3. Place the power supply in another chassis and test. If unsuccessful, replace the power supply. If successful, replace the original chassis.

SLC 5/03, SLC 5/04, and SLC 5/05 Processor Errors

If the status indicators indicate	The following error exists	Probable Cause	Recommended Action
• Power status indicator is on • Run status indicator is on • All other status indicators are Off • Status of any Communication status indicator does not matter	System inoperable, no major CPU faults detected	User program logic error.	1. Monitor logic in Run mode and verify desired I/O status. 2. Check for minor CPU faults.
		Defective I/O devices or I/O wiring.	Test inputs and outputs according to I/O troubleshooting procedures starting on page 163.
• Power status indicator is on • CPU Fault status indicator is on • All other status indicators are off • Status of any Communication status indicator does not matter	CPU fault	CPU memory error.	Cycle power.
		Faulty memory module.	1. Remove power and then remove the memory module from the processor. 2. Re-install the processor and re-apply power to the power supply. If steady CPU Fault status indicator changes to flashing, replace the existing memory module with a replacement module. Refer to 6 for removing and installing memory modules.
		Faulty processor or power supply.	1. Place the processor in another chassis not in the existing system and cycle power. If steady CPU Fault status indicator reappears, replace the processor. 2. If CPU Fault status indicator clears, monitor the line power going to the power supply in existing system. Replace existing system power supply if line power checks OK.
		Processor firmware installed incorrectly.	If upgrading the processor to a different firmware level, verify that the firmware chip orientation matches the upgrade kit directions.

SLC 5/03, SLC 5/04, and SLC 5/05 Processor Errors

If the status indicators indicate	The following error exists	Probable Cause	Recommended Action
• Power status indicator is on • CPU Fault status indicator is flashing • All other status indicators are off • Status of any Communication status indicator does not matter	CPU major fault	Initial CPU factory power-up condition.	1. See page 121 and follow the start-up procedures. 2. Clear processor memory to get rid of the flashing CPU Fault status indicator.
		Hardware/software major fault detected. (erratic, repetitive power cycling can cause a processor major hardware fault)	1. If the error occurred during the download of a new program to the processor, check the position of the J4 jumper. See page 159. If the jumper is not in the protected position: a. Place the jumper in the protected position b. Re-download a valid user program to the processor 2. Use programmer to monitor and clear the fault (or if keyswitch in REM position): a. Monitor Status File word S:6 for major error code. b. Refer to your programming software documentation or the SLC 500 Instruction Set Reference Manual, publication 1747-RM001, for error codes and additional troubleshooting information. c. Remove hardware/software condition causing fault. d. Clear Status File S:1/13 major error bits, if set. e. Clear Status File S:5 major error bits, if set. f. Clear Status File S:6 major error code (optional). g. Attempt to put processor in run mode. If unsuccessful, repeat recommended action steps above. 3. Use the keyswitch to clear the fault. Toggle the keyswitch to PROG and back to RUN. (See page 149). If fault occurs again, use programmer to get error code and determine the source of the problem.

SLC 5/03, SLC 5/04, and SLC 5/05 Processor Errors

If the status indicators indicate	The following error exists	Probable Cause	Recommended Action
• Power status indicator is on • Run status indicator is on • Force status indicator is on • All other status indicators are off • Status of any Communication status indicator does not matter	System does not operate per ladder logic	User forced I/O is disabling operation.	1. Monitor program file on-line and identify forced I/O. 2. Disable appropriate forces and test system conditions again.
• Power status indicator is on • Run status indicator is on • Force status indicator is flashing • All other status indicators are off • Status of any Communication status indicator does not matter	System does not operate per programmed forces	User programmed forces are not enabled.	1. Monitor program file on-line and identify programmed forces. 2. Enable appropriate forces and test system conditions again. Once forces are enabled, the Force status indicator turns on (steady).
• Power status indicator is on • FLT status indicator is flashing • Batt status indicator is on • All Other status indicators are off • Status of any Communication status indicator does not matter	CPU major error with low or no battery back-up	Loss of RAM during power-down.	1. Verify battery is connected. See page 137. 2. Replace the battery if you want RAM battery backup. See page 137. 3. Refer to processor major fault recommended action steps.

Identifying SLC 5/03, SLC 5/04, and SLC 5/05 Processor Communication Errors

SLC 5/03. SLC 4/04, and SLC 5/05 Communication Errors

If the status indicators indicate	The following error exists	Probable Cause	Recommended Action
• Power status indicator is on • DH-485, DH+, or ENET status indicator is off • FLT status indicator is off or flashing • Status of Run, Force, Batt, and RS232 status indicators do not matter	Fatal error and no communication	Inadequate system power.	1. Check line power. 2. Check 120/240V power supply jumper selection. See page 106. Also, see the recommended actions for inadequate system power on page 150.
		Communication channel is shut down.	Check communication channel configuration with your programming software. Also, see page 161 to return the processor to initial factory conditions.
		Communication channel is damaged.	Replace the processor.
• Power status indicator is on • RS232 status indicator is off • FLT status indicator is off or flashing • Status of Run; Force; DH-485, DH+, or ENET; or Batt status indicators do not matter	Fatal error and no communication	Inadequate system power.	1. Check line power. 2. Check 120/240V power supply jumper selection. See page 106. Also, see the recommended actions for inadequate system power on page 150.
		Communication channel is shut down.	Check communication channel configuration with your programming software. Also, see page 161 to return the processor to initial factory conditions.
		communication channel is damaged.	Replace the processor.
		Channel configured for DF1 or User mode.	See your programming software documentation for channel configuration information.

SLC 5/03. SLC 4/04, and SLC 5/05 Communication Errors

If the status indicators indicate	The following error exists	Probable Cause	Recommended Action
• Power status indicator is on • DH-485, DH+, or ENET status indicator is flashing • FLT status indicator is off or flashing • Status of Run, Force, Batt, and RS232 status indicators do not matter	The SLC 5/03 or SLC 5/04 processor is trying to establish communication, but cannot find other active nodes. (The DH-485 or DH+ status indicator is flashing green.)	DH-485 or DH+ communication parameters are improperly set up.	1. Check communication parameters of programmer. Programmer and processor communication rate must match. Programmer and processor node addresses must be different. 2. Try different combinations of: a. communication rate (default is 19.2 K for DH-485 and 57.6 K for DH+) b. node address (default is 1) 3. Try to increase the maximum node address. (default is 31 for DH-485)
		Bad connection of communication device.	1. Check cable continuity. 2. Check cable connections between programmer and processor. 3. Check communication device (for example, the 1747-PIC interface). Replace if necessary.
		Low or no power to communication device.	1. Verify proper power supply selection and backplane loading. (1747-PIC and 1747-AIC interface draw power off the backplane.) 2. Verify proper 120/240V power supply jumper selection. See page 106.
	Duplicate drop is detected. (The DH+ status indicator is flashing red.)	Another DH+ device is already on the DH+ network at this node address.	1. Remove this device from the DH+ network. 2. Cycle power. 3. Reset the node address to an unused node before reconnecting device to the DH+ network. (Can perform reset if on-line via channel 0 RS-232 port without disconnecting from DH+.)
	An ENET fault is being reported via a code. (The ENET status indicator is flashing red.)	A hardware or software fault has occurred.	Contact Rockwell Automation for assistance.

SLC 5/03. SLC 4/04, and SLC 5/05 Communication Errors

If the status indicators indicate	The following error exists	Probable Cause	Recommended Action
• Power status indicator is on • RS232 status indicator is flashing • FLT status indicator is off or flashing • Status of Run; Force; DH-485, DH+, or ENET; or Batt status indicators do not matter	The processor is trying to establish communication, but cannot find other active nodes	DH-485 communication parameters are set up improperly.	1. Check communication parameters of programmer. Programmer and processor communication rate must match. Programmer and processor node addresses must be different. 2. Try different combinations of: a. communication rate (default is 19.2 K for DH-485) b. node address (default is 1) 3. Try to increase the maximum node address. (default is 31 for DH-485)
		Bad connection of communication Device.	1. Check cable continuity. 2. Check cable connections between programmer and processor. 3. Check communication device (for example, the 1747-PIC interface). replace if necessary.
		Low or no power to communication device.	1. Verify proper power supply selection and backplane loading. (1747-PIC and 1747-AIC interface draw power off the backplane.) 2. Verify proper 120/240V power supply jumper selection. See page 106.

SLC 5/03. SLC 4/04, and SLC 5/05 Communication Errors

If the status indicators indicate	The following error exists	Probable Cause	Recommended Action
• Power status indicator is on • RS232 status indicator is off • FLT status indicator is off or flashing • Status of Run; Force; DH-485, DH+, or ENET; or Batt status indicators do not matter	The processor is not transmitting	Channel is configured for DH-485 mode.	Check communication parameters of channel configuration. Also, refer to your programming software documentation.
		RS232/DF1 parameters are set up improperly.	Check the following communication parameters of programmer and channel configuration. 1. communication rate - programmer and processor communication rates must match 2. DF1 node addresses (default is 1 for half-duplex, and 9 for full-duplex) - programmer and processor addresses must be different 3. error checking 4. number of data bits
		Hardware problem.	1. Check cable connections. 2. Check cable pinouts. Also, see appendix C for RS-232 pinouts.
• Power status indicator is on • FLT status indicator is on • Status of all other status indicators do not matter	A fatal error has occurred	Excessive noise or a faulty processor.	1. Cycle power to obtain flashing FLT status indicator and default program. 2. Examine the error code following the power cycle. Take appropriate action. 3. Reload the program. 4. Contact your local Rockwell Automation representative if the error persists.

Identifying Processor Errors while Downloading an Operating System

The download process of the operating system by the SLC 5/03, SLC 5/04, and SLC 5/05 processors takes up to 2.5 minutes. While the download is in progress, the RUN and FLT status indicators remain off. The other four status indicators - RS232, DH485 (DH+on the SLC 5/04 and ENET on the SLC 5/05), FORCE, and BATT - turn on and off in a walking bit sequence. If the download is successful, these four status indicators remain on together.

ATTENTION

Jumper J4, on the bottom corner of the motherboard, provides write-protection from any download of a new operating system. The out of the box position of this jumper is PROTECT, or write-protect. Without the jumper, the processors are write-protected. Do not place the jumper to the program position during normal processor use.

Jumper Placement

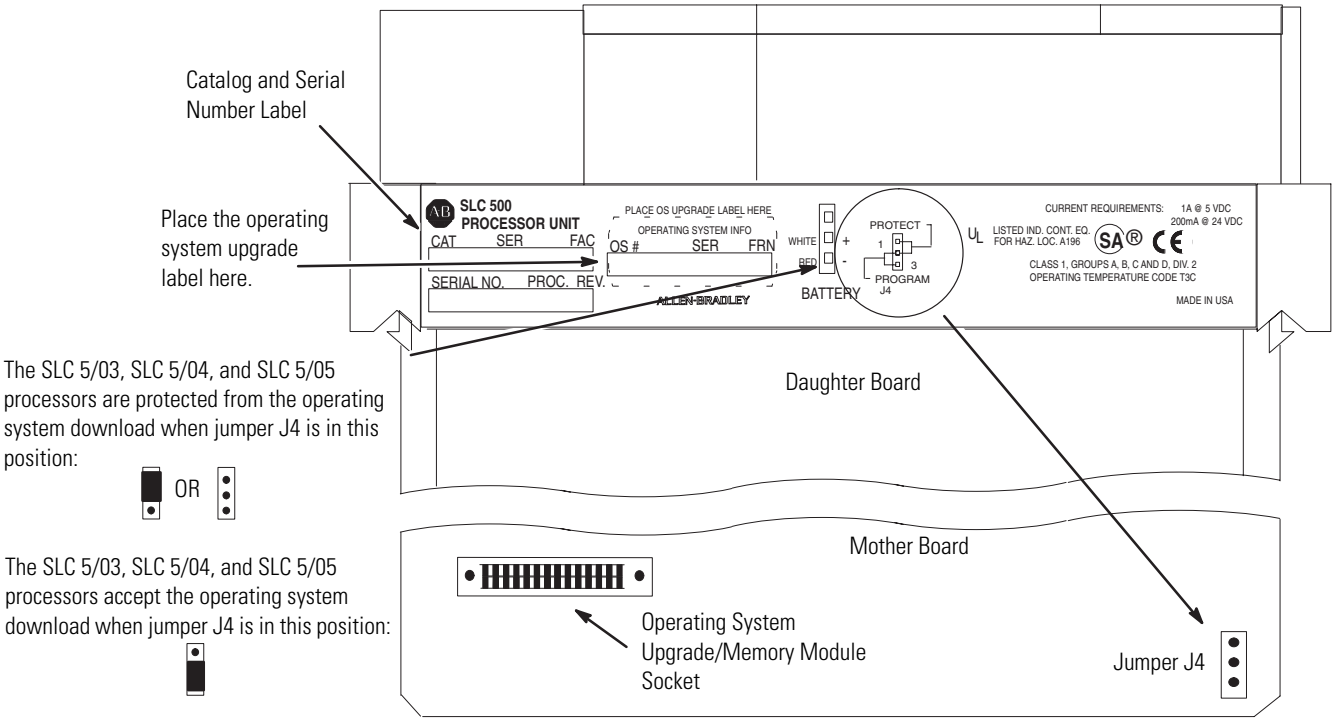

If the download is **not** successful, the FLT status indicator turns on and a combination of status indicators flash on and off indicating an error condition. The following table provides you with information regarding error messages, possible cause(s) for the error, and recommended action to resolve the error.

Status Indicator							The following error exists	Probable Cause	Recommended Action
POWER	RUN	FORCE	FLT	DH485/DH+/ENET	BATT	RS232			
On	Off	Off	On	Off	On	Off	NVRAM error	Major hardware failure due to noise, improper grounding, or poor power source.	Cycle power and see if the error repeats itself. If the error clears, you should be able to download the operating system. If the error persists, contact your Rockwell Automation representative.
On	Off	On	On	On	Off	On	Hardware Watchdog Timeout	Major hardware failure due to noise, improper grounding, or poor power source.	Cycle power and see if the error repeats itself. If the error clears, you should be able to download the operating system. If the error persists, contact your Rockwell Automation representative.
On	Off	On	On	On	Off	Off	Fatal Hardware Error	Major hardware failure due to noise, improper grounding, or poor power source.	Cycle power and see if the error repeats itself. If the error clears, you should be able to download the operating system. If the error persists, contact your Rockwell Automation representative.
On	Off	Off	On	Off	On	On	Corrupted Operating System Memory Module	The operating system on the Flash EPROM is corrupt.	Cycle power and see if the error repeats itself. If the error persists, either contact your Rockwell Automation representative for a new operating system memory module, or download the old operating system.
On	Off	On	On	Off	On	Off	Flash EPROM Failure	The processor flash is corrupt.	Cycle power and see if the error repeats itself. If the error clears, you should be able to download the operating system. If the error persists, contact your Rockwell Automation representative.
On	Off	On	On	On	On	Off	Corrupt or Missing Operating System	The operating system is missing or has been corrupted.	Cycle power and see if the error repeats itself. If the error clears, you should be able to download the operating system. If the error persists, contact your Rockwell Automation representative for a new operating system.
On	Off	On	On	Off	On	On	Downloadable Operating System Failure	Failure during transmission of downloadable operating system.	Download the operating system.
On	Off	Off	On	On	On	Off	Incompatible Platform	The upgrade of the operating system is incompatible with the processor hardware.	Use an operating system that is compatible with your processor hardware.
On	Off	Off	On	On	On	On	Memory Write-Protected	An attempt was made to download the operating system onto write-protected memory.	Change the jumper on the processor to the program position.

Returning the SLC 5/03, SLC 5/04, and SLC 5/05 Processors to Initial Factory Conditions

We **only** recommend this procedure if the communication channels have been shut down due to the configuration parameters, or if you absolutely cannot establish communication with the processor.

WARNING

If you return the processor to the initial factory conditions, the user program is lost and communication configurations are returned to their default settings.

Follow this procedure to return the processor to initial factory conditions.

1. Remove power from the SLC 500 power supply.
2. Remove the processor from the chassis.
3. Disconnect the battery by removing the battery connector from its socket.
4. Locate the VBB and GND connections on the right side of the motherboard.
5. Place a small bladed screwdriver across the VBB and GND connections and hold for 60 seconds. This returns the processor to the initial factory conditions.

SLC 5/03 (1747-L531, 1747-L532 and 1747-L533) Processors

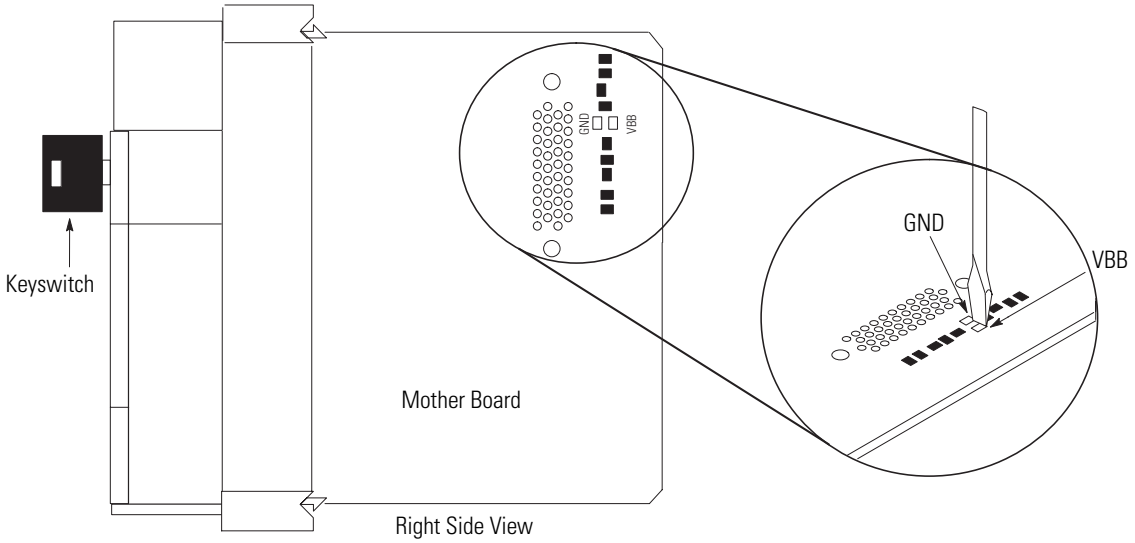

SLC 5/04 (1747-L541, 1747-L542, and 1747-L543)
SLC 5/05 (1747-L551, 1747-L552, and 1747-L553) Processors

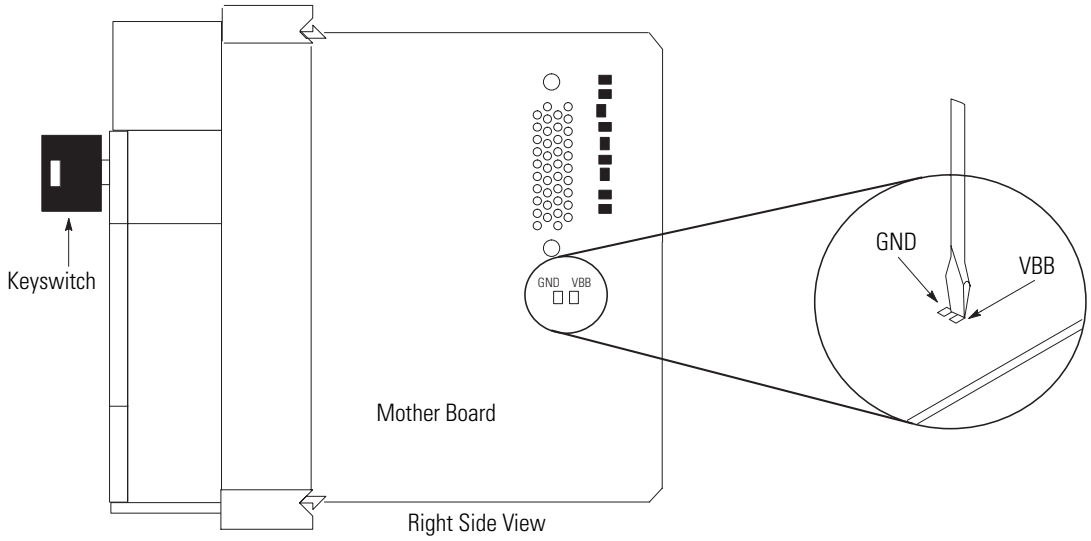

Troubleshooting Your Input Modules

The following will assist you in troubleshooting your input modules.

Input Circuit Operation

An input circuit responds to an input signal in the following manner.

1. An input filter removes false signals due to contact bounce or electrical interference.
2. Opto-electrical isolation protects the input circuit and backplane circuits by isolating logic circuits from input signals.
3. Logic circuits process the signal.
4. An input status indicator turns on or off indicating the status of the corresponding input device.

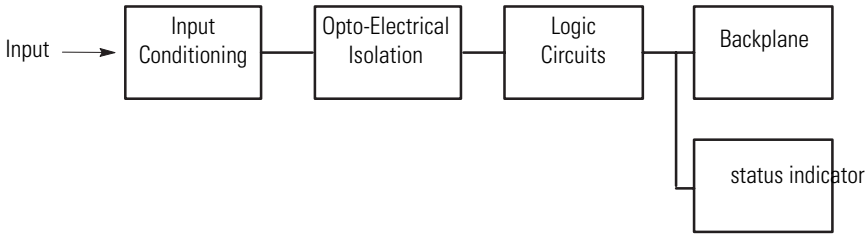

Troubleshooting Your Input Modules

If your input circuit status indicator is	And your input device is	And	Probable Cause	Recommended Action
On	On/closed/activated	Your input device will not turn off.	Device is shorted or damaged.	Verify device operation. Replace device.
		Your program operates as though it is off.	Input circuit is damaged.	Verify proper wiring. Try other input circuit. Replace module.
			Input is forced off in program.	Check the FORCED I/O or FORCE status indicator on processor and remove forces.
	Off/open/deactivated	Your program operates as though it is on and/or the input circuit will not turn off.	Input device Off-state leakage current exceeds input circuit specification.	Check device and input circuit specifications. Use load resistor to bleed-off current.
			Input device is shorted or damaged.	Verify device operation. Replace device.
			Input circuit is damaged.	Verify proper wiring. Try other input circuit. Replace module.
Off	On/closed/activated	Your program operates as though it is off and/or the input circuit will not turn on.	Input circuit is incompatible.	Check specification and sink/source compatibility (if dc input).
			Low voltage across the input.	Check the voltage across input circuit and check source voltage.
			Incorrect wiring or an open circuit.	Check wiring and COMmon connections.
			Input signal turn-on time too fast for input circuit.	Check timing specifications.
			Input circuit is damaged.	Verify proper wiring. Try other input circuit. Replace module.
	Off/open/deactivated	Your input device will not turn on.	Input device is shorted or damaged.	Verify operation. Replace device.
		Your program operates as though it is on.	Input is forced on in program.	Check processor FORCED I/O or FORCE status indicator and remove forces. Verify proper wiring. Try other input circuit. Replace module.
			Input circuit is damaged.	Verify proper wiring. Try other input circuit. Replace module.

Troubleshooting Your Output Modules

The following will assist you in troubleshooting your output modules.

Output Circuit Operation

An output circuit controls the output signal in the following manner.

1. Logic circuits determine the output status.
2. An output status indicator indicates the status of the output signal.
3. Opto-electrical isolation separates output circuit logic and backplane circuits from field signals.
4. The output driver turns the corresponding output on or off.

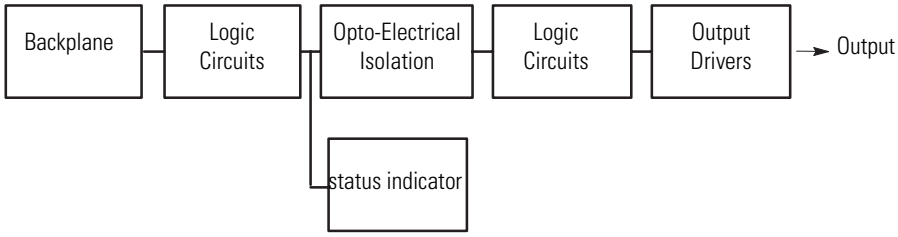

Troubleshooting Your Output Modules

If your Output Circuit status indicator is	And your output device is	And	Probable Cause	Recommended Action
On	On/energized	Your program indicates that the output circuit is off or the output circuit will not turn off.	Programming problem.	Check for duplicate outputs and addresses using the search function. If using subroutines, outputs are left in their last state when not executing subroutines. Use the force function to force output off. If this does not force the output off, output circuit is damaged. If the output does force off, then check again for logic/programming problem.
			Output is forced on in program.	Check processor FORCED I/O or FORCE status indicator and remove forces.
			Output circuit is damaged.	Use the force function to force the output off. If this forces the output off, then there is a logic/programming problem. If this does not force the output off, the output circuit is damaged. Try other output circuit. Replace module.
	Off/de-energized	Your output device will not turn on and the program indicates that it is on.	Low or no voltage across the load.	Measure the source voltage and check specifications.
			Incorrect wiring or open circuit.	Check wiring and COMmon connections.
			Output device is incompatible.	Check specifications and sink/source compatibility (if dc output).
			Output circuit is damaged.	Check wiring. Try other output circuit. Replace module.

If your Output Circuit status indicator is	And your output device is	And	Probable Cause	Recommended Action
Off	On/energized	Your output device will not turn off and the program indicates that it is off.	Output device is incompatible.	Check specifications.
			Output circuit off-state leakage current may exceed output device specification.	Check specifications. Use load resistor to bleed off leakage current. See output specifications.
			Incorrect wiring.	Check wiring. Disconnect from SLC processor and verify device operation.
			Output device is shorted or damaged.	Verify device operation. Replace device.
			Output circuit is damaged.	Check wiring. Try other output circuit. Replace module.
	Off/de-energized	Your program indicates that the output circuit is on or the output circuit will not turn on.	Programming problem.	Check for duplicate outputs and addresses using search function. If using subroutines, outputs are left in their last state when not executing subroutines. Use the force function to force output on. If this does not force the output on, output circuit is damaged. If the output does force on, then check again for logic/programming problem.
			Output is forced off in program.	Check processor FORCED I/O or FORCE status indicator and remove forces.
			Output circuit is damaged.	Use the force function to force the output on. If this forces the output on, then there is a logic/programming problem. If this does not force the output on, the output circuit is damaged. Try other output circuit. Replace module.

Notes:

Replacement Parts

This chapter provides a list of replacement parts and a list of replacement terminal blocks for your SLC 500 controller.

Replacement Cables and Connectors

Description	Cat. No.
Chassis Interconnect Cable - The 1746-C7 cable is a 152.4 mm (6 in.) ribbon cable used when linking modular hardware style chassis up to 152.4 mm (6 in.) apart in an enclosure.	1746-C7
Chassis Interconnect Cable - The 1746-C9 cable is a 914.4 mm (36 in.) cable used when linking modular hardware style chassis from 152.4 mm (6 in.) up to 914.4 mm (36 in.) apart in an enclosure.	1746-C9
Chassis Interconnect Cable - The 1746-C16 cable is a 1.27m (50 in.) cable used when linking modular hardware style chassis from 0.914m (36 in.) up to 1.27m (50 in.) apart in an enclosure. This is the longest chassis interconnect cable recommended by Allen-Bradley.	1746-C16
32 Point Mating Connector - This connector is used for terminating a user-made cable. It is compatible with the DIN RAIL mountable terminal block interface module, catalog number 1492-IFM40*x* (used with 32-point I/O modules).	1746-N3
Replacement Processor to Peripheral Programming/Communication Cable - This 1.8 m (6 ft) cable is used to connect the interface converter to the SLC 500 controller when using personal computer interface software. This cable is also used to connect the Hand-held Terminal to the SLC 500 controller and to connect the Data Table Access Module to the SLC 500 controller.	1747-C10
Replacement Processor to Isolated Link Coupler Cable - This 304.8 mm (12 in.) cable is used to connect the SLC 500 controller to the isolated link coupler.	1747-C11
Communication Module to Isolated Link Coupler Cable - This 914.4 mm (36 in.) cable is used to connect communication modules (for example, 1746-BAS, 1747-KE, and 1747-UIC interface) to the isolated link coupler. The isolated link coupler must be powered by an external power supply or connected to a device with a 1747-C10 or 1747-C11 cable.	1747-C13
Replacement Processor to Peripheral Programming/Communication Cable - This 6.09 m (20 ft) cable is used to connect the interface converter to the SLC 500 controller when using personal computer interface software. This cable is used to connect the Data Table Access Module to the SLC 500 controller.	1747-C20
SLC 5/03, SLC 5/04, and SLC 5/05 RS-232 Programmer Cable - This 3.96 m (12 ft) cable has two 9-pin DTE connectors and is used to connect the SLC processor RS-232 channel (channel 0) to a personal computer serial port.	1747-CP3
SLC 5/03, SLC 5/04, and SLC 5/05 Communication Cable - This 45 cm (17.7 in.) cable has two 9-pin DTE connectors and is used to connect the SLC processor RS-232 channel (channel 0) to port 1 of the 1761-NET-AIC advanced interface converter.	1761-CBL-AC00
SLC 5/03, SLC 5/04, and SLC 5/05 Communication Cable - This 2 m (6.5 in.) cable has a 9-pin DTE and an 8-pin mini DIN connector and is used to connect the SLC processor RS-232 channel (channel 0) to port 2 of the 1761-NET-AIC advanced interface converter.	1761-CBL-PM02
SLC 5/03, SLC 5/04, and SLC 5/05 Communication Cable - This 45 cm (17.7 in.) cable has a 9-pin DTE and an 8-pin mini DIN connector and is used to connect the SLC processor RS-232 channel (channel 0) to port 2 of the 1761-NET-AIC advanced interface converter.	1761-CBL-AP00

Description	Cat. No.
RJ45 to 6-Pin Phoenix Connector Communication Cable - This 3 m (9.8 ft) cable is used to connect the SLC 500 fixed, SLC 5/01, SLC 5/02, and SLC 5/03 processor RJ45 port to port 3 of the 1761-NET-AIC advanced interface converter.	1761-CBL-AS03
RJ45 to 6-Pin Phoenix Connector Communication Cable - This 9.5 m (31.2 ft) cable is used to connect the SLC 500 fixed, SLC 5/01, SLC 5/02, and SLC 5/03 processor RJ45 port to port 3 of the 1761-NET-AIC advanced interface converter.	1761-CBL-AS09
Catalog 1492 pre-wired interface cables	1492

Cable Connectivity Summary

For Connectivity Between These Devices		Preferred Cable Cat. No.	These Cables May Be Used
1746-A4, 1746-A7, 1746-A10, or 1746-A13 chassis	1746-A4, 1746-A7, 1746-A10, or 1746-A13 chassis	1746-C7 1746-C9 1746-C16	-
1747-PIC Personal Interface Converter 1747-DTAM-E Data Table Access module 2707-L*xxx*, 2707-V*xxx* DTAM Plus	1747-AIC Isolated Link Coupler SLC 500 processors (DH-485 channel)	1747-C10	1747-C11 1747-C20
1747-AIC Isolated Link Coupler	SLC 500 processors (DH-485 channel)	1747-C11	1747-C10 1747-C13 1747-C20
1747-KE DH-485/RS-232C interface module 1746-BAS BASIC module	1747-AIC Isolated Link Coupler	1747-C13	1747-C11 1747-C10
1746-*xx*32 32 point I/O modules	1492-IFM40*x*	1492-CABLE*x*H	-
SLC 5/03 processor (RS-232 channel 0) SLC 5/04 processor (RS-232 channel 0) SLC 5/05 processor (RS-232 channel 0)	Personal computer serial port (9-Pin DTE) 1747-UIC RS-232 port	1747-CP3	-
1746-I/O	1492-IFM*xx* interface modules	1492-CABLE*xx*	-
1747-SN Remote I/O Scanner 1747-DCM Direct Communication Module 1747-ASB SLC Remote I/O Adapter module SLC 5/04 processors (1747-L541, 1747-542, and 1747-543)	Remote I/O network	Belden 9463	-
1747-AIC Isolated Link Coupler 1770-KF3 DH-485 communication interface	1747-AIC Isolated Link Coupler	Belden 9842 or 3106A	-
1747-UIC RJ-485 port	SLC 500 processors (DH-485 channel)	1747-C13	-

Replacement Terminal Blocks

Description	Cat. No.
Replacement Terminal Block (Blue) - Used with dc I/O modules, catalog numbers 1746-IB16, 1746-IC16, 1746-IH16, 1746-IV16, 1746-OBP8, 1746-OB16, 1746-OB16E, 1746-OBP16, 1746-OVP16 1746-OV16, 1746-IN16, 1746-IG16, 1746-1746OG16	1746-RT25B
Replacement Terminal Block (Orange) - Used with relay output modules, catalog numbers 1746-OW16, 1746-OX8	1746-RT25C
Replacement Terminal Block (Green) - Used with Specialty I/O modules, catalog numbers 1746-HSCE, 1746-IO12, 1746-NR4, 1746-NI8	1746-RT25G
Replacement Terminal Block (Red) - Used with ac I/O modules, catalog numbers 1746-IA16, 1746-OA16, 1746-IM16, 1746-OAP12	1746-RT25R
Replacement Terminal Block - 2-position terminal block used with analog outputs, catalog numbers 1746-NO4I, 1746-NO4V	1746-RT26
Replacement Terminal Block - 8-position terminal block used with analog outputs, catalog numbers 1746-NO4I, 1746-NO4V	1746-RT27
Replacement Terminal Block - Used with analog input modules, catalog numbers 1746-NI4, 1746-NIO4I, 1746-NIO4V, 1746-FIO4I, 1746-FIO4V	1746-RT28
Replacement Terminal Block - Used with RIO Communication modules, catalog numbers 1747-SN, 1746-DSN, 1746-DCM	1746-RT29
Replacement Terminal Block - 6-position DH-485 plug/connector; used with DH-485 Link Coupler, catalog number 1747-AIC and Advanced Interface Converter, catalog number 1761-NET-AIC	1746-RT30
Replacement Terminal Block - used with SLC 500 Remote I/O Adapter module, catalog number 1747-ASB	1746-RT31
Replacement Terminal Block - used with Thermocouple/mV module, catalog number 1746-NT4	1746-RT32
Replacement Terminal Block - 3-position DH+ connector; used with SLC 5/04 processors, catalog numbers 1747-L541, 1747-L542, -L542P, 1747-L543	1746-RT33
Replacement Terminal Block (Green) - used with Thermocouple/mV Input module, catalog number 1746-NT8	1746-RT34
Replacement Terminal Block (Green) - used with RTD/resistance Input module, catalog number 1746-NR8	1746-RT35

Other Replacement Hardware

Description	Cat. No.
Replacement Fuses — Five fuses per package. Orders must be for multiples of five.	-
Catalog number for 1746-P1 power supply.	1746-F1
Catalog number for 1746-P2 power supply.	1746-F2
Catalog number for 1746-P3 power supply.	1746-F3
Fixed I/O ac units, MDL 1.25 Ampere.	1746-F4
Fixed I/O dc units, MDL 1.6 Ampere.	1746-F5
Catalog numbers for 1746-OBP16 and 1746-OVP16 output modules.	1746-F8
Catalog numbers for 1746-OAP12 output module.	1746-F9

Description	Cat. No.
Modular Card Slot Fillers - Two fillers per package. Orders must be for multiples of two.	1746-N2
Connector - Mating connector for 32-point user-made cable.	1746-N3
Kit consisting of 4 replacement terminal covers and labels for 4, 8, 16 I/O modules.	1746-R9
Replacement Covers and Labels - Two covers per package. Orders must be for multiples of two covers.	-
Catalog number for 1746-P1.	1746-R10
Catalog numbers for 1746-P2 and 1746-P3 power supplies.	1746-R11
SLC 5/01 and SLC 5/02 processors.	1746-R12
Specialty I/O.	1746-R13
SLC 5/03, SLC 5/04, and SLC 5/05 processor.	1746-R14
Catalog number for 1747-ASB module.	1746-R16
Replacement Fuse Holder for catalog number 1746-OAP12. Two fuse holders per package. Orders must be for multiples of two. (Price is per holder.)	1746-R17
Replacement Retainer Clips - Four clips per package. Orders must be for multiples of four.	1746-R15
Replacement Remote I/O Address Labels: Includes five labels for remote PLC system and five labels for remote SLC system.	1746-RL35
Replacement Octal Label Kit - Kit includes one octal status indicator label and one door label module.	-
for 1746-IA16 module	1746-RL40
for 1746-IB16 module	1746-RL41
for 1746-IG16 module	1746-RL42
for 1746-IM16 module	1746-RL43
for 1746-IN16 module	1746-RL44
for 1746-IV16 module	1746-RL45
for 1746-ITB16 module	1746-RL46
for 1746-ITV16 module	1746-RL47
for 1746-OA16 module	1746-RL50
for 1746-OB16 module	1746-RL51
for 1746-OG16 module	1746-RL52
for 1746-OV16 module	1746-RL53
for 1746-OW16 module	1746-RL54
for 1746-OBP16 module	1746-RL55
for 1746-OVP16 module	1746-RL56
for 1746-OAP12 module	1746-RL57
for 1746-IC16 module	1746-RL58
for 1746-IH16 module	1746-RL59
for 1746-IB32 module	1746-RL60
for 1746-IV32 module	1746-RL61
for 1746-OB32 and 1746-OB32E module	1746-RL70

Description	Cat. No.
for 1746-OV32 module	1746-RL71
for 1746-OB16E module	1746-RL72
Lithium Battery Assembly. This is an optional part used for the SLC 500 fixed and modular hardware style processors and the Hand-held Terminal. Refer to product documentation for proper storage and handling instructions. For disposal information, consult your nearest Rockwell Automation Sales Office.	1747-BA
Replacement Keys for the SLC 5/03, SLC 5/04, and SLC 5/05 processors.	1747-KY1

Notes:

Specifications

This appendix provides the specifications for the SLC 500 processors as well as the SLC power supplies.

SLC 500 System General Specifications

The table below lists SLC 500 system test specifications.

Attribute	Value	Industry Standard
Temperature, operating	0 °C...60 °C (32 °F...140 °F)	Not applicable
Temperature, storage	-40 °C...85°C (-40 °F...185 °F)	Not applicable
Humidity	5 to 95% without condensation	Not applicable
Vibration, operating	2.5 g at 5...2000 Hz	Not applicable
Vibration, non-operating	5 g at 5...2000 Hz	Not applicable
Shock, operating	all modules except relay contact 30.0 g (3 pulses, 11 ms)	Not applicable
Shock, operating	relay contact modules - OW, OX, IO combo 10.0 g (3 pulses, 11 ms)	Not applicable
Shock, non-operating	50.0 g (3 pulses, 11 ms)	Not applicable
Free fall (drop test)	Portable, 2.268 kg (5 lb) or less at 0.762 m (30 in.) (six drops)	Not applicable
	Portable, 2.268 kg (5 lb) or more at 0.1016 m (4 in.) (three flat drops)	Not applicable
Safety	Dielectric withstand: 1500V ac	UL 508, CSA C22.2 No. 142
	Isolation between communication circuits: 500V dc	Not applicable
	Isolation between backplane and I/Os: 1500V ac	Not applicable
	Flammability and electrical ignition: UL94V-0	Not applicable
Certification	UL listed to US and Canadian Safety Standards Class I, Groups A, B, C or D, Division 2 CE compliant for all applicable directives C-Tick marked for all applicable acts	Not applicable

Processor General Specifications

The table below lists general specifications for SLC 500 modular processors.

Attribute (1747-)	SLC 5/01		SLC 5/02	SLC 5/03			SLC 5/04			SLC 5/05		
	L511	L514	L524	L531	L532	L533	L541	L542	L543	L551	L552	L553
Program memory (words)	1 K	4 K	4 K	8 K	16 K	32 K	16 K	32 K	64 K	16 K	32 K	64 K
I/O capacity	3940 discrete		4096 discrete									
Remote I/O capacity	Not applicable		Processor memory and chassis power limit up to 4096 inputs and 4096 outputs									
Chassis/slots, max	3 Chassis/30 Slots of I/O											
Standard RAM	Capacitor - 2 weeks[2] optional lithium battery - 5 years Lithium battery 2 years Capacitor - 30 minutes minimum											
Memory back-up options	EEPROM			Flash EPROM								
Status indicators	Run CPU Fault Forced I/O Battery Low		Run CPU Fault Forced I/O Battery Low COMM	Run CPU Fault Forced I/O Battery Low RS-232 DH-485			Run CPU Fault Forced I/O Battery Low RS-232 DH+			Run CPU Fault Forced I/O Battery Low RS-232 Ethernet		
Power supply loading	90 mA at 5V dc			500 mA at 5V dc			1A at 5V dc			1A at 5V dc		
	0 mA at 24V dc			175 mA at 24V dc			0 mA at 24V dc[4]			0 mA at 24V dc		
Clock/calendar accuracy[1]	Not applicable			±54 sec./month at 25 °C (77 °F); ±81 sec./month at 60 °C (140 °F)								
Program scan hold-up time after loss of power	20 ms...3 s (dependent on power supply loading)											
Noise immunity	NEMA Standard ICS 2-230											
Temperature rating	operating: 0 °C...60 °C (32 °F...140°F); storage: -40 °C...85 °C (-40 °F...185 °F)											
Humidity	5 to 95% without condensation											
Shock, operating	30 g											
Vibration	Displacement:.015 in., peak-to-peak at 5...57 Hz											
	Acceleration: 2.5 g at 57...2000 Hz											

Attribute (1747-)	SLC 5/01		SLC 5/02	SLC 5/03			SLC 5/04			SLC 5/05		
	L511	L514	L524	L531	L532	L533	L541	L542	L543	L551	L552	L553
Certification (when product is marked)	UL Listed Industrial Control Equipment for Class I, Division 2, Groups A, B, C, D Hazardous Locations											
	C-UL Listed Industrial Control Equipment for Class I, Division 2, Groups A, B, C, D Hazardous Locations											
	CE(3) European Union 89/336/EEC EMC Directive, compliant with: EN 50082-2 Industrial Immunity EN 50081-2 Industrial Emissions or EN 61000-6-2 Industrial Immunity EN 61000-6-4 Industrial Emissions European Union 73/23/EEC LVD Directive, compliant with safety related portions of: EN61131-2 Programmable Controllers											
	C-Tick, Australian Radio Communications Act, compliant with: AS/NZS 2064 Industrial Emissions											

(1) RTC should not be relied upon for time-based periodic control. Use STI subroutine for periodic control.

(2) See Capacitor Memory Backup vs. Temperature Curve.

(3) See the Product Certification link at http://ab.com for Declarations of Conformity, Certificates, and other certification details.

(4) SLC 5/04 processors manufactured prior to April 2002 draw 200 mA at 24V dc. Check your label to verify your processor's current draw.

Power Supply Specifications

This section provides specifications for the SLC 500 power supplies.

1746-P1, 1746-P2, 1746-P3, and 1746-P4 Power Supplies

Attribute	Value			
	1746-P1	1746-P2	1746-P3	1746-P4
Line voltage	85...132/170...265V ac, 47...63 Hz		19.2....28.8V dc	85...132/170...265V ac 47...63 Hz
Typical line power requirement	135VA	180VA	90VA	240VA
Inrush current, max	20 A			45 A
Internal current capacity	2 A at 5V dc 0.46 A at 24V dc	5 A at 5V dc 0.96 A at 24V dc	3.6 A at 5V dc 0.87 A at 24V dc	10.0 A at 5V dc 2.88 A at 24V dc(10)
Fuse protection(1)	1746-F1 or equivalent(5) (6)	1746-F2 or equivalent(5) (8)	1746-F3 or equivalent(5) (9)	Fuse is soldered in place
24V dc user-power current capacity	200 mA		not applicable	1 A(1)
24V dc user-power voltage range	18...30V dc			20.4...27.6V dc
User-supplied overcurrent protection, max(2)	15 A		not applicable	15 A
Ambient temperature, operating	0 °C...60 °C (32 °F...140 °F) Current capacity is derated 5% above 55 °C (131°F)			0 °C...60 °C (32 °F...140 °F) no derating
Isolation(3)	1800V ac RMS for 1 s		600v ac rms for 1 s	2600V dc for 1 s

Attribute	Value			
	1746-P1	1746-P2	1746-P3	1746-P4
CPU hold-up time[4]	20 ms (full load) 3000 ms (no load)		5 ms (full load) 1000 ms (no load)	20 ms (full load) 3000 ms (no load)
Certification (when product is marked)	UL Listed Industrial Control Equipment for Class I, Division 2, Groups A, B, C, D Hazardous Locations			UL Listed Industrial Control Equipment
	C-UL Listed Industrial Control Equipment for Class I, Division 2, Groups A, B, C, D Hazardous Locations			CSA Certified Process Control Equipment for Class I, Div 2, Groups A, B, C, D Hazardous Locations
	CE[7] European Union 89/336/EEC EMC Directive, compliant with: EN 50082-2 Industrial Immunity EN 50081-2 Industrial Emissions or EN 61000-6-2 Industrial Immunity EN 61000-6-4 Industrial Emissions European Union 73/23/EEC LVD Directive, compliant with safety related portions of: EN61131-2 Programmable Controllers			
	C-Tick, Australian Radio Communications Act, compliant with: AS/NZS 2064 Industrial Emissions			

(1) Power supply fuse is to guard against fire hazard due to short-circuit conditions. Fuse may not protect the supply from miswiring or excessive transient in the power line.

(2) Use time-delay type overcurrent protection in all ungrounded conductors.

(3) Isolation is between input terminals and backplane.

(4) CPU hold-up time is for 0V unless specified. Hold-up time is dependent on power supply loading.

(5) Fuse sizes specified are for end-devices only. Fuse size may need to be reduced depending on the size of circuit wiring.

(6) Equivalent fuses: 250V-3A fuse, nagasawa ULCS-61ML-3, or BUSSMAN AGC 3.

(7) See the Product Certification link at http://ab.com for Declarations of Conformity, Certificates, and other certification details.

(8) Equivalent fuse: 250V-3A fuse, SANO SOC SD4, or BUSSMAN AGC 3.

(9) Equivalent fuse: 125V-5A fuse, LITTLEFUSE 223.

(10) The combination of all output power (5 volt backplane, 24 volt backplane, and 24 volt user source) cannot exceed 70 watts.

1746-P5, 1746-P6, and 1746-P7 Power Supplies

Attribute	Value			
	1746-P5	1746-P6	1746-P7	
Line voltage	90-146V dc	30-60V dc	10-30V dc[5]	
Typical line power requirement	85VA	100VA	12V dc input: 50VA	24V dc input: 75VA
Inrush current, max	20A		20 A (required for turn-on)	
Internal current capacity	5 A at 5V dc 0.96 A at 24V dc		12V dc input: 2.0 A at 5V dc 0.46 A at 24V dc	24V dc input: 3.6 A at 5V dc 0.87 A at 24V dc
			See P7 current capacity chart	
Fuse protection[1]	Fuse is soldered in place			
24V dc user-power current capacity	200 mA		not applicable	
24V dc user-power voltage range	18-30V dc			
Ambient temperature, operating	0 °C...60 °C (32 °F...140 °F) Current capacity is derated 5% above 55 °C (131°F)			
Isolation[2]	1800V ac RMS for 1 s		600V ac RMS for 1 s	
CPU hold-up time[3]	20 ms (full load) 3000 ms (no load)	5 ms (full load) 1500 ms (no load)	12V dc input: 1.37 ms at 0V dc (full load) 895 ms at 0V dc (no load) 10 ms at 9V dc (full load) continuous at 9V dc (no load)	24V dc input: 40 ms at 0V dc (full load) 1860 ms at 0V dc (no load) 790 ms at 11V dc (full load) continuous at 11V dc (no load)
Certification (when product is marked)	UL Listed Industrial Control Equipment for Class I, Division 2, Groups A, B, C, D Hazardous Locations			
	C-UL Listed Industrial Control Equipment for Class I, Division 2, Groups A, B, C, D Hazardous Locations			
	CE[4] European Union 89/336/EEC EMC Directive, compliant with: EN 50082-2 Industrial Immunity EN 50081-2 Industrial Emissions or EN 61000-6-2 Industrial Immunity EN 61000-6-4 Industrial Emissions European Union 73/23/EEC LVD Directive, compliant with safety related portions of: EN61131-2 Programmable Controllers			
	C-Tick Australian Radio Communications Act, compliant with: AS/NZS 2064 Industrial Emissions			

(1) Power supply fuse is intended to guard against fire hazard due to short-circuit conditions. This fuse may not protect the supply from miswiring or excessive transient in the power line.

(2) Isolation is between input terminals and backplane.

(3) CPU hold-up time is for 0V unless specified. Hold-up time is dependent on power supply loading.

(4) See the Product Certification link at http://ab.com for Declarations of Conformity, Certificates, and other certification details.

(5) See page 70 for information on power supply under voltage operation.

Setting Up the DH-485 Network

The information in this appendix will help you plan, install, and operate the SLC 500 processor in a DH-485 network. This chapter also contains information that describes the DH-485 network functions, network architecture, and performance characteristics. It also covers:

- DH-485 network description.
- DH-485 network protocol.
- DH-485 token rotation.
- DH-485 network initialization.
- devices that use the DH-485 network.
- 1747-AIC isolated link coupler for DH-485.
- 1747-UIC USB to DH-485 interface converter.
- example system configuration (includes 1761-NET-AIC advanced interface converter).
- important planning considerations.
- installing the DH-485 network.

DH-485 Network Description

The DH-485 network passes information between devices on the plant floor. The network monitors process parameters, device parameters, device status, process status and application programs to support data acquisition, data monitoring, program upload/download and supervisory control.

The DH-485 network offers:

- interconnection of 32 devices.
- multi-master capability.
- token passing access control.
- the ability to add or remove nodes without disrupting the network.
- maximum network length of 1219 m (4000 ft).[1]

The following section describes the protocol used to control message transfers on the DH-485 network. The protocol supports two classes of devices: initiators and responders. All initiators on the network get

[1] The network can be extended to 2438 m (8000 ft) by connecting two AIC+ Advanced Interface Converters (1761-NET-AIC). Refer to the AIC+ Advanced Interface Converter User Manual, publication 1761-UM004.

a chance to initiate message transfers. To determine which initiator has the right to transmit, a token passing algorithm is used.

DH-485 Network Protocol

A node holding the token can send any valid packet onto the network. Each node is allowed only one transmission (plus two retries) each time it receives the token. After a node sends one message packet, it attempts to give the token to its successor by sending a token pass packet to its successor.

DH-485 Token Rotation

If no network activity occurs, the initiator sends the token pass packet again. After two retries (a total of three tries) the initiator will attempt to find a new successor.

IMPORTANT The maximum address that the initiator will search for before wrapping to zero is the value in the configurable parameter maximum node address. The default value for this parameter is 31 for all initiators and responders.

The allowable range of the node address of a initiator is 0...31. The allowable address range for all responders is 1...31. There must be at least one initiator on the network.

DH-485 Network Initialization

Network initialization begins when a period of inactivity exceeding the time of a link dead timeout is detected by a initiator on the network. When the time for a link dead timeout is exceeded, usually the initiator with the lowest address claims the token. When a initiator has the token it will begin to build the network. The network requires at least one initiator to initialize it.

Building a network begins when the initiator that claimed the token tries to pass the token to the successor node. If the attempt to pass the token fails, or if the initiator has no established successor (for example, when it turns on), it begins a linear search for a successor starting with the node above it in the addressing.

When the initiator finds another active initiator, it passes the token to that node, which repeats the process until the token is passed all the way around the network to the first node. At this point, the network is in a state of normal operation.

Devices that Use the DH-485 Network

The following SLC 500 devices support the DH-485 network.

- SLC 500 fixed I/O controller (responder)
- SLC 5/01 modular I/O controller (responder)
- SLC 5/02 modular I/O controller (initiator/responder)
- SLC 5/03 modular I/O controller (initiator/responder)
- SLC 5/04 modular I/O controller (initiator/responder)
- SLC 5/05 modular I/O controller (initiator/responder)
- Personal computer running your programming software (initiator)
- DTAM (initiator/responder)

Other devices that use the DH-485 network include those in the table below.

Devices Available For Use on the DH-485 Network

Cat. No.	Description	Installation Requirement	Function	Publication Number
1746-BAS(-T)	BASIC module	SLC chassis	Provides an interface for SLC 500 devices to third party devices. Program in BASIC to interface the 3 channels (2 RS232 and 1 DH485) to printers, modems, or the DH-485 network for data collection.	1746-UM004 1746-RM001 1746-IN009
1747-KE	DH-485/DF1 interface module	SLC chassis	Provides a non-isolated DH-485 interface for SLC 500 devices to host computers over RS-232 using full- or DF1 half-duplex protocol. Enables remote programming using your programming software to an SLC 500 processor or the DH-485 network through modems. Ideal for low cost RTU/SCADA applications.	1747-IN006
1747-UIC	USB to DH-485 interface converter	Standalone	Provides connection to personal computer's USB port and features an RS-232 and an RS-485 port for connection to SLC 500 controllers.	1747-IN063
ControlLogix Gateway	DH+/DH485 gateway	Standalone	Provides communication between stations on the PLC-5 (DH+) and SLC 500 (DH-485) networks. Enables communication and data transfer from PLC to SLC 500 on DH-485 network. Also enables programming software programming or data acquisition across DH+ to DH-485.	1756-UM513
1784-PCMK	PCMCIA interface card	PCMCIA slot in computer	Provides DH485 or DH+ connection.	1784-UM519
1784-PKTX(D)	personal computer DH-485 interface card	PCI bus	Provides DH-485 or DH+ connection	1784-UM527

1747-AIC Isolated Link Coupler for DH-485

The isolated link coupler, catalog number 1747-AIC, is used to connect SLC 500 family devices to the DH-485 network. The coupler provides a 6-position removable terminal block for connection to the DH-485 communication cable.

Network connections for SLC 500 processors are provided by the 1747-C11 cable, supplied with the link coupler. Network connections for peripheral devices, such as the personal interface converter, catalog number1747-PIC, or Data Table Access Module, catalog number, 1747-DTAM-E are provided by the 1747-C10 cable supplied with each of those devices. If you need to connect a peripheral device that is between 1.8 m (6 ft) and 6.1 m (20 ft) away, use the 1747-C20 cable.

To protect connected devices, the coupler provides 1500V dc isolation between the communication cable and the attached SLC 500 controller and peripheral devices (PIC or DTAM).

The isolated link coupler can also be used to provide connectivity between a peripheral device (programming software and PIC or DTAM) for distances greater than 1.8 m (6 ft) up to a maximum of 1219 m (4000 ft). Below is an example of a remote connection between a computer running your programming software and an SLC 500 processor.

Remote Connection

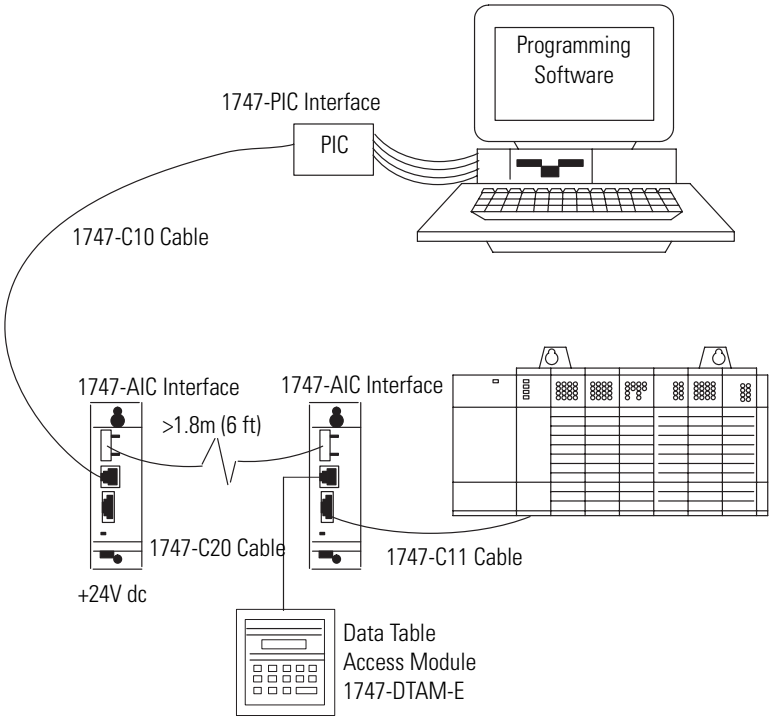

1747-UIC USB to DH-485 Interface Converter

The 1747-UIC interface lets you connect DH-485 devices directly to a computer's USB port. It features an RS-232 port for connection to SLC 5/03 and later processors, MicroLogix processor, PanelView 300 and later terminals, 1761-NET-AIC+ interface, and Logix controllers, as well as an RS-485 port for connection to SLC 5/03 and lower processors, PanelView 300 and later terminals, and 1747-AIC interface. The 1747-UIC interface can communicate with devices on the DH-485 network at 19.2 Kbaud.

Connecting to the RS-232 Port

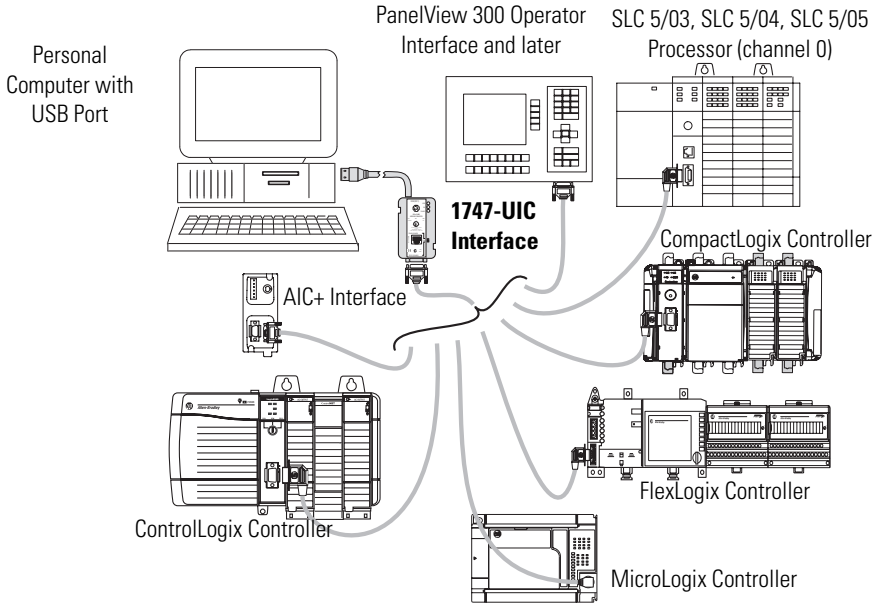

Connect the following DH-485 equipment to the RS-232 port	Using cable
SLC 5/03, SLC 5/04, and SLC 5/05 processor (channel 0)	1747-CP3, 1756-CP3
1761-NET-AIC (AIC+) Advanced Interface Converter	1747-CP3, 1756-CP3 (Port 1, 9-pin D) 1761-CBL-PM02 (Port 2, 8-pin DIN)
PanelView 300 and later operator interface with RS-232 (DH-485) port	2711-NC13
MicroLogix controller PanelView 300 Micro (DH-485) operator interface	1761-CBL-PM02
CompactLogix controller	1747-CP3, 1756-CP3
FlexLogix controller	1747-CP3, 1756-CP3
ControlLogix controller	1747-CP3, 1756-CP3

Connecting to the RS-485 Port

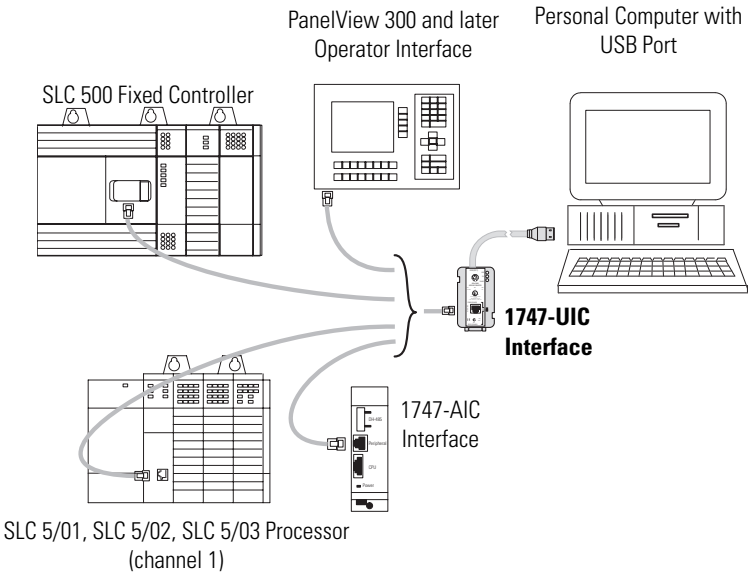

Connect the following DH-485 equipment to the RS-485 port	Using cable
SLC 500 fixed controller	1747-C13
SLC 5/01, SLC 5/02, and SLC 5/03 (channel 1) processor	
1747-AIC Isolated Link Coupler	
PanelView 300 and later with DH-485 port operator interface	1747-C10

Example System Configuration

Below is an example of a DH-485 network.

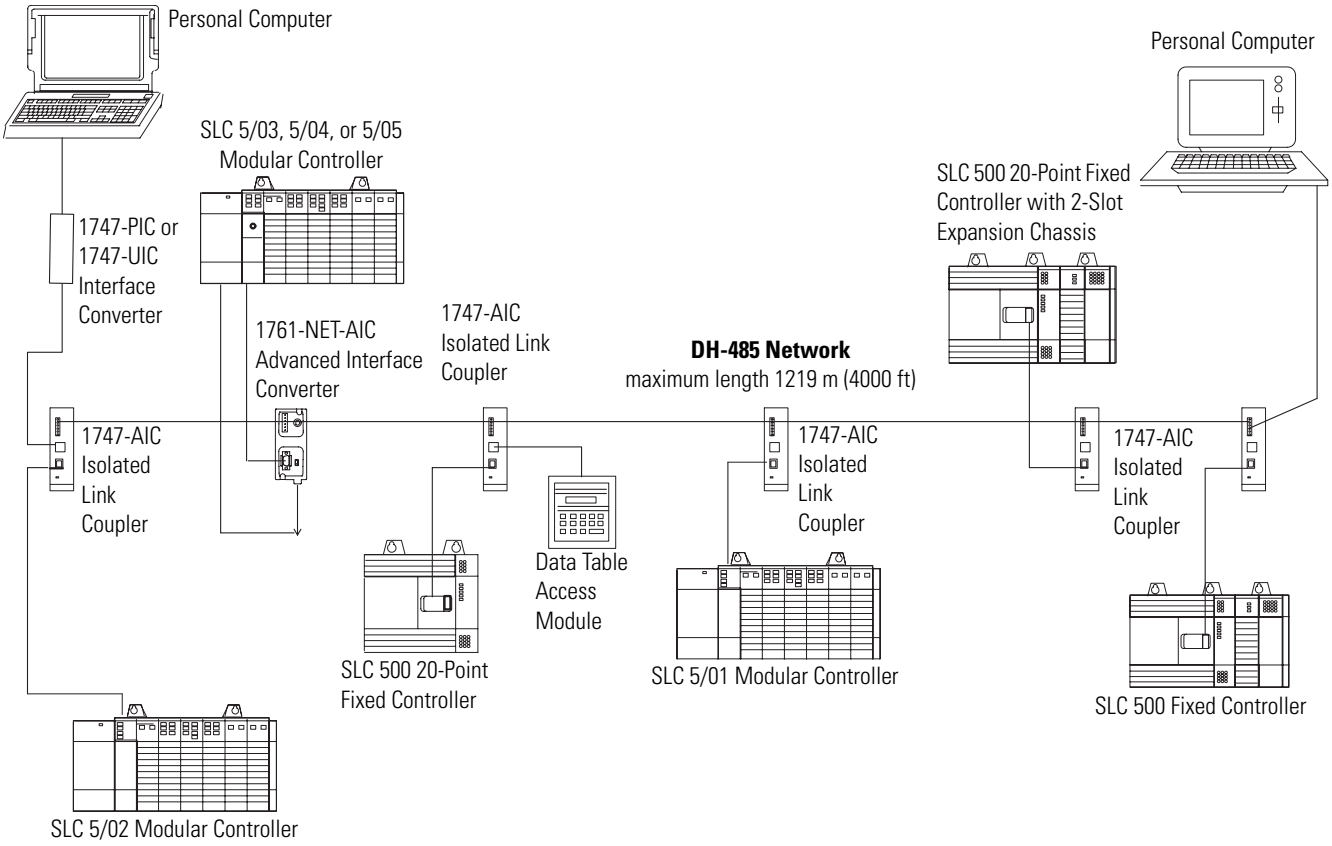

Configuring the SLC 5/03, SLC 5/04, and SLC 5/05 Channel 0 for DH485 Protocol

The RS-232 port (channel 0) of the SLC 5/03, SLC 5/04, and SLC 5/05 processor can be configured for DH485 protocol. Refer to your programming software user manual for software configuration information.

You can connect channel 0 of the SLC 5/03, SLC 5/04, and SLC 5/05 processors to a DH485 network using the 1747-CP3 cable and a 1761-NET-AIC Advanced Interface Converter (AIC+). In this case, the AIC+ must be powered with 24V dc. The 1746-P1, 1746-P2, 1746-P4, 1746-P5, and 1746-P6 power supplies provide 24V dc user power which may be used to power the AIC+.

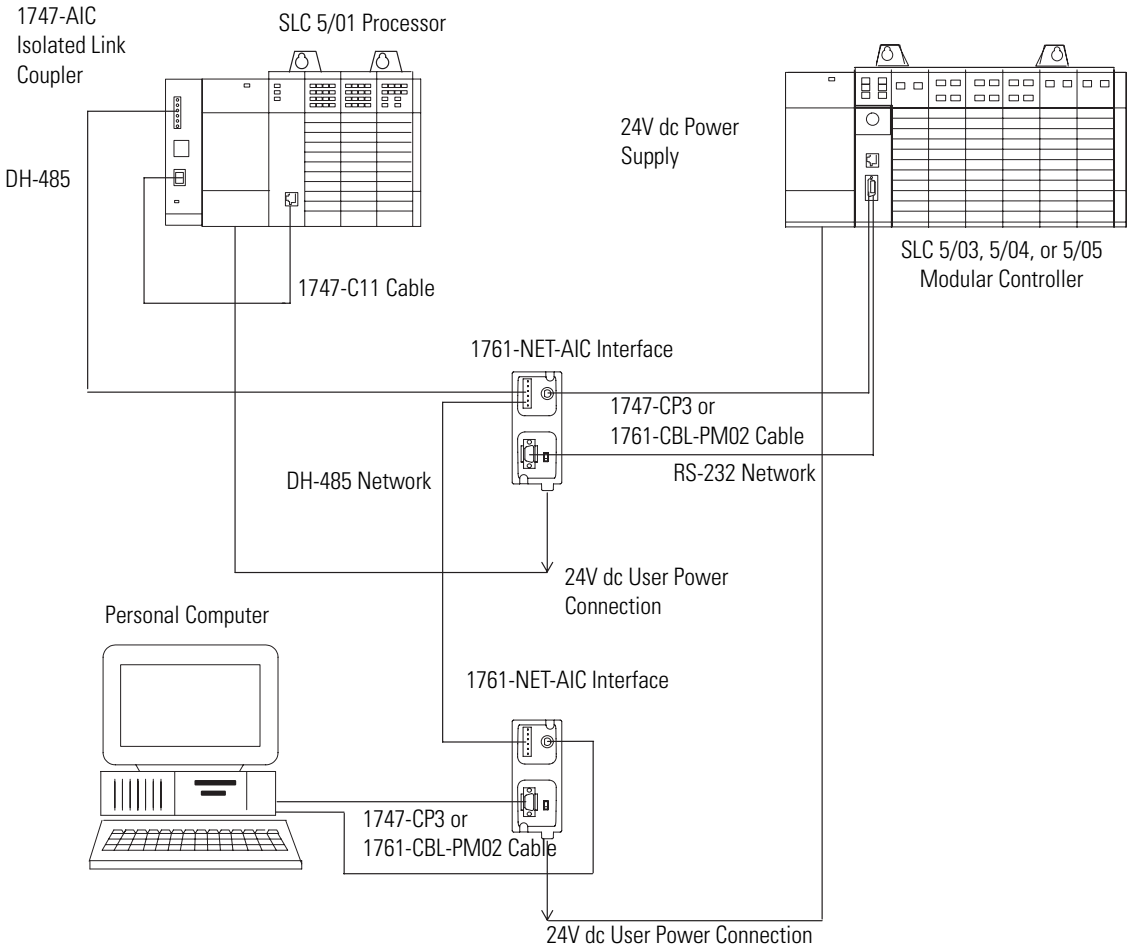

Important Planning Considerations

Carefully plan your network configuration before installing any hardware. Listed below are some of the factors that can affect system performance:

- Amount of electrical noise, temperature, and humidity in the network environment
- Number of devices on the network
- Connection and grounding quality in installation
- Amount of communication traffic on the network
- Type of process being controlled
- Network configuration

The major hardware and software issues you need to resolve before installing a network are discussed in the following sections.

Hardware Considerations

You need to decide the length of the communication cable, where you will route it, and how to protect it from the environment where it will be installed.

When the communication cable is installed, you need to know how many devices are to be connected during installation and how many devices will be added in the future. The following sections will help you understand and plan the network.

Number of Devices and Length of Communication Cable

You must install a 1747-AIC link coupler for each node on the network. If you plan to add nodes later, provide additional link couplers during the initial installation to avoid recabling after the network is in operation.

The maximum length of the communication cable is 1219 m (4000 ft). This is the total cable distance from the first node to the last node on the network.

Planning Cable Routes

Follow these guidelines to help protect the communication cable from electrical interference.

- Keep the communication cable at least 1.52 m (5 ft) from any electric motors, transformers, rectifiers, generators, arc welders, induction furnaces, or sources of microwave radiation.
- If you must run the cable across power feed lines, run the cable at right angles to the lines.
- If you do not run the cable through a contiguous metallic wireway or conduit, keep the communication cable at least 0.15 m (6 in.) from ac power lines of less than 20 A, 0.30 m (1 ft) from lines greater than 20 A, but only up to 100 k VA, and 0.60 m (2 ft) from lines of 100 k VA or more.
- If you run the cable through a contiguous metallic wireway or conduit, keep the communication cable at least 0.08 m (3 in.) from ac power lines of less than 20 A, 0.15 m (6 in.) from lines greater than 20 A, but only up to 100 k VA, and 0.30 m (1 ft) from lines of 100 k VA or more.

  Running the communication cable through conduit provides extra protection from physical damage and electrical interference. If you route the cable through conduit, follow these additional recommendations:

  – Use ferromagnetic conduit near critical sources of electrical interference. You can use aluminum conduit in non-critical areas.
  – Use plastic connectors to couple between aluminum and ferromagnetic conduit. Make an electrical connection around the plastic connector (use pipe clamps and the heavy gauge wire or wire braid) to hold both sections at the same potential.
  – Ground the entire length of conduit by attaching it to the building earth ground.
  – Do not let the conduit touch the plug on the cable.
  – Arrange the cables loosely within the conduit. The conduit should contain only serial communication cables.
  – Install the conduit so that it meets all applicable codes and environmental specifications.

For more information on planning cable routes, see Industrial Automation Wiring and Grounding Guidelines, publication 1770-4.1.

Software Considerations

Software considerations include the configuration of the network and the parameters that can be set to the specific requirements of the network. The following are major configuration factors that have a significant effect on network performance.

- Number of nodes on the network
- Addresses of those nodes
- Communication rate
- Maximum node address selection
- **SLC 5/03, SLC 5/04, and SLC 5/05 processors only** - token hold factor
- Maximum number of communicating devices

The following sections explain network considerations and describe ways to select parameters for optimum network performance (speed).

Number of Nodes

The number of nodes on the network directly affects the data transfer time between nodes. Unnecessary nodes (such as a second programming terminal that is not being used) slow the data transfer rate. The maximum number of nodes on the network is 32.

Setting Node Addresses

The best network performance occurs when node addresses start at 0 and are assigned in sequential order. SLC 500 processors default to node address 1. The node address is stored in the processor status file (S:15L). Processors cannot be node 0. Also, initiators such as personal computers should be assigned the lowest numbered addresses to minimize the time required to initialize the network.

Setting Processor Communication Rate

The best network performance occurs at the highest communication rate. All devices must be at the same communication rate. The communication rate is stored in the processor status file (S:15H).

Maximum Node Address Setting

The maximum node address parameter should be set as low as possible. This minimizes the amount of time used in soliciting successors when initializing the network. If all nodes are addressed in sequence from 0, and the maximum node address is equal to the address of the highest addressed node, the token rotation will improve by the amount of time required to transmit a solicit successor packet plus the slot timeout value.

Note that this does not allow any node to be added to the network without affecting the response time. On the other hand, since the time required to hold an open station address is greater than the time required to pass a token, it can be useful to leave a temporary device (such as a personal computer) connected if there is only one such device. (A solicit successor packet requires the same transmission time as the token pass, but there is an added slot timeout period.)

See your programming software user manual for the procedures to set node addresses, processor communication rate, and maximum node addresses.

IMPORTANT The SLC 500 series A (only) processors set the maximum node address to 31 when power is cycled increasing initialization and response time of the network.

Maximum Number of Communicating Devices

SLC 500 fixed and SLC 5/01 processors can be selected by two initiators maximum at the same time. Using more than two initiators to select the same SLC 500 fixed and SLC 5/01 processors at the same time can cause communication timeouts.

Installing the DH-485 Network

To install a DH-485 network, you will need tools to strip the shielded cable and to attach the cable and terminators to the Isolated Link Coupler.

Install the DH-485 network using the following tools (or equivalent).

Description	Part Number	Manufacturer
Shielded twisted pair cable	Belden #3106A or #9842	Belden
Stripping tool	45-164	Ideal Industries
1/8 in. slotted screwdriver	Not applicable	Not applicable

DH-485 Communication Cable and Isolated Link Coupler

The link coupler provides a connection for each node. The isolated link coupler electrically isolates the DH-485 communication interface from the processor and peripheral connections. Electrical-optical isolation is provided to 1500V.

The suggested DH-485 communication cable is Belden #3106A or #9842 cable. The cable is jacketed and shielded with two twisted wire pairs and a drain wire.

One pair provides a balanced signal line, and one wire of the other pair is used for a common reference line between all nodes on the network. The shield reduces the effect of electrostatic noise from the industrial environment on the network communication.

Installing the DH-485 Communication Cable

The communication cable consists of a number of cable segments daisy-chained together. The total length of the cable segments cannot exceed 1219 m (4000 ft).

When cutting cable segments, make them long enough to route them from one link coupler to the next with sufficient slack to prevent

strain on the connector. Allow enough extra cable to prevent chafing and kinking in the cable.

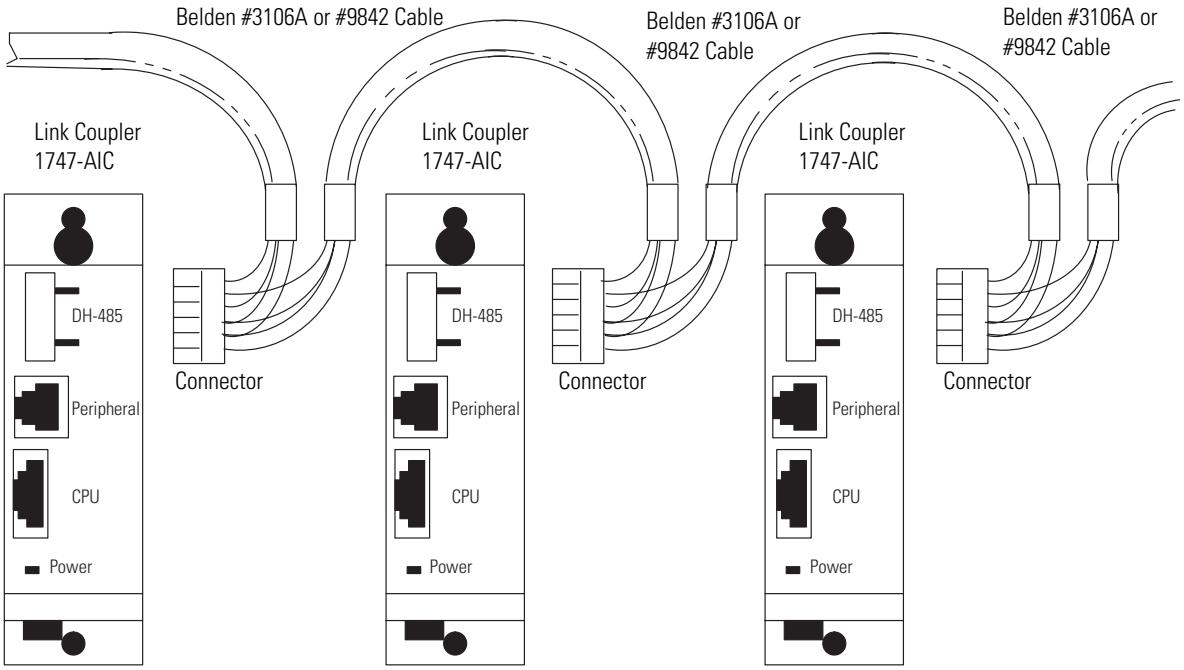

IMPORTANT A daisy-chained network is recommended as shown above. We do **not** recommend the following:

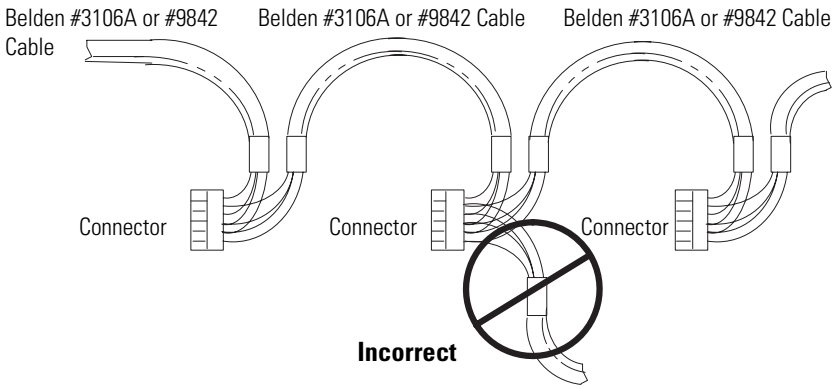

Connecting the Communication Cable to the Isolated Link Coupler

Attach the terminal block of the link coupler to the Belden #3106A or #9842 cable as shown below. Additional terminal blocks are available for replacement, see chapter 11.

Single Cable Connection

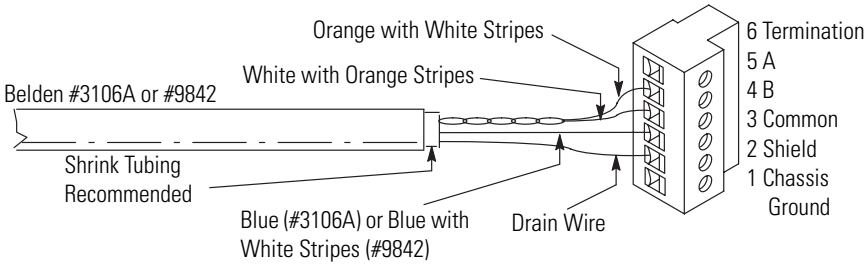

Multiple Cable Connection

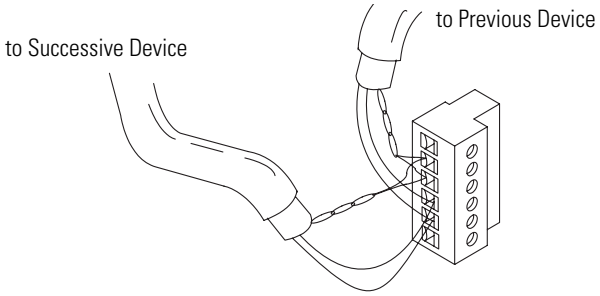

Wire/Terminal Connections for DH-485 Connectors for Belden #3106A

For this wire/pair	Connect this wire	To this terminal
Shield/drain	Non-jacketed	Terminal 2 - Shield
Blue	Blue	Terminal 3 - (Common)
White/drain	White with orange stripe	Terminal 4 - (Data B)
	Orange with white stripe	Terminal 5 - (Data A)

Wire/Terminal connections for DH-485 connectors for Belden #9842.

For this wire/pair	Connect this wire	To this terminal
Shield/drain	Non-jacketed	Terminal 2 - Shield
Blue/white	White with blue stripe	Cut back - no connection[1]
	Blue with white stripe	Terminal 3 - (Common)
White/orange	White with orange stripe	Terminal 4 - (Data B)
	Orange with white stripe	Terminal 5 - (Data A)

(1) To prevent confusion when installing the communication cable, cut back the white with blue stripe wire immediately after the insulation jacket is removed. This wire is not used by DH-485.

IMPORTANT In 1747-AIC interface series A, terminal 5 was called DATA B and terminal 4 was called DATA A. In this case, use terminal numbers only and ignore signal names DATA B and DATA A. The internal circuitry of the series A is the same as series B.

Grounding and Terminating the DH-485 Network

Only one of the link couplers at the end of the link must have Terminals 1 and 2 of the network connector jumpered together. This provides an earth ground connection for the shield of the communication cable.

Link couplers at both ends of the network must have terminals 5 and 6 of the link connectors jumpered together. This connects the termination impedance (of 120 Ω) that is built into each link coupler as required by the DH-485 specification. See the figure below for the proper jumpering.

End-of-line Termination

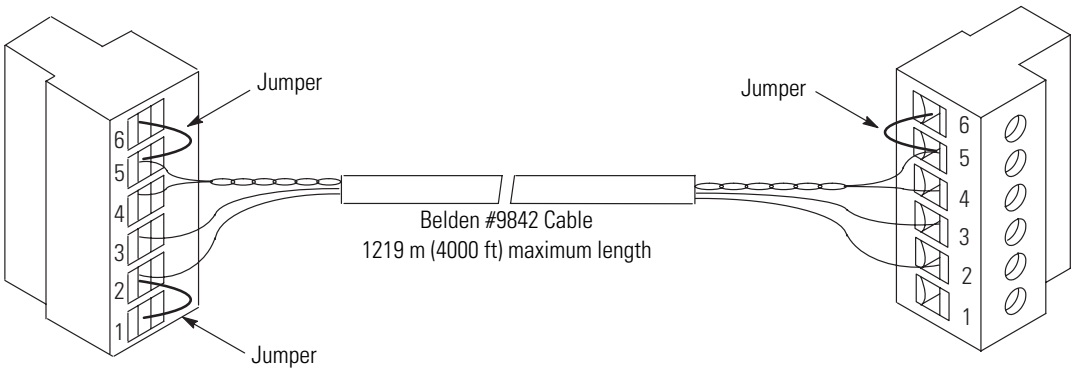

Powering the Link Coupler

In normal operation with the programmable controller connected to the link coupler, the processor powers both the link coupler and peripheral device (DTAM, PIC) if connected through the 1747-C11 cable.

If you do not connect the processor to the link coupler, then use a 24V dc power supply to power the link coupler and peripheral device. The 1747-AIC interface requires 85 mA at 24V dc. With a peripheral device connected, the total current required is 190 mA at 24V dc.

If both the processor and external power are connected to the link coupler, only the external source is used.

IMPORTANT Always connect the CHS GND (chassis ground) terminal to the nearest earth ground. This connection must be made whether or not an external 24V dc supply is used.

Below are three options for externally powering the 1747-AIC interface.

- If the link coupler is to be installed in an office environment, you can use the 1747-NP1 wall mount power supply or 1747-NP2 global desktop power supply. The link coupler would be powered through either the 1747-C10 cable or by hardwiring from the supply to the screw terminals on the link coupler.
- If you use any of the following chassis power supplies (1746-P1, 1746-P2, 1746-P4, 1746-P5, and 1746-P6), you can use the 24V dc user power supply (200 mA maximum) built into the power supply. The link coupler would be powered through a hard-wired connection from the screw terminals on the power supply to the screw terminals on the bottom of the link coupler.
- You can use an external dc power supply with the following specifications:
  - operating voltage: 24V dc ± 25%
  - output current: 190 mA
  - rated NEC

  The link coupler would be powered through a hard-wired connection from the external supply to the screw terminals on the bottom of the link coupler.

ATTENTION

If you use an external power supply, it must be 24V dc. Permanent damage will result if miswired with wrong power source.

The figure below shows the external wiring connections and specifications of the link coupler.

Link Coupler

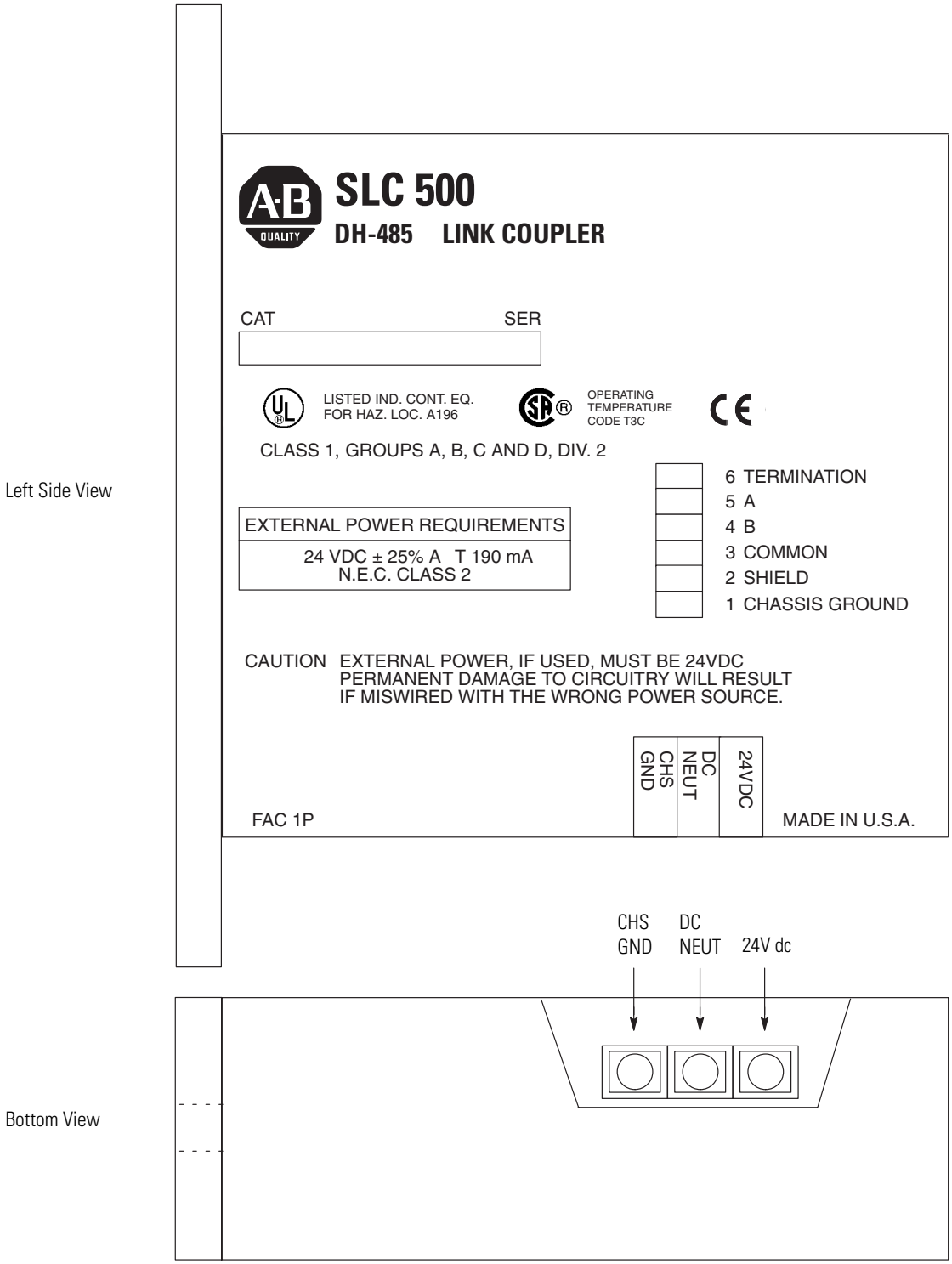

You can connect an unpowered link coupler to the DH-485 network without disrupting network activity. In addition, if an SLC 500 controller powers a link coupler that is connected to the DH-485 network, network activity will not be disrupted should the SLC 500 controller be removed from the link coupler.

Installing and Attaching the Link Couplers

- When installing the link coupler in an enclosure, use care so that the cable connecting the SLC 500 controller to the link coupler does not hit the enclosure door.
- Carefully plug the terminal block into the DH-485 port on the link coupler you are putting on the network. Allow enough cable slack to prevent stress on the plug.
- Provide strain relief for the cable after it is wired to the terminal block. This guards against breakage of the Belden cable wires.

Notes:

RS-232 Communication Interface

This appendix provides an overview of the RS-232 communication interface and explains how the SLC 5/03, SLC 5/04, and SLC 5/05 processors support it. This appendix also provides information on:

- RS-232 and SCADA applications.
- RS-232 communication interface overview.
- SLC 5/03, SLC 5/04, and SLC 5/05 processors and RS-232 communication.
- SLC 500 devices that support RS-232 communication.
- DF1 protocol and the SLC 5/03, SLC 5/04, and SLC 5/05 processors.
- Modbus RTU Master communication.
- ASCII communication.
- DF1 communication protocol modems overview.
- wiring connectors for RS-232 communication.
- applications for the RS-232 communication interface.

For online configuration procedures of the SLC 5/03, SLC 5/04, and SLC 5/05 processors for DF1 protocol, see your programming software user manual.

RS-232 and SCADA Applications

RS-232 is a communication interface included under SCADA (Supervisory Control and Data Acquisition) applications. SCADA is a term that refers to control applications that require communication over long distances. For more information about the use of Allen-Bradley equipment in SCADA applications, refer to the SCADA System Applications Guide, publication AG-UM008.

RS-232 Communication Interface Overview

RS-232 is an Electronics Industries Association (EIA) standard that specifies the electrical, mechanical, and functional characteristics for serial binary communication.

One of the benefits of RS-232 communication is that it lets you integrate telephone and radio modems into your control system. The distance over which you are able to communicate with certain system devices is virtually limitless.

The RS-232 channel on the SLC 5/03, SLC 5/04, and SLC 5/05 processors supports various protocols:

- Full-duplex DF1 (default)
- Half-duplex DF1 (SCADA)
- DH-485
- ASCII communication
- DF1 radio modem
- Modbus RTU Master

The SLC and PLC products detailed in this appendix that communicate over the RS-232 communication interface also use the DF1 serial communication protocol. DF1 protocol delimits messages, controls message flow, detects and signals errors, and retries after errors are detected.

SLC 5/03, SLC 5/04, and SLC 5/05 processors and RS-232 Communication

The SLC 5/03, SLC 5/04, and SLC 5/05 processors can communicate by means of the RS-232 communication port, channel 0. Channel 0 supports DF1 full-duplex protocol, DF1 half-duplex master and slave protocol, DH485 protocol, Modbus RTU Master communication, ASCII communication, and DF1 radio modem protocol. Refer to your programming software user manual for information on configuring the RS-232 communication port, channel 0.

The details of the DF1 protocols can be found in the DF1 Protocol and Command Set Reference Manual, Publication Number 1770-6.5.16.

Channel 0 provides a minimum of 500V dc isolation between the I/O signals and the logic ground of the SLC 5/03, SLC 5/04, and SLC 5/05 processors. The channel is a 9-pin D-shell. The table below provides a description of each of the pins.

Pin	Pin Name
1	DCD (Data Carrier Detect)
2	RXD (Receive Data)
3	TXD (Transmit Data)
4	DTR (Data Terminal Ready)
5	COM (Common Return [Signal Ground])
6	DSR (Data Set Ready)
7	RTS (Request to Send)
8	CTS (Clear to Send)
9	NC (No Connection)

The D-shell is the bottom port on the SLC 5/03, SLC 5/04, and SLC 5/05 processors.

SLC 500 Devices that Support RS-232 Communication

The SLC 500 product line has two other modules, aside from the SLC 5/03, SLC 5/04, and SLC 5/05 processors, that support the RS-232 communication interface. They are the 1746-BAS BASIC module and the 1747-KE DH-485/RS-232C interface. Both of these modules can be used with either the SLC 5/01 or SLC 5/02 processor.

1747-KE Module

The 1747-KE module is a communication interface module that acts as a bridge between DH-485 networks and devices requiring DF1 protocol. You can configure the DF1 port on the 1747-KE module for RS-232/423, RS-422, or RS-485 devices. Residing in an SLC 500 chassis, the 1747-KE module is ideally used as an interface module, linking remote DH-485 networks via a modem to a central host.

For more information on the 1747-KE module, see the DH-485/RS-232 Interface Module User Manual, publication 1747-IN006.

1746-BAS and 1746-BAS-T Modules

The 1746-BAS and 1746-BAS-T modules, which are programmed using the BASIC language, have two configurable serial ports for interfacing to computers, modems, serial printers, and other RS-232 compatible devices. You can also use them for off-loading complex math routines from an SLC 500 processor, thereby conserving ladder logic memory.

For more information on the 1746-BAS module, see the SLC 500 BASIC and BASIC-T Module User Manual, publication 1746-UM004.

DF1 Protocol and the SLC 5/03, SLC 5/04, and SLC 5/05 Processors

DF1 protocol combines data transparency (ANSI - American National Standards Institute - specification subcategory D1) and 2-way simultaneous transmission with embedded responses (F1). It is also a peer-to-peer, link-layer protocol. This means that system devices have equal access to messages being sent over the RS-232 communication interface.

DF1 protocol provides two modes of communication: full-duplex and half-duplex.

DF1 Full-duplex Protocol

DF1 full-duplex protocol (also referred to as DF1 point-to-point protocol) lets you use RS-232 point-to-point communication in applications that require it. This type of protocol supports simultaneous transmissions between two devices in both directions. You can use channel 0 as a programming port, or as a peer-to-peer port using the MSG instruction.

In full-duplex mode, the SLC 5/03, SLC 5/04, and SLC 5/05 processors can send and receive messages. When the SLC 5/03, SLC 5/04, and SLC 5/05 processors receive messages, they act as an end device, or final destination for the data packets[(1)]. The processor ignores the destination and source addresses received in the data packets. However, the processor swaps these addresses in the reply that it transmits in response to any command data packet that it has received.

By setting a parameter with your programming software, you can also make the processor verify that the host computer can receive embedded responses. To do this, the processor waits to receive an embedded response from the host computer, before sending one of its own. A host computer that can send embedded responses should also be able to receive them.

If you use modems with DF1 full-duplex protocol, make sure that they are capable of simultaneous bidirectional communication. Typically, dial-up modems designed to be connected to standard telephone lines can support full-duplex.

(1) The exceptions to this are SLC 5/04 and SLC 5/05 processors that have the DH+ to DF1 or Ethernet to DF1 full-duplex passthru bit enabled. In the case of the SLC 5/04, the processor checks the destination address in the packet and if it does not match the configured DH+ address of the processor, the packet is forwarded onto the DH+ network to the destination address DH+ node. In the case of the SLC 5/05, the processor checks the destination address in the packet. If the routing table exists and an IP address is in the routing table for that DF1 address, the packet is forwarded out to the Ethernet network to that IP address.

Full-duplex (Point-to-Point)

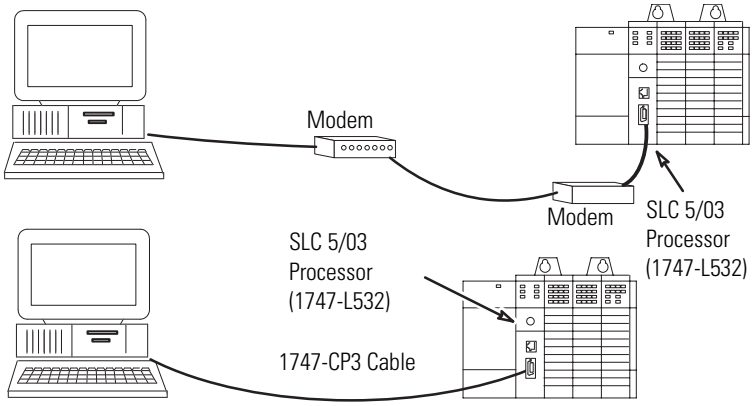

DF1 Half-duplex Protocol

DF1 half-duplex protocol provides a multi-drop single master/multiple slave network. In contrast to the DF1 full-duplex protocol, communication takes place in one direction at a time. You can use channel 0 as a programming port, or as a peer-to-peer port using the MSG instruction.

In half-duplex mode, the SLC 5/03, SLC 5/04, and SLC 5/05 processors can be either master or slave devices. As a master device, the processor polls each slave on the network on a regular and sequential basis. The master also supports routing of data packets from one slave to another, or slave-to-slave communication. As a slave device, the processor can send data packets when polled by the master device, which initiates all communication with slave devices.

If the master device has no data to send, it can still receive data from the slave device. To do this, the master sends out a poll packet addressed to the slave. If the slave has data to send, it does so in response to the poll packet. Otherwise, the slave sends a simple two-byte response, so that the master knows that it is active.

Several Allen-Bradley products support half-duplex master protocol. They include the Enhanced PLC-5 processors, and SLC 5/03, SLC 5/04, and SLC 5/05 processors. RSLinx (2.0 or later) software also supports half-duplex master protocol.

DF1 Half-duplex supports up to 255 slave devices (addresses 0...254) with address 255 reserved for master broadcasts. The SLC 5/03, SLC 5/04, and SLC 5/05 processor support broadcast reception. SLC 5/03, SLC 5/04, and SLC 5/05 processors with operating system FRN C/6 can also initiate broadcast write commands via the MSG

instruction for all channel 0 system mode drivers and for channel 1 (DH-485) on the SLC 5/03 processor.

TIP Broadcast is not supported for read commands or any remote messages. Broadcast is also not supported by the SLC 5/04 channel 1 DH+ network or the SLC 5/05 channel 1 Ethernet network.

Either half-duplex or full-duplex modem types can be used for the master, but half-duplex modems must be used for the slaves (assuming there is more than one on a multi-drop network).

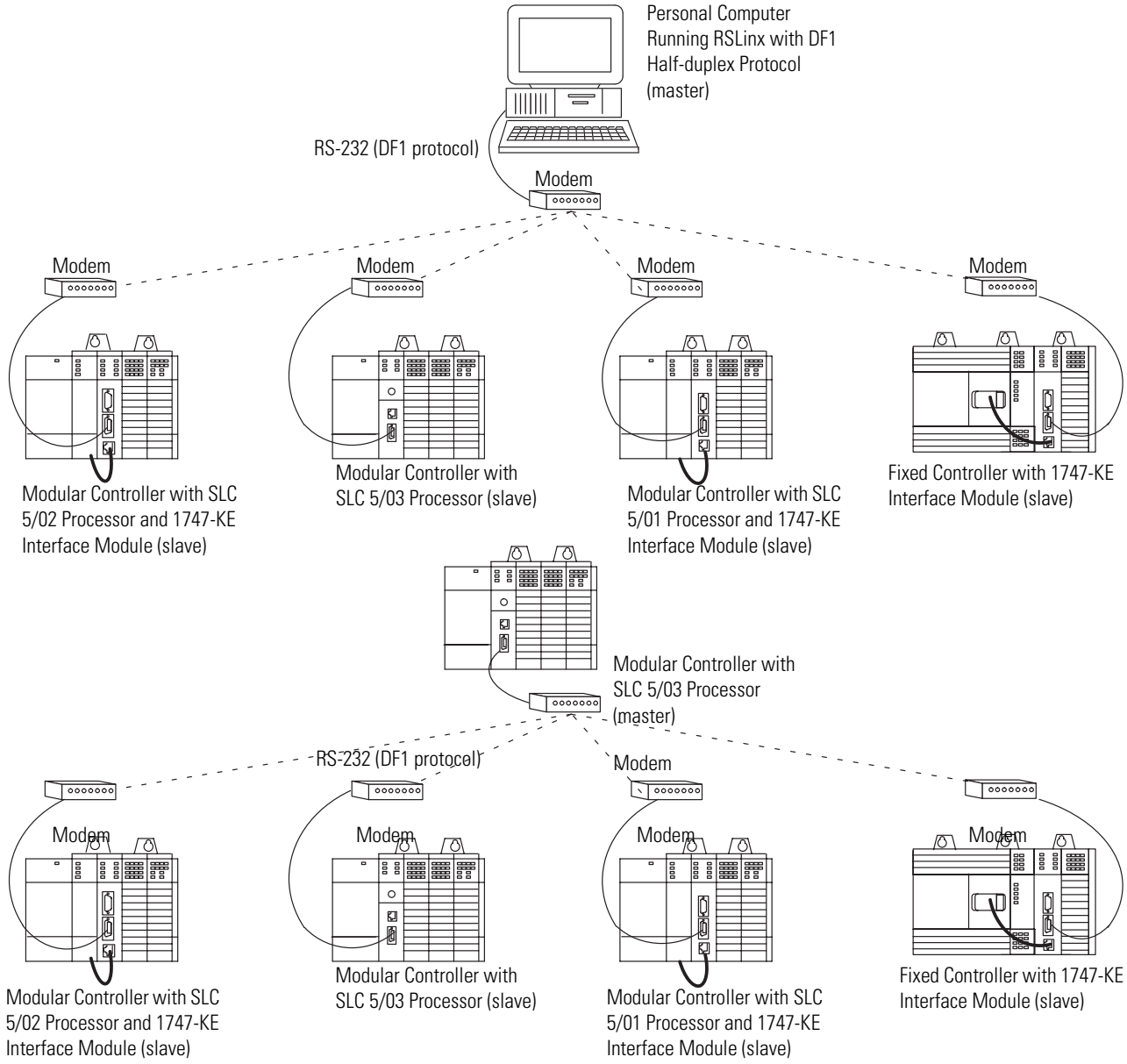

DF1 Radio Modem Channel 0 Driver

Series C FRN 6 (FRN C/6) and later versions of operating systems OS302 (SLC 5/03 processor), OS401 (SLC 5/04 processor) and OS501 (SLC 5/05 processor) include a channel 0 system mode driver called DF1 radio modem. This driver implements a protocol, optimized for use with radio modem networks, that is a hybrid between DF1 full-duplex protocol and DF1 half-duplex protocol, and therefore is not compatible with either of these protocols.

IMPORTANT The DF1 radio modem driver should only be used among devices that support and are configured for the DF1 radio modem protocol. Only SLC 5/03, SLC 5/04 and SLC 5/05 processors with operating systems FRN C/6 support DF1 radio modem protocol.

IMPORTANT There are some radio modem network configurations that will not work with the DF1 radio modem driver. (See DF1 Radio Modem System Limitations on page 209.) In these configurations, continue to use DF1 half-duplex protocol.

Like DF1 full-duplex protocol, DF1 radio modem allows any node to initiate to any other node at any time (if the radio modem network supports full-duplex data port buffering and radio transmission collision avoidance). Like DF1 half-duplex protocol, a node ignores any packets received that have a destination address other than its own, with the exception of broadcast packets and passthru packets.

Unlike either DF1 full-duplex or DF1 half-duplex protocols, DF1 radio modem protocol does not include ACKs, NAKs, ENQs, or poll packets. Data integrity is ensured by the CRC checksum.

Using the DF1 Radio Modem

The DF1 radio modem driver can be configured as the system mode driver for channel 0 using RSLogix 500 version 5.50 or later software.

Channel 0 Configuration

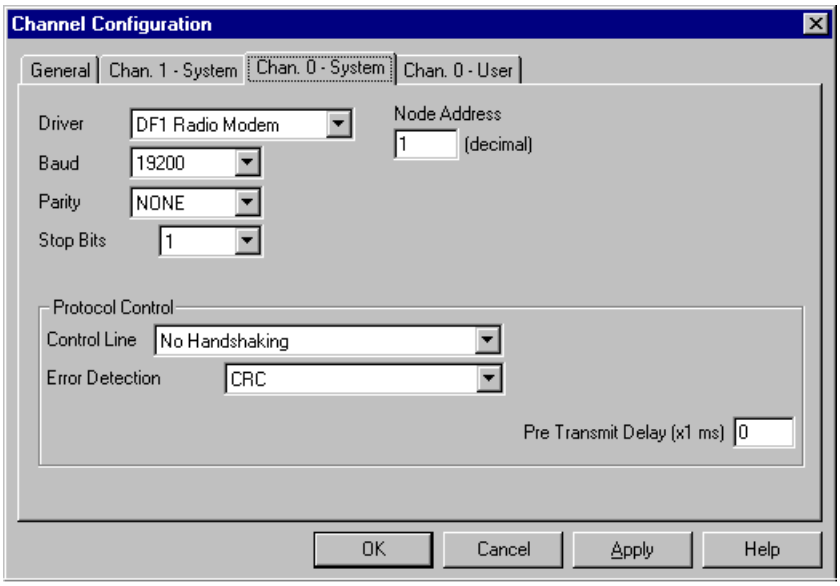

The Baud, Parity, Stop Bits and Error Detection selections are identical to the other DF1 drivers. Valid Node Addresses are 0...254, just like the DF1 half-duplex drivers.

The primary advantage of using DF1 radio modem protocol for radio modem networks is in transmission efficiency. Each read/write transaction (command and reply) requires only one transmission by the initiator (to send the command) and one transmission by the responder (to return the reply). This minimizes the number of times the radios need to key-up to transmit, which maximizes radio life and minimizes radio power consumption. In contrast, DF1 half-duplex protocol requires five transmissions for the DF1 master to complete a read/write transaction with a DF1 slave - three by the master and two by the slave.

The DF1 radio modem driver can be used in a pseudo master/slave mode with any radio modems, as long as the designated master node is the only node initiating MSG instructions, and as long as only one MSG instruction is triggered at a time.

For modern serial radio modems that support full-duplex data port buffering and radio transmission collision avoidance, the DF1 radio modem driver can be used to set up a masterless peer-to-peer radio network, where any node can initiate communication to any other node at any time, as long as all of the nodes are within radio range so that they receive each other's transmissions.

DF1 Radio Modem System Limitations

The following questions need to be answered in order to determine if you can implement the new DF1 radio modem driver in your radio modem network.

- Are all of the devices SLC 5/03, 5/04 or 5/05 processors?

  If so, then they must all be at operating system FRN C/6 or later in order to be configured with the DF1 radio modem driver using RSLogix 500 version 5.50 or later software. If not, then make sure that all of the nodes can support the DF1 radio modem protocol. Once channel 0 is configured for DF1 radio modem, you will need to use channel 1 to locally monitor and program your SLC processor using RSLogix 500 software.

- Does each node receive the radio transmissions of every other node, being both within radio transmission/reception range and on a common receiving frequency (either via a Simplex radio mode or via a single, common, full-duplex repeater)?

  If so, then go to the next question to see if you can use the DF1 radio modem driver to set up a peer-to-peer radio network. If not, then you may still be able to use the DF1 radio modem driver, but only if you limit MSG instruction initiation to the node connected to the master radio modem whose transmissions can be received by every other radio modem in the network.

- Do the radio modems handle full-duplex data port buffering and radio transmission collision avoidance?

  If so, and the answer to the previous question is yes as well, then you can take full advantage of the peer-to-peer message initiation capability in every node (for example, the ladder logic in any node can trigger a MSG instruction to any other node at any time). If not, then you may still be able to use the DF1 radio modem driver, but only if you limit MSG instruction initiation to a single master node whose transmission can be received by every other node.

- Can I take advantage of the SLC 5/03, SLC 5/04, and 5/05 channel-to-channel passthru to remotely program the other SLC nodes using RSLinx and RSLogix 500 running on a personal computer connected to a local SLC processor via DH-485, DH+, or Ethernet?

  Yes, with certain limitations imposed based on the radio modem network.

Modbus RTU Master Communication

Modbus RTU communication lets you connect the SLC 5/03, SLC 5/04, and SLC 5/05 processors to Modbus RTU slave devices for exchange of data values.

For an overview of the Modbus RTU Master protocol modem, refer to the SLC 500 Instruction Set Reference Manual (1747-RM001).

ASCII Communication

ASCII protocol lets you connect the SLC 5/03, SLC 5/04, and SLC 5/05 processors to serial printers, personal computers, and other third-party devices. ASCII protocol lets your ladder program manage ASCII data.

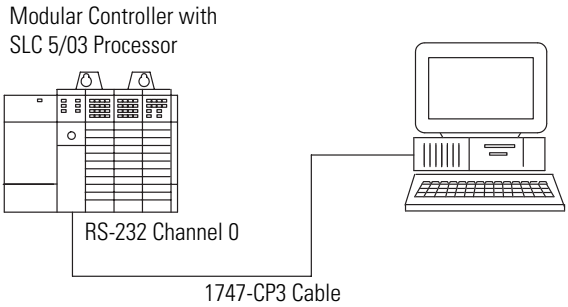

DF1/Modbus RTU Communication Protocol Modems Overview

You can connect the SLC 5/03, SLC 5/04, and SLC 5/05 processors to several types of modems. In all cases, the processors act as Data Terminal Equipment (DTE). DTE send and/or receive data on a network. Modem or line drivers act as Data Communication Equipment (DCE), which provide the signal conversion and coding required for communication between DTE and data circuits. Other DCE include phone-line modems and specialized modems, such as radio and satellite-link modems.

In addition to Common Return (COM), Receive Data (RXD), and Transmit Data (TXD), the following active modem-control lines are provided on the SLC 5/03, SLC 5/04, and SLC 5/05 processors.

RTS (Request to Send) - this output signal indicates to the modem or other DCE that the DTE wants to transmit.

CTS (Clear to Send) - this input signal from the modem indicates the modem is ready to receive the transmission by the DTE for forwarding over a link.

DSR (Data Set Ready) - this input signal indicates the DCE device is ready for operation. Loss of this signal causes a modem-lost condition in the processor.

DTR (Data Terminal Ready) - this output signal from the DTE indicates that it is ready for operation. You can also use this signal with the processor to initiate DTR dialing in dial-up modems that support such a feature.

DCD (Data Carrier Detect) - this is an input signal from the DCE that indicates a carrier signal is being received and that presumably data is to be received for forwarding to the DTE connected.

Wiring Connectors for RS-232 Communication

To connect Allen-Bradley devices with other devices over RS-232, you must wire the cable connectors so that communication can occur through the cabling, which provide the interface between devices.

Types of RS-232 Connectors

The figures below show male connectors, and their pinout locations, for Allen-Bradley devices.

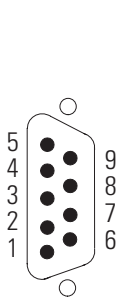

9-Pin Connector (male)

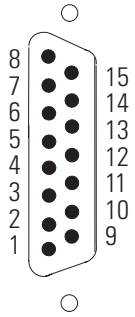

15-Pin Connector (male)

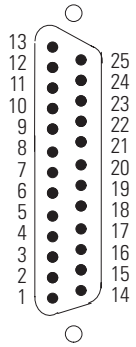

25-Pin Connector (male)

DTE Pinout

Channel 0 is configured as DTE for all SLC 5/03, SLC 5/04, and SLC 5/05 processors. The pinouts are the same as the 9-pin personal computer port.

DTE 9 Pinout		Signal is	Equivalent DTE 15 Pinout	Equivalent DTE 25 Pinout
Pin	Description			
1	DCD Data Carrier Detect	Input	8	8
2	RXD Received Data	Input	3	3
3	TXD Transmitted Data	Output	2	2
4	DTR Data Terminal Ready	Output	11	20
5	COM Common Return (Signal Ground)	Shared	7	7
6	DSR Data Set Ready	Input	6	6

DTE 9 Pinout		Signal is	Equivalent DTE 15 Pinout	Equivalent DTE 25 Pinout
Pin	Description			
7	RTS Request to Send	Output	4	4
8	CTS Clear to Send	Input	5	5
9	NC No Connection	Input		22 (RI Ring Indicator)

DCE Pinout

Devices such as a modem are DCE. The pinouts on these terminals are wired to interface with DTE.

DCE 9 Pinout		Signal is	Equivalent DCE 25 Pinout
Pin	Description		
1	DCD Data Carrier Detect	Input	8
2	RXD Received Data	Input	3
3	TXD Transmitted Data	Output	2
4	DTR Data Terminal Ready	Output	20
5	COM Common Return (Signal Ground)	Shared	7
6	DSR Data Set Ready	Input	6
7	RTS Request to Send	Output	4
8	CTS Clear to Send	Input	5
9	RI Ring Indicator	Input	22

IMPORTANT DCE signal names are viewed from a DTE perspective. For example, TXD is a DTE output and also a DCE input.

Pin Assignments for Wiring Connectors

Use the following pin assignments to wire the connectors of Allen-Bradley control devices with modems and peripheral devices that support RS-232 communication. See the table below to find the wiring diagram that you need.

To connect this device	To this Device	Remarks	See this page
Personal computer	Modem	Hardware handshaking enabled	213
	Peripheral DTE	Hardware handshaking disabled	214
SLC 5/03, SLC 5/04, and SLC 5/05 processors	Modem	Hardware handshaking enabled	214
	Peripheral DTE	Hardware handshaking disabled	215
	Personal Computer	Using a 1747-CP3 cable	215
1747-KE module	Modem	Hardware handshaking enabled	216
	Peripheral DTE	Hardware handshaking disabled	216
1746-BAS module	Modem	Hardware handshaking enabled	217
	Peripheral DTE	Hardware handshaking disabled	217
2760-RB module	Modem	Hardware handshaking enabled	218
	Peripheral DTE	Hardware handshaking disabled	218
PLC-5 (channel 0)	Modem	Hardware handshaking enabled	219
	Peripheral DTE	Hardware handshaking disabled	219

Personal Computer to a Modem (Hardware Handshaking Enabled)

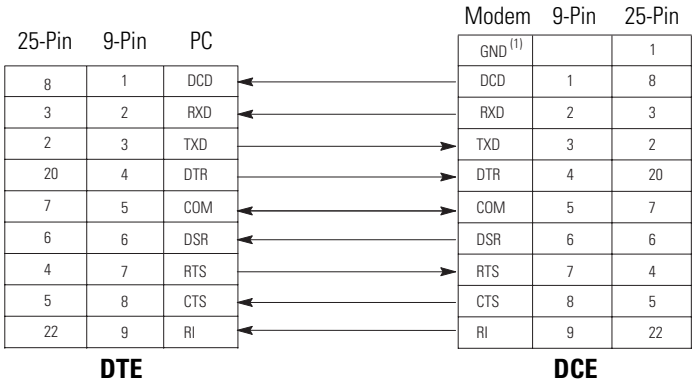

(1) Connect to the shield of the cable.

Personal Computer to SLC 5/03, SLC 5/04, or SLC 5/05 Processor, 1770-KF3 Module, or PLC-5 Processor (Hardware Handshaking Disabled) (1)

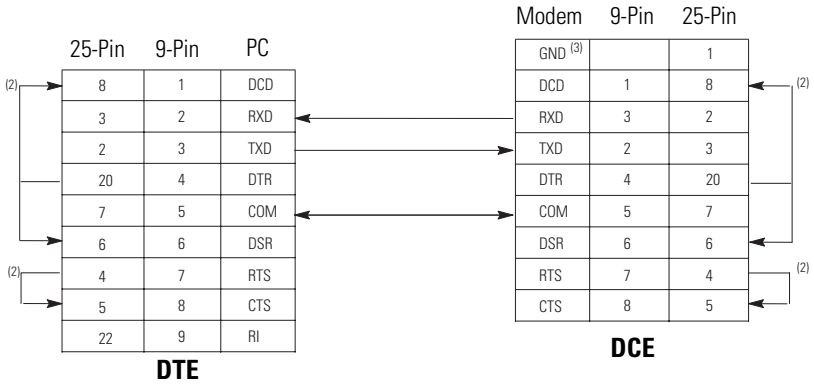

(1) You can also use the 1747-CP3 cable.
(2) Jumpers are only needed if you cannot disable the hardware handshaking on the port.
(3) Connect to the shield of the cable.

SLC 5/03, SLC 5/04, or SLC 5/05 Processor Connected to a Modem (Hardware Handshaking Enabled)

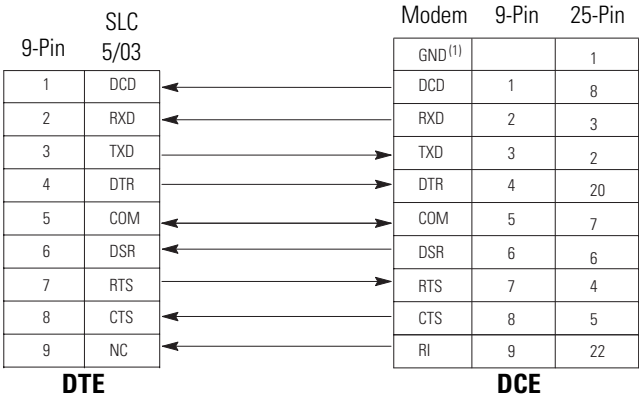

(1) Connect to the shield of the cable.

SLC 5/03, SLC 5/04, or SLC 5/05 Processor to another SLC 5/03, SLC 5/04, or SLC 5/05 Processor, Personal Computer, 1770-KF3 Module, or PLC-5 Processor (Hardware Handshaking Disabled) [1]

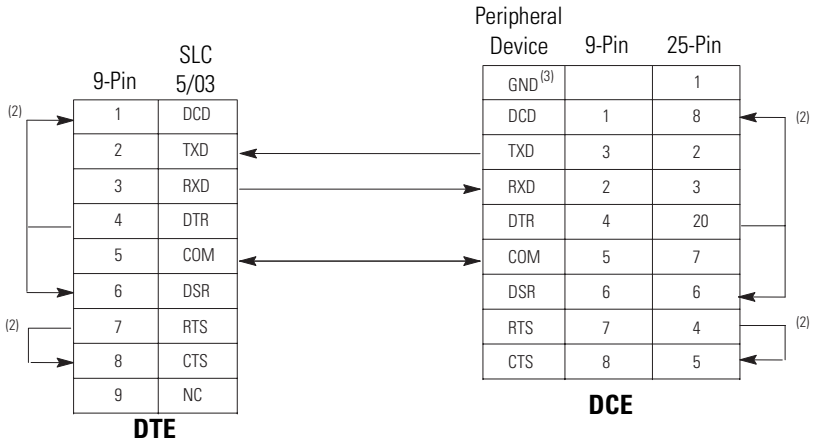

(1) You can also use the 1747-CP3 cable.
(2) Jumpers are only needed if you cannot disable the hardware handshaking on the port.
(3) Connect to the shield of the cable.

SLC 5/03, SLC 5/04, or SLC 5/05 Processor Connected to a Personal Computer with a 1747-CP3 Cable

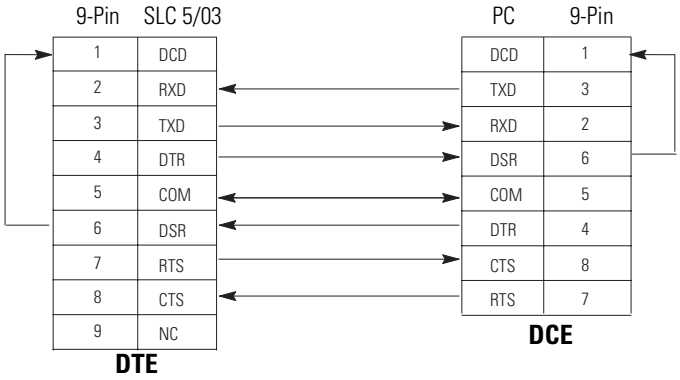

1747-KE Module to a Modem (Hardware Handshaking Enabled)

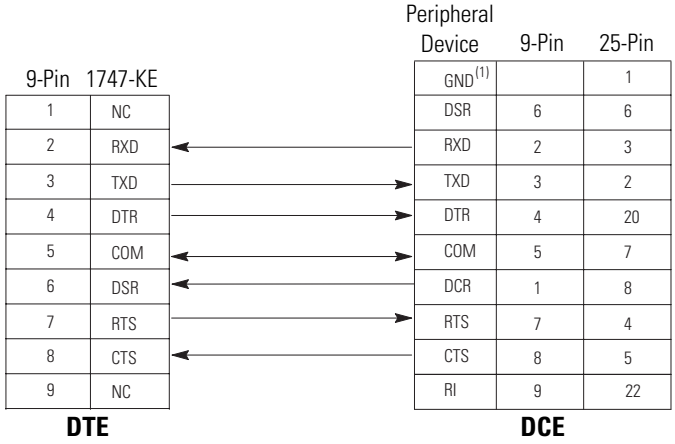

(1) Connect to the shield of the cable.

1747-KE Module to a SLC 5/03, SLC 5/04, or SLC 5/05 Processor, Personal Computer, 1770-KF3 Module, or PLC-5 Processor (Hardware Handshaking Disabled) (1)

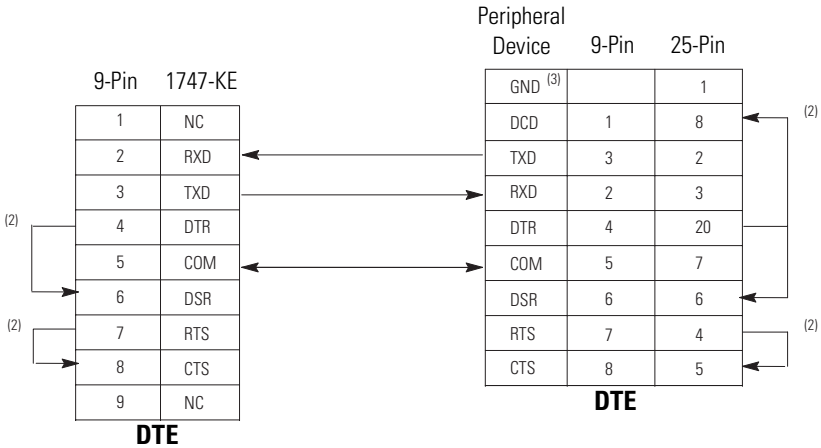

(1) You can also use the 1747-CP3 cable.
(2) Jumpers are only needed if you cannot disable the hardware handshaking on the port.
(3) Connect to the shield of the cable.

1746-BAS Module to a Modem (Hardware Handshaking Enabled)

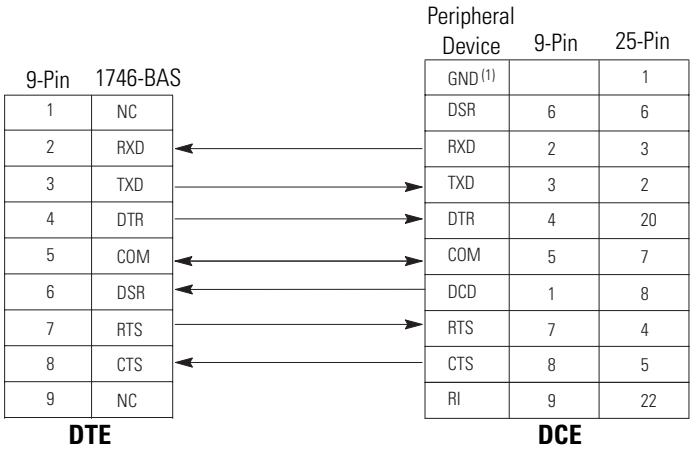

(1) Connect to the shield of the cable.

1746-BAS Module to a SLC 5/03, SLC 5/04, or SLC 5/05 Processor, Personal Computer, 1770-KF3 Module, or PLC-5 Processor (Hardware Handshaking Disabled) (1)

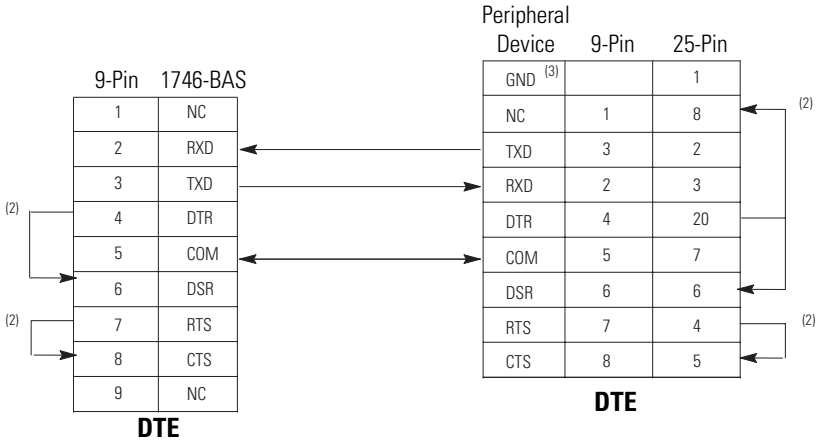

(1) You can also use the 1747-CP3 cable.
(2) Jumpers are only needed if you cannot disable the hardware handshaking on the port.
(3) Connect to the shield of the cable.

2760-RB Module to a Modem (Hardware Handshaking Enabled)

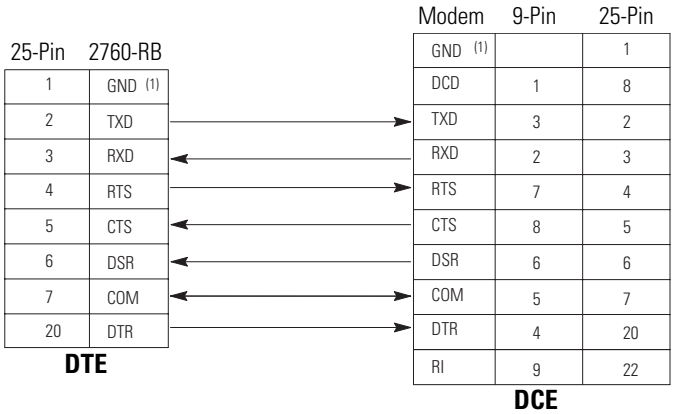

(1) Connect the shield of the cable to the GND pin on one end only. Leave the other end open.

2760-RB Module to a SLC 5/03, SLC 5/04, or SLC 5/05 Processor, Personal Computer, 1770-KF3 Module, or PLC-5 Processor (Hardware Handshaking Disabled)

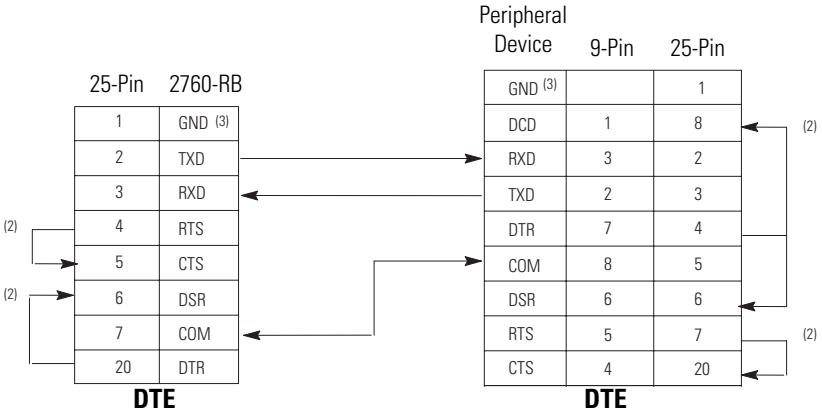

(1) You can also use the 1747-CP3 cable.
(2) Jumpers are only needed if you cannot disable the hardware handshaking on the port.
(3) Connect the shield of the cable to the GND pin on one end only. Leave the other end open.

PLC-5 Processor (Channel 0) to a Modem (Hardware Handshaking Enabled)

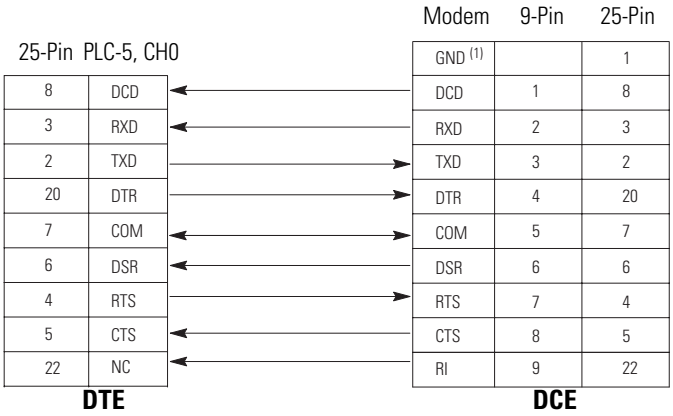

(1) Connect to the shield of the cable.

PLC-5 Processor (Channel 0) to a SLC 5/03, SLC 5/04, or SLC 5/05 Processor, Personal Computer, 1770-KF3 Module, PLC-5 Processor, 1747-KE Module, or 1746-BAS Module (Hardware Handshaking Disabled) (1)

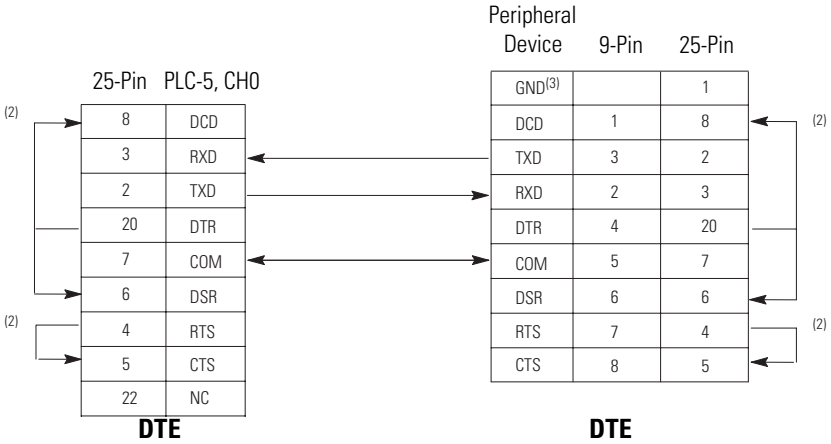

(1) You can also use the 1747-CP3 cable.
(2) Jumpers are only needed if you cannot disable the hardware handshaking on the port.
(3) Connect to the shield of the cable.

Applications for the RS-232 Communication Interface

The figures below illustrate different applications for the RS-232 communication interface.

DF1 Full-duplex Peer-to-peer

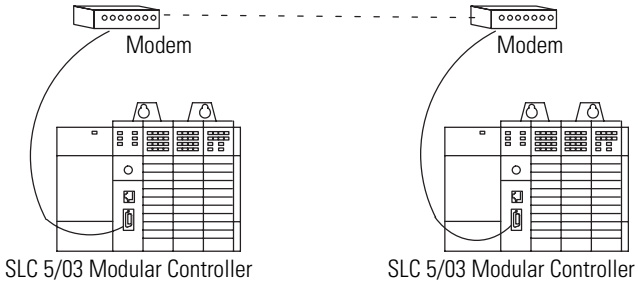

Half-duplex with Slave-to-slave Routing

IMPORTANT The 1747-KE module does not support slave-to-slave transfers.

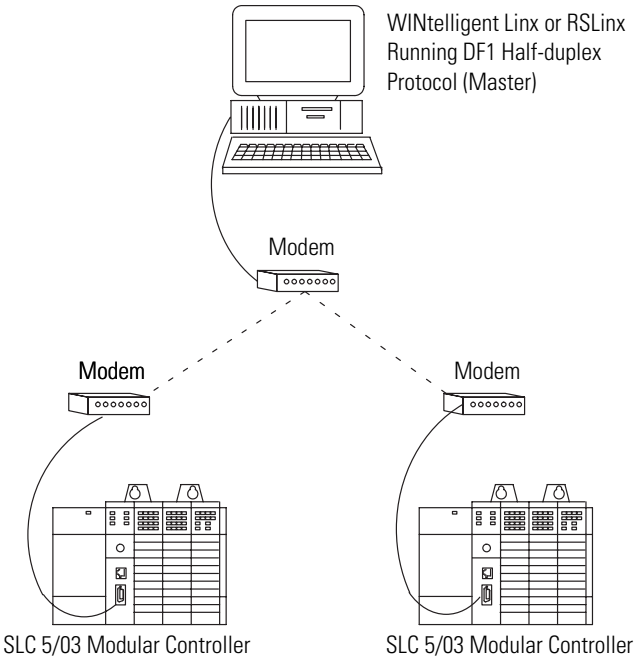

Setting Up the DH+ Network

This appendix provides an overview of the Data Highway Plus (DH+) communication protocol and explains how the SLC 5/04 processors support it. This appendix also provides:

- a DH+communication protocol overview.
- an SLC 5/04 processor and DH+communication.
- wiring connectors for DH+communication for SLC 5/04.
- a typical DH+network configuration.

Data Highway Plus Communication Protocol Overview

Data Highway Plus implements peer-to-peer communication with a token-passing scheme to rotate link mastership among a maximum of 64 nodes. Since this method does not require polling, it helps provide time-efficient reliable data transport. The DH+features:

- remote programming of PLC-2, PLC-3, PLC-5 and SLC 500 processors on your network.
- direct connections to PLC-5 processors and industrial programming terminals.
- easy re-configuration and expansion if you want to add more nodes later.
- a communication rate of 57.6 Kbaud, 115.2 Kbaud, or 230.4 Kbaud.

The following table summarizes the type of termination resistor needed to communicate at the specified communication rate with the maximum cable length.

Termination Resistor and Communication Link

Termination Link Resistor Value Ω	Communication Rate (Kbaud)	Maximum Cable Length m (ft)
150	57.6	3048 (10,000)
150	115	1542 (5000)
82	230.4	762 (2500)

SLC 5/04 Processors and DH+ Communication

The SLC 5/04 processors let you operate DH+communication protocol by means of the DH+communication channel 1. The SLC 5/04 processors also support DF1 full-duplex protocol, DF1 half-duplex master and slave protocol, ASCII, or DH-485 via its RS-232 port, channel 0. The 3-pin connector, provided with the SLC 5/04 processors, is for actual DH+communication and the 8-pin connector is for monitoring DH+communication.

DH+ Channel 1, 3-Pin

Pin	Pin Name
1	DH+Data Line 1
2	Shield
3	DH+Data Line 2

DH+ Channel 1, 8-Pin

Pin	Pin Name
1	DH+Data Line 2
2	No Connection
3	Shield
4	No Connection
5	No Connection
6	DH+Data Line 1
7	No Connection
8	No Connection

Channel 1 Location

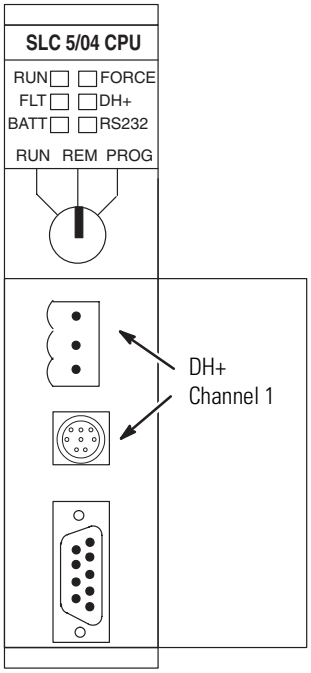

Wiring Connectors for DH+ Communication for SLC 5/04 Processors

To connect Allen-Bradley devices with other devices over DH+, you must wire the 3-pin cable connectors so that communication can occur through the cabling. Each device requires its own node address.

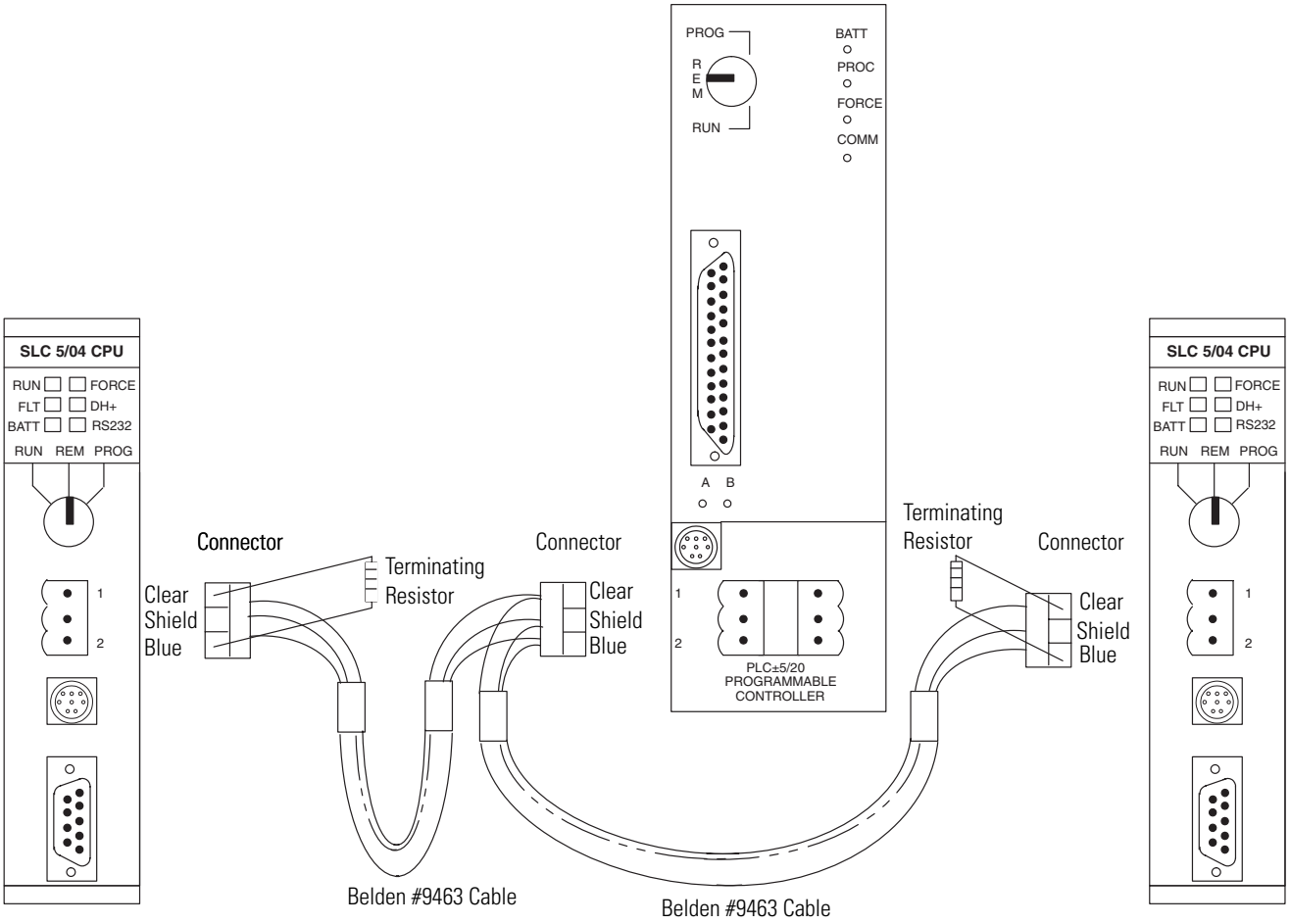

Terminate the DH+ link on both ends by connecting a 150 Ω 1/2 W resistor between terminals 1 and 2 of the 3-pin connector when you are communicating at 57.6 Kbaud with a PLC-5 processor or 115.2 Kbaud with other SLC 5/04 processors. Use an 82 Ω 1/2 W resistor if you are communicating at 230.4 Kbaud with other SLC 5/04 processors or series E enhanced PLC-5 processor.

Minimizing Noise

To minimize the affect of noise on the SLC 5/04 processor, ground the cable shields to earth via 0.01µF capacitors as shown in the DH+ wiring example below. Only directly ground the shield at one point on the network.

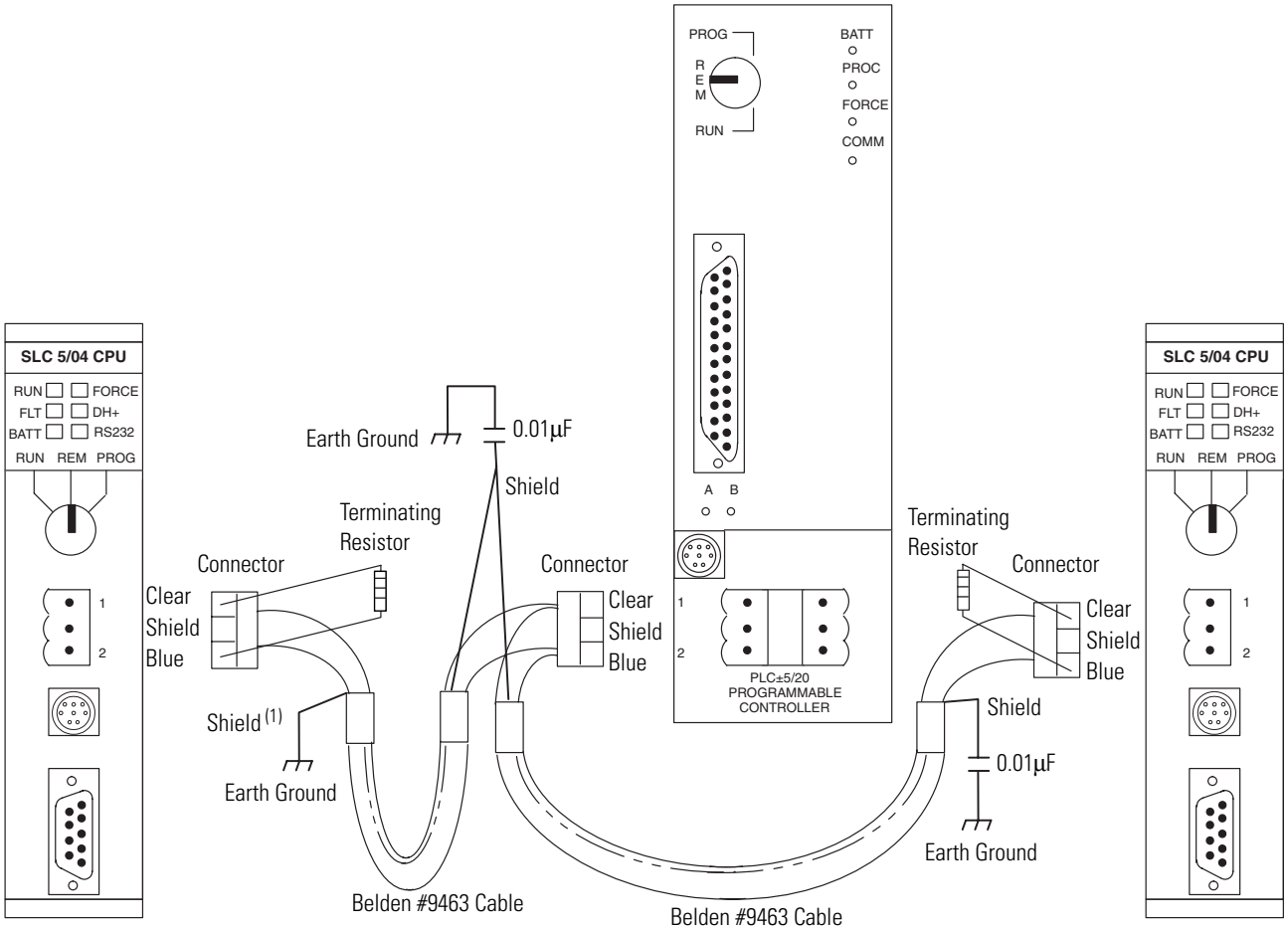

(1) To chassis ground directly at one point only in the network.

Typical DH+ Network Configuration

The following figure illustrates a possible configuration for the SLC 5/04 processor on a DH+network. You can also use an SLC 500, SLC 5/01, SLC 5/02, SLC 5/03, or SLC 5/05 processor in place of the SLC 5/04 processor on the DH+network if the 1785-KA5 card is used with a PLC-5 processor.

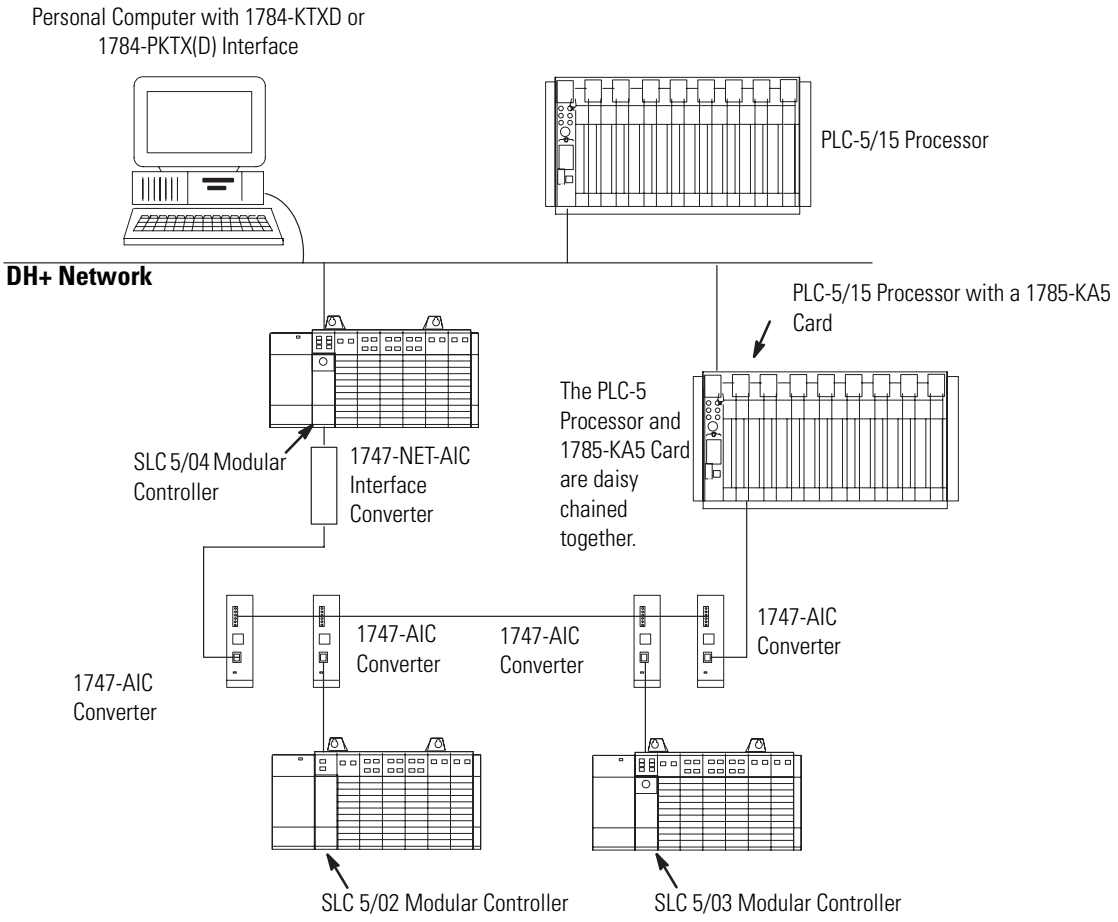

The DH+protocol uses factory set timeouts to restart token-passing communication if the token is lost because of a defective node.

Other devices that use the DH+ network include those in the table below.

Catalog Number	Description	Installation Requirement	Function	Publication Number
1784-PCMK	PCMCIA interface card	PCMCIA slot in computer	Provides DH+ or DH-485 connection	1784-UM519
1784-PKTX(D)	Personal computer DH+ interface card	PCI bus	Provides DH+ or DH-485 connection	1784-UM527

Power Supply Worksheet

Power Supply Loading

Use the table below to calculate the power supply loading for each chassis in your SLC modular application.

Hardware Component	Cat. No.	Maximum Current (A)	
		at 5V dc	at 24V dc
Processors	**1747-L511**	0.090	0
	1747-L514	0.090	0
	1747-L524	0.090	0
	1747-L531	0.500	0.175
	1747-L532	0.500	0.175
	1747-L533	0.500	0.175
	1747-L541	1.000	0
	1747-L542	1.000	0
	1747-L543	1.000	0
	1747-L551	1.000	0
	1747-L552	1.000	0
	1747-L553	1.000	0
Digital Input Modules	**1746-IA4**	0.035	-
	1746-IA8	0.050	-
	1746-IA16	0.085	-
	1746-IB8	0.050	-
	1746-IB16	0.050	-
	1746-IB32(1)	0.050	-
	1746-IC16	0.050	-
	1746-IG16	0.140	-
	1746-IH16	0.085	-
	1746-IM4	0.035	-
	1746-IM8	0.050	-
	1746-IM16	0.085	-
	1746-IN16	0.085	-
	1746-ITB16	0.050	-
	1746-ITV16	0.085	-
	1746-IV8	0.050	-
	1746-IV16	0.085	-
	1746-IV32(1)	0.050	-

Hardware Component	Cat. No.	Maximum Current (A)	
		at 5V dc	at 24V dc
Digital Output Modules	**1746-OA8**	0.185	-
	1746-OA16	0.370	-
	1746-OAP12	0.370	-
	1746-OB6EI	0.046	-
	1746-OB8	0.135	-
	1746-OB16	0.280	-
	1746-OB16E	0.135	-
	1746-OB32(1)	0.190	-
	1746-OB32E	0.190	-
	1746-OBP8	0.135	-
	1746-OBP16	0.250	-
	1746-OG16	0.180	-
	1746-OV8	0.135	-
	1746-OV16	0.270	-
	1746-OV32(1)	0.190	-
	1746-OVP16	0.250	-
	1746-OW4	0.045	0.045
	1746-OW8	0.085	0.090
	1746-OW16	0.170	0.180
	1746-OX8	0.085	0.090
Digital Combination Modules	**1746-IO4**	0.030	0.025
	1746-IO8	0.060	0.045
	1746-IO12	0.090	0.070
	1746-IO12DC	0.080	0.060
Analog Input Modules	**1746-NI4**	0.025	0.085
	1746-NI8	0.200	0.100
	1746-NI16I	0.125	0.075
	1746-NI16V	0.125	0.075
Analog Output Modules	**1746-NO4I**	0.055	0.195
	1746-NO4V	0.055	0.145
	1746-NO8I	0.120	0.250(2)
			0(3)
	1746-NO8V	0.120	0.160(2)
			0(3)
Analog Combination Modules	**1746-FIO4I**	0.055	0.150
	1746-FIO4V	0.055	0.120
	1746-NIO4I	0.055	0.145
	1746-NIO4V	0.055	0.115

Hardware Component	Cat. No.	Maximum Current (A)	
		at 5V dc	at 24V dc
Specialty Modules	**1746-BAS (-T)**	0.150	0.040[4]
	1746-BLM	1.000	-
	1746-BTM	0.110	0.085
	1746-HSCE	0.320	-
	1746-HSCE2	0.250	-
	1746-HSRV	0.300	-
	1746-HSTP1	0.300	-
	1746-INT4	0.110	0.085
	1746-NR4	0.050	0.050
	1746-NR8	0.100	0.055
	1746-NT4	0.060	0.040
	1746-NT8	0.120	0.070
	1746-QS	1.000	0.200
	1746-QV	0.215	-
Communication Modules	**1747-ACN15**	0.900	-
	1747-ACNR15	0.900	-
	1747-ASB	0.375	-
	1747-BSN	0.800	0
	1747-DCM	0.360	-
	1747-KE	0.150	0.040[4]
	1747-KFC15	0.640	0
	1747-SCNR	0.900	-
	1747-SDN	0.500	-
	1747-SN	0.600	-
Peripheral Devices	**1747-AIC**	0	0.085
	1747-DTAM	0	[5]
	1747-PIC	0	[5]
	1747-PSD	NA	NA
	1747-UIC[6]	NA	NA
	1761-NET-AIC[7]	NA	NA

(1) Power supply loading for Series D and later modules.

(2) J4 jumper set to RACK.

(3) J4 jumper set to EXT.

(4) When using the 1746-BAS or 1747-KE modules to supply power to an AIC draws its power through the module. Add 0.085 A (the current loading for the 1761-AIC interface) to the 1746-BAS or 1747-KE module's power supply loading value at 24V dc.

(5) The 24V dc loading values of the 1747-PIC and 1747-DTAM interfaces are included in the 24V dc loading value of the processor.

(6) USB power consumption is less than 100 mA.

(7) Current for the 1761-NET-AIC must be supplied from an external 24V dc source. No current is consumed from the controller when an external source is used.

Blank Worksheet

Procedure

1. For each slot of the chassis that contains a module, list the slot number, the catalog number of the module, and its 5V and 24V maximum currents. Also include the power consumption of any peripheral devices that may be connected to the processor other than a 1747-DTAM or 1747-PIC interface-the power consumption of these devices is accounted for in the power consumption of the processor.

Chassis Number			**Maximum Currents**		**Chassis Number**			**Maximum Currents**	
Slot Number		**Cat. No.**	**at 5V dc**	**at 24V dc**	**Slot Number**		**Cat. No.**	**at 5V dc**	**at 24V dc**
Slot					Slot				
Slot					Slot				
Slot					Slot				
Slot					Slot				
Slot					Slot				
Slot					Slot				
Slot					Slot				
Slot					Slot				
Peripheral Device					Peripheral Device				
Peripheral Device					Peripheral Device				
2.Add the loading currents of all the system devices at 5 and 24V dc to determine the **Total Current**.					2.Add the loading currents of all the system devices at 5 and 24V dc to determine the **Total Current**.				

3.For 1746-P4 power supplies, calculate the total power consumption of all system devices. If you are not using a 1746-P4 power supply, go to step 4.

Current		**Multiply by**	**= Watts**	**Current**		**Multiply by**	**= Watts**
Total Current at 5V dc		5V		Total Current at 5V dc		5V	
Total Current at 24V dc		24V		Total Current at 24V dc		24V	
User Current at 24V dc		24V		User Current at 24V dc		24V	
Add the Watts values to determine Total Power (cannot exceed 70 Watts)				**Add the Watts values to determine Total Power (cannot exceed 70 Watts)**			

4.Choose the power supply from the list of catalog numbers shown below. Compare the Total Current required for the chassis with the Internal Current capacity of the power supplies. Be sure that the Total Current consumption for the chassis is less than the Internal Current Capacity for the power supply, for both 5V and 24V loads.

Cat. No.		**Internal Current Capacity**		**Cat. No.**		**Internal Current Capacity**	
		at 5V dc	**at 24V dc**			**at 5V dc**	**at 24V dc**
1746-P1		2.0A	0.46A	**1746-P1**		2.0A	0.46A
1746-P2		5.0A	0.96A	**1746-P2**		5.0A	0.96A
1746-P3		3.6A	0.87A	**1746-P3**		3.6A	0.87A
1746-P4 (see step 3)		10.0A	2.88A	**1746-P4 (see step 3)**		10.0A	2.88A
1746-P5		5.0A	0.96A	**1746-P5**		5.0A	0.96A
1746-P6		5.0A	0.96A	**1746-P6**		5.0A	0.96A
1746-P7 (See page 37 for current capacity.)	12V Input	2.0A	0.46A	**1746-P7 (**See page 37 for current capacity.)	12V Input	2.0A	0.46A
	24V Input	3.6A	0.87A		24V Input	3.6A	0.87A
Required Power Supply				**Required Power Supply**			

Control Networks

This appendix provides a brief introduction about control networks. For more information on using control networks, see the following publications.

Control Network	Publication	Publication Number
Remote I/O	Direct Communication Module User Manual	1747-6.8
	RIO Scanner User Manual	1747-UM013
DeviceNet	DeviceNet Scanner Configuration Manual	1747-UM655
	DeviceNet Interface User Manual	1761-UM005
ControlNet	SLC ControlNet Scanner Reference Manual	1747-RM623
	SLC 500 ControlNet RS-232 Interface Module User Manual	1747-5.34

The Allen-Bradley Remote I/O Network is a master/slave control network that enables chassis of I/O, operator interface terminals, push-button panels, I/O blocks, message displays, and drives to be great distances from the host PLC processor. The SLC 500 fixed, SLC 5/01, SLC 5/02, SLC 5/03, SLC 5/04, or SLC 5/05 processors can interface to this network through the 1747-DCM module for distributed control. The DCM lets the SLC 500 processor look like another slave device on the network.

Allen-Bradley Remote I/O Network

Below is an example of the Allen-Bradley Remote I/O Network.

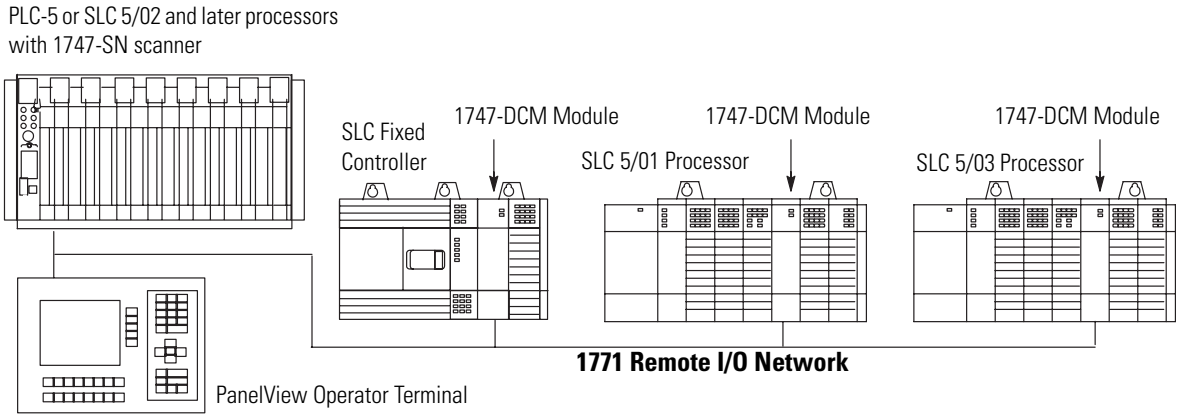

With an SLC 5/02, SLC 5/03, SLC 5/04, or SLC 5/05 processor, a 1747-SN Remote I/O Scanner can be used as the master of a remote I/O network.

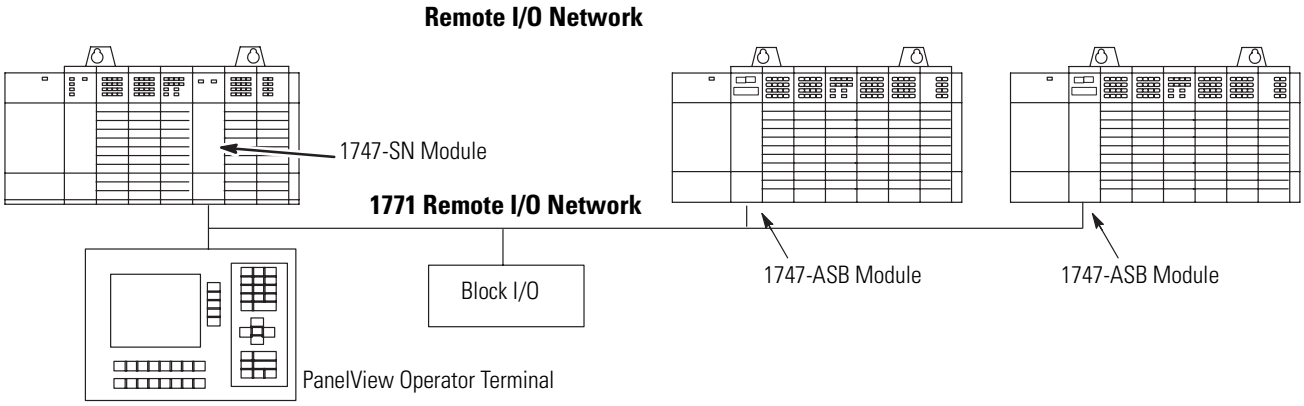

Each 1747-SN scanner supports 4 logical racks of 256 I/O each per logical rack. If large amounts of data need to be transferred to a device such as a PanelView operator interface, the 1747-SN series B scanner supports block transfer of up to 64 words of data. Up to 16 devices can be connected to a single remote I/O network. The SLC system supports multiple 1747-SN scanners if more devices are required to be controlled by a single SLC processor.

Remote I/O Passthru

Remote I/O passthru enables communication between a personal computer on the same network as an SLC 5/03, 5/04, or 5/05 processor to devices on the remote I/O network. For example, a personal computer running PanelBuilder32 software and communicating on the DH+ network could upload and download applications from a PanelView operator terminal communicating on the remote I/O network. This feature eliminates the need to physically connect the personal computer to the PanelView operator terminal when you need to change the application. This capability is available on the 1747-SN series B scanner, and the 1747-BSN backup scanner.

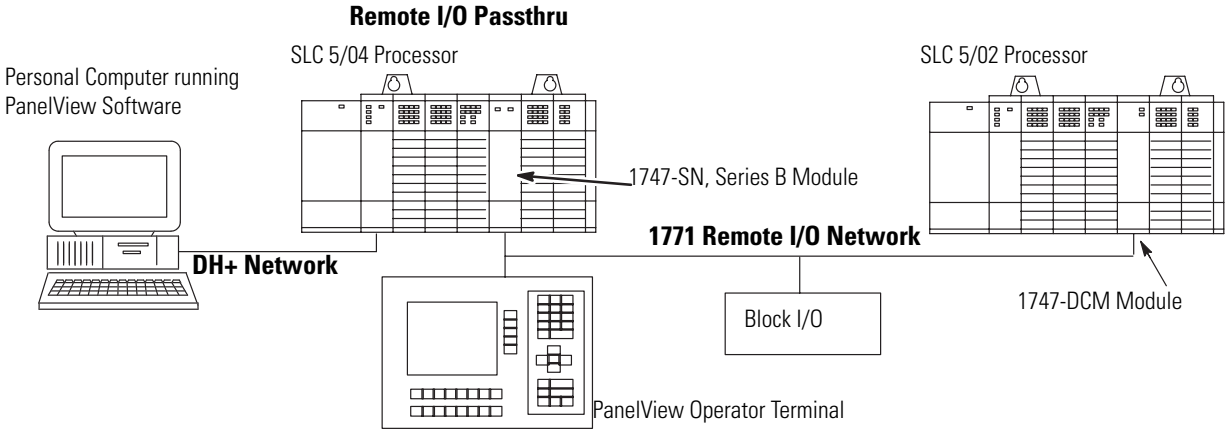

TIP The SLC 5/03 OS302 or later, SLC 5/04 OS401 or later, and SLC 5/05 processor support remote I/O passthru via both their communication ports.

DeviceNet Network

A DeviceNet network connects plant floor devices directly to the control system (for example, SLC 500 controller) reducing the number of I/O interfaces and wiring associated with a typical hard-wired solution. The DeviceNet communication network is a completely open device network and has the support of industry's leading sensor, actuator, and control manufacturers.

The 1747-SDN DeviceNet Scanner

In a typical configuration, the 1747-SDN DeviceNet Scanner acts as an interface between DeviceNet devices and the SLC 5/02, SLC 5/03, SLC 5/04, and SLC 5/05 processors. The scanner communicates with DeviceNet devices over the network to:

- read inputs from a device.
- write outputs to a device.
- download configuration data.
- monitor a device's operational status.

The scanner communicates with the SLC 500 processors to exchange I/O data. Information exchanged includes:

- device I/O data.
- status information.
- configuration data.

A single scanner (master) can communicate with up to 63 nodes (slaves) on DeviceNet. The SLC system supports multiple scanners if more devices are required to be controlled by a single SLC 500 processor.

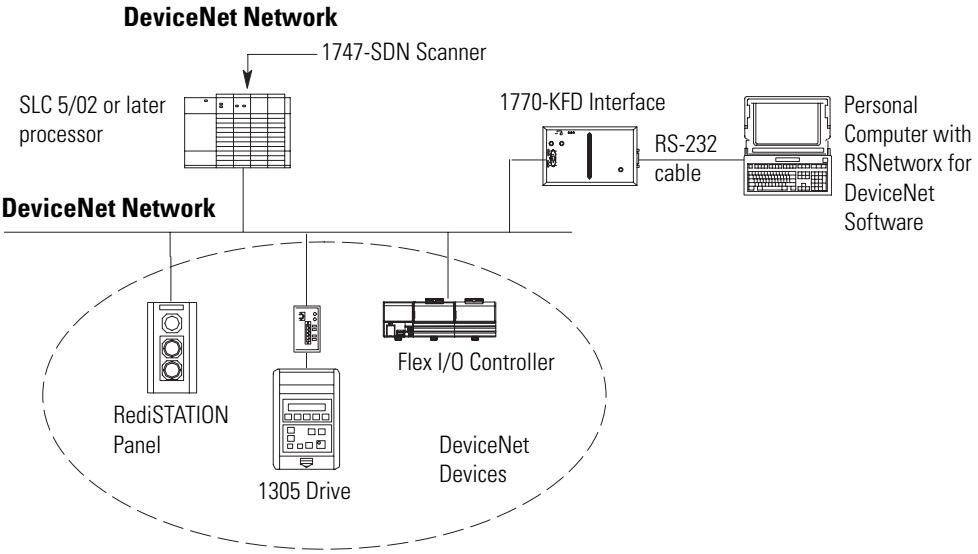

The 1761-NET-DNI DeviceNet Interface

The DeviceNet Interface (DNI) is an intelligent DeviceNet-to-DF1 protocol conversion device that let existing DF1 devices communicate on DeviceNet network. The DF1 device is able to exchange I/O data with a master device and is able to initiate and receive DF1 encapsulated DeviceNet messages across a DeviceNet network.

The DNI provides a single DeviceNet connection point and a single RS-232 connection. The DeviceNet port is isolated from the DNI digital logic and RS-232 port.

The primary functions of the DNI are:

- to collect and receive input data from the DF1 device connected on its RS-232 port and forward that data to a connected master on a DeviceNet network.
- to monitor output data received from the DeviceNet master and write that data to the DF1 device.
- to let DF1 devices send and receive messages across the DeviceNet network.

The DNI can be used to interconnect:

- MicroLogix controllers.
- PLC-5 programmable controllers.
- operator interface devices.
- SLC 5/03, SLC 5/04, and SLC 5/05 processors.

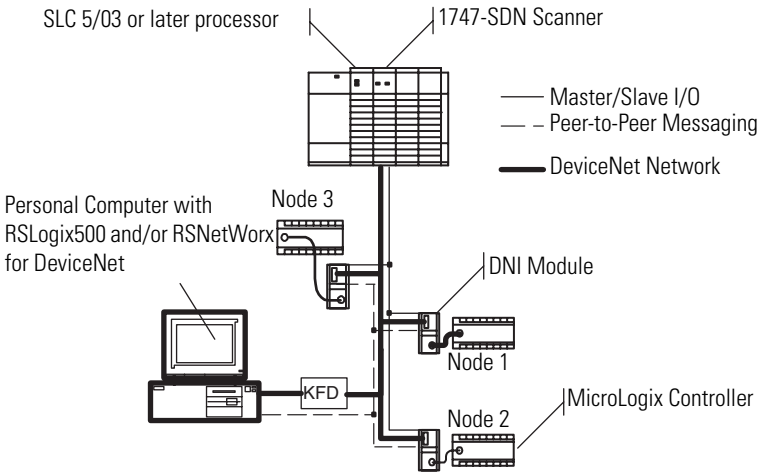

DeviceNet Network Length

The DeviceNet network lengths are listed below.

Network Length	Communication Rate
100 m (328.08 ft)	500 Kbaud
200 m (656.16 ft)	250 Kbaud
500 m (1640.42 ft)	125 Kbaud

ControlNet Network

ControlNet systems are designed to:

- provide high-speed, repeatable, deterministic I/O transmission.
- let control and message information co-exist on the same physical media.
- make sure that I/O data transfers are not affected by programming terminal activity or interscanner message activity on the network.

The 1747-SCNR ControlNet Scanner Module

The 1747-SCNR scanner provides the capability for SLC processors to produce or consume scheduled I/O to and from a ControlNet network. Scheduled messaging lets the SLC processor program control I/O events in real time over the ControlNet network. The module connects to a ControlNet network via the standard BNC connectors.

The 1747-KFC15 ControlNet Messaging Module

The 1747-KFC15 module provides the capability for SLC 5/03 and later processors to send or receive unscheduled ControlNet messages. With unscheduled messages, the SLC processor program can send peer-to-peer messages or be accessed and edited over the ControlNet network using RSLogix 500 software.

The 1747-KFC15 module connects to the ControlNet network via the standard BNC connectors and links to the SLC processor via a standard RS-232 cable. Other programming interfaces can connect to the ControlNet network through the 1747-KFC15 module's network access port.

Communicating with Devices on an Ethernet Network

This appendix:

- describes SLC 5/05 processors and Ethernet communication.
- describes SLC 5/05 performance considerations.
- describes Ethernet network connections and media.
- explains how the SLC 5/05 establishes node connections.
- lists Ethernet configuration parameters and procedures.
- describes configuration for subnet masks and gateways.

SLC 5/05 Processors and Ethernet Communication

Ethernet is a local area network that provides communication between various devices at 10/100 Mbps. The physical communication media options for the SLC 5/05 are:

- built-in.
  - twisted-pair (10/100Base-T)
- with media converters or hubs.
  - fiber optic
  - broadband
  - thick-wire coaxial cable (10Base-5)
  - thin-wire coaxial cable (10Base-2)

See the following page for more information on Ethernet physical media.

The SLC 5/05 processor supports Ethernet communication via the Ethernet communication channel 1 shown in the drawing page 238.

Communication Channels

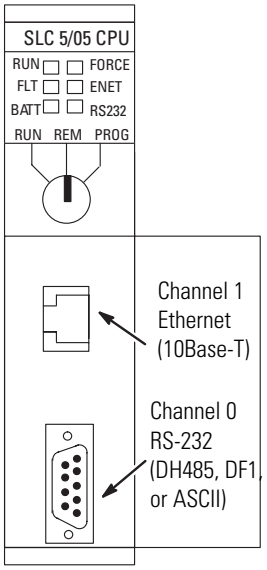

SLC 5/05 Performance Considerations

Actual performance of an SLC 5/05 processor varies according to:

- size of Ethernet messages.
- frequency of Ethernet messages.
- network loading.
- the implementation and performance of your processor application program.

Optimal Performance: RSLinx to SLC 5/05 Processor (2-node Ethernet network)

Operation	Words	MSG per Second	Words per Second
Single Typed Read	1	105	105
Single Typed Reads	20	99	1980
Single Typed Reads	100	86	8600
Single Typed Reads	256	71	18,176

SLC 5/05 Processor and Personal Computer Connections to the Ethernet Network

The SLC 5/05 Ethernet connector conforms to ISO/IEC 8802-3 STD 802.3 and utilizes 10/100Base-T media. Connections are made directly from the SLC 5/05 to an Ethernet hub. The network setup is simple and cost effective. Typical network topology is pictured below.

Ethernet Network Topology

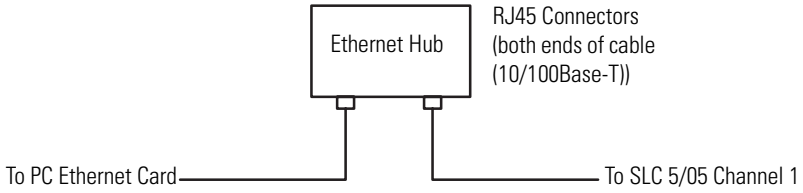

IMPORTANT The SLC 5/05 processor contains a 10/100Base-T, RJ45 Ethernet connector which connects to standard Ethernet hubs via 8-wire twisted-pair straight-through cable. To access other Ethernet mediums, use 10/100Base-T media converters or Ethernet hubs that can be connected together via fiber, thin-wire, or thick-wire coaxial cables, or any other physical media commercially available with Ethernet hubs.

Ethernet Channel 1 8-pin 10Base-T Connector

The Ethernet connector is an RJ45, 10Base-T connector. The pin-out for the connector is shown below.

Pin	Pin Name
1	TD+
2	TD-
3	RD+
4	not used by 10BASE-T
5	not used by 10BASE-T
6	RD-
7	not used by 10BASE-T
8	not used by 10BASE-T

When to use straight-through and cross-over pin-out:

- SLC 5/05 Ethernet port to 10/100Base-T Ethernet hub cables utilize a straight-through pin-out (1-1, 2-2, 3-3, 6-6).
- Direct point-to-point 10/100Base-T cables connecting the SLC 5/05 Ethernet port directly to another SLC 5/05 Ethernet port (or a computer 10/100Base-T port) require a cross-over pin-out (1-3, 2-6, 3-1, 6-2).

Cables

Shielded and non-shielded twisted-pair 10/100Base-T cables with RJ45 connectors are supported. The maximum cable length between an SLC 5/05 Ethernet port and a 10/100Base-T port on an Ethernet hub (without repeaters or fiber) is 100 m (323 ft). However, in an industrial application, cable length should be kept to a minimum.

Ethernet Connections

TCP/IP is the mechanism used to transport Ethernet messages. On top of TCP, the Client/Server Protocol is required to establish sessions and to send the MSG commands. Connections can be initiated by either a client program (INTERCHANGE or RSLinx application) or a processor.

The client program or processor must first establish a connection to the SLC 5/05 processor to enable the SLC 5/05 processor to receive solicited messages from a client program or another processor.

In order to send an outgoing message, the SLC 5/05 processor must first establish a connection with the destination node at a specified IP address on the Ethernet network. A connection is established when a MSG instruction executes and no previous connection exists.

When a MSG instruction executes, the SLC 5/05 processor checks to see whether a connection has been established with the destination node. If a connection has not been established, the SLC 5/05 processor attempts to establish a connection of the peer type.

In order to receive messages from another device on Ethernet, an incoming connection must be established. This incoming connection is made by the sending processor and uses one incoming connection in the receiving processor.

The SLC 5/05 processor supports a maximum of 32 connections for the 1747-L551 processor, and 48 connections for 1747-L552 and 64 connections for 1747-L553 processor, allowing simultaneous communication with up to 64 other devices or applications.

Connections

Number of Connections[1]	Dedicated to
4	outgoing connections
4	incoming connections
24[2], 40[3], or 56[4]	either incoming or outgoing connections

(1) Connections established by an INTERCHANGE client, RSLinx client, and peers are all included when counting the number of connections.

(2) 1747-L551 processor.

(3) 1747-L552 processor.

(4) 1747-L553 processor.

IMPORTANT For outgoing connections, no more that one connection per destination node is established. If multiple MSG instructions use the same destination node, they share the same connection.

Configuring the Ethernet Channel on the SLC 5/05 Processor

There are two ways to configure the SLC 5/05 Ethernet channel 1. The configuration can be done via a BOOTP/DHCP request at processor powerup, or by manually setting the configuration parameters by using RSLogix 500 programming software. The configuration parameters are shown on page 242.

Configuration Parameters

Parameter	Description	Default	Status
Diagnostic File Number	The file number of the diagnostic counter for this channel. A Diagnostic File Number value of zero means that no diagnostics file has been configured for this channel. The Diagnostic File Number must be an integer within the limits of 7, 9...255.	0	read/write
MSG Connection Timeout	The amount of time (in ms) allowed for a MSG instruction to establish a connection with the destination node. The MSG Connection Timeout has 250 ms resolution and a range from 250...65,500.	15,000 ms	read/write
MSG Reply Timeout	The amount of time (in ms) that the SLC 5/05 processor will wait for a reply to a command that it has initiated via a MSG instruction. The MSG Reply Timeout has 250 ms resolution and a range from 250...65,500.	3000 ms	read/write
Inactivity Timeout	The amount of time (in minutes) that a MSG connection may remain inactive before it is terminated. The Inactivity Timeout has a 1 minute resolution and a range from 1...65,500 minutes.	30 minutes	read/write
IP Address	The SLC 5/05 internet address (in network byte order). The internet address must be specified to connect to the TCP/IP network.	0 (undefined)	read/write
Subnet Mask	The SLC 5/05 subnet mask (in network byte order). The Subnet Mask is used to interpret IP addresses when the internet is divided into subnets. A Subnet Mask of all zeros indicates that no subnet mask has been configured.	0	read/write
Gateway Address	The address of a gateway (in network byte order) that provides connection to another IP network. A Gateway Address of all zeros indicates that no gateway has been configured.	0	read/write
BOOTP Enable	The BOOTP enable switch. When BOOTP is enabled, the SLC 5/05 processor attempts to learn its network related parameters at powerup via a BOOTP request. There must be a BOOTP server on the network capable of responding to this BOOTP request. When BOOTP is disabled, the SLC 5/05 processor uses the locally configured network related parameters (for example, IP Address, Subnet Mask, Broadcast Address).	1 (enabled)	read/write
Hardware Address	The SLC 5/05 Ethernet hardware address.	Ethernet hardware address	read only

Configuration Using RSLogix 500 Programming Software

Refer to the documentation provided with your programming software.

Configuration Via BOOTP

BOOTP (bootstrap protocol) is a low-level protocol that TCP/IP nodes use to obtain start-up information. By default, the SLC 5/05 processor broadcasts BOOTP requests at powerup. The BOOTP Valid parameter remains clear until a BOOTP reply has been received. BOOTP lets you dynamically assign IP Addresses to processors on the Ethernet Link.

To use BOOTP, a BOOTP Server must exist on the local Ethernet subnet. The server is a computer that has BOOTP Server software

installed and reads a text file containing network information for individual nodes on the network.

The host system's BOOTP configuration file must be updated to service requests from SLC 5/05 processors. The following parameters must be configured.

Configurable BOOTP Parameters

Parameter	Description
IP Address	A unique IP Address for the SLC 5/05 processor.
Subnet Mask	Specifies the net and local subnet mask as per the standard on subnetting RFC 950, Internet Standard Subnetting Procedure.
Gateway	Specifies the IP address of a gateway on the same subnet as the SLC 5/05 processor that provides connections to another IP network.

TIP You can use any commercially available BOOTP server. If you do not have BOOTP Server capabilities on your network, and you want to dynamically configure Channel 1, you can download the free Rockwell Automation BOOTP server from the Rockwell Automation website. Go to www.ab.com/networks/bootp.html

When BOOTP is enabled, the following events occur at power-up:

- The processor broadcasts a BOOTP-request message containing its hardware address over the local network or subnet.
- The BOOTP server compares the hardware address with the addresses in its look-up table.
- The BOOTP server sends a message back to the processor with the IP address and other network information that corresponds to the hardware address it received.

With all hardware and IP addresses in one location, you can easily change IP addresses in the BOOTP configuration file if your network needs change.

The BOOTP request can be disabled by clearing the BOOTP Enable parameter in the channel Configuration File. When BOOTP Enable is cleared (disabled), the SLC 5/05 processor uses the existing channel configuration data.

IMPORTANT If BOOTP is disabled, or no BOOTP server exists on the network, you must use SLC 500 programming software to enter/change the IP address for each processor.

Use the Rockwell BOOTP Utility

The Rockwell BOOTP utility is a standalone program that incorporates the functionality of standard BOOTP software with a user-friendly graphical interface. You can download it from www.ab.com/networks/bootp.html. The device must have BOOTP enabled (factory default) to use the utility.

To configure your device by using the BOOTP utility, perform the following steps.

1. Run the BOOTP software. In the BOOTP Request History panel you will see the hardware addresses of devices issuing BOOTP requests.

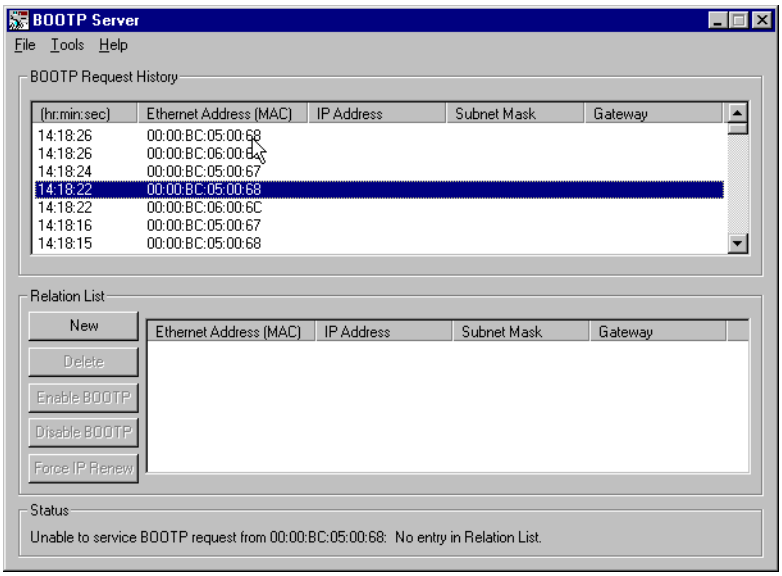

2. Double-click on the hardware address of the device you want to configure.

   You will see the New Entry pop-up window with the device's Ethernet Address (MAC).

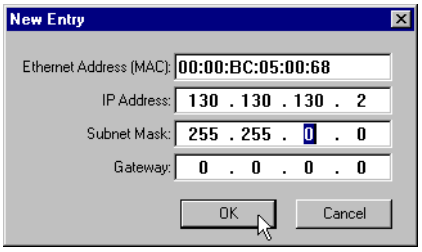

3. Enter the IP Address, Subnet Mask, and Gateway you want to assign to the device, and click on OK.

The device will be added to the Relation List, displaying the Ethernet Address (MAC) and corresponding IP Address, Subnet Mask, and Gateway (if applicable).

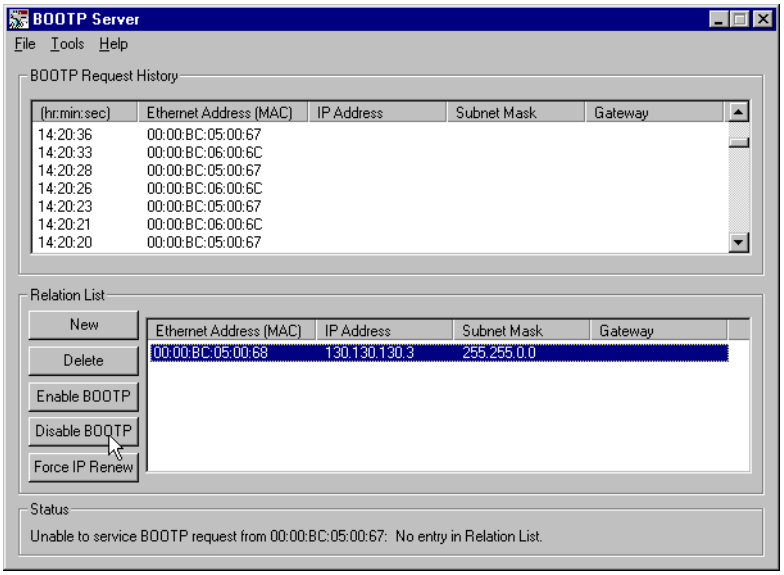

Using DCHP Software To Configure Your Processor

DHCP software automatically assigns IP addresses to client stations logging onto a TCP/IP network. DHCP is based on BOOTP and maintains some backward compatibility. The main difference is that BOOTP was designed for manual configuration, while DHCP allows for dynamic allocation of network addresses and configurations to newly attached devices.

Be cautious about using DHCP software to configure your SLC 5/05 processor. A BOOTP client can boot from a DHCP server only if the DHCP server is specifically written to also handle BOOTP queries. This is specific to the DHCP software package you use. Check with your system administrator to see if your DHCP package supports BOOTP commands and manual IP allocation.

ATTENTION

The processor must be assigned a fixed network address. The IP address of the processor must not be dynamically provided. Failure to observe this precaution may result in unintended machine motion or loss of process control.

Using Subnet Masks and Gateways

Configure subnet masks and gateways by using the Ethernet channel 1 configuration screen.

IMPORTANT If BOOTP is enabled, you can't change any of the advanced Ethernet communication characteristics.

If your network is divided into subnetworks that use gateways or routers, you must indicate the following information when configuring channel 1.

- Subnet mask
- Gateway address

A subnet mask is a filter that a node applies to IP addresses to determine if an address is on the local subnet or on another subnet. If an address is on another subnetwork, messages are routed through a local gateway to be transferred to the destination subnetwork.

If your network is not divided into subnets, then leave the subnet mask field at the default.

Subnet Mask Tasks

If you are	Then
manually configuring channel 1 and have a network with subnets	• be sure the BOOTP enable field is disabled. • use your programming software to enter the subnet mask and gateway address.
using BOOTP to configure channel 1 and have a network with subnets	• be sure BOOTP is enabled. • include the subnet mask(s) and gateway address(es).

Manually Configuring Channel 1 for Processors on Subnets

If you are manually configuring channel 1 for a processor on a subnet, deselect BOOTP Enable option by unchecking that checkbox.

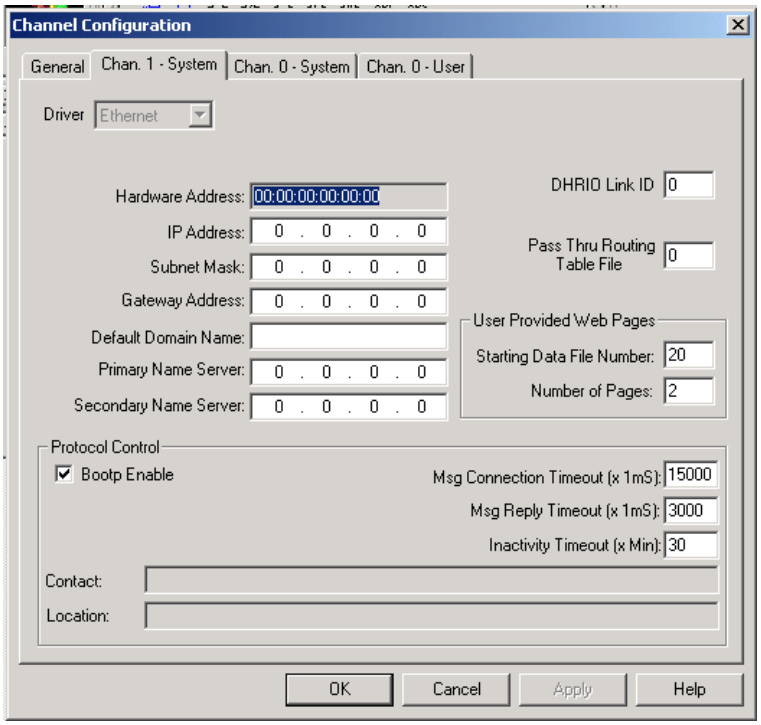

See the table below to configure the subnet mask and gateway address fields for each processor via your programming software.

Configure Subnet Task and Gateway Field

This field	Specifies	Configure by doing the following
Subnet Mask	The processor's subnet mask. The subnet mask is used to interpret IP addresses when the internet is divided into subnets.	Enter an address of the following form: a.b.c.d Where: a, b, c, d are between 0...255 (decimal) If your network is not divided into subnets, then leave the subnet mask field at the default. If you change the default and need to reset it, type 0.0.0.0.
Gateway Address	The IP address of the gateway that provides a connection to another IP network. This field is required when you communicate with other devices not on a local subnet.	Enter an address of the following form: a.b.c.d Where: a, b, c, d are between 0...255 (decimal) The default address is No Gateway.

SLC 5/05 Processor Embedded Web Server Capability

SLC 5/05 processors with OS501, Series C, FRN 6 (or later) include not only the embedded web server (introduced in FRN 5), which allows viewing of module information, TCP/IP configuration, and diagnostic information, but an enhanced version that also allows viewing of the data table memory map, data table monitor screen, and user-provided web pages via Ethernet by using a standard web browser.

To view the web server main menu from a standard web browser, type in http://www.xxx.yyy.zzz for the web address, where www.xxx.yyy.zzz is the IP address of the SLC 5/05 processor.

The following topics appear on the home page main menu:

- Module Information
- TCP/IP Configuration
- Diagnostic Information
- Data Table Memory Map
- Data Table Monitor
- User Provided Pages

Home Page Menu

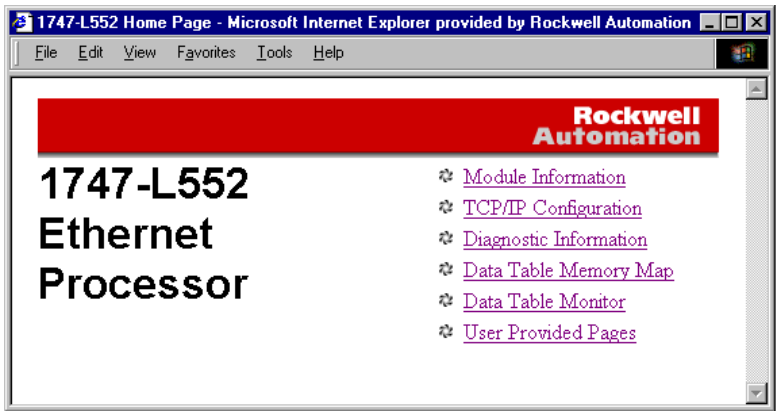

Module Information

The module information page displays a table with information about the processor. The specific information displayed includes the processor model, series/revision of the processor, mode of the processor and the name of the program in the processor. Also displayed is the revision/build of the Ethernet firmware and the module uptime (time since power was last applied).

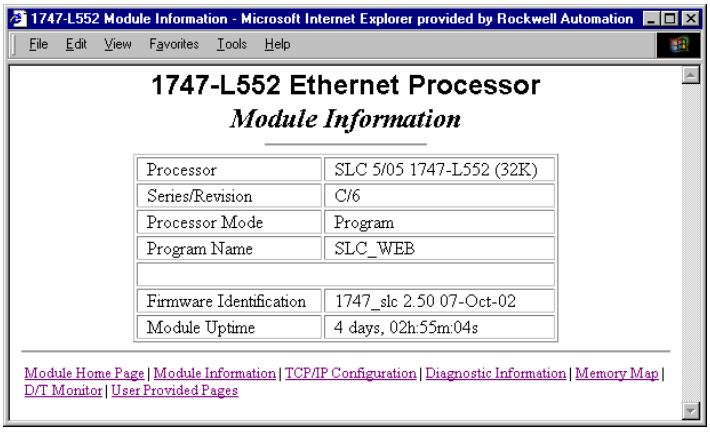

TCP/IP Configuration Data (Read Only)

This page displays a table with information about the current TCP/IP configuration parameters. Included are the module's IP address, the subnet mask, gateway address, the Ethernet hardware address and whether BOOTP is enabled. Also included are the name server, secondary name server and the default domain name parameters, if configured.

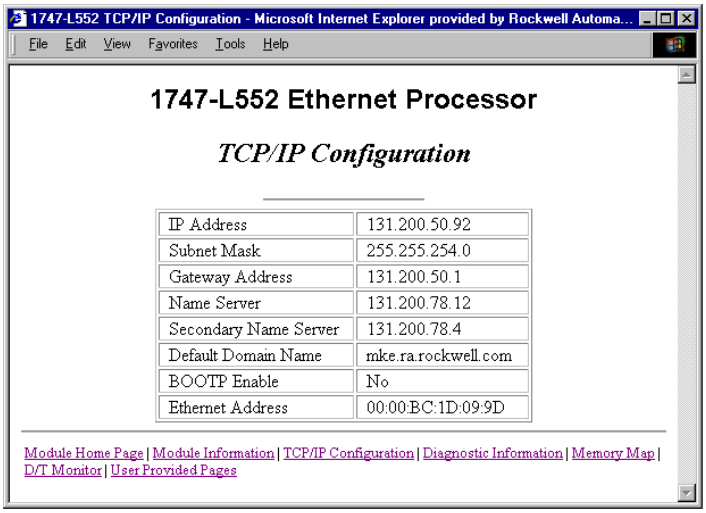

Diagnostic Information

This section gives you access to the various diagnostic information screens that are available. It is divided into two sections, the Network Stack Statistics and Application Level Statistics. The Network Stack Statistics detail information about the TCP/IP stack, while the Application Level Statistics are related to the Allen-Bradley Client Server Protocol (CSP) and Control and Information Protocol (CIP) diagnostics.

The individual diagnostic screens automatically refresh using a time which is configurable by you and defaults to 15 seconds.

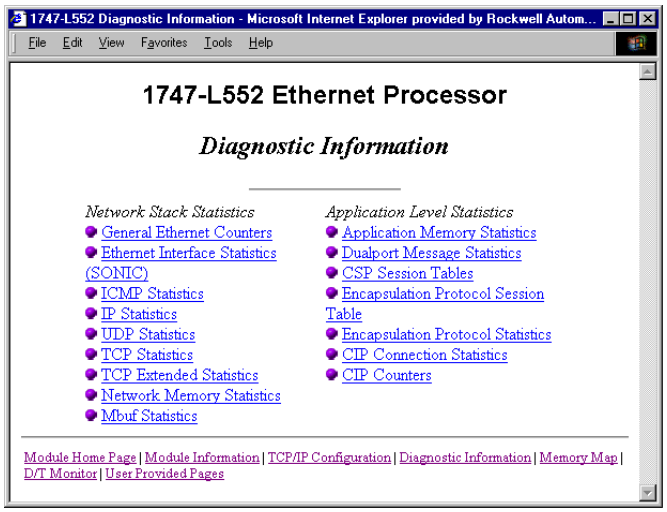

Data Table Memory Map

The Data Table Memory Map page displays a list of the data table files, their type, and size in elements for a connected SLC 5/05 processor.

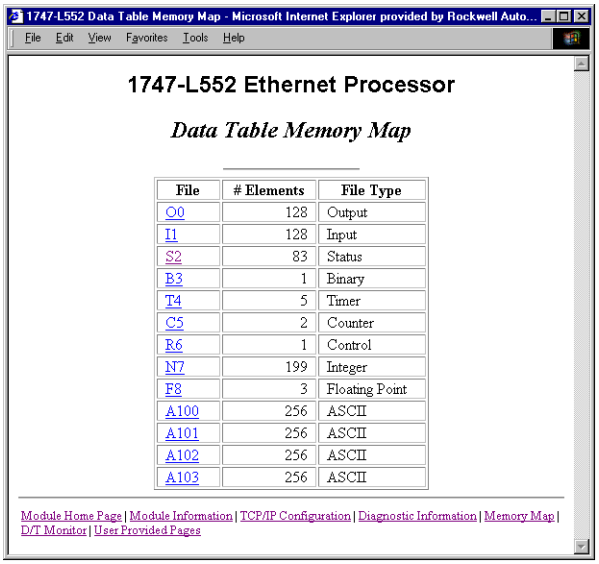

File	# Elements	File Type
O0	128	Output
I1	128	Input
S2	83	Status
B3	1	Binary
T4	5	Timer
C5	2	Counter
R6	1	Control
N7	199	Integer
F8	3	Floating Point
A100	256	ASCII
A101	256	ASCII
A102	256	ASCII
A103	256	ASCII

Each file contains a hyperlink that takes you to the specific Data Table Monitor page for that file. When you click on a particular file, the Data Table Monitor page appears, displaying the contents of the data table file you selected.

Data Table Monitor

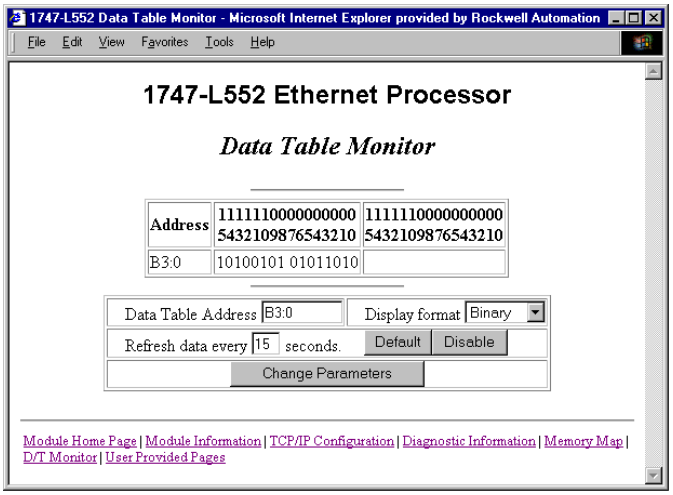

The available and default display formats depend on the data type of the file.

Press Prev or Next to display the previous or next page of the data table file, if any.

You can change the Data Table Address, Display format and Refresh data every *xx* seconds fields by entering data in the text boxes and clicking Change Parameters.

To change the refresh data function back to the default of 15 s, click Default. To disable the refresh data function, click Disable.

Data Table Monitor

You may also go directly to the Data Table Monitor screen by selecting it on the home page or by clicking on D/T Monitor on the bottom row of the other pages. In this case, since a particular data file has not been chosen, a default screen is displayed.

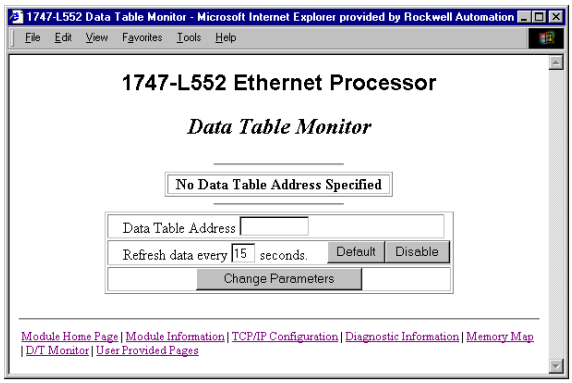

From here you may enter in the starting data table address to display.

User Provided Pages

You can use a text editor to generate up to 16 user-provided web pages. Each page is stored in four consecutive ASCII files of the SLC 5/05 processor. The channel configuration feature of RSLogix 500 software (version 6.0 or later), lets you select the starting file number and the number of user pages to be stored.

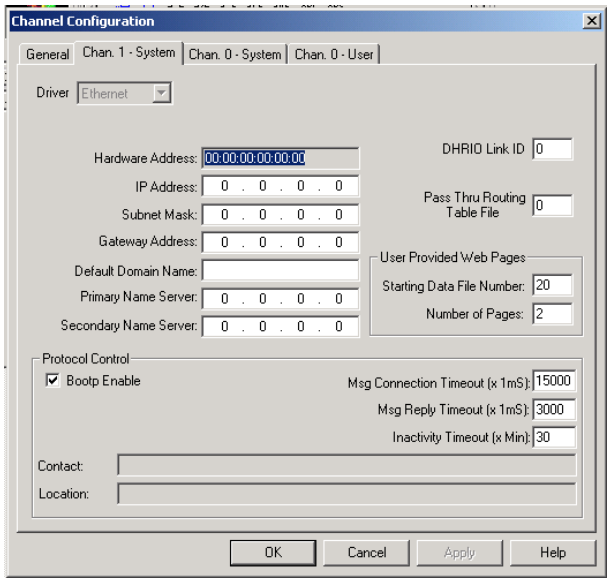

RSLogix 500 software (version 6.0 or later) also lets you import an HTML file from your personal computer to specified ASCII files in the SLC 5/05 processor. See page 257 for details.

HTML Pages

Referencing Other Pages/Servers - following are some basic considerations when referencing other pages or servers:

- reference user-specified pages in the SLC 5/05 processor by using the names user1.html...user16.html
- to reference a page on the same processor, specify a URL such as /user2.html
- to reference a page on another processor, specify a URL such as http://*www.xxx.yyy.zzz*/user2.html, where www.*xxx.yyy.zzz* is the IP address of the processor
- you can reference other WWW servers and display images from other sources without affecting your usage of data table memory (except for the size of the HTTP reference)

Referencing Data Table Memory - reference data table memory locations by placing custom tags into your HTML source which specify

the data table location and optional formatting information. Use the following format for the custom tag:

<!ABDTR-file_type{file_number}:{file_element}[,#elements][%format]>

The items surrounded by {} are sometimes optional. The items surrounded by [] are always optional.

You must always specify the basic file reference. Depending on which file is being referenced, file_number or file_element may be defaulted. If the file_type is I, O or S, the file_number does not need to be specified, but the file_element must be specified. If the file_type is not one of the three special files, the file_number must be specified and the file_element may default to zero (the input, output and status files have fixed file numbers).

When defining your custom tag, consider the following items.

Custom Tag Considerations

Tag Item	Description
#elements	If not specified, this defaults to one. If it is less than one, it also defaults to one. Each element is output using the same format (whether specified with % format or defaulted).
%format	Legal values are **%**d for decimal and **%**x for hexadecimal. The following file types allow the format to be specified: • Input • Output • Status • Integer • Timer • Counter • Control
Display format defaults	Input and output file elements are output in decimal format. Status file elements are output in hexadecimal format with a leading 0x. Integer file elements are output in decimal format. Complex data types (Timer, Counter, Control) are output as a table with bits and important words specified.
Fixed display formats	Float files are always output in floating point format (C%g format). ASCII and STring files are always output as a null terminated text string. Binary files are always output as two binary bytes.

HTML Examples - the following example shows an HTML code segment with a short description of what you would see on a web browser.

HTML Code

Examples	HTML Code	Web browser displays
Input image word I:0	<!ABDTR-I:0>	the value of the first word of the input image table in the default format of decimal with bold type.
Timer T4:0	<!ABDTR-T4:0>	the values of the timer in T4:0 in the default format of a table.
Timer T4:0	<!ABDTR-T4:0%d>	the values of the three words comprising timer T4:0 in decimal with bold type.
N24:0 to N24:3	<!ABDTR-N24:0,4>	the values of the four words in N24:0 through N24:3 in decimal with bold type.
S:21 to S:23	<!ABDTR-S:21, 3%d>	the values of the three words in S:21 through S:23 in decimal with bold type.

Generating Custom Data Table Monitor Pages

You can generate Custom Data Table Monitor pages with your text editor then download them to the SLC 5/05 processor using RSLogix 500 version 6.0 or later. The first element of the file must contain a special tag as follows:

<!ABCDM-*xx*>

where *xx* is the automatic refresh rate in seconds (01...99).

A value outside the range defaults to a snapshot display.
You can modify the refresh rate three different ways:

- Enter the desired refresh rate and press Change
- Select Default for a 15 second refresh
- Disable the refresh by selecting Disable

Referencing Data Table Memory - the Data Table locations in the Custom Data Table Monitor are referenced by placing custom tags into the ASCII file of the processor. The format of the custom tag is:

<!ABDTR-file_type{file_number}:{file_element}[,#elements][%format][#expand][!comment]>

The items surrounded with {} are sometimes optional, whereas the items surrounded by [] are always optional.

You must always specify the basic file reference. Depending on which file is being referenced, file_number or file_element may be defaulted. If the file_type is I, O or S, the file_number does not need to be specified, but the file_element must be specified. If the file_type is not one of the three special files, the file_number must be specified and the file_element may default to zero (because the input, output and status files have fixed numbers).

Tag Elements

Tag Item	Description
#elements	If not specified, this defaults to one. If it is less than one, also defaults to one. Each element is output using the same format (whether specified with %format or defaulted). Any associated comment is displayed only for the first element.
%format	Legal values are **%**b for binary**, %**d for decimal, %0 for octal and **%**x for hexadecimal. The following file types allow the format to be specified: • Input • Status • Output • Integer All other file types are displayed in an appropriate format. If a %format modifier is present, the format may be changed by clicking on the file type/number via a web browser.
#expand	Legal values are #c and #e. This modifier determines whether the structure file types are displayed in their expanded or compact formats. If a # modifier is present, the format may be changed by clicking on the [+]/[-] via a web browser. If a #modifier is not present, the default display of expanded is used.
!comment	Data after the exclamation point and up to the closing > is displayed in the Comment column of the monitor.
Fixed display formats	Float files are always output in floating point format (C%g format). String files are always output as a null terminated text string. Binary files are always output as four binary nibbles. ASCII files are displayed in a memory dump format.

Importing User Page Files to the SLC 5/05 Processor

Follow this procedure to use RSLogix 500 software to import user page files to the SLC 5/05 ASCII files.

1. In the Project folder (under the Data Files folder), right-click on the first of the block of four consecutive ASCII files where you will import the user page HTML file.
2. Click Properties.
3. Click Import HTML.
4. Use the browser to locate the user page HTML file you want to import.
5. Double-click on the file to select it.
6. Click OK.
7. Repeat this process for each user page file.

8. When all user page files have been imported, go online with your SLC 5/05 processor.

9. Select the User provided Pages link to view the User Provided Pages menu.

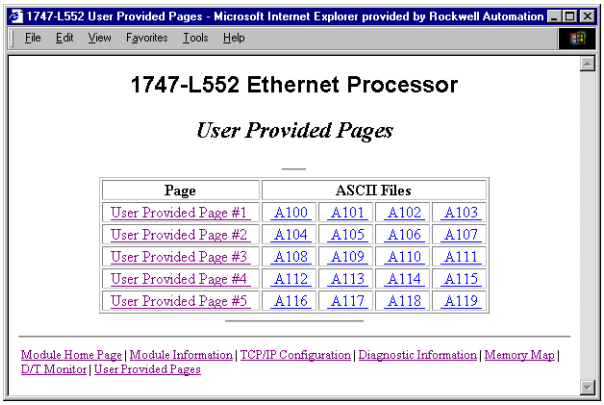

Click the User Provided Page #X to display that specific page.

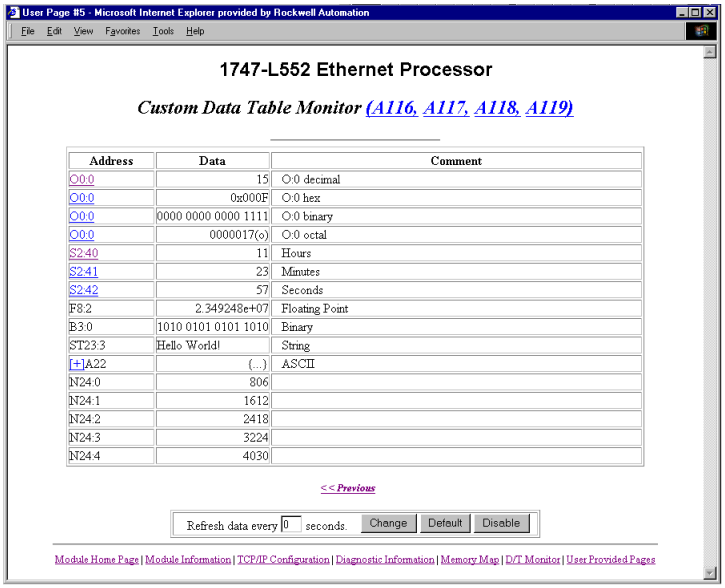

You can change the radix display of I, O, S, and N file addresses, which appear with an underline.

1. Go back to the User-Provided Custom Data Table Monitor page.

2. In the Address column, click on an underlined address to display the radix selection page.

3. Click on a radio button to select the desired radix type.

Follow this procedure to see the Sample Extended Format page.

1. Go back to the User-Provided Custom Data Table Monitor page.
2. In the Address column, click + before an address to display the Sample Extended Format.

Click the link under the file heading to display an ASCII dump of the ASCII file. For example, click A116. This screen appears.

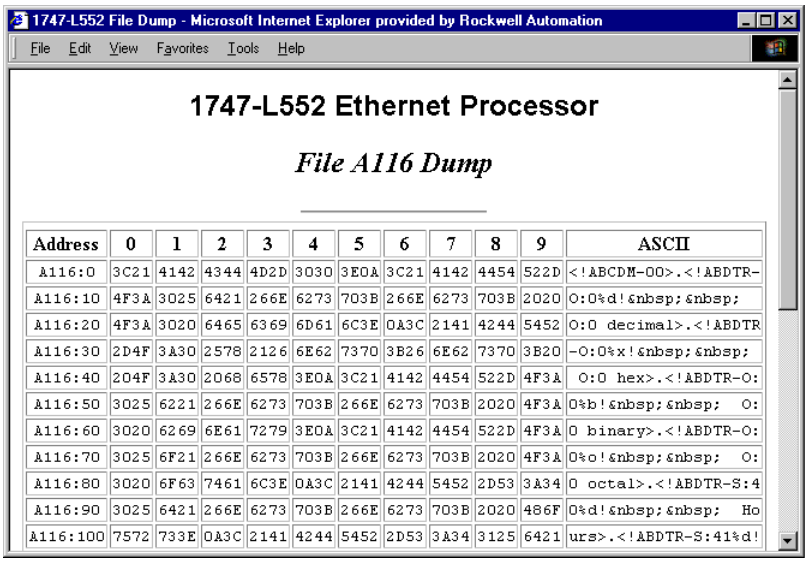

1747-L552 Ethernet Processor

File A116 Dump

Address	0	1	2	3	4	5	6	7	8	9	ASCII
A116:0	3C21	4142	4344	4D2D	3030	3E0A	3C21	4142	4454	522D	<!ABCDM-00>.<!ABDTR-
A116:10	4F3A	3025	6421	266E	6273	703B	266E	6273	703B	2020	O:0%d!
A116:20	4F3A	3020	6465	6369	6D61	6C3E	0A3C	2141	4244	5452	O:0 decimal>.<!ABDTR
A116:30	2D4F	3A30	2578	2126	6E62	7370	3B26	6E62	7370	3B20	-O:0%x!
A116:40	204F	3A30	2068	6578	3E0A	3C21	4142	4454	522D	4F3A	O:0 hex>.<!ABDTR-O:
A116:50	3025	6221	266E	6273	703B	266E	6273	703B	2020	4F3A	0%b! O:
A116:60	3020	6269	6E61	7279	3E0A	3C21	4142	4454	522D	4F3A	0 binary>.<!ABDTR-O:
A116:70	3025	6F21	266E	6273	703B	266E	6273	703B	2020	4F3A	0%o! O:
A116:80	3020	6F63	7461	6C3E	0A3C	2141	4244	5452	2D53	3A34	0 octal>.<!ABDTR-S:4
A116:90	3025	6421	266E	6273	703B	266E	6273	703B	2020	486F	0%d! Ho
A116:100	7572	733E	0A3C	2141	4244	5452	2D53	3A34	3125	6421	urs>.<!ABDTR-S:41%d!

Notes:

Calculating Heat Dissipation for the SLC 500 Control System

This appendix will assist you in calculating the heat dissipation of your SLC 500 controller. It consists of:

- a definition of key term.
- a table and graph.
- an example heat dissipation calculation.
- a heat dissipation worksheet.

To select an enclosure see page 40.

Definition of Key Terms

We use these terms throughout this appendix. Familiarize yourself with them before proceeding further.

Watts per Point - maximum heat dissipation that can occur in each field wiring point when energized.

Minimum Watts - amount of heat dissipation that can occur when there is no field power present.

Total Watts - the watts per point plus the minimum watts (with all points energized).

Calculating Module Heat Dissipation

To calculate the heat dissipation of your SLC controller you must consider:

- the maximum heat dissipated (with field power applied) by the processor, all I/O and specialty modules, and any peripheral devices for each chassis.

- the heat dissipated by the power supply. This is determined by the maximum load on the power supply of the processor, each I/O and specialty module, peripheral device, and device drawing power directly off the power supply via the POWER OUT terminals.

Calculated Watts vs. Total Watts

You calculate maximum heat dissipation by using one of these methods.

- Calculated watts method
- Total watts method

Use calculated watts if you know exactly how many outputs and inputs on each card are active at any given time. This method will give you a lower, more accurate heat dissipation calculation than the total watts method. With this method, use the formula below for calculating the heat dissipation of each module. Then use these values in step 1 of the Example Worksheet for Calculating Heat Dissipation on page 268.

(points energized x watts per point) + minimum watts = heat dissipation of module

Use total watts if you are not sure how many points on a module are energized at any time. Total watts is the watts per point (with all points energized) plus the minimum watts. Total watts generated by each module are provided in the table on page 263.

Once you have determined which method you will use to calculate the heat dissipation of your modules, see the Example Worksheet for Calculating Heat Dissipation on page 268. This worksheet shows you how to calculate the heat dissipation for the example SLC control system on page 267.

Power Supply Loading Reference Table

Use the table to calculate the power supply loading and heat dissipation for each chassis in your SLC modular application.

Hardware Component	Cat. No.	Watts per Point	Minimum Watts	Total Watts
Processors	**1747-L511**	NA	1.75	1.75
	1747-L514	NA	1.75	1.75
	1747-L524	NA	1.75	1.75
	1747-L531	NA	2.90	2.90
	1747-L532	NA	2.90	2.90
	1747-L533	NA	2.90	2.90
	1747-L541	NA	4.00	4.00
	1747-L542	NA	4.00	4.00
	1747-L543	NA	4.00	4.00
	1747-L551	NA	4.00	4.00
	1747-L552	NA	4.00	4.00
	1747-L553	NA	4.00	4.00
Digital Input Modules	**1746-IA4**	0.270	0.175	1.30
	1746-IA8	0.270	0.250	2.40
	1746-IA16	0.270	0.425	4.80
	1746-IB8	0.200	0.250	1.90
	1746-IB16	0.200	0.425	3.60
	1746-IB32[(1)]	0.200	0.530	6.90
	1746-IC16	0.220	0.425	3.95
	1746-IG16	0.020	0.700	1.00
	1746-IH16	0.320	0.217	5.17
	1746-IM4	0.350	0.175	1.60
	1746-IM8	0.350	0.250	3.10
	1746-IM16	0.350	0.425	6.00
	1746-IN16	0.350	0.425	6.00
	1746-ITB16	0.200	0.425	3.625
	1746-ITV16	0.200	0.425	3.625
	1746-IV8	0.200	0.250	1.90
	1746-IV16	0.200	0.425	3.60
	1746-IV32[(1)]	0.200	0.530	6.90

Hardware Component	Cat. No.	Watts per Point	Minimum Watts	Total Watts
Digital Output Modules	**1746-OA8**	1.000	0.925	9.00
	1746-OA16	0.462	1.850	9.30
	1746-OAP12	1.000	1.850	10.85
	1746-OB6EI	0.440	0.230	2.90
	1746-OB8	0.775	0.675	6.90
	1746-OB16	0.150	0.675	3.07
	1746-OB16E	0.338	1.400	7.60
	1746-OB32[(1)]	0.078	2.260	4.80
	1746-OB32E	0.078	2.260	4.80
	1746-OBP8	0.300	0.675	3.08
	1746-OBP16	0.310	1.250	6.21
	1746-OG16	0.033	0.900	1.50
	1746-OV8	0.775	0.675	6.90
	1746-OV16	0.388	1.400	7.60
	1746-OV32[(1)]	0.078	2.260	4.80
	1746-OVP16	0.310	1.250	6.21
	1746-OW4	0.133	1.310	1.90
	1746-OW8	0.138	2.590	3.70
	1746-OW16	0.033	5.170	5.70
	1746-OX8	0.825	2.590	8.60
Digital Combination Modules	**1746-IO4**	0.270 per input pt. 0.133 per output pt.	0.750	1.60
	1746-IO8	0.270 per input pt. 0.133 per output pt.	1.380	3.00
	1746-IO12	0.270 per input pt. 0.133 per output pt.	2.130	4.60
	1746-IO12DC	0.200 per input pt. 0.133 per output pt.	1.840	3.90
Analog Input Modules	**1746-NI4**	NA	2.170	2.20
	1746-NI8	NA	3.4	3.4
	1746-NI16I	NA	2.43	2.43
	1746-NI16V	NA	3.760	3.80
Analog Output Modules	**1746-NO4I**	NA	4.960	5.00
	1746-NO4V	NA	3.780	3.80
	1746-NO8I	NA	2.44	6.6
	1746-NO8V	NA	1.98	4.44
Analog Combination Modules	**1746-FIO4I**	NA	3.760	3.800
	1746-FIO4V	NA	3.040	3.100
	1746-NIO4I	NA	3.760	3.80
	1746-NIO4V	NA	3.040	3.10

Hardware Component	Cat. No.	Watts per Point	Minimum Watts	Total Watts
Specialty Modules	**1746-BAS**	NA	3.750	3.800
	1746-BLM	NA	5.00	5.00
	1746-BTM	NA	2.59	2.59
	1746-HSCE	NA	1.600	1.600
	1746-HSCE2	NA	1.25	1.25
	1746-HSRV	NA	1.50	1.50
	1746-HSTP1	NA	1.50	1.50
	1746-INT4	NA	1.26	1.26
	1746-NR4	NA	1.500	1.500
	1746-NR8	NA	1.82	1.82
	1746-NT4	NA	0.800	0.800
	1746-NT8	NA	2.28	2.28
	1746-QS	NA	9.80	9.80
	1746-QV	NA	1.075	1.075
Communication Modules	**1747-ACN15**	NA	4.5	4.5
	1747-ACNR15	NA	4.5	4.5
	1747-ASB	NA	1.875	1.875
	1747-BSN	NA	4.0	4.0
	1747-DCM	NA	1.800	1.800
	1747-KE	NA	3.750	3.800
	1747-KFC15	NA	3.200	3.200
	1747-SCNR	NA	4.5	4.5
	1747-SDN	NA	2.5	2.5
	1747-SN	NA	4.500	4.500
Peripheral Devices	**1747-AIC**	NA	2.000	2.000
	1747-DTAM	NA	2.500	2.500
	1747-PIC	NA	2.000	2.000
	1747-PSD	NA	NA	NA
	1761-NET-AIC(2)	NA	2.500	2.500
	1761-NET-DNI	NA	2.500	2.500
	1761-NET-ENI(W)(2)	NA	2.000	2.000

(1) Power supply loading for Series D and later modules.

(2) Current for the 1761-NET-AIC and 1761-NET-ENI may be supplied from the SLC power supply or from an external 24V dc source.

Power Supply Heat Dissipation Graphs

Use the graphs below for determining the power supply dissipation in step 2 of the Example Worksheet for Calculating Heat Dissipation.

1746-P1 Power Supply Change in Power Dissipation due to Output Loading

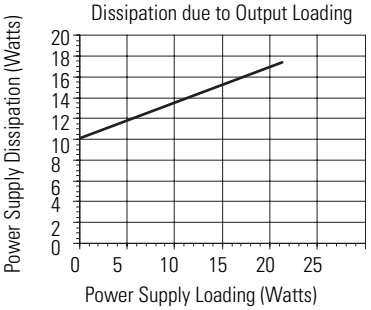

1746-P2 Power Supply Change in Power Dissipation due to Output Loading

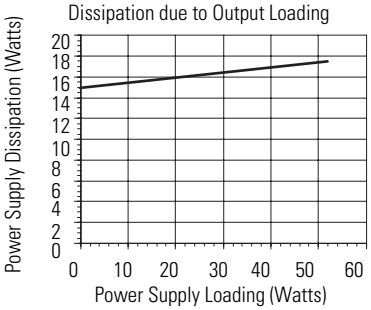

1746-P3 Power Supply Change in Power Dissipation due to Output Loading

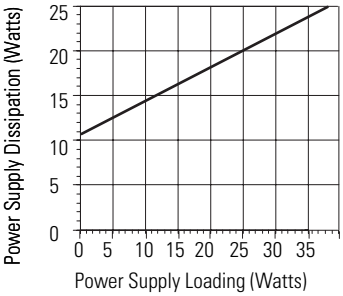

1746-P4 Power Supply Change in Power Dissipation due to Output Loading

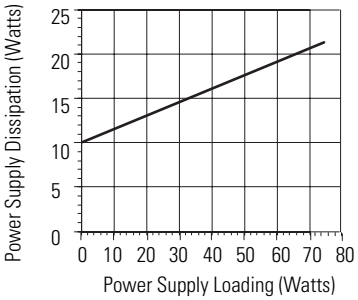

1746-P5 Power Supply Change in Power Dissipation due to Output Loading

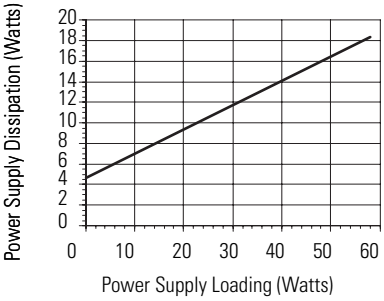

1746-P6 Power Supply Change in Power Dissipation due to Output Loading

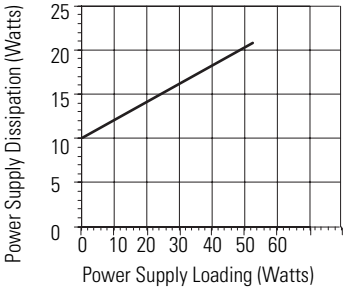

1746-P7 Power Supply Change in Power Dissipation due to Output Loading

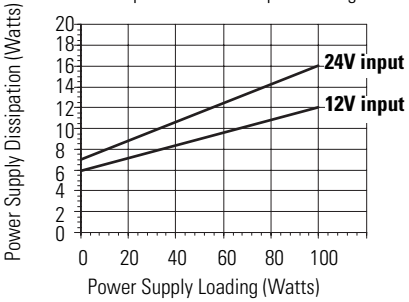

Example Heat Dissipation Calculation

If your controller consisted of the following hardware components, you would calculate heat dissipation as shown in the worksheet on page 268.

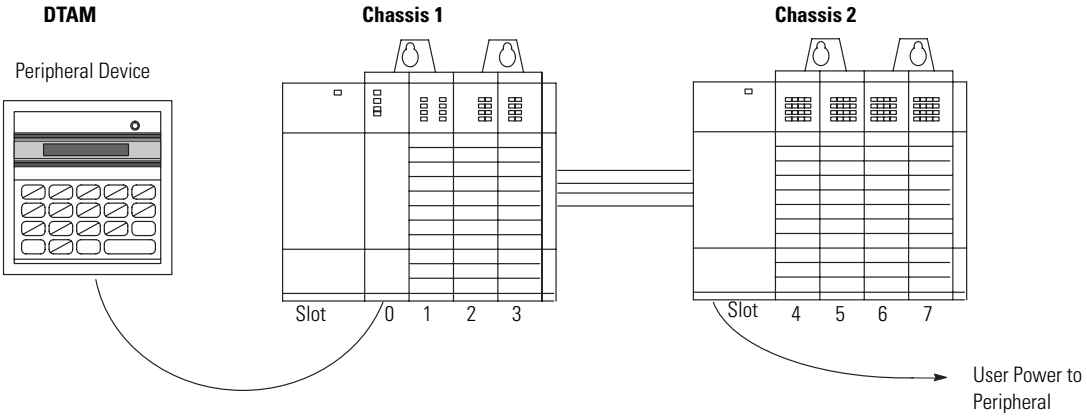

The following table details the total watts dissipated by the modules and peripheral devices in the above SLC 500 controller. The numbers were taken from the tables on page 263.

Chassis 1				Chassis 2			
Slot Number	**Cat. No.**	**Min Watts**	**Max Watts**	**Slot Number**	**Cat. No.**	**Min Watts**	**Max Watts**
0	1747-L511	1.75	1.75	4	1746-IA16	0.425	4.800
1	1746-BAS	3.750	3.80	5	1746-IA16	0.425	4.800
2	1746-IA8	0.250	2.40	6	1746-OW16	5.170	5.500[2]
3	1746-OV8	0.675	6.90	7	1746-OW16	5.170	5.700
Peripheral Device	1747-DTAM	2.500	2.50	NA	NA	NA	NA
User Power to Peripheral	NA	NA	NA	NA	NA	2.400[1]	NA

(1) The user power on the 1746-P1 power supply for chassis 2 is being used to power a peripheral (100 mA at 24V dc).

(2) This output card uses 5.5 W because only 10 points are on at any one time. Using the calculated watts formula - (number of points energized x watts per point) + minimum watts = heat dissipation of module - the calculated watts for the 1746-OW16 module is 5.5 W: (10 points x.33) + 5.17 = 5.5 W.

Example Worksheet

Procedure for calculating the total heat dissipation for the controller								
1. Write in the total watts dissipated by the processor, I/O, and speciality modules, and any peripheral devices attached to the processor.								
Chassis Number 1			**Chassis Number 2**			**Chassis Number 3**		
Slot	**Cat. No.**	**Heat Dis (Watts)**	**Slot**	**Cat. No.**	**Heat Dis (Watts)**	**Slot**	**Cat. No.**	**Heat Dis (Watts)**
0	*1747-L511*	*1.75*	*4*	*1746-IA16*	*4.8*			
1	*1746-BAS*	*3.8*	*5*	*1746-IA16*	*4.8*			
2	*1746-IA8*	*2.4*	*6*	*1746-OW16*	*5.5*			
3	*1746-OV8*	*6.9*	*7*	*1746-OW16*	*5.7*			
Peripheral Dev	*1747-DTAM*	*2.5*	Peripheral Dev			Peripheral Dev		
Peripheral Dev			Peripheral Dev			Peripheral Dev		
2.Add the heat dissipation values together for your total chassis heat dissipation.		***17.35***	2.Add the heat dissipation values together for your total chassis heat dissipation.		***20.8***	2.Add the heat dissipation values together for your total chassis heat dissipation.		
3.Calculate the power supply loading for each chassis (minimum watts) for each device.[1]								
Chassis Number 1			**Chassis Number 2**			**Chassis Number 3**		
Slot	**Cat. No.**	**Heat Dis (Watts)**	**Slot**	**Cat. No.**	**Heat Dis (Watts)**	**Slot**	**Cat. No.**	**Heat Dis (Watts)**
0	*1747-L511*	*1.75*	*4*	*1746-IA16*	*0.425*			
1	*1746-BAS*	*3.75*	*5*	*1746-IA16*	*0.425*			
2	*1746-IA8*	*0.25*	*6*	*1746-OW16*	*5.17*			
3	*1746-OV8*	*0.675*	*7*	*1746-OW16*	*5.17*			
User Power			User Power		*2.4*	User Power		
Peripheral Dev	*1747-DTAM*	*2.5*	Peripheral Dev			Peripheral Dev		
4.Add the heat dissipation values together for your power supply loading.		***8.925***	4.Add the heat dissipation values together for your power supply loading.		***13.59***	4.Add the heat dissipation values together for your power supply loading.		
5.Use the power supply loading (step 4) for each chassis and the graphs on page 266 to determine power supply dissipation.		***13.0***	5.Use the power supply loading (step 4) for each chassis and the graphs on page 266 to determine power supply dissipation.		***15.0***	5.Use the power supply loading (step 4) for each chassis and the graphs on page 266 to determine power supply dissipation.		
6.Add the chassis dissipation (step 2) to the power supply dissipation (step 5).		***30.35***	6.Add the chassis dissipation (step 2) to the power supply dissipation (step 5).		***35.8***	6.Add the chassis dissipation (step 2) to the power supply dissipation (step 5).		
7.Add the values together from step 6 across to the right.								***66.15***
8.Covert the value from step 7 to BTUs/hr by multiplying the total heat dissipation of your controller by 3.414.								***225.84***

(1) If you have a device connected to user power, multiply 24V dc by the amount of current used by that device. Include user power in the total power supply loading.

Blank Worksheet

Procedure for calculating the total heat dissipation for the controller								
1. Write in the total watts dissipated by the processor, I/O, and speciality modules, and any peripheral devices attached to the processor.								
Chassis Number 1			**Chassis Number 2**			**Chassis Number 3**		
Slot	**Catalog No.**	**Heat Dis (Watts)**	**Slot**	**Catalog No.**	**Heat Dis (Watts)**	**Slot**	**Catalog No.**	**Heat Dis (Watts)**
Peripheral Dev			Peripheral Dev			Peripheral Dev		
Peripheral Dev			Peripheral Dev			Peripheral Dev		
2.Add the heat dissipation values together for your total chassis heat dissipation.			2.Add the heat dissipation values together for your total chassis heat dissipation.			2.Add the heat dissipation values together for your total chassis heat dissipation.		
3.Calculate the power supply loading for each chassis (minimum watts) for each device.[1]								
Chassis Number 1			**Chassis Number 2**			**Chassis Number 3**		
Slot	**Catalog No.**	**Heat Dis (Watts)**	**Slot**	**Catalog No.**	**Heat Dis (Watts)**	**Slot**	**Catalog No.**	**Heat Dis (Watts)**
User Power			User Power			User Power		
Peripheral Dev			Peripheral Dev			Peripheral Dev		
4.Add the heat dissipation values together for your power supply loading.			4.Add the heat dissipation values together for your power supply loading.			4.Add the heat dissipation values together for your power supply loading.		
5.Use the power supply loading (step 4) for each chassis and the graphs on page 266 to determine power supply dissipation.			5.Use the power supply loading (step 4) for each chassis and the graphs on page 266 to determine power supply dissipation.			5.Use the power supply loading (step 4) for each chassis and the graphs on page 266 to determine power supply dissipation.		
6.Add the chassis dissipation (step 2) to the power supply dissipation (step 5).			6.Add the chassis dissipation (step 2) to the power supply dissipation (step 5).			6.Add the chassis dissipation (step 2) to the power supply dissipation (step 5).		
7.Add the values together from step 6 across to the right.								
8.Covert the value from step 7 to BTUs/hr by multiplying the total heat dissipation of your controller by 3.414.								

(1) If you have a device connected to user power, multiply 24V dc by the amount of current used by that device. Include user power in the total power supply loading.

Notes:

We use the following terms throughout this manual. Refer to the Allen-Bradley Industrial Automation Glossary, publication AG-7.1, for a complete guide to Allen-Bradley technical terms.

address

A character string that uniquely identifies a memory location. For example, I:1/0 is the memory address for data in Input file word 1, bit 0.

AIC+ Advanced Interface Converter

A device that provides RS-232 isolation to an RS-485 half-duplex communication link. (catalog number 1761-NET-AIC.)

application

1) A machine or process monitored and controlled by a controller.
2) The use of computer- or processor-based routines for specific purposes.

auto answer

Type of modem that has self-contained timeouts and tests. It can answer and terminate a call automatically.

backplane current draw

The amount of current the module requires from the backplane. The sum of the backplane current draw for all modules in a chassis is used to select the appropriate chassis power supply.

baud rate

The speed of communication between devices on a network. All devices must communicate at the same communication rate. For example, the DH-485 network devices default to 19.2 Kbaud.

bit

The smallest unit of memory used in discrete or binary logic, where the value 1 represents ON and 0 represents OFF.

block diagrams

A method used to illustrate logic components or a sequence of events.

Boolean operators

Logical operators such as AND, OR, NAND, NOR, NOT, and Exclusive-OR that can be used singularly or in combination to form logic statements or circuits. Can have an output response of T or F.

BOOTP (Bootstrap Protocol)

A low-level protocol that provides configuration information to other nodes on a TCP/IP network with DOS, Microsoft Windows, Windows NT, Windows 9x, VMS, and HP-UNIX platforms.

branch

A parallel logic path within a rung of a ladder program. Its primary use is to build OR logic.

calculated watts

The amount of heat generated by those points energized on an I/O module.

channel

Communication port on a module.

chassis

A hardware assembly that houses devices such as I/O modules, adapter modules, processor modules, and power supplies.

communication scan

A part of the controller's operating cycle. Communication with devices (such as other controllers and operator interface devices) takes place during this period.

continuous current per module

The maximum current for each module. The sum of the output current for each point should not exceed this value.

continuous current per point

The maximum current each output is designed to continuously supply to a load.

control program

User logic (the application) that defines the controller's operation.

controller

A device, such as a programmable controller, used to control output devices.

controller overhead

A portion of the operating cycle used for housekeeping purposes (for example, memory checks, tests, and communication).

control profile

The means by which a controller determines which outputs turn on under what conditions.

counter

A device that counts the occurrence of some event.

CPU (central processing unit)

The decision-making and data storage section of a programmable controller.

data table

The part of processor memory that contains I/O status and files where user data (such as bit, integer, timers, and counters) is monitored, manipulated, and changed for control purposes.

DHCP (Dynamic Host Configuration Protocol)

A protocol used to assign dynamic IP addresses to devices residing on a network.

DF1 protocol

A peer-to-peer link-layer protocol that combines features of ANSI X3.28-1976 specification subcategories D1 (data transparency) and F1 (two-way simultaneous transmission with embedded responses).

DIN rail

Manufactured according to Deutsche Industrie Normenausshus (DIN) standards, a metal railing designed to ease installation and mounting of your devices.

direct connect

Type of modem that is connected to a dedicated, leased phone line and is active at all times.

DH+

Data Highway Plus implements peer-to-peer communication with a token-passing scheme to rotate link mastership among the nodes connected to that link. Data Highway Plus has the capability for online programming and is optimized for networks with fewer nodes (Data Highway Plus supports up to 64 nodes).

DH-485 network

The DH-485 network is a collection of devices connected to the communication cable allowing information exchange. A communication network based on the EIA Standard for RS-485 using an Allen-Bradley proprietary protocol.

discrete input and output (DIO)

The discrete input and output is the transfer of one to 32 words between a SLC 500 processor and a scanner. All 32 words of input data and all 32 words of output data are updated on each SLC program scan.

download

The transfer of program or data files to a device.

DTE

Data Terminal Equipment.

DTE controlled answer

Type of modem that is unattended and is attached directly to the phone lines. The interface module or the SLC 5/03 processor acts as the Data Terminal Equipment (DTE) which controls the modem via the DTR and RTS signals. The module incorporates timeouts and tests to properly operate these types of modems.

DTR dialing (SLC 5/03 only)

Type of modem that lets you dial a number or end a call based on the status of the RS232 DTR (Data Terminal Ready) signal. To program the modem initialization string and phone number into the internal memory of the modem, use a dumb terminal (or personal computer running terminal emulation software like Procomm, Window's

Terminal, or PBASE). Once you have programmed the modem, activate the DTR signal to dial the number, or deactivate the DTR signal to end the call.

EEPROM

Electrically Erasable Programmable Read Only Memory module used to store, back-up, or transfer SLC 500 programs. The SLC 500 processor can read and write to an EEPROM.

EMI

Electromagnetic interference.

encoder

A device that detects position, and transmits a signal representing that position.

Ethernet network

A local area network with a baseband communication rate of 10M bits per second.

executing mode

Any run or test mode.

false

The status of an instruction that does not provide a continuous logical path on a ladder rung.

FIFO (first-in-first-out)

The order that data is stored and retrieved from a file.

file

A collection of data or logic organized into groups.

flash EPROM

Flash Erasable Programmable Read Only Memory module. It combines the programming versatility of EEPROMs with the security precautions of UVPROMs. This means that you have the option of leaving your EPROM programs write protected or unprotected.

full-duplex

A high-performance protocol that allows simultaneous two-way data transmission. For point-to-point applications only.

half-duplex

A high-performance protocol where data transmission is limited to one direction at a time. Used in point-to-point and multi-point applications.

hard disk

A storage device in a personal computer.

high byte

Bits 8...15 of a word.

housekeeping

The portion of the scan when the controller performs internal checks and services communication.

initiator

A node on the DH-485 network capable of acting as a master. When an initiator has the token it can send messages and request replies from any node on the DH-485 network. A personal computer running your programming software is an initiator on the data link. The SLC 5/02, SLC 5/03, SLC 5/04, and SLC 5/05 processors can also be initiators.

input device

A device, such as a push button or a switch, that supplies signals through input circuits to a programmable controller.

input scan

The controller reads all input devices connected to the input terminals.

inrush current

The temporary surge current produced when a device or circuit is initially energized.

instruction

A mnemonic defining an operation to be performed by the processor. A rung in a program consists of a set of input and output instructions. The input instructions are evaluated by the controller as being true or false. In turn, the controller sets the output instructions to true or false.

instruction set

The set of instructions available within a controller.

I/O

Inputs and Outputs

IP address

A 32-bit address assigned to hosts that want to participate in a TCP/IP internet. IP addresses are the abstraction of physical hardware addresses, with a network and host partition which makes routing efficient.

isolated link coupler

The link coupler provides an electrically isolated network connection for an SLC 500 controller (processor or programming station). The link couplers connect the daisy-chained DH-485 communication cable.

ladder logic

A graphical programming format resembling a ladder-like diagram. The ladder logic programing language is the most common programmable controller language.

least significant bit (LSB)

The element (or bit) in a binary word that carries the smallest value of weight.

LED indicator

Light emitting diode. Used as status indicator for processor functions and inputs and outputs.

LIFO (last-in-first-out)

The order that data is stored and retrieved from a file.

low byte

Bits 0...7 of a word.

logic

A general term for digital circuits or programmed instructions to perform required decision making and computational functions.

manual

Typically an acoustically coupled type of modem. The connection is established by a person on each end of the phone line. They then insert the handsets into an acoustic coupler to complete the connection.

master control relay (MCR)

A hard-wired relay that can be de-energized by any series-connected emergency stop switch.

mnemonic

A simple and easy to remember term that is used to represent a complex or lengthy set of information.

modem

Modulator/demodulator. Equipment that connects data terminal equipment to a communication line.

modes

Selected methods of operation. Example: run, test, or program.

maximum watts

The maximum amount of heat that the module generates with field power present.

minimum load current

The lowest amount of current the output is designed to operate at. Operating at or below this value is not reliable.

minimum watts

The amount of heat dissipation that can occur when there is no field power present.

multi-master network

A network in which more than one node has the ability to initiate communication and initialize the link.

M0/M1 file transfer

A M1/M0 file transfer is a method of moving large amounts of data between a SLC 500 processor and its scanner. It transfers files containing a maximum of 256 words and may take more than one SLC program scan to complete.

negative logic

The use of binary logic in such a way that 0 represents the desired voltage level.

network

A series of stations (nodes) connected by some type of communication medium. A network may be made up of a single link or multiple links.

node

Also called a station. An address or software location on the network.

nominal input current

The current at nominal input voltage.

normally closed

Contacts on a relay or switch that are closed when the relay is de-energized or deactivated. They are open when the relay is energized or the switch is activated.

normally open

Contacts on a relay or switch that are open when the relay is de-energized or the switch is deactivated. They are closed when the relay is energized or the switch is activated.

off-delay time

The OFF delay time is a measure of the time required for the controller logic to recognize that a signal has been removed from the input terminal of the controller. The time is determined by circuit component delays and by any applied filter.

offline

When a device is not scanning/controlling or when a programming device is not communicating with the controller.

offset

A continuous deviation of a controlled variable from a fixed point.

off-state current

For input circuits, the maximum amount of leakage current allowed from an input device in its off-state.

off-state leakage current

When a mechanical switch is opened (off-state), no current flows through the switch. Semiconductor switches and transient suppression components which are sometimes used to protect switches, have a small current flow when they are in the off state. This current is referred to as the off-state leakage current. To ensure reliable operation, the off-state leakage current rating must be less than the minimum operating current rating of the device that is connected.

off-state voltage (max)

The maximum input voltage level detected as an off condition by the input module.

on-delay time

The on-delay time is a measure of the time required for the controller logic to recognize that a signal has been presented at the input terminal of the controller.

one shot

A programming technique that sets a bit ON or OFF for one program scan.

online

When a device is scanning/controlling or when a programming device is communicating with the controller.

on-state voltage drop

The voltage developed across the output driver circuit during the on-state at maximum load current.

operating voltage

For inputs, the voltage range needed for the input to be in the On-state. For outputs, the allowable range of user-supplied voltage.

output device

A device, such as a pilot light or a motor starter coil, that is energized by the programmable controller.

output scan

The controller turns on, off, or modifies the devices connected to the output terminals.

PCCC (programmable controller communication commands)

points per common

The number of input or output points connected to a single return (common) or supply (vcc).

poll message

A poll message is a point-to-point transfer of data sent by the scanner that solicits a response from a single device. The device responds with its data bit and status bit.

processor

A Central Processing Unit. (See CPU.)

processor files

The set of program and data files resident in the controller.

program file

Areas within a processor that contain the logic programs. SLC controllers support multiple program files.

program mode

When the controller is not scanning the control program.

program scan

A part of the controller's operating cycle. During the program scan, the logic program is processed and the Output Image is updated.

programming device

Programming package used to develop ladder logic diagrams.

protocol

The language or packaging of information that is transmitted across a network.

(I/O) rack

An I/O addressing unit that corresponds to 8 input image-table words and 8 output image-table words. A rack can contain a maximum of 8 I/O groups for up to 128 discrete I/O.

read

To acquire data. For example, the processor reads information from other devices via a read message.

relay

An electrically operated device that mechanically switches electrical circuits.

relay logic

A representation of binary or discrete logic.

remote I/O network

A network where the communication between the processor and the I/O is across a serial link.

restore

To transfer a program from a device to a controller.

reserved bit

A location reserved for internal use.

retentive data

Information (data) that is preserved through power cycles.

RS-232

An EIA standard that specifies electrical, mechanical, and functional characteristics for serial binary communication circuits.

RTB

Removable Terminal Block.

run mode

An executing mode during which the controller scans or executes the logic program.

rung

A rung contains input and output instructions. During Run mode, the inputs on a rung are evaluated to be true or false. If a path of true logic exists, the outputs are made true (energized). If all paths are false, the outputs are made false (de-energized).

save

To save a program to a computer hard disk.

scan

The scan is made up of four elements: input scan, program scan, output scan, and housekeeping.

scan time

The time required for the controller to complete one scan.

signal delay

For inputs, the response time required to transmit the circuit status from the field wiring to the digital logic. For outputs, the time required to transmit the circuit status from digital logic to the output wiring.

sinking

A term used to describe current flow between two devices. A sinking device provides a direct path to ground.

sinking/sourcing

Describes a current signal flow relationship between field input and output devices in a control system and their power supply. Sourcing I/O modules supply (or source) current to sinking field devices. Sinking I/O modules receive (or sink) current from sourcing field devices.

sourcing

A term used to describe current flow between two devices. A sourcing device or circuit provides power.

status

The condition of a circuit or system.

strobe message

A strobe message is a multicast transfer of data sent by the scanner that solicits a response from each slave device. The devices respond with their data.

surge current per point

The maximum amplitude and duration (pulse) of current allowed for a given period of time and temperature.

surge suppressor

A device used to absorb voltage transients created by energizing an inductive load to reduce electrical noise or to protect the output circuit. For example, an R-C network, MOV (metal oxide varistor) or diode.

terminal

A point on an I/O module that external devices, such as a push button or pilot light, are wired to.

throughput

The time between when an input turns on and a corresponding output turns on or off. Throughput consists of input delays, program scan, output delays, and overhead.

token

The logical right to initiate communication. In a multi-master network a single token is passed between initiators to make sure two nodes do not transmit at the same time.

true

The status of an instruction that provides a continuous logical path on a ladder rung.

upload

Data is transferred from the controller to a programming or storage device.

UVPROM

An Ultra-Violet light erasable Programmable Read Only Memory module used to back-up, store, or transfer SLC 500 programs. The SLC 5/01 and SLC 5/02 processor can only read from a UVPROM. An external PROM programmer is used to program (write to) the device.

voltage category

The nominal voltage used to describe the module.

watchdog timer

A timer that monitors a cyclical process and is cleared at the conclusion of each cycle. If the watchdog runs past its programmed time period, it causes a fault.

watts per point

The maximum heat dissipation that can occur in each field wiring point when energized.

write

To send data to another device. For example, the processor writes data to another device with a message write instruction.

Notes:

Numerics

1746-BAS module 183, 203
1746-C7 cable 108
1746-C9 cable 108
1746-P1 power supply
installing 104
replacing fuse 139
1746-P2 power supply
installing 104
replacing fuse 139
1746-P3 power supply
installing 104
replacing fuse 139
special considerations for grounding 64
1746-P4 power supply
installing 104
1747-AIC link coupler
connecting the communication cable 194
1747-BA, lithium battery 43, 133, 173
1747-KE module
as an RS-232 communication device 203
on the DH-485 network 183
1747-KFC15 module 236
1747-L511 processor 81, 176, 227, 263
1747-L514 processor 81, 176, 227, 263
1747-L524 processor 83, 176, 227, 263
1747-L531 processor 86, 176, 227, 263
1747-L532 processor 86, 176, 227, 263
1747-L533 processor 86, 176, 227, 263
1747-L541 processor 89, 176, 227, 263
1747-L542 processor 89, 176, 227, 263
1747-L543 processor 89, 176, 227, 263
1747-L551 processor 92, 176, 227, 263
1747-L552 processor 92, 176, 227, 263
1747-L553 processor 92, 176, 227, 263
1747-M1 EEPROM 42
1747-M13 44
1747-M2 EEPROM 42
1747-M5 adapter socket 42
1747-NET-DNI interface 265
1747-PIC interface 16, 40, 229, 265
1747-SCNR module 229, 236, 265
1747-SDN module 229, 233, 265
1747-UIC interface 16, 229
description 41, 185
example network 185
function on DH-485 183
Installation Instructions publication 183
1761-NET-AIC interface 40, 229, 265
1761-NET-DNI interface 234, 265
1770-KF3 module 183
1784-KTXD card 226
1784-PCMK card 16
1784-PKTX(D) module 16, 226
1785-KA5 module
on the data highway plus network 226
5/01 processors
general specifications 176
hardware features 81, 101
status indicators 82
troubleshooting 143
5/02 processor
general specifications 176
hardware features 83
installing 101
status indicators 84
troubleshooting 143
5/03 processors
active modem-control lines
CTS (Clear to Send) 210
DCD (Data Carrier Detect) 211
DSR (Data Set Ready) 210
DTR (Data Terminal Ready) 210
RTS (Request to Send) 210
general specifications 176
hardware features 86
installing 101
keyswitch 95
returning processor to initial factory conditions 161
status indicators 87
troubleshooting 149
5/04 processors
active modem-control lines
CTS (Clear to Send) 210
DCD (Data Carrier Detect) 211
DSR (Data Set Ready) 210
DTR (Data Terminal Ready) 210
RTS (Request to Send) 210
general specifications 176
hardware features 89
installing 101
keyswitch 95
returning processor to initial factory conditions 161
status indicators 90
troubleshooting 149
5/05 processors
Ethernet communication 237
general specifications 176
hardware features 92, 93
installing 101
keyswitch 95

returning processor to initial factory conditions 161
status indicators 93
troubleshooting 149

A

address 271
AIC+ Advanced Interface Converter 271
mounting dimensions 80
ambient temperature rating, processor specification 176
application 271
Article 70B of the NFPA 73
Article 70E of the NFPA 55
ASCII communication 210

B

BASIC programming language 203
batteries, lithium
Code of Federal Regulations, 49 CFR 173.22a 134
DOT-E7052 provision 134
shipping when depleted 134
storing and handling 133
transportation 134
battery
catalog number 173
installation
SLC 5/01 or SLC 5/02 processors 136
SLC 5/03 and later processors 137
Belden #9463 cable 224
Belden #9842 cable
on the DH-485 network 193
wire/terminal connections 195
bit 271
block diagrams 271
Boolean operators 272
BOOTP
configuring SLC 5/05 242-245
using the Rockwell Utility 244
branch 272

C

cable routes, planning 190
cables
1746-C7 108
1746-C9 108
Belden #9463 224
Belden #9842 194
replacement 169
certification
power supplies 177
channel 0
pinout 202
chassis
13-slot modular mounting dimensions 76
date shown on 66
installation 17, 75, 98
chassis interconnect cables, installation of 108
clock, real-time
SLC 5/03 processor 86
SLC 5/04 processors 89
SLC 5/05 processors 92
Common Power Source 68
communication protocols
ASCII 210
data highway plus 221
DF1 full-duplex 204
DF1 half-duplex 205
DF1 radio modem 207
DH-485 202, 221
Ethernet 237
communication scan 272
contact protection
diodes 50
RC network 50
surge suppressor 50
varistor 50
contacting Rockwell Automation for assistance 141
control networks
Allen-Bradley Remote I/O 231
ControlNet 236
DeviceNet 233
overview 231
remote I/O network 231
control profile 273
control program 272
controller
definition 273
features 81
installation 58
overhead 273
selecting 31
spacing 58
specifications 176
troubleshooting 141
ControlNet Messaging module 236
ControlNet network 236
1747-KFC15 module 236

1747-SCNR module 236
ControlNet scanner 236
counters
definition 273
CPU (central processing unit), definition 273
CTS (Clear to Send) 210

D

Data Highway Plus communication protocol
overview 221
typical configuration 226
using the SLC 5/04 processors 221
wiring the SLC 5/04 processors 224
data packets 204
data table 273
Data Table Access Module (DTAM)
monitoring with 41
mounting dimensions 79
DCD (Data Carrier Detect) 211
DCE (Data Communication Equipment) 210
DeviceNet interface 234, 265
DeviceNet network 233
1747-SDN module 233
1761-NET-DNI interface 234, 265
length 235
DeviceNet Scanner 233
DF1 full-duplex protocol 204
DF1 half-duplex protocol 205
DF1 protocol
full-duplex 204
half-duplex 205
modem overview 210
overview 204
DF1 Radio Modem protocol
channel 0 driver 207
SLC 5/03 processor feature 86
SLC 5/04 processor feature 89
SLC 5/05 processor feature 92
DH+ network
devices that use the 1784-KTXD card 226
DH-485 Interface Converters
1747-PIC interface 40
1747-UIC interface 41
DH-485 network
description 181
devices that use the 1746-BAS module 183
1747-KE module 183
1747-UIC interface 183
1770-KF3 module 183
example system configuration 187
grounding and terminating 196
initialization 182
installation 193
planning considerations 189
protocol 182
DH-485/RS-232 Interface Module user's manual 203
DHCP
configuring SLC 5/05 245
definition 272
DIN rail 273
discrete I/O modules 36
download 274
DSR (Data Set Ready) 210
DTAM Micro operator interface
mounting dimensions 79
DTAM Plus operator interface
monitoring with 41
mounting dimensions 79
DTE (Data Terminal Equipment) 210
DTE controlled answer 274
DTE, definition 274
DTR (Data Terminal Ready) 210
DTR dialing 274

E

EEPROM
1 K User Words 42
4 K User Words 42
64 K User Words 44
EEPROM burning options 44
embedded responses 204
EMC Directive 97
emergency controller shutdown 66
Emergency-Stop Switches 67
EMI 275
enclosures
environment 56
selecting 39
encoder
definition 275
end device 204
Environmental Protection Agency (EPA) 135
equipment needed for installation 16
errors

SLC 5/01 and SLC 5/02 processors 144
SLC 5/03, SLC 5/04, SLC 5/05 processors 150
while downloading an operating system 159
Ethernet
advanced functions 246
messaging 238
processor performance 238
using the SLC 5/05 processors 237
European Union Directives 28, 97
executing mode 275

F

false 275
features
SLC 5/01 processors 81
SLC 5/02 processor 83
SLC 5/03 processor 86
SLC 5/04 processors 89
SLC 5/05 processors 92
FIFO (First-In-First-Out) 275
file 275
full-duplex
(point-to-point) 205
fuses, for power supply
installation 139
troubleshooting tips 143

G

getting started quickly
overview 15
procedures 16
Required Tools and Equipment 16
ground bus 63
grounding guidelines
ground bus 61
overview 61
special considerations for DC applications using 1746-P3 64

H

half-duplex master protocol, A-B products that support 205
hard disk 276
hazardous environment
component installation 57
selecting hardware components 47
heat dissipation, calculating for SLC 500 control system 261
heat, preventing excessive 60
high byte 276
housekeeping 276
humidity, processor specification 176

I

I/O devices, recommendations for wiring
wires, bundle 115
I/O modules
discrete 36
specialty 36
wiring 116
IBM AT connector pin assignment 214
input modules
installing 102
maximum current 227
troubleshooting 163
watts 263
wiring 116
input scan 276
input states on power down 70
installation
chassis 17, 98
chassis interconnect cables 108
getting started quickly 15
inspecting 122
lithium battery on SLC 5/01 or SLC 5/02 processors 136
lithium battery on SLC 5/03, SLC 5/04, and SLC 5/05 processors 137
memory modules 103
modules 102
power supplies 104
processors 101
typical SLC system 55
instruction 277
instruction set
definition 277
interconnect cable installation 108
interface converter, 1747-PIC 40
isolated link coupler, 1747-AIC
dimensions 78
installing 193
isolation transformers
example calculation 46
power considerations 68
selecting 46

J

jumpers

J1 103
J4 159
power supply 105

K

keyswitch
clearing faults for the SLC 5/03, SLC 5/04, and SLC 5/05 processors 149
keyswitch location
SLC 5/03 processors 87
SLC 5/04 processors 90
SLC 5/05 processors 93
keyswitch positions for the SLC 5/03, SLC 5/04, and SLC 5/05 processors
PROG 95
REM 96
RUN 95

L

ladder logic 277
least significant bit (LSB) 277
LIFO (Last-In-First-Out) 277
line voltage variations, excessive 47
link coupler
mounting dimensions 78
lithium batteries
Code of Federal Regulations, 49 CFR 173.22a 134
disposal 135
DOT-E7052 provision 134
installing on SLC 5/01 or SLC 5/02 processors 136
installing on SLC 5/03, SLC 5/04, and SLC 5/05 processors 137
shipping when depleted 134
storing and handling 133
transportation 134
local I/O capacity, processor specification 176
logic 278
low byte 278

M

machine motion, preventing 122
maintenance, preventive 73
master control relay (MCR)
definition 278
using 66
master devices, DF1 half-duplex protocol 205
memory backup options, processor specification 176
memory modules
for SLC 5/01 and 5/02 processors 42
for SLC 5/03, SLC 5/04, and SLC 5/05 processors 43
installation 103
mnemonic 278
modem
definition 278
modems
for RS232 210
modes 278
modules, installation 102
motor starters (bulletin 509)
surge suppressors 49
motor starters (bulletin 709)
surge suppressors 49
mounting
chassis 98
mounting dimensions
10-slot chassis 76
13-slot chassis 77
4-slot chassis 75
7-slot chassis 76
AIC+ Advanced Interface Converter 80
Data Table Access Module 79
DeviceNet interface 80
DTAM Micro 79
DTAM Plus 79
Ethernet interface 80
link coupler 78
MSG instruction 204

N

National Fire Protection Association (NFPA) 55
negative logic 279
noise generators 47
noise immunity, processor specification 176
noise, excessive 47
normally closed 279
normally open 279

O

offline 280
offset 280

off-state leakage current 280
one shot 280
online 280
operator interface
selecting
DTAM 41
DTAM Plus 41
PanelView 550 41
personal computer 40
output contact protection, selecting 50
output modules
installing 102
maximum current 228
troubleshooting 165
watts 264
wiring 116
output scan 281
overview of the modular control system 29

P

PanelView 550 Operator Terminal
monitoring with 41
PC connector pin assignment 213
PCCC
definition 281
performance
Ethernet processor 238
personal computer, programming with 40
pinout, channel 0 202
planning considerations for a network 189
power considerations
common power source 68
input states on power down 70
line conditions, other types of 70
loss of power source 70
undervoltage operation 70
power source, loss of 69
power supplies
installing 18, 104
setting jumpers 105
power supply fuse
replacing 139
power supply loading worksheet 38, 230
power, removing 142
preparing your wiring layout 114
preventing excessive heat 60
preventive maintenance 73
processor
installation 21, 101
processor files 281
processor hardware features
SLC 5/01 81
SLC 5/02 83
SLC 5/03 86
SLC 5/04 89
SLC 5/05 92, 93
processor specifications
ambient temperature rating 176
humidity 176
LED indicators 176
local I/O capacity 176
maximum chassis/slots 176
memory back-up options 176
noise immunity 176
program memory 176
program scan holdup time after loss of power 176
remote I/O capacity 176
standard RAM 176
PROG, keyswitch position for the SLC 5/03 and SLC 5/04 processors 95, 173
program alteration 143
program file
definition 281
program memory, processor specification 176
program mode 281
program scan
definition 281
program scan hold-up time after loss of power 176
programmable controller grounding and wiring guidelines 63
programming device 282
pulses
transient 51

Q

quick start for experienced users 15

R

RAM, power back-up
SLC 5/01 or SLC 5/02 processors 136
SLC 5/03, SLC 5/04, and SLC 5/05 processors 137
RAM, processor specification 176
RC network 50

read 282
related documentation 14
relay 282
relay logic 282
relays, surge suppressors for 49
REM, keyswitch position for the SLC 5/03, SLC 5/04, and SLC 5/05 processors 96
remote I/O capacity, processor specification 176
remote I/O network 231
remote I/O passthru 232
removable terminal blocks (RTB) 119
installing 120
removing 119
using 119
removing power from the SLC 500 control system 142
replacement hardware
cables and connectors 169
other items 171
terminal blocks 171
replacing a fuse on the power supply 139
required tools and equipment 16
reserved bit 282
restore 282
retainer clips
replacement kit 172
replacing on modules 138
retentive data 282
RS-232 communication
connectors 211
DCE pinout 212
DF1 protocol 204
DTE pinout 211
SLC 500 devices that support 203
RS-232 connector pin assignments
1746-BAS module
to a modem 217
to DTE 217
1747-KE module
to a modem 216
to DTE 216
2760-RB module
to a modem 218
to DTE 218
IBM AT to an SLC 5/03 processor 214
PC to a modem 213
PLC-5 processor
to a modem 219
to DTE 219
SLC 5/03 processor
to a modem 214
to a PC (with cable 1747-CP3) 215
to DTE 215
RS-232 devices
1746-BAS module 203
1747-KE module 203
RS-232, definition 282
RTB 119
RTS (Request to Send) 210
run mode 283
RUN, keyswitch position for SLC 5/03, SLC 5/04, and SLC 5/05 processors 95
rung 283

S

safety considerations
disconnecting main power 72
master control relay circuits, periodic tests of 72
power distribution 72
safety circuits 72
save 283
SCADA applications 201
scan 283
scan time 283
selecting
contact protection 50
discrete I/O modules 36
enclosures 40
isolation transformers 46
memory modules for SLC 5/03, SLC 5/04, and SLC 5/05 processors 43
power supply 36
processors 31
SLC 5/01 and SLC 5/02 memory modules 42
speciality I/O modules 36
surge suppressors 48
sinking 111, 283
sinking and sourcing 111
contact output circuits 112
sinking device with sourcing input module circuit 113
sinking device with sourcing output module circuit 113
solidstate DC I/O circuits 112
sourcing device with sinking input module 112
sourcing device with sinking output module circuit 113

slave devices, DF1 half-duplex protocol 205
SLC 500 programmable controllers
general specifications 176
installing 101
selecting a memory module 42, 43
selecting a processor 31
selecting discrete I/O modules 36
selecting enclosures 40
selecting isloation transformers 46
selecting speciality I/O modules 36
special considerations 47
troubleshooting 141
SLC processor compatible cables 16
SLC processor compatible interfaces 16
sourcing 284
spacing your controllers 58
specialty I/O modules 36
specifications
processors
ambient temperature rating 176
clock/calendar accuracy 176
humidity 176
LED indicators 176
local I/O capacity 176
maximum chassis/slots 176
memory back-up options 176
noise immunity 176
program memory 176
program scan hold-up time after loss of power 176
remote I/O capacity 176
standard RAM 176
starting up your control system 121
disconnect motion-causing devices 122
enter and test your program 129
inspect your installation 122
test your inputs 125
test your outputs 126
start-up instructions 15
status 284
surge suppression circuits 50
surge suppressors
for motor starters 49
for relays 49
system configuration, example 187
system test
general specifications 175

T

terminal 284
testing
inputs 125
outputs 126
program 129
throughput 284
tools needed for installation 16
transistor output transient pulses 51
troubleshooting
input modules 163
output modules 165
SLC 5/01 processor 143
SLC 5/02 processors 143
SLC 5/03 processor 149
SLC 5/03 processors
errors while downloading an operating system 159
SLC 5/04 processors 149
SLC 5/05 processors 149
troubleshooting, tips for
program alteration 143
removing power 142
replacing fuses 143
true 284

U

Universal Serial Bus
see 1747-UIC interface
upload 285
USB
see 1747-UIC interface
using memory modules (EEPROM and UVPROM)
EEPROM burning options 44

V

varistor 50

W

wire types
Belden #9463 224
wire/terminal connections, for Belden #9842 cable 170, 195
wiring
I/O modules 116
wiring layout, preparing your 114

Rockwell Automation Support

Rockwell Automation provides technical information on the Web to assist you in using its products. At http://support.rockwellautomation.com, you can find technical manuals, a knowledge base of FAQs, technical and application notes, sample code and links to software service packs, and a MySupport feature that you can customize to make the best use of these tools.

For an additional level of technical phone support for installation, configuration, and troubleshooting, we offer TechConnect Support programs. For more information, contact your local distributor or Rockwell Automation representative, or visit http://support.rockwellautomation.com.

Installation Assistance

If you experience a problem with a hardware module within the first 24 hours of installation, please review the information that's contained in this manual. You can also contact a special Customer Support number for initial help in getting your module up and running.

United States	1.440.646.3434 Monday – Friday, 8am – 5pm EST
Outside United States	Please contact your local Rockwell Automation representative for any technical support issues.

New Product Satisfaction Return

Rockwell tests all of its products to ensure that they are fully operational when shipped from the manufacturing facility. However, if your product is not functioning, it may need to be returned.

United States	Contact your distributor. You must provide a Customer Support case number (see phone number above to obtain one) to your distributor in order to complete the return process.
Outside United States	Please contact your local Rockwell Automation representative for return procedure.

SLC 5/03, SLC, SLC 500, MicroLogix, PanelBuilder, Data Highway Plus, PanelView 300, PanelView 550, PanelView 1000, PanelView 300 Micro, PanelView 1400, DH+, MicroLogix, CompactLogix, FlexLogix, ControlLogix, DTAM, PLC-5, PLC-2, PLC-3, RSLogix 500, RSLogix 5000, RSLinx, WINtelligent, Allen-Bradley, TechConnect, and Rockwell Automation are trademarks of Rockwell Automation, Inc.

Trademarks not belonging to Rockwell Automation are property of their respective companies.

www.rockwellautomation.com

Power, Control and Information Solutions Headquarters

Americas: Rockwell Automation, 1201 South Second Street, Milwaukee, WI 53204-2496 USA, Tel: (1) 414.382.2000, Fax: (1) 414.382.4444
Europe/Middle East/Africa: Rockwell Automation, Vorstlaan/Boulevard du Souverain 36, 1170 Brussels, Belgium, Tel: (32) 2 663 0600, Fax: (32) 2 663 0640
Asia Pacific: Rockwell Automation, Level 14, Core F, Cyberport 3, 100 Cyberport Road, Hong Kong, Tel: (852) 2887 4788, Fax: (852) 2508 1846

Publication 1747-UM011G-EN-P - June 2008
Supersedes Publication 1747-UM011F-EN-P - May 2007
Copyright © 2008 Rockwell Automation, Inc. All rights reserved.