BNP-B3744*(ENG) VG)

MITSUBISHI CNC
MELDAS 500 SERIES

MAINTENANCE MANUAL (HARDWARE)

ADVANCED AND EVER ADVANCING
MITSUBISHI ELECTRIC

Preface

(1) The contents of this manual include the items required to maintenance the entire MELDAS 500 Series CNC unit, so the system configuration may differ according to the target model and specified configuration.
Use this manual with the Instruction Manual, instruction Manual issued by the machine maker, and other Instruction Manuals.

(2) This Manual is targeted for the general user and machine maker engineers. If there are any unclear points, please contact Mitsubishi.

(3) An effort has been made to match the contents of this manual with the NC unit. We ask for your understanding if there are any differences in the contents.

(4) Related material
MELDAS 500 Series Connection Manual

Contents

1. Outline 1
1.1 System Configuration 2
1.1.1 System configuration 2
1.1.2 Internal system diagram 3
1.2 Control Unit Configuration 4
1.2.1 Control unit configuration 4
1.2.2 Control section PCB configuration 5
1.3 Operation Board Configuration 6
1.4 Table of Configuration Units 7

2. Daily Maintenance and Periodic Inspection and Maintenance ... 10
2.1 Maintenance Instruments 10
2.2 Maintenance Items 10
2.3 Cleaning the Operation Board Escutcheon and CRT 11
2.4 Maintenance and Handling of the Floppy Disk Unit 12
2.4.1 Maintenance of the floppy disk unit 12
2.4.2 Handling of the floppy disk 12
2.4.3 Other precautions for handling 13
2.4.4 Troubleshooting 14
2.5 Battery Replacement 15

3. Troubie Diagnosis and Measures 16
3.1 Confirmation of State of Trouble Occurrence 16
3.2 Examples of Troubles and Troubleshooting 17
3.2.1 Examples of troubles 17
3.2.2 Examples of troubleshooting 18
3.3 LED List of Each PCB (unit) 23
3.4 Presumed Causes for Alarms 25
3.5 Procedure for Inspection of Each Trouble 37
3.6 Replacement of Various Units in Control Unit 39
3.6.1 Replacement of power unit 40
3.6.2 Replacement of cooling fan 40
3.6.3 Replacement of the QX card 40
3.6.4 Replacement of memory cassette card 42
3.6.5 Precautions during replacement 43

4. Installation Adjustment Procedure 44
4.1 Working Conditions 44
4.2 Input Power 44
4.3 External Connections 45
4.3.1 Connection of input power 45
4.3.2 Connection of motor 45
4.3.3 External connections 45
4.4 Installation Check List 47
4.5 Turning on the Power 48
4.5.1 Power on, ready on, emergency stop, ready off flow chart ... 48
4.6 Setting Capacity (hardware setting) 49

5. Explanation of Hardware 51
5.1 Outline 51
5.2 Flow of Signals 54
5.3 Control Unit Functions and Handling 57
5.3.1 Power supply 57
5.3.2 PCB functions and handling 58
5.4 Functions and Handling of the Operation Board 67
5.4.1 CRT 67
5.4.2 EL display 67
5.4.3 Color LCD 68
5.4.4 Floppy disk unit 68
5.4.5 Replacement of each module in operation board 69
5.4.6 PCB functions and handling 72
5.5 Functions and Handling of Manual Handle (HD60) 74
5.5.1 Functions 74
5.5.2 Replacement and handling 75

1. Outline

The MELDAS 500 Series CNC unit is a product that has thoroughly pursed high productivity and reliability. The following material has been prepared in addition to this Manual. Please refer to these together with this manual.

(1) MELDAS 500 Series Instruction Manual (per model)
(2) MELDAS 500 Series Connection Manual
(3) MELDAS 500 Series PLC Interface Manual

■ Features

(1) A high speed and high precision has been realized with the incorporation of a complete 32-bit microprocessor.
(2) A high reliabiiii has been realiied with the incorporation of high integrated parts such as the custom LSI.
(3) By fully digitaliiing the servo amplifier, a high maintainabilii, reliability and precision has been achieved.
(4) Systemization has been realized with the modulation and unitization of the product.

This manual commonly explains the maintenance, troubleshooting, installation adjustment and hardware for the following CNC units. However, the model name is listed for those units having limits in each section.

Model name	Slots	Automatic program	Display
M520	4	No	9" CRT
			EL
M530	4	No	9" CRT
			EL
			14" CRT
			Color LCD
M535		Yes	14' CRT
			Color LCD
M540	6	No	9" CRT
			EL
			14" CRT
			Color LCD
(M545)		Yes	14' CRT
			Color LCD

1.1 System Configuration

1.1.1 System configuration

The following units are generally used to compose the system using the MELDAS 500 Series.

(1) Control unit : This unit has the computation processing functions for numerical control. (This is also called the NC unit.)
(2) Operation board (display operation section)- : This unit has the setting and display functions.
(3) Servo/spindle control unit : This is a servo/spindle amplifier composed of a conductor for obtaining DC from AC and an inverter for obtaining AC from DC.
(4) Servo/spindle motor : Thii drive motor moves the machine.
(5) Position/speed detector : This sensor outputs a pulse that corresponds to the machine movement amount
(6) Other peripheral equipment: Peripheral equipment such as external memory and programming support.

This manual explains the sections enclosed with a dotted line in Fig. 1 .1 .

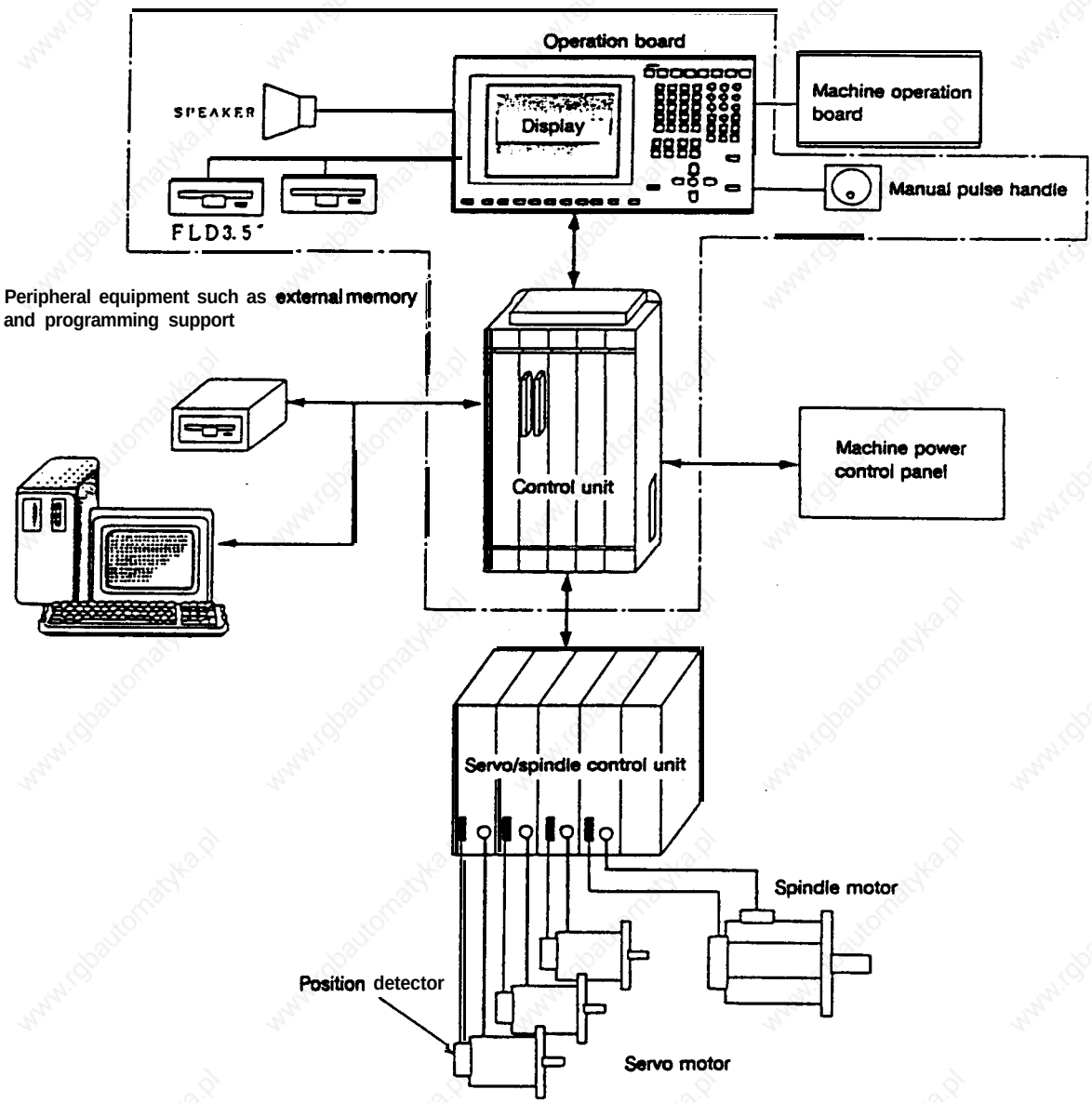

Fig. 1.1 General configuration of system using M500 Series

1.1.2 Internal system diagram

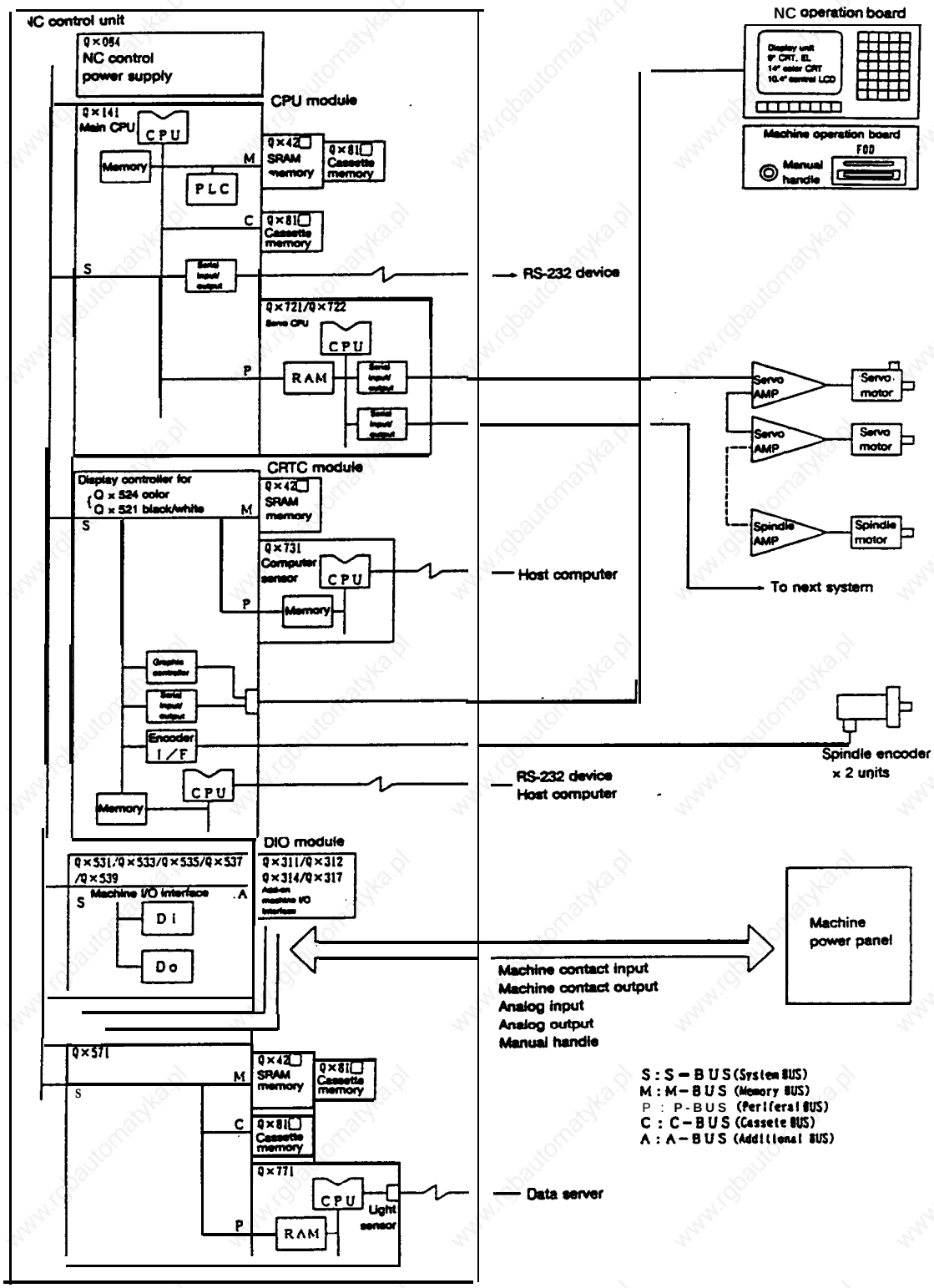

(Note) The above diagram shows the most general configuration, and the actually mounted hardware configuration may differ according to hardware flexibility and specifications.

1.2 Control Unit Configuration

1.2.1 Control unit configuration

The control unit is composed of baskets (4/6 slots) and the control power and control modules (integrated control section PCB) that are assembled into the baskets. The back panel into which the control power and control modules are mounted is on the back of the basket, and the cooling fan is mounted on the top. The cooling fan is mounted inside the fan cover as shown in Fig. A, and can be replaced easily be removing the fan cover from the basket unit. The control power is mounted on the far left slot of the basket, the CPU module'in slot 1, the CRTC model in slot 2. and the number of DIO modules required from the system are mounted from the far right slot. Optional expansion modules are mounted from the left into the empty slots.

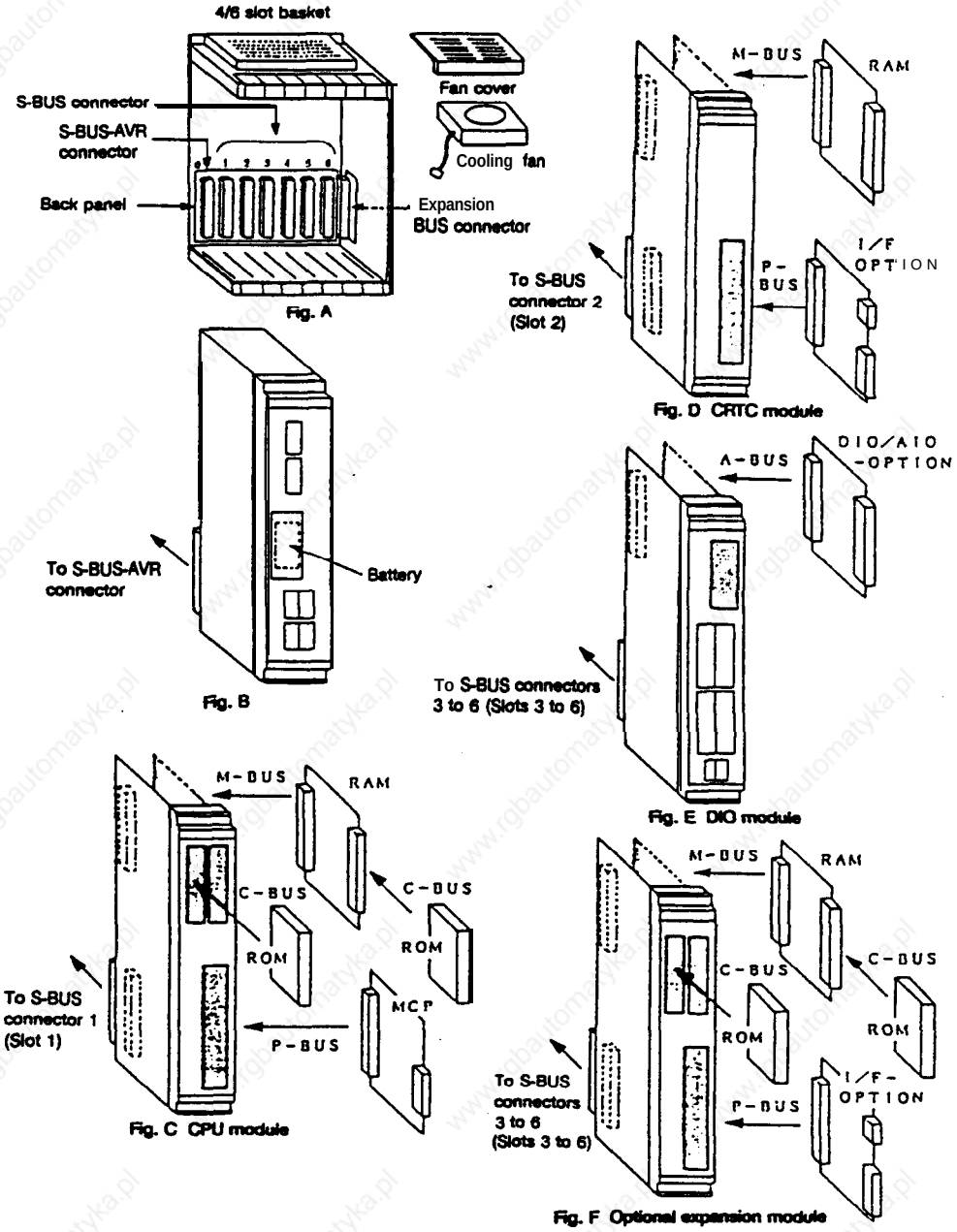

Fig. 1.2.1 Control unit configuration diagram

1.2.2 Control section PCB configuration

The control section PCB uses a control module to which various PCBs are mounted horizontally onto a 300 x 140mm standard size PCB as shown in Figs. C to E shown in Fig. 1.2.1 Control unit configuration diagram.
A system BUS connector that is connected to the back panel is mounted on the lower back of the control module and an interface connector and LED indicator are mounted on the front. A plastic front panel is mounted over this.
Fig. 1.22 shows the state from the front and side when the control module's front panel is removed. Fig. 1.22 shows the CPU module, and the M-BUS PCB, P-BUS PCB are mounted on the 300 x 140mm standard PCB (S-BUS PCB) so that the part mounting face faces the S-BUS PCB. Cassette memory can be mounted freely onto the front surface of the S-BUS PCB and M-BUS PCB.
This is possible with other control modules if the various add-on PCBs listed above are mounted. In some PCBs, this is not possible due to limits in the configuration, however, the ideology is the same.

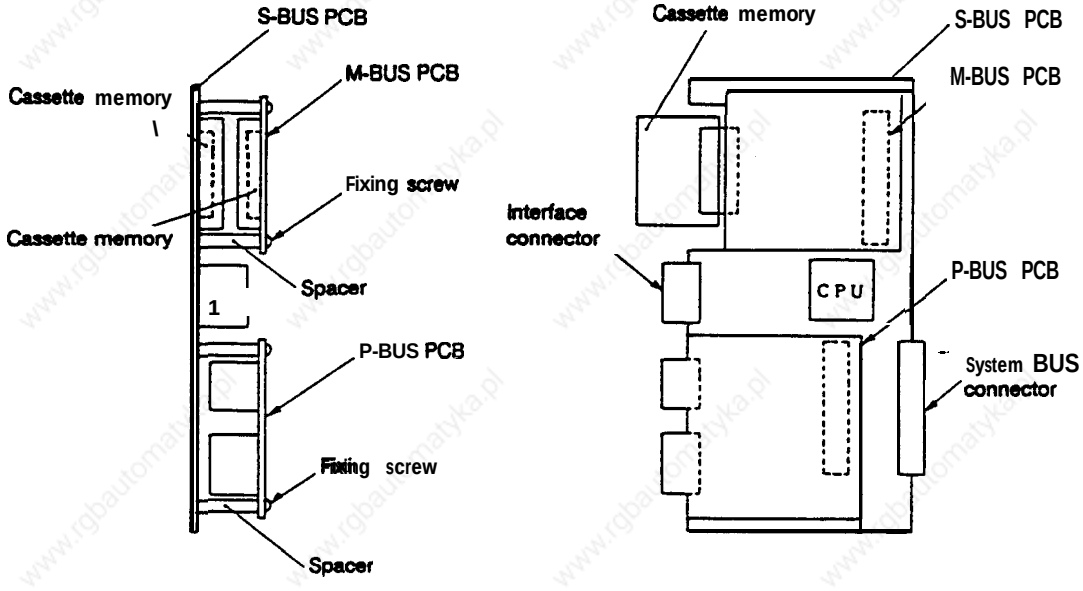

Fig. 1.22 Example of control module (integrated PCB)

1.3 Operation Board Configuration

An example of the operation board configuration is shown in Fig. 1.3.

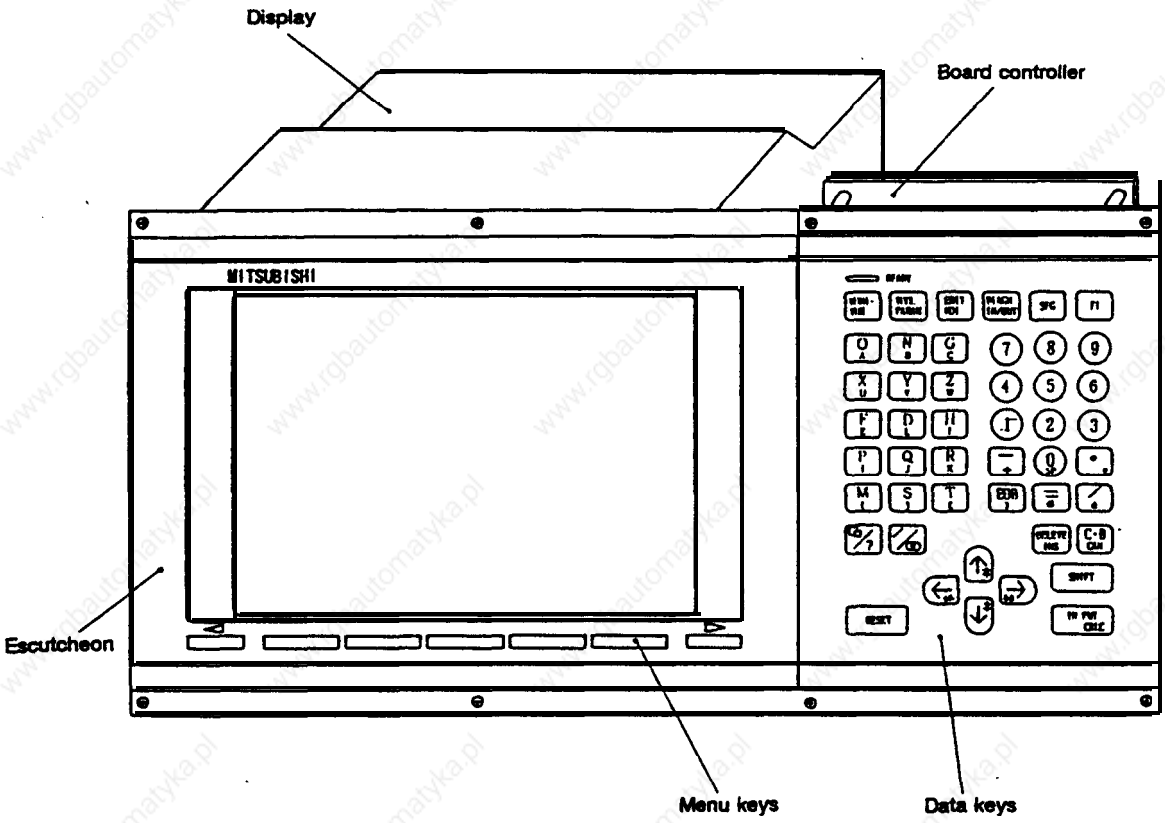

Fig. 1.3 Operation board configuration

1.4 Table of Configuration Units

(1) Control unit

No.	Model name		Function	Remarks
	Model name	Configuration element name		
1	4MU401A		4-slot control unit	
		QX041	4-slot back panel	
		QX084	Control power supply	
2	4MU601A		6-slot control unit	
		QX061	6-slot back panel	
		QX084	Control power supply	
3	Expansion unit		2-slot expansion control unit	
		QX025	2-slot expansion back panel	

(2) Control section printed circuit boards **(PCB)**

No.	Model name		Mounting position						Function	Remarks
	Model name	Configuration element name	S	M	P	A	C	C'		
1	CPU module									CPU, memory, servo I/F
		QX141	O						Main CPU (with floating point processing)	
		QX141-1	O						Main CPU (without floating point processing)	
		QX42□		O					SRAM memory	□ Difference according to capacity
		QX81□ #1					O		Main memory	□ Difference according to capacity
		QX81□ #2						O	User PLC memory	□ Difference according to capacity
		QX72□			O				Servo CPU	QX721(Skip×4), QX722(Skip×8)
2	CRTC module									I/F with display unit, large capacity memory, other functions
		QX524	O						For color CRT, color LCD	
		QX521	O						For 9" CRT, EL	
		QX42□		O					Large capacity memory	
		QX721			O				Servo CPU for additional axes	
		QX731			O				Computer link	
		QX738			O				M-NET	
3	DIO module									Machine I/O intetfaos
		QX631	O						HONDA connector type (VDE)	nput: 64. Output: 46
		QX533	O						HONDA connector type (O.C.)	nput: 64. Output: 46
		QX535	O						Rat connector type (VDE)	nput: 60, Output: 80
		QX537	O						flat connector type (O.C.)	nput: 60, Output: 80
		QX539	O						HONDA connector type (Special)	Mounting of add-on PCB not possible
		QX311				O			DO (VDE)	Output: 16
		QX312				O			DO (O.C.)	Output: 16
		QX314				O			Encoder I/F, analog output	Encoder input: 2, analog output: 2
		QX317				O			Analog input, analog output	Analog input: 4, analog output: 2
4	Module with special memory									Automatic program
		QX571	O						Base (no functions)	
		QX42□		O					Custom release RAM	
		QX81□ #1					O		Custom release memory	
		QX81□ #2						O		
		QX771			O				Data server I/F	
5	Special servo I/F	QX154	O						Analog servo I/F	Mounting of add-on PCB not possible
7	Special PCB	QX734			O				Ethernet	For software development
		QX791			O				Floppy disk I/F	For software development
		QX826					O		RAM board for QX816	For software development

(3) Operation board

No.	Model name		Function	Remarks
	Model name	Configuration element name		
1	4MB411		14' CRT standard	
		AI QA8DSP40	14' CRT unit	
		KS-4MB401	Menu keys	
		KS-4MB411	Data keys	
		QY201	Board controller	
		MC231	Board contact input/output	
		QY271	Audio output I/F	
2	4MB911		9" CRT standard (machining center system)	
		MDT-962B-1 A	9" CRT	
		KS-4MB901	Menu keys	
		KS-4MB911	Data keys	
		QY201	Board controller	
		MC231	Board contact input/output	
		QY271	Audio output I/F	
3	4MB913		9" CRT standard (lathe system)	
		MDT-9628-I A	9' CRT	
		KS-4MB901	Menu keys	
		KS-4MB913	Data keys	
		QY201	Board controller	
		MC231	Board contact input/output	
		QY271	Audio output I/F	
4	4MB531 4MB532		EL standard, separated (machining center system)	
		LJ640U48	9.4' EL	
		KS-4MB501	Menu keys	
		KS-4MB911	Data keys	
		QY201	Board controller	
		MC231	Board contact input/output	
		QY271	Audio output I/F	
5	4MB531 4MB533		EL standard, separated (lathe system)	
		LJ640U48	9.4' EL	
		KS-4MB501	Menu keys	
		KS-4MB913	Data keys	
		QY201	Board controller	
		MC231	Board contact input/output	
		QY271	Audio output I/F	
6	4MB211		10.4' LCD standard (horizontal)	
		10.5' LCD	10.4' LCD	
		KS-4MB201	Menu keys	
		KS-4MB211	Data keys	
		QY201	Board controller	
		MC231	Board contact input/output	
		QY271	Audio output I/F	
7	4MB221		10.4' LCD standard (vertical)	
		10.5' LCD	10.4' LCD	
		KS-4MB201	Menu keys	
		KS-4MB221	Data keys	
		QY201	Board controller	
		MC231	Board contact input/output	
		QY271	Audio output I/F	
8	4FD01		Floppy disk unit	Floppy disk unit w/one buiit-in drive
9	4FD02		Floppy disk unit	Floppy disk unit w/two built-in drives

2. Daily Maintenance and Periodic Inspection and Maintenance

2.1 Maintenance Instruments

(1) Measurement instruments

The following instruments are used for measurement to confirm that the power is being properly supplied to the NC unit and that the wiring to the NC unit is correct, and during simple troubleshooting.

Table 2.1 Maintenance instruments

Instrument	Conditions	Application
Tester		Check that the wiring to the NC unit is correct before turning on the power.
AC voltmeter	The AC power voltage is measured. The tolerable difference is ±2% or less.	The AC power votage supplied to the NC unit is measured.
DC voltmeter	Maximum scale 10V 30V tolerable difference is ±2% or less.	The DC power voltage is measured. External supply 24V (I/O interface DIO-A) Battery voltage QX084 DC output
Phase rotation meter		Check the order of AC 3-phase input power connection
Oscilloscope		For general measurement and simple troubleshooting

(Note 1) Currently, a high precision digital muitimeter has been generally diffused as a tester, and is most commonly used. This digital multimeter can also be used for the AC voltmeter and DC voltmeter.

(Note 2) A logic analyzer (200MHz or higher) is required for complicated troubleshooting.

(2) Tools

Screwdriver (large, medium, small)

2.2 Maintenance Items

Maintenance is divided into daily, periodic inspection and maintenance (items not performed daily but as designated), and periodic maintenance replacement (replacement of parts whose life is up).

Table 2.2 List of maintenance items

Class	Name	Life	Inspection/ replacement	Remarks
Daily maintenance	Cleaning of escutcheon and CRT		Daily	Refer to the section 'Cleaning the operation board escutcheon and CRT".
Periodic inspection and maintenance	Cleaning of floppy disk unit (operation board built-in type)		Once/two months	Refer to the section 'Maintenance and handling of the floppy disk unit".

Class	Name	Life	Inspection/ replacement	Remarks
Periodic inspection and maintenance	Replacement of floppy disk sheet (operation board built-in type)	3 x 10s path/track		Refer to the section 'Maintenance and handling of me floppy disk unit' and replace the floppy disk sheet.
	Replacement of floppy disk drive (operation board built-in type)	12,000 hours of aooess or after 5 years of FDD motor rotation. Which ever is first.	Refer to left	Refer to 'Replacement of each module in operation board".
	CRT	7,000 hours (Regulated by conductivity time for brightness to drop below 80%.)	Fbplace when screen darkens.	Note, that the brightness can be adjusted by the user.
	EL display unit	30,000 hours (Regulated by oonduotivity time for brightness to drop below 70%.)	Replace when screen darkens.	The brightness can be adjusted by the user.
	Color LCD display unit	10.000 hours (backlight life)	Replace when screen darkens.	
	Battery (Li battery)	Data saving time: 7 years (discharge time 2,000 days) The life of the battery itself is 7 years at 60°C (8.5 years at 40°C).	After 7 years	The data hold time is calculated by the discharge time/year Max. 6,840 hours (average 240 days x 16 + holidays 125 days x 24) Refer to 'Battery replacement" for the replacement method.
	Cooling fan (control unit)	30,000 hours	Refer to left	Refer to 3.6.2 Replacement of cooling fan'.
Other consumable parts	Keyboard	10^6 punches	Refer to left	

2.3 Cleaning the Operation Board Escutcheon and CRT

(1) Remove the escutcheon with the same method as for replacing each operation board module explained in section 54.5.
(2) Using a neutral detergent, etc. and soft cloth, wipe the escutcheon and CRT clean.

2.4 Maintenance and Handling of the Floppy Disk Unit

2.4.1 Maintenance of the floppy disk unit

Magnetic powder and dust will adhere onto the surface of the floppy disk drive head over a long time, and may not allow read out to be performed properly.
Clean the head about once every two months with the following procedure.

(1) Recommended cleaning disk
Maker : Japan Memorex
Model : Memorex Cleaning Floppy 3.5 inch double sided
Method : Dry

(2) Cleaning method
(a) insert the cleaning disk into the floppy disk drive in the floppy disk unit to be cleaned.
(b) Select the disk input/output screen from the 'Data Input/Output' function on the display screen and display the directory.
(c) Cleaning is completed when the message 'DISK ERROR' appears on the display screen.
(d) Eject the cleaning disk.

(Note) 1. The cleaning disk can be used 60 times. Replace the cleaning disk with a new one when the disk has been used 60 times.

2.4.2 Handling of the floppy disk

Observe the following points to use the floppy disk for a long time.

1. Precautions for handling

① Never touch the magnetic surface.
Read out will not be possible if fingerprints get on the magnetic surface.

② Do not touch the floppy disk with oily or powder coated hands.

③ Do not place the floppy disk near tobacco smoke or solvents.

@When sticking on an index label, make sure that it is in the correct direction and that it will not peel off. Do not overlay labels.

⑤ Fill in the index label before sticking it on. Use a soft-tipped pen, such as a felt pen when writing on a label that has already been stuck on the disk.

@Gradually insert the disk in the correct direction into the drive. Rough insertion and ejection will damage the disk.

⑦ When moving the disk between rooms with great differences in temperature and humidity, always wait at least 30 minutes before using the disk.

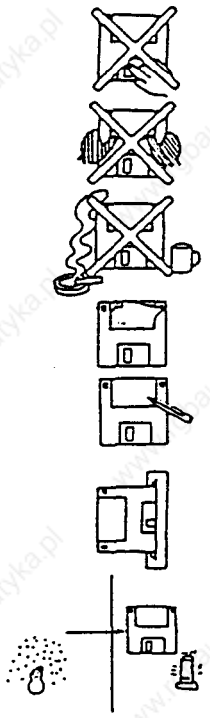

2 Precautions for storage

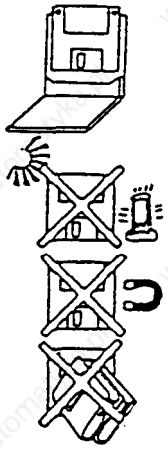

① When not using the floppy disk or when storing back up disks, always place them in a plastic case.

② Do not store the disks where they will be subject to direct sunlight or near heating appliances.

③ Do not place the disks near magnets or magnetic fields. Magnetic rings and necklaces may also erase the data on the disk, so avoid handling the disks near these types of items.

④ Do not place objects on the disks.

24.3 Other precautions for handling

1. Floppy disk life

The life of the floppy disk is either five years of the FDD motor rotation or 12000 hours. The durability is ensured for the shorter of these two times. However, when using the unit in a dirty environment, reading out of the data may not be possible if dirt or other matters adhere onto the head.

Always perform the periodic head cleaning (refer to section 23.1) to prevent this type of trouble.

2 Recommendation for backups

Copy the floppy disks to store important data so that data will not be lost due to unforeseen accidents such as scratches or destroyed data

3. Working conditions

The floppy disk unit and floppy disks are very sensitive to changes in temperature and humidii. In regard to temperature, the data track and head's relative position will deviate and proper readout of the data may not be possible if the conditions are not satisfied (start up in below freezing conditions).

Always wait for the internal temperature to rise before starting.

4. Writing to floppy disks

Data must be written into the floppy disks at a temperature between 10°C and 40°C. Always observe the temperature conditions when writing data into the disk.

24.4 Troubleshooting

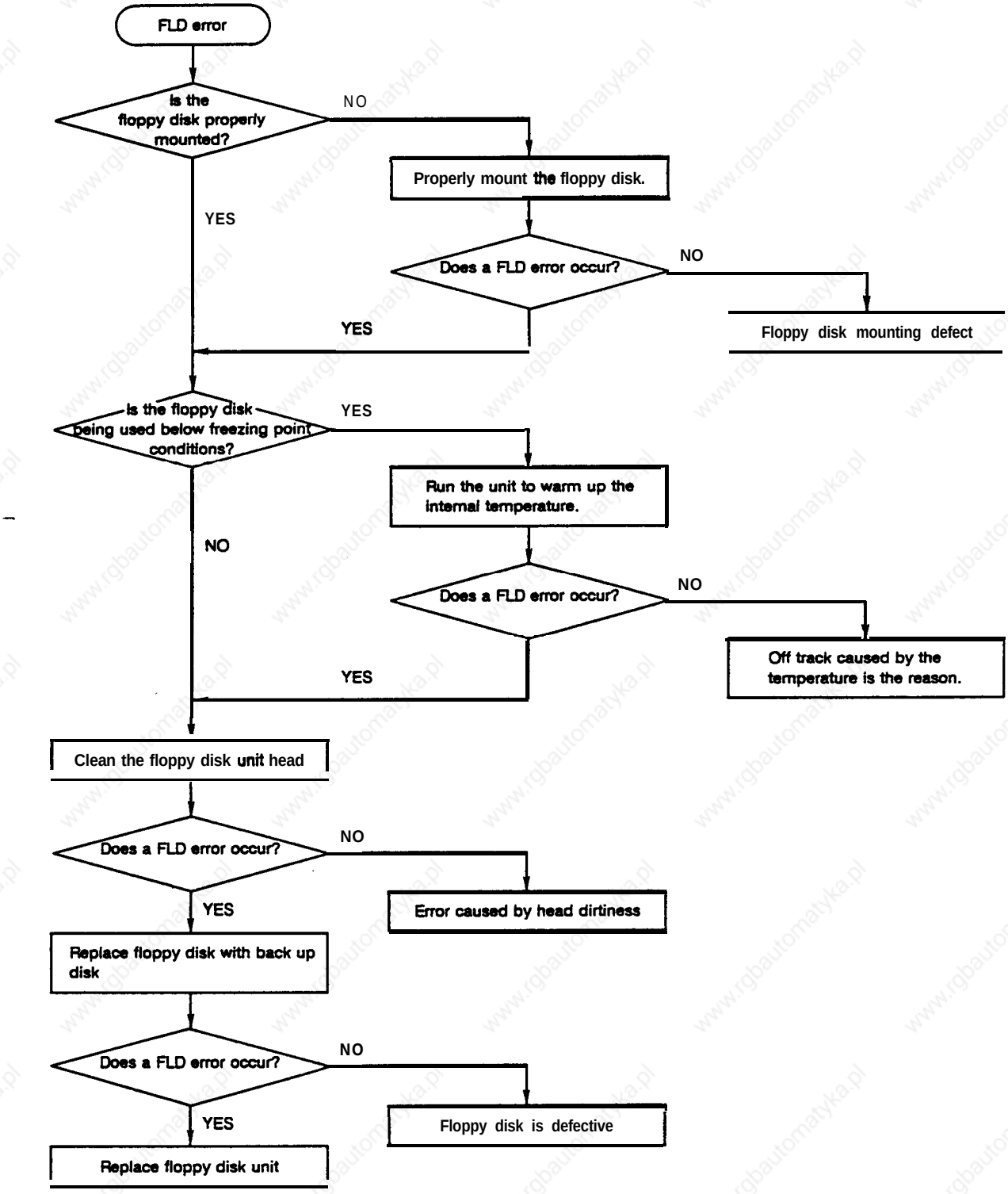

2.5 Battery Replacement

Data that must be backed up such as the parameters and machining programs, etc., are saved by the lithium battery mounted in the front panel on the front of the control power supply when the power is turned OFF.

Battery used	:	BR-CC7P with connector (Matsushita Denchi Kogyo with Mitsubishi specifications)
Battery voltage	:	3.0V
Alarm voltage	:	2.6V
Battery capacity	:	5.000mAH
Battery back up time	:	7 years
Battery life		7 years
Discharge current	:	100μA or less

The battery must be replaced before the life is up to ensure proper operation of the system.
(If the battery alarm is displayed, the internal data may be destroyed.)

Replacement procedure

The machine (NC) power may be ON or OFF.

(1) Remove the battery cover on the front panel of the control power supply.
(2) Disconnect the connector on the battery.
(3) Replace the battery and connect the connector.
(4) Replace the battery cover

1 If the power is turned OFF, complete this procedure within 30 minutes.

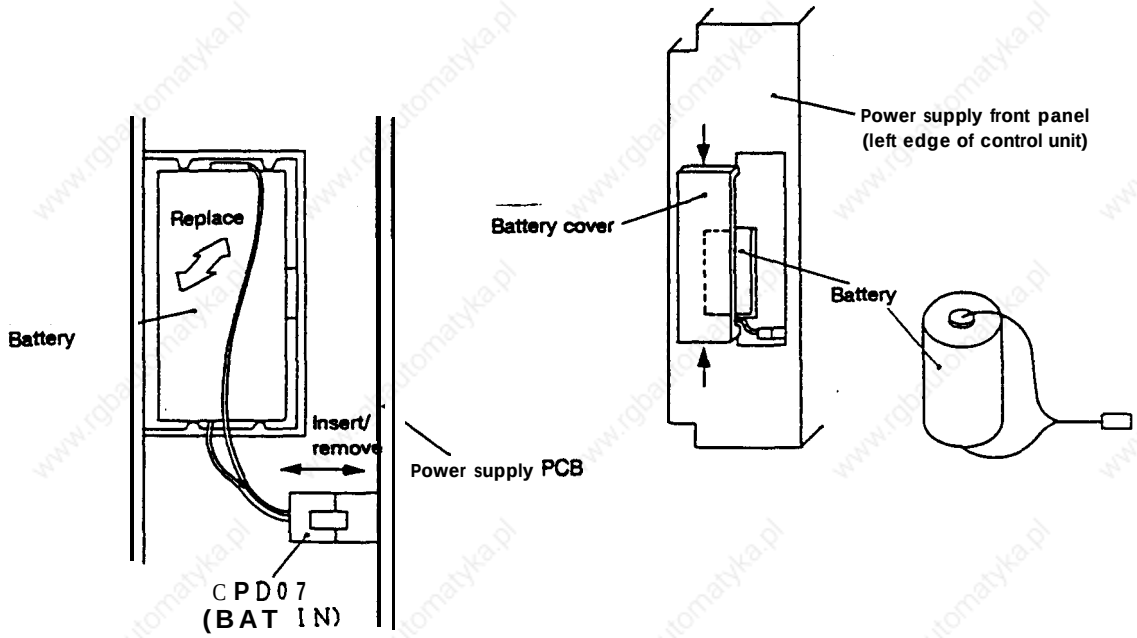

State with battery cover removed (enlarged view)

3. Trouble Diagnosis and Measures

If any trouble occurs during operation, it is necessary to accurately find the cause so that appropriate measures can be taken. Perform the following check to find the cause.

3.1 Confirmation of State of Trouble Occurrence

Confirm 'when', 'what was done' and 'what kind of trouble' has occurred.

(1) When did the trouble occur?
The time that the trouble occurred.

(2) What was done?
What mode was the NC operating in?

- During automatic operation: Program No., sequence No., and program details of when the trouble occurred.
- During manual operation : What was the manual operation mode?
  What was the procedure?
  What were the last and next steps?
- What is on the setting and display unit screen?
- Was data being input or output?
- What was the machine side state?
- Were tools being exchanged?
- Has hunting occurred in the control axis?

(3) What kind of trouble occurred?

- What alarm is being displayed on the alarm diagnosis screen in the setting and display unit?
  Display the alarm diagnosis screen and confirm the displayed details.
- What is displayed on the drive amplifier's status display?
  Look at the display of the drive amplifier's status and confirm the alarm details.
- What is displayed for the machine sequence alarm?
- Is the CRT screen normal?

(4) How frequently does the trouble occur?

- When did the trouble occur? How frequently? (During operation of other machines?) If the trouble occurs infrequently, the power voltage may be incorrect, or noise may be the cause. Check that the power voltage is correct (does the power voltage drop instantaneously when other machines are operated), and confirm that measures against noise have been taken.
- Did the trouble occur in a specific mode?
- Did the trouble occur when the ceiling crane was operated?
- What is the frequency of occurrence in the same workpiece.
- Repeat the operation to see if the same trouble occurs during the same step.
- Confirm whether the same trouble occurs when the conditions are changed.
  (Try changing the override, program contents, and operation steps, etc.)
- What is the ambient temperature?
  (Was there a sudden change in temperature? Is the fan on the top of the control unit rotating?)
- Are there any defective cable contacts or defective insulation?
  (Has oil or cutting fluids splattered on the cables?)

3.2 Examples of Troubles and Troubleshooting

3.2.1 Examples of trouble

(1) The NC power does not turn on.

- Is the power being supplied to the NC unit?
- Is the power supply section fuse blown?

(2) The unit does not operate even when started up.

- Is the correct mode selected?
- Is the tape correctly mounted during tape operation?
- Are the starting conditions correct?

  (In some machines, the start up will be locked unless specific conditions are satisfied. Confirm the conditions with the 'Instruction Manual' issued by the machine maker.)
- Is the override or manual speed setting O?
- Is the reset signal input?
- Is the feed hold signal input?
- Is the machine lock on?

3.22 Examples of troubleshooting

Power supply related troubleshooting

① The NC power does not turn on.

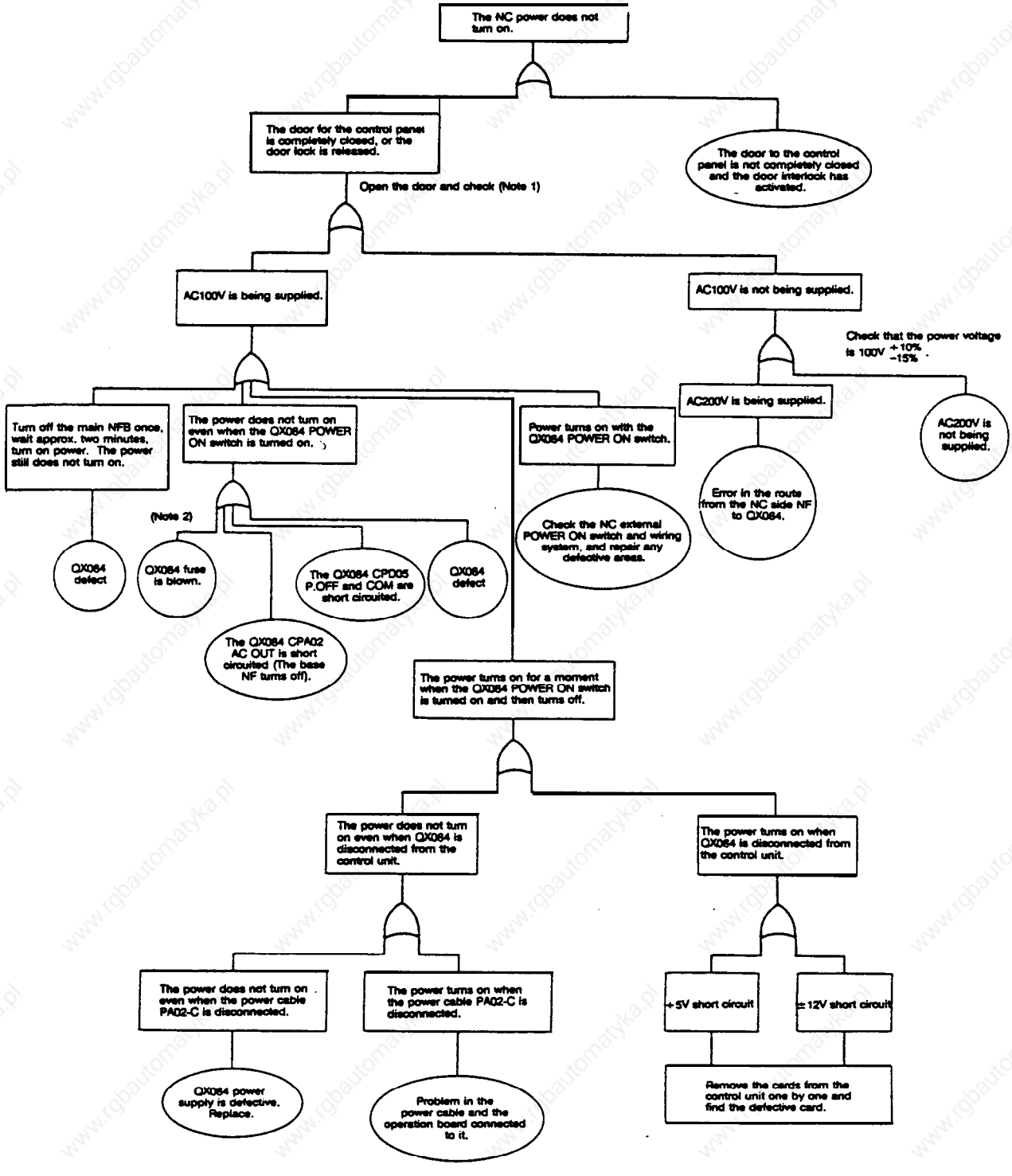

(Note 1) When the NC body door is opened, the door interlock limit switch will turn off. Turn the door interlock switch off with the door interlock key and then open the door. Always return the door interlock switch to ON after removing the trouble, and then close the door.

(Note 2) Refer to section 5.3.1 for details on blown fuses.

② AC FAIL (red) on QX084 lights.

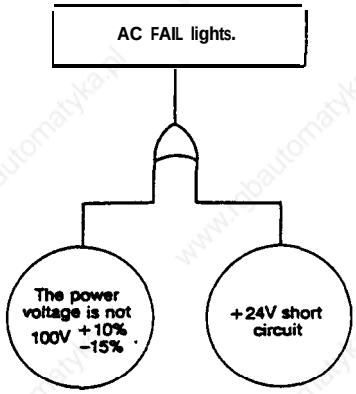

(Note) When the QXO84 24V output is being used for the I/O interface DIO-A, the machine output signal may be short circuited due to mis-wiring, etc.
in the above case, the IC in the I/O interface DIO-A card may be destroyed.

Troubleshooting in operation preparation stage

① Operation preparation (READY) cannot be entered.

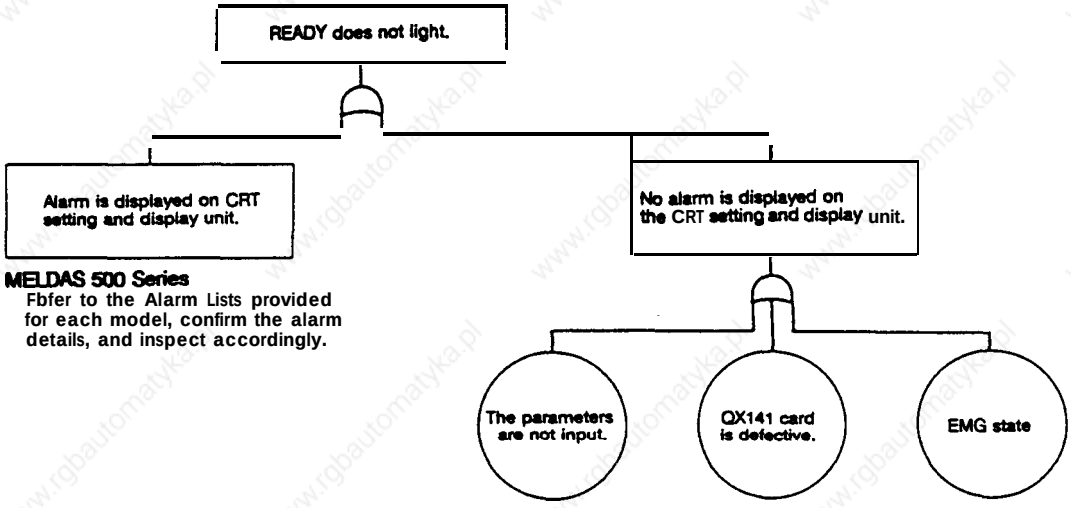

Operation board redated troubleshooting

① The operation keyboard cannot be operated.

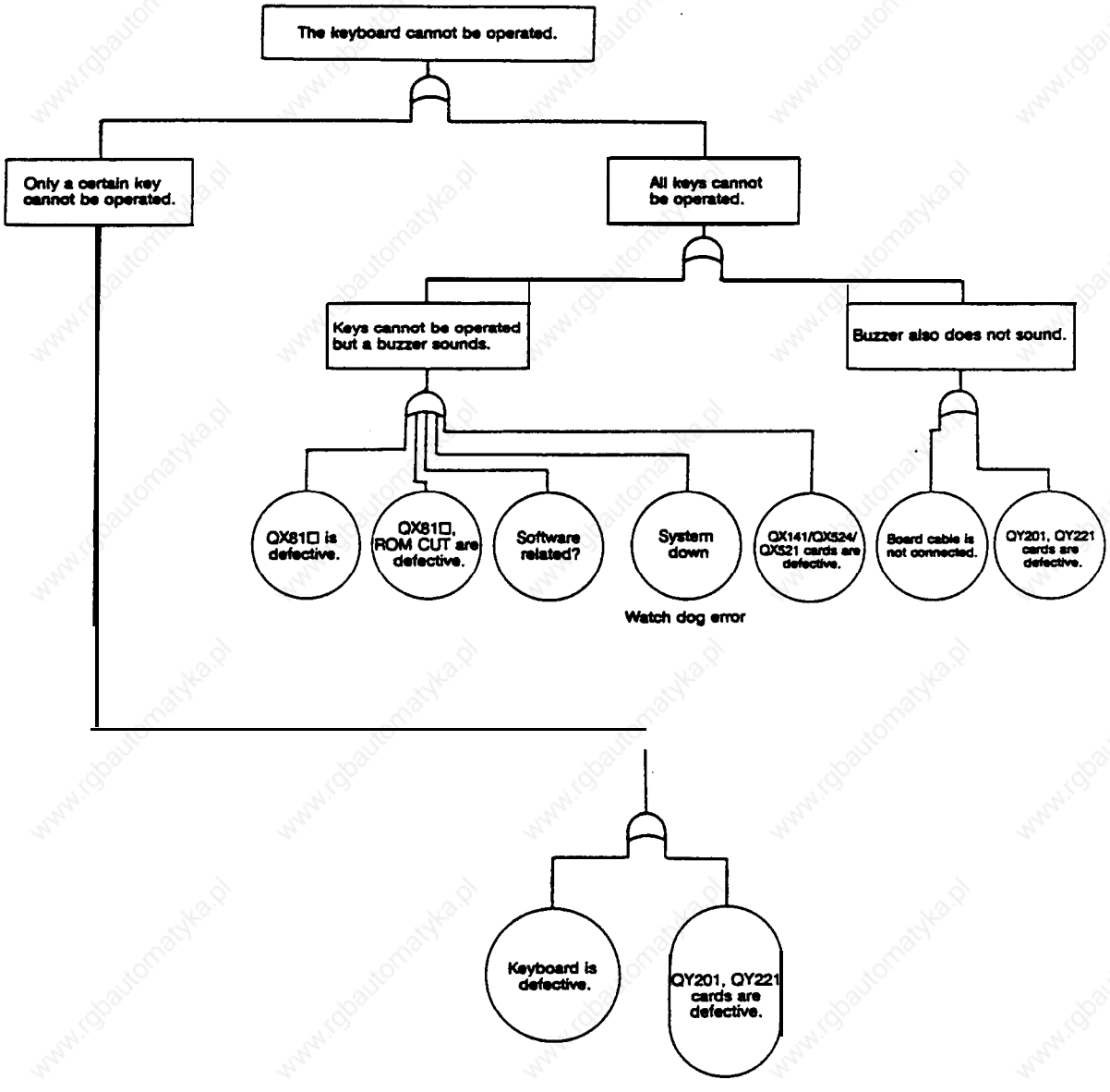

CRT and EL display troubleshooting

① Screen does not appear.

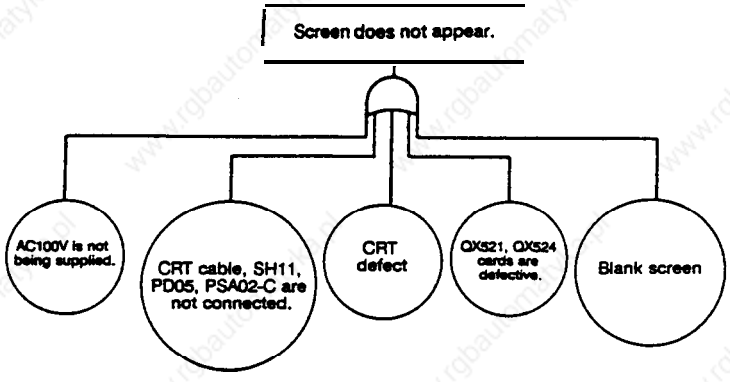

② Screen flows.

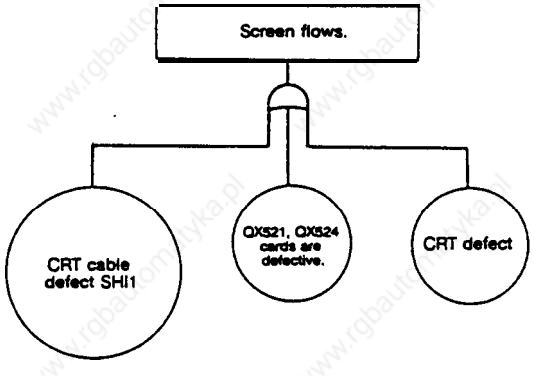

③ 'Dots' remain on screen.

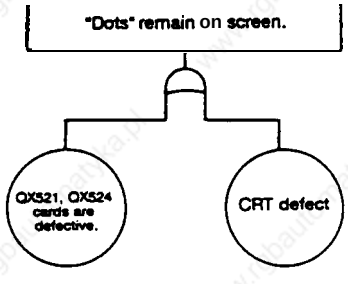

④ CRT screen sways (is distorted).

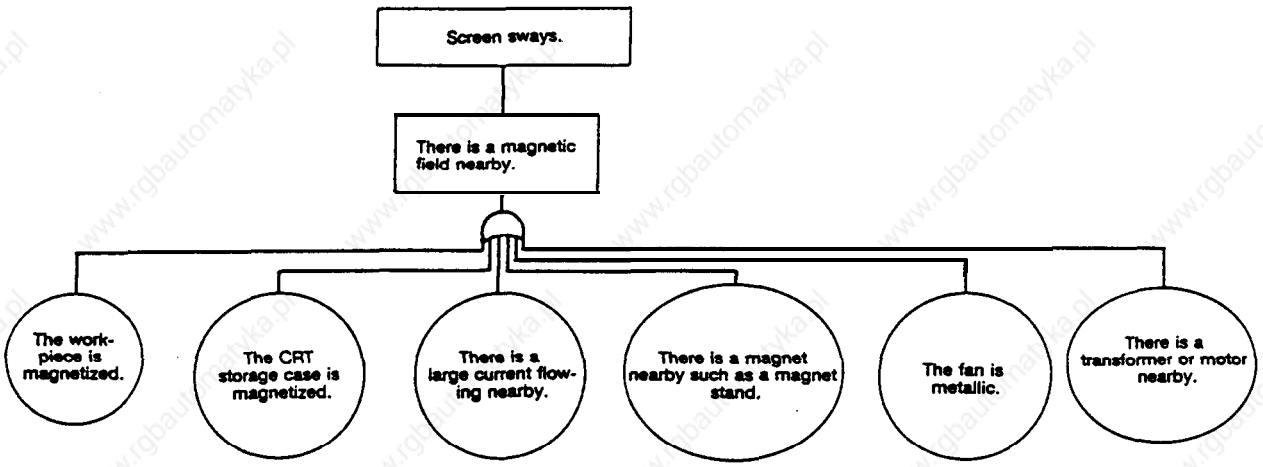

⑤ The screen changes on its own.

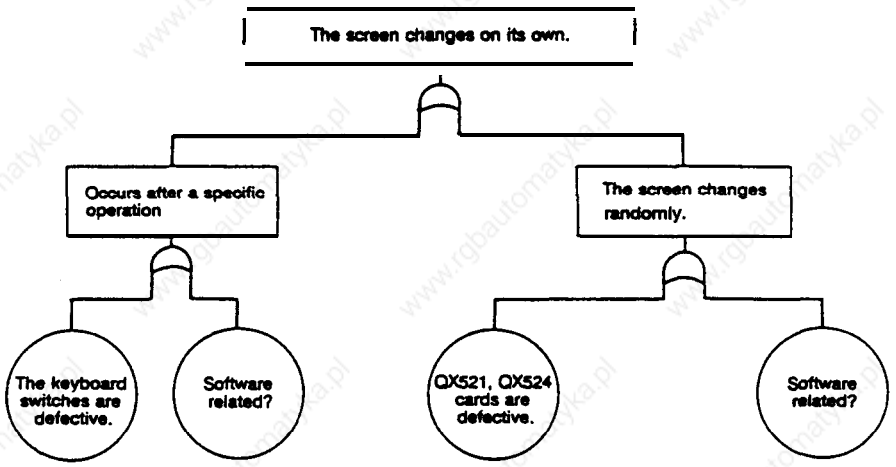

3.3 LED List of Each PCB (Unit)

Fig. 3.3. shows the conventional hardware configuration (max. configuration) of a normal system. Refer to section 63.2 'PCB functions and handling' for details on PCBs not listed here.

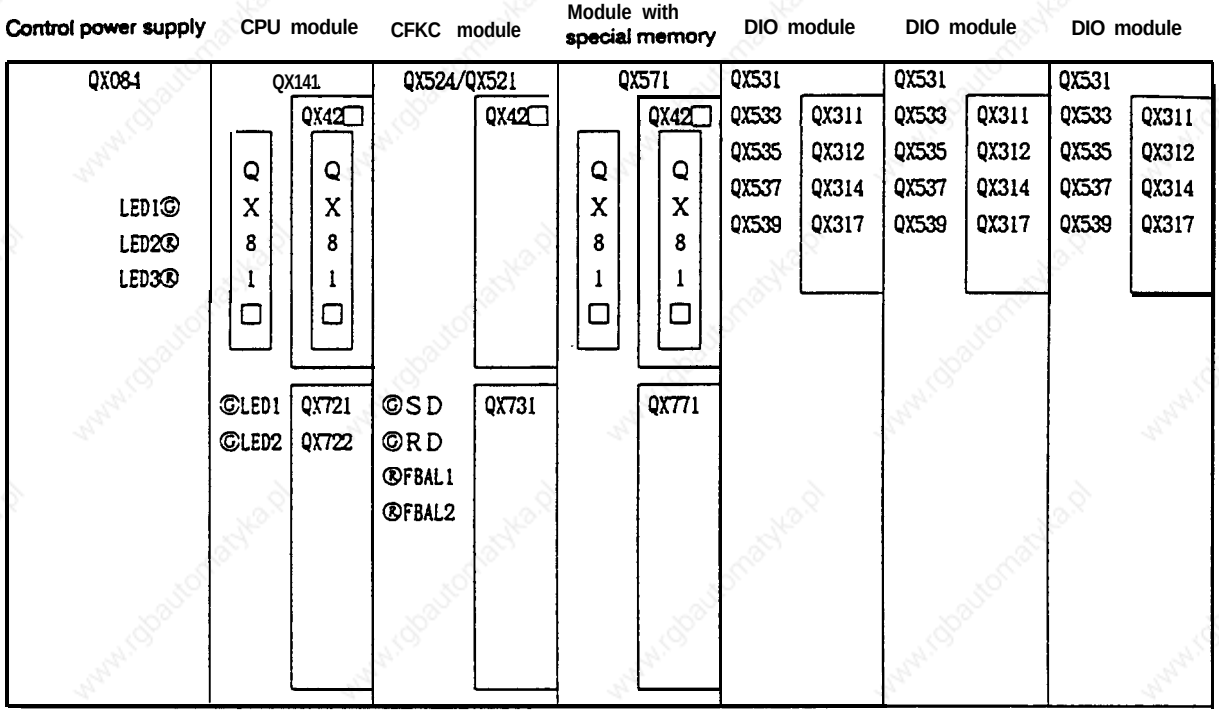

Fig. 3.3 Conventional hardware configuration (max. configuration)

Table 3.3 shows a list of LEDs. Some of the PCBs not listed here do have LEDs, so refer to section 5.3.2 'PCB functions and handling' for details.

Table 3.3 LED list

Card name	LED name	State		Details of display	Measures during error
		Normal	Error		
Control power supply QX084	LED1 (Green) (POWER)	Lit	Not lit	Control power ON	Refer to '(1) The NC power does not turn on".
	LED2 (Red) (AC FAIL)	Not lit	Lit	AC input overvoltage, undervoftage	Measure AC input voltage.
				DC24V output OFF	Is DC24V load too high?
	LED3 (Red) (BAT.AL)	Not lit	Lit	Batterv alarm (2.6V and less)	Replace battery immediately.
QX141 QX141-1	LED1 (Green, Red)	Green LED flickers	Red LED stable	Watch dog alarm	One of the PCBs in the CPU module may be defective.
	LED2 (Green, Red)	Green LED flickers	Red LED stable	Memory parity error	The DRAM in the QX141 card or one of the QX42□ cards may be defective.
QX721 /QX722	LED1 Red) LED2 Green)	Not lit	Lii	Watch dog alarm Software monitor	The PCB may be defective.
QX524/QX521	SD (Green)	Lit	Not lit	Indicates that data is being transferred between operation board.	Either the PCB or cable may be defective.
	RD (Green)	Lit	Not lit	Same as above	Same as above
	FBAL1 (Red)	Not lit	Lit	Spindle encoder no signal alarm	The cable may be broken or the spindle encoder may be defective.
	FBAL2 (Red)	Not lit	Lit	Same as above	Same as above

LED on operation board side

QY201

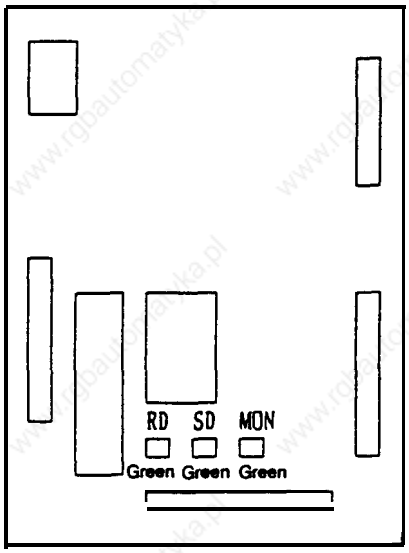

Note 1) QY271 and MC231 do not use LEDs so explanations have been omitted.

QY221

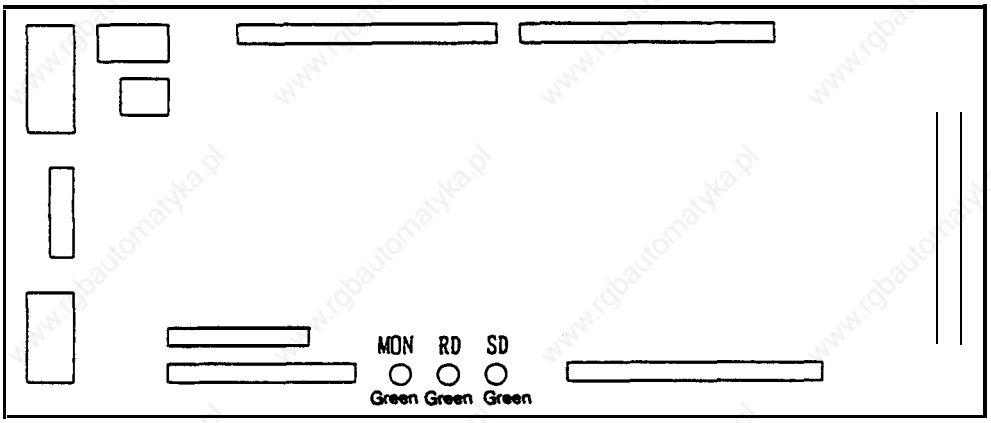

Card name	LED name	State		Details of display	Measures during error
		Normal	Error		
QY201 QY221	RD (Green)	Lit	Not lit	Data reception (Indicates that communication data from the control unit is beina received.)	If RD goes out or SD lights when MON is flickering, the cable may be broken or the PCB on the control unit may be defective. If both RD and SD are out, this PCB may be defective.
	SD (Green)	Lit	Not lit	Data transmission (Indicates that communication data is being transmitted to the control unit.)	
	MON (Green)	Flicker	Lit Not lit	System monitor	The PCB may be defective. However, if all LEDs (RD, SD, MON) are out, the DC24V supply OFF (NC power supply) may be interrupted.

3.4 Presumed Causes for Alarms

The presumed causes for alarm related to the hardware in the MELDAS 500 Series are explained in this section.

1. When the system stops due to a system error, the messages shown below are displayed on the screen with the register of the point when the error occurs.
   Write down the displayed register, and contact the service center.

Message	Details	Possibility of hardware defect	Alarm generated simultaneously
Parity error	PAM error	Great	Watch dog error
Bus error	An address that does not exist was accessed.	Small	Watch dog error
Zero divide	Division of a denominator that is zero was attempted.	Very small	
Watch dog error	The system operation stopped.	Medium	
Illegal exception	An illegal interrupt occurred.	Small	

9 inch CRT (40-character mode)

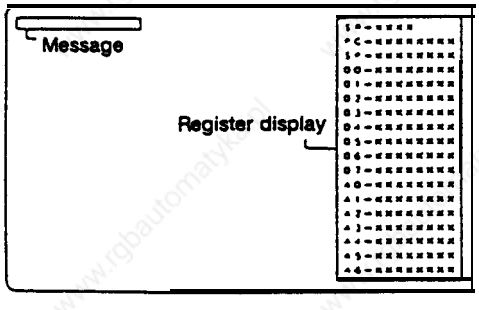

9 inch CRT (80-character mode), 14 inch CRT

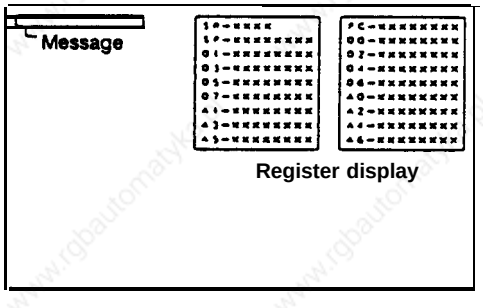

2. The following message are alarms that when occur, the system does not necessarily stop.

Message	Details	Possibility of hardware defect	Measures for hardware (Small letters are causes other than the hardware)
207 CRC error	The ROM mounted on QX81□ is defective.	Great	Replace QX81 Cl Reprogram
Z11 RAM error	Error in the DRAM mounted on QX141.	Great	Replace QX141
Z51 EEROM error	This occurs when the parameters were not correctly written into the EEROM.	Small	Replace QX141
Z52 Battery drop	The voltage of the battery mounted to save the data in the NC has dropped. (Life)	100%	Replace battery
Z53 Overheat	The temperature of QX141 or the operation board has risen over the specified value. Specified value QX141 ON at 70±5°C OFF at 55±5°C Operation board ON at 70±5°C OFF at 60±5°C	Small (FAN)	Fan trouble However, in most cases this is caused by the working environment, so confirm the heat measures taken for the body as explained in the 'Connection Manual'.
Z55 DIO 24V error	The required 24V power is not being supplied to the I/O interface DIO-A card (DIO card).	Small	Replace DIO card Confirm 24V power supply connection Check for short circuit of 24V load on machine side
Z10 QX42□ SRAM error	Error (memory panty error, etc.) in the machining program registered memory (QX42□). A memory parity error in the CPU module QX42□ will cause the system to stop as explained in item (1).	Great	Replace battery Replace QX42□ Initialize register memory

There are primary alarms (alarms which when occur, another alarm also occurs), and secondary alarms (alarms that occur even with other cause). Here, the presumed caused of the primary alarm must be investigated.

Example

(1) If both the panty error and watch dog error occur simultaneously, investigate the panty error.

(2) If battery drop and another alarm occur simultaneously, investigate the battery drop first.

(1) Parity error

(a) Meaning

A parity bit is added to improve the reliability of the CPU card DRAM and memory card QX42□ SHAM.

When data is written into the above RAMs, the data is written into the parity bii memory so that the number of "1" bii , including the parity bit, becomes an odd number, for each byte. Then, if the memory details change for any reason, the change will be detected when the data is read out, and a parity error will occur.

(The changes cannot be detected when two bits are changes simultaneously. However, the probability that two bits will change in all addresses that the software accesses is very low.)

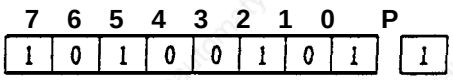

The number of bit 0 to 7's "1s" are even, so "1" is written in.

(b) Cause and measures

Handling of this error will diier according to whether this is a CPU card DRAM parity error or a QX42□ SHAM parity error. It is important to determine which panty error has occurred.

How to determine the error

List of presumed causes

No.	Presumed cause	Presumed cause (details)	Measures	Proba-bility
1	SRAM Parity error	. The voltage of the back up battery (Li battery mounted on front of QX084) has dropped. If the message "Z52 Battery drop' appears on the screen after the power is turned on, and the QX084 BAT.AL LED lights, the battery voltage has dropped. The details registered in the SRAM may have been lost when the power was turned off.	Replace with a new battery.	Great
		. Memory card defect If the battery voltage has not dropped, the card may be defective.	Replace QX42□.	Medium
2	DRAM Parity error	The CPU card DRAM may be defective.	Replace QX141□.	Medium
3	Software	. The RAM area has not been initially cleared, so a SRAM parity error has occurred.	Initial clear	Great
		. An illegal address (area where memory is not mounted) was accessed. normally a bus error will occur.	Change to the newest software version, and see how it works.	Small
4	Others	. AC FAIL and MLOCK are not possible when the power is turned off due to control power QX084 defect.	Replace QX084	Small

(2) Bus error

(a) Meaning

Each PCB (and internal circuit) mounted in the control unit has a characteristic address assigned to it looking from the MPU of the CPU card QX141, etc. (This is called the address MAP or memory MAP.)

When the software runs away or an area other than this designated address is accessed, an answer will not be returned and a bus error will occur.

(b) Cause and measures

List of presumed causes

No.	Presumed cause	Presumed cause (details)	Measures	Proba-bility
1	Card defect	. Carddefect Replace the control modules in the order of the CPU module, CRTC module, DIO module, etc. When the alarm stops when one of the above control modules is replaced, replace the PCBs on that control modules. For example, if it is the CPU module, replace the PCBs one by one in the order of QX141, QX721 /QX722, QX42□, QX81□.	Replace with a good control module. Replace with a good PCB.	Great
2	Noise	. Noise If measures against noise have not been taken, the system may be malfunctioning due to noise that is entering the NC through the power cable and connection cables.	Confirm the 'cable clamp treatment', 'grounding treatment', 'surge killer treatment of relays, etc.', according to the 'Connection Manual', and treat if treatment hasnotbe executed already.	Small
3	Software	. Malfunction during a specific operation	Change to the newest software version, and see how it works.	?
		. The user PLC software accessed an illegal address.	Confirm the software list.	?

(3) Zero divide

(a) Meaning

When calculating A+ B, B=0.

(b) Cause and measures

Check the software list to see if there is any cause for the data corresponding to B being zero.

(4) Watch dog error

(a) Meaning

A watch dog error occurs when the system is not running properly to ensure the system's safety. This error has a function to stop the system immediately.

In a system that runs in real time such as the NC, a routine that is passed periodically in cycles is established. Each time this routine is passed, a special counter (watch dog timer) is reset. If the system does not run properly for any reason, this routine will not be passed, so this counter will not be reset If a set frequency clock is attached to this counter's clock terminal, this counter will overflow. This output will apply an interrupt on the CPU, and will take appropriate measures immediately.

Detection positions

The CPU card (QX141, etc.) and servo CPU cards (QX721/QX722, QX151, QX154) have watch dog error detection circuits, and the LED will light when a watch dog error occurs.

(b) Cause and measures

Determining the cause of these messages is diiicult, but the presumed causes are shown below.

List of presumed causes

No.	Presumed cause	Presumed cause (details)	Measures	Proba-bility
1	CPU module defect	. CPU module defect The CPU module in the hardware is defective. (la) Servo CPU card defect This card may be defective if LED1 on the QX721/QX722 card is lit. (1 b) CPU card defect If a watch dog error occurs even when LED1 on the QX721/QX722 card is not lit, the CPU card (QXl41, etc.) may be defective. (lc) Main memory card, user PLC card defect If a watch dog error occurs even when LED1 on the QX721/QX722 card is not lit, the main memory card or the ROM in the user PLC card QX81□ may be defective.	Replace with a good control module. Replace with a good PCB.	Great
2	Defect in other card	. Defect in other card If a watch dog error occurs even when LED1 on the QX721/QX722 card is not lit, QX42□ or another control module may be defective.	Replace with a good PCB.	Small
3	Control power supply defect	. QX084 defect There may be an error in the QX084 DC output. Measure the voltage and ripple with the QXO84 test pin CPD03.	Replace with a good PCB.	Small
4	Defective insertion	• Defective insertion of each card The control module may be inserted improperly into the back panel, or the cassette memory QX81□ insertion may be improper.	Re-insert.	Medium

No.	Presumed cause	Presumed cause (details)	Measures	Proba-bility
5	Noise	. Noise If measures against noise have not been taken, the system may be malfunctioning due to noise that is entering the NC through the power cable and connection cables.	Confirm the "cable clamp treatment', 'grounding treatment", 'surge killer treatment of relays, etc.', according to the 'Connection Manual', and treat if treatment has not be executed already.	Small
6	Software	. Malfunction during a specific operation	Change to the newest software version, and see how it works.	?
		. The user PLC software accessed an illegal address.	Confirm the software list.	?

(5) Illegal exception

(a) Meaning

This error indicates that an illegal interruption occurred.

(b) Cause and measures

As with the watch dog error, the cause of this error is very difficult to determine, but the probable causes are listed below.

List of presumed causes

No.	Presumed cause	Presumed cause (details)	Measures	Proba-bility
1	Card defect	. Card defect Replace the control modules in the order of the CPU module, CRTC module, DIO module, etc. When the alarm stops when one of the above control modules is replaced, replace the PCBs on that control modules. For example, if, it is the CPU module, replace the PCBs one by one in the order of QX141, QX721/QX722, QX42□, QX81 CI.	Replace with a good control module. Replace with a good PCB.	Great
2	Control power supply defect	. QX084 defect There may be an error in the QX084 DC output. Measure the voltage and ripple with the QX084 test pin CPD03.	Replace with a good PCB.	Small
3	Defective insertion	. Defective insertion of each card The control module may be inserted improperly into the back panel, or the cassette memory QX81□ insertion may be improper.	Re-insert.	Medium
4	Noise	. Noise If measures against noise have not been taken, the system may be malfunctioning due to noise that is entering the NC through the power cable and connection cables.	Confirm the 'cable clamp treatment', 'grounding treatment", 'surge killer treatment of relays, etc.', according to the 'Connection Manual', and treat if treatment has not be executed already.	Small
5	Software	. Malfunction during a specific operation . The user PLC software accessed an illegal address.	Change to the newest software version, and see how it works. Confirm the software list.	? ?

(6) 207 CRC error

(a) Meaning

A memory parity for the ROM card is not mounted on the cassette memory QX81□, but CRC is added to a specific address in QX81□ to improve the reliability.

This CRC is data that performs a special calculation for each address data when the cassette memory is being programmed, and is like the vertical memory parity bit.

CRC is calculated for each address each time the system power is turned on, and checked to match the CRC data that has been pm-programmed into the ROM. If the results do not match, a CRC error will occur.

(b) Cause and measures

List of presumed causes

No.	Presumed cause	Presumed cause (details)	Measures	Proba-bility
1	Card defect	. QX81□ defect	Replace with a good PCB.	Great
2	ROM CDT defect	. ROM CDT defect ROM CUT with ROM writer is incomplete	Perform ROM CDT again, and see how it works.	Small
3	ROM writer defect	. ROM writer defect The ROM writer itself may be defective. ROM CUT voltage ROM CUT pulse width	Check the ROM CUT voltage wlth a digital multimeter and oscilloscope to seethatitisas specified.	Small
4	Control power supply defect	. QX084 5V output defect There may be an error in the QX084 5V output. Measure the voltage and ripple with the QX084 test pin CPD03. Check that the TEST pin has not be set by mistake.	Replace with a good PCB. Release setting.	Small
5	Defective insertion	. Defective insertion of cassette memory QX81 Cl The cassette memory QX81□ insertion may be improper.	Re-insert.	Medium

(7) ZII RAM error

(a) Meaning

When the power is turned on, the DRAM mounted on CPU card QX141 is tested. This error will occur if any trouble is found.

(b) Cause and measures

List of presumed causes

No.	Presumed cause	Presumed cause (details)	Measures	Probability
1	Card defect	• QX141 defect	Replace with a good PCB.	Great
2	Control power supply defect	• QX084 5V output defect There may be an error in the QX084 5V output. Measure the voltage and ripple with the QX084 test pin CPD03.	Replace with a good PCB.	Small
		Check that the TEST pin has not be set by mistake.	Release setting.	

(8) Z51 EEROM error

(a) Meaning

This error occurs when the parameters are not correctly written into the EEROM.

(b) Cause and measures

List of presumed causes

No.	Presumed cause	Presumed cause (details)	Measures	Probability
1	EEROM defect	• The EEROM in QX141 is defective.	Replace with a good EEROM.	Great
2	Card defect	• QX141 defect	Replace with a good PCB.	Great
3	Control power supply defect	• QX084 5V output defect There may be an error in the QX084 5V output. Measure the voltage and ripple with the QX084 test pin CPD03.	Replace with a good PCB.	Small
		Check that the TEST pin has not be set by mistake.	Release setting.	

(9) Z52 Battery drop

(a) Meaning

The voltage of the battery mounted on the front of the control power supply to save the data in the NC has dropped below the specified value (2.6V).

(b) Cause and measures

The direct cause is that the battery voltage has dropped below the specified value (2.6V) due to the battery life. However, if the above alarm occurs at a point remarkably sooner than the battery life (7 years), the discharge current in the control PC6 may be excessive. Measure the discharge current before replacing the current.

List of presumed causes

No.	Presumed cause	Presumed cause (details)	Measures	Probability
1	Battery life	. Battery life	Replace with a new battery.	Great
2	Card defect	. SRAM memory card QX42□ card defect The SRAM memory card QX42□ is using too much of the battery current.	Replace with a good PCB.	Small
		. Other card defects Some of the PCBs use the battery for the CMOS power supply. QX141/QX521/QX524/QX571	Replace with a good PCB.	
3	Control power supply defect	. QX084 defect The QX084 is using the battery for the CMOS power supply.	Replace with a good PCB.	Small

(lo) Z53 Overheat

(a) Meaning

This alarm occurs when the NC control unit (measurement position is QX141) or the operation board (measurement position is QY201 or QY221) has risen above the specified value.

NC control unit : Alarm occurs at 70±5°C, turns off when below 55±5°C
Operation board : Alarm occurs at 70±5°C, turns off when below 60±5°C

(b) Cause and measures

List of presumed causes

No.	Presumed cause	Presumed cause (details)	Measures	Proba-bility
1	Working environment	. The NC ambient temperature (0 to 45°C) has been exceeded.	Check that the unit is not in direct sunlight, and is not near a heat source (heater, etc.).	Great
2	Working environment	. The temperature is within the NC ambient temperature (0 to 45°C), but the body temperature has risen 10°C or more.	Refer to the 'Connection Manual' and check that measures against heat have been taken.	Great
3	Fan trouble	. Fan trouble	Replace with a good fan.	Medium

(11) Z55 DIO 24V error

(a) Meaning

A 24V power supply must be connected by the user to the i/O interface DIO-A card (DIO card). This alarm will occur if the 24V power suppiy is not connected, or if the 24V load (relay, etc.) on the machine side has short circuited, and the 24V power has dropped.

(b) Cause and measures

List of presumed causes

No.	Presumed cause	Presumed cause (details)	Measures	Proba-bility
'1	No 24V power supply connection	. No 24V power supply connection	Refer to the 'Connection Manual' and connect a 24V power supply.	Great
2	24V load on machine side short circuited	. The DO signal wire has short circuited with the GND, and an excessive load current has flowed. in this case, the output IC on the I/O interface DIO-A card may have been destroyed, so replacement of the card may be necessary.	Review the wiring.	Great
3	Card defect	. i/O interface DIO-A card defect	Replace with a good card.	Small

(12) 210 QX42□ SRAM error

(a) Meaning

This alarm occurs when an error (memory parity error, etc.) has occurred in the machining program register error (QX42□).

(b) Cause and measures

List of presumed causes

No.	Presumed cause	Presumed cause (details)	Measures	Proba-bility
1	Battery alarm	. Battery alarm occur simultaneously. Follow '252 Battery drop'.	Follow the measures in 'Z52 Battery drop'.	Great
2	Card defect	. QX42□ defect	Replace with a good card.	Small

3.5 Procedure for Inspection of Each Trouble

(1) Confirmation of power voltage

Confirmation of input power voltage

The 3-phase input power voltage is connected to the non-fuse breaker terminals R.S.T. on the NC side via the non-fuse breaker on the machine side. Confirm that the specified voltage is being output here.

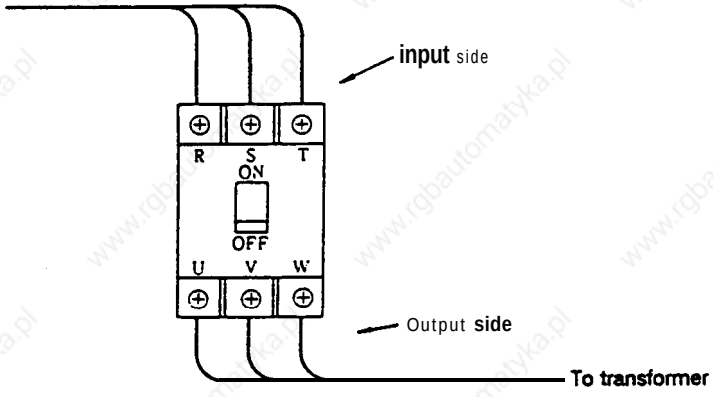

Fig. 3.5.1

The single-phase input voltage is connected to the DC power QX084 terminal on the control unit, so confirm that the specified voltage is being output here.

AC100V $^{+10\%}_{-15\%}$

Confirmation of DC power voltage

The DC power voltage is output to the DC power QX084 connector on the control unit, so confirm that the specified voltage is being output here.

	Max. total fluctuation rate	Max. ripple voltage
+5V	-2% ~ +2%	~ 50mV
+12V	-2% ~ +2%	~ 60mV
-12"	-2% ~ +2%	~ 60mV
+24V	-15% ~ +15%	~ 200mV

(Note 1) The QXO64 machine input/output power (+24V) capacity will increase according to the system, so refer to the corresponding item in the 'Connection Manual'.

(Note 2) A voltage adjustment variable resistor is not mounted on QX084, so settings to slightly fluctuate the 5V voltage for testing will be required.

1-2 ON 4.75"

2-3 ON 5.25"

(2) Connection of control power supply

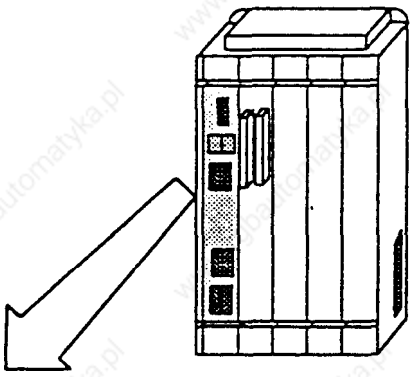

Fig. 3.52 Mounting position of control power supply

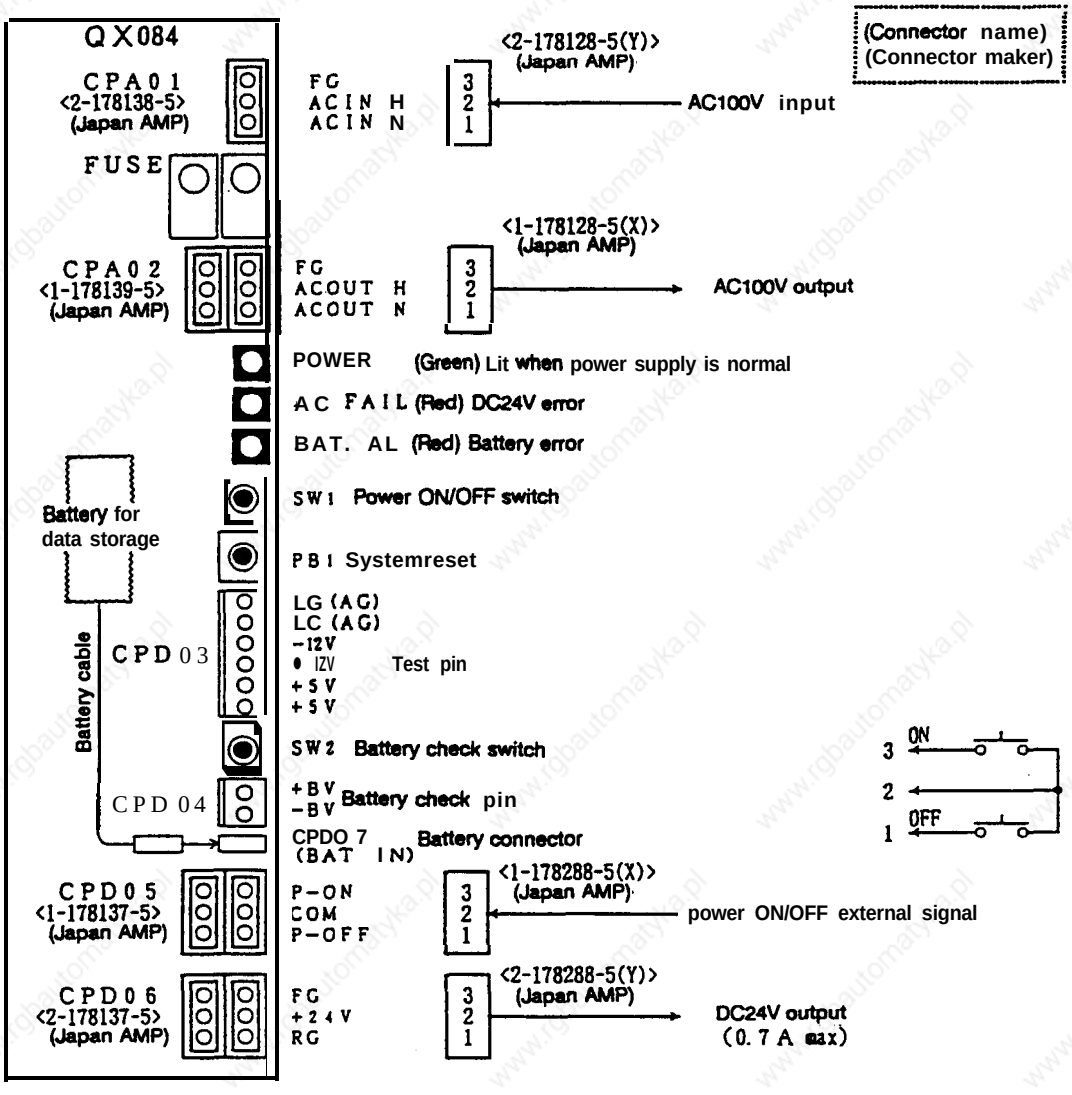

Fig. 3.53 Control power supply QX084 connector layout

(Note 1) Use a twisted pair shield cable that is $2mm^2$ or longer for AC1 WV wiring.
(Note 2) Use a shield cable for the wiring to the AC ON/Off switch, and connect the shield to the common terminal.

3.6 Replacement of Various Units in Control Unit

The procedure for replacing the control unit is shown in Fig. 3.6.
When replacing the unit, refer to this drawing and the following explanations.

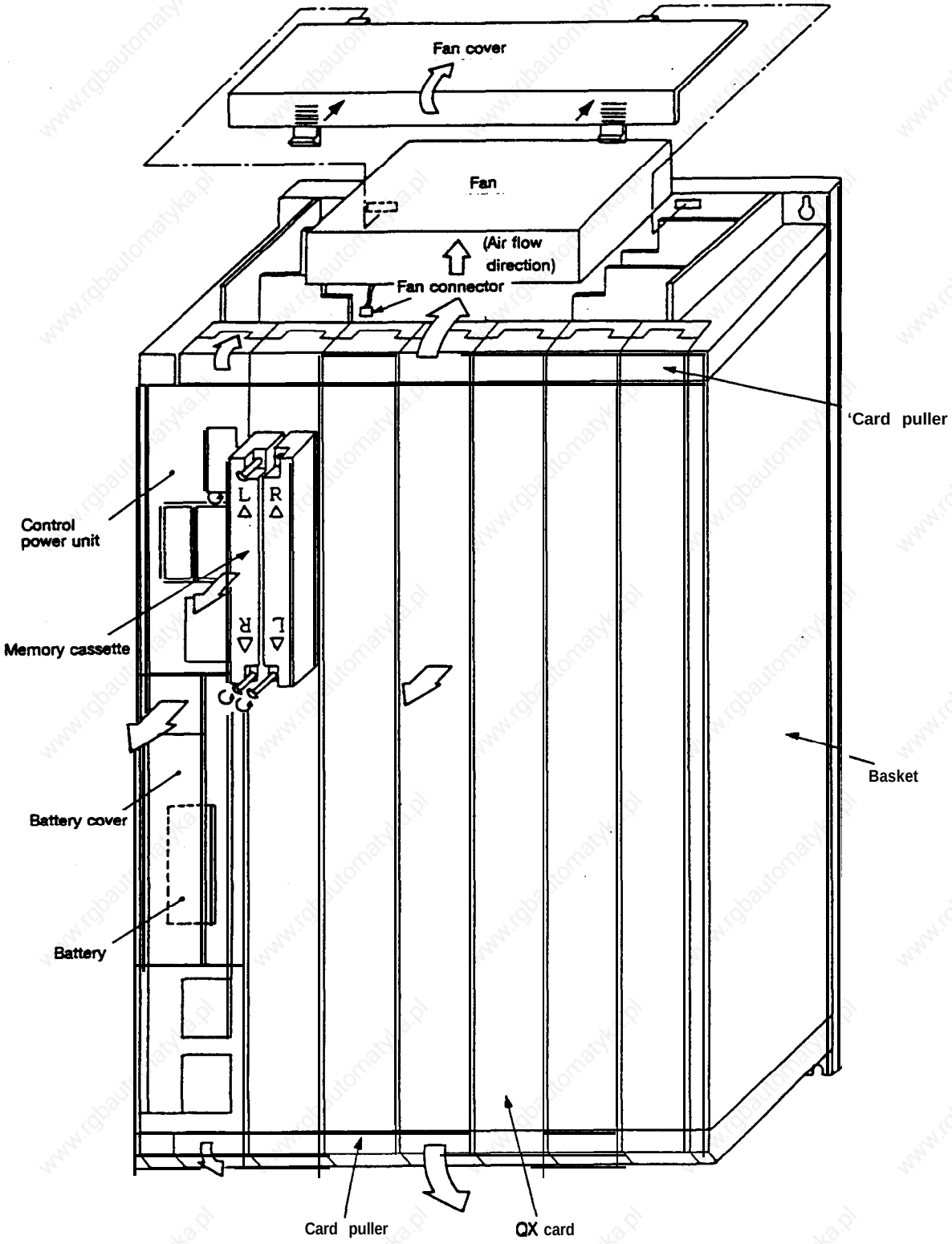

Fig. 3.6 Control unit replacement procedure drawing

3.6.1 Replacement of power unit

① Disconnect all connector cables, etc.
② Rotate the upper and lower card pullers on the power unit, and pull out in the direction of the arrow.
③ When mounting a new power unit, follow steps ② and ① in reverse.

3.6.2 Replacement of cooling fan

① Follow procedure 3.6.1 and remove the power unit.
② Press the notch on the front of the fan cover, and remove the cover.
③ Put your hand in through the front of the basket and pull out the connectors connected from the fan to the back panel.
④ Remove the fan. (It is only held by the fan cover.)
@When mounting a new fan, follow steps @to ① in reverse.
(Insert the fan while sliding it along the guide.)

3.6.3 Replacement of the QX card

①If a connector is connected, remove it with the following steps.
(1) For the following type of connector, loosen the two screws, and pull out the connector while holding the fitting.

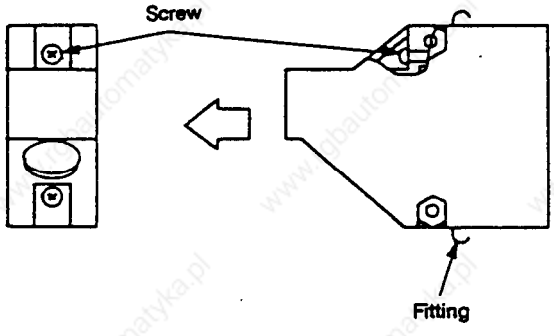

(2) For the following type of connector, loosen the two screws, and pull out the connector.

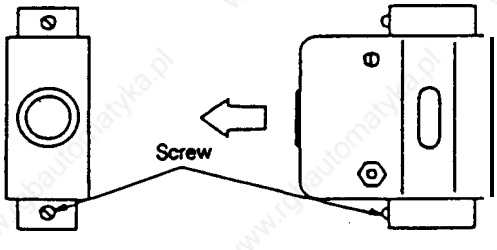

(3) For the following type of connector, pull out the connector while pressing it in the direction of the arrows.

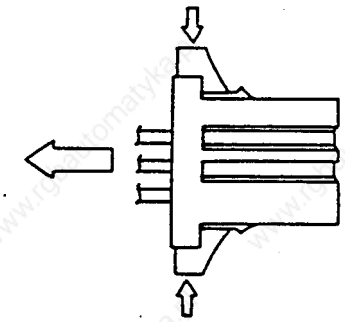

(4) For the following type of connector, open the claws in the direction of the arrows and pull out the connector.

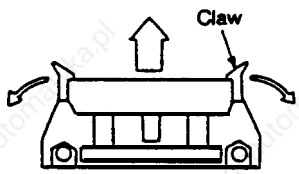

(5) For the following type of connector, pull out the connector while pressing it in the direction of the arrows.

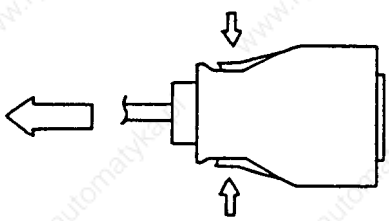

② When the upper and lower card pullers are opened into the direction of the arrow shown in Fig. 3.6, the QX card will protrude slightly, and can be pulled out.

③ When mounting a new QX card, slide the card into the back along the guide groove on the basket. The card name is indicated on the basket, so make sure that the card is inserted into the correct slot.

④ Close the card lock.

3.6.4 Replacement of memory cassette card

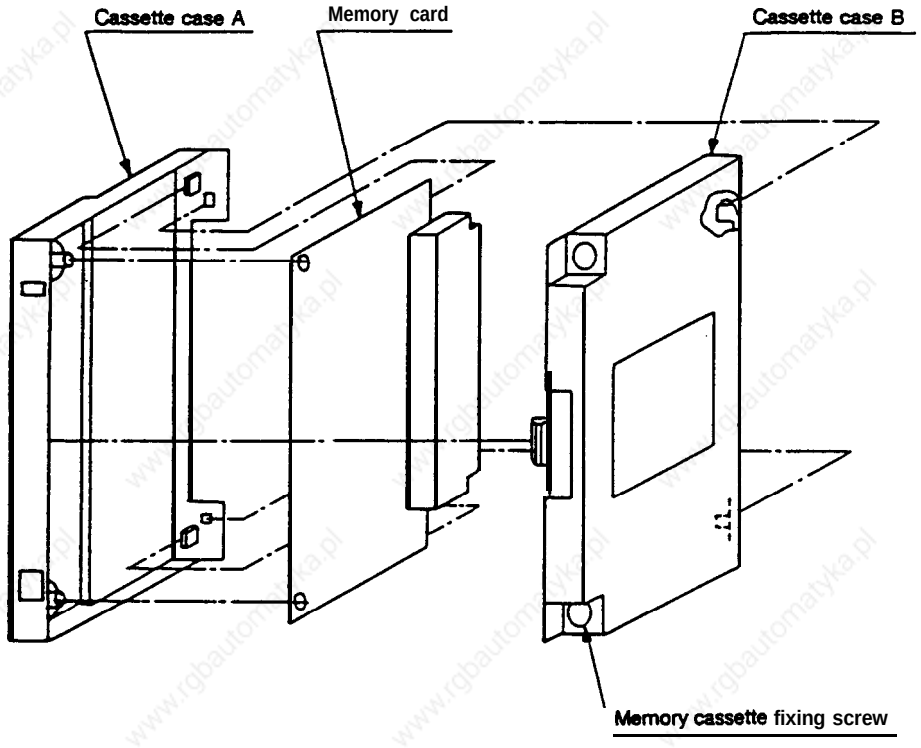

① Loosen the two screws fixing the memory Cassettes, and remove the card from the memory card unit.
② Release the claws from cassette case A while pressing down on the notch on the front of cassette case B.
③ Remove cassette case B from cassette case A .
④ After lifting up the front end of the memory card, pull the connector side end from the cassette case A groove.
⑤ When mounting a new memory card, follow steps @to ① in reverse.

3.6.5 Precautions during replacement

(1) Take care as parts are mounted on both sides of the QX card. Parts are mounted on the PCB front surface (C surface) and back surface (S surface).
- Take care not to damage the S surface parts when replacing the CPU, ROM or PAL

(2) The memory cards (QX423, QX424, QX425) save data with a super capacitor.
- Always replace the card within 30 minutes.
- The memory will be damaged if the card is touched with a metal part (ex. screwdriver).

(3) Normally, parts that are suspectable to static electricity are mounted on the PCB.
- Workers must demagnetize themselves before starting operation. (Especially during the winter.)
- Do not touch the electronic parts.
- Carpets, etc., generate a static electricity with a very high voltage. Take special care.

4. Installation Adjustment Procedure

Take special care to the following points when installing the MELDAS 500.
If these points are not observed, the NC performance may.not be satisfactory.

4.1 Working Conditions

The following conditions are to be applied when installing a cabinet or pendant designed and manufactured by the machine maker. Observe the points listed in section '3.3 Cabinet and pendant design conditions in the 'Connection Manual' to satisfy the following conditions.

(1) Ambient temperature
During operation: 0 to 45°C (The ambient temperature for the control unit is 0 to 55°C)

Observe a temperature of 10 to 30°C during operation (pendant internal temperature 10 to 40°C) when using a system that has a built-in floppy disk unit.

(2) Humidity
Normal relative humidity: 75% or less

The insulation or parts will deteriorate easily if the humidity is high. Special dehumidification measures are not necessary, but avoid installing the system in areas with extreme humidity.

(3) Vibration
During operation: 0.5G or less

In systems with a built-in floppy disk unit, the unit will malfunction if the pendant is moved suddenly during the floppy disk operation.

During transportation: 3.5G or less

(4) Atmosphere
Avoid use in environments that have large quantities of dust or high concentrations of organic or corrosive gas mist.

4.2 Input Power

(1) Input voltage
Control unit: AC100V $^{+10\%}_{-15\%}$

(2) Frequency: 50/60Hz ±2%

(3) Power consumption: Refer to section '3.2.3 Power consumption' in the 'Connection Manual' for the control section.
Refer to the 'MELDAS Servo System Specifications' for the drive section.

4.3 External Connections

Follow the procedure given below for connections from the control unit to external sources.

4.3.1 Connection of input power

The 3phase input power is connected to the amplifier terminal via the non-fuse breaker on the machine side.
The NC control unit's single-phase AC100V is connected to connector CPA01 on NC power QX084. (Refer to the figure in section '3.5 Procedure for inspection of each trouble, (2) Connection of control power supply".)

4.3.2 Connection of motor

Follow the 'Spindle and Servo Specifications'.

4.3.3 External connections

Connect the external connections according to section '4. Machine-to-machine connections' in the 'Connection Manual'. All of the cables led into the control unit and operation board must be shielded and clamped according to '3.4 Lead-in of cables and clamping' in the 'Connection Manual'.
These clamps not only support the cables but also shield the cables, and must be enforced for the system to operated properly and not malfunction due to noise, etc.

General system drawings are shown on the following page for explanation purposes.
Refer to the 'Connection Manual' for actual connections.

With 9 inch CRT display

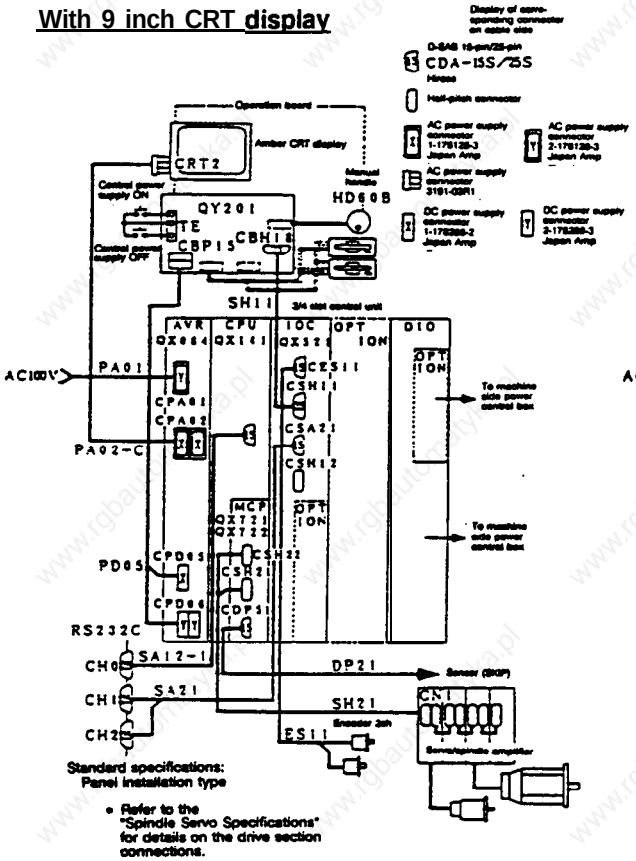

With EL display

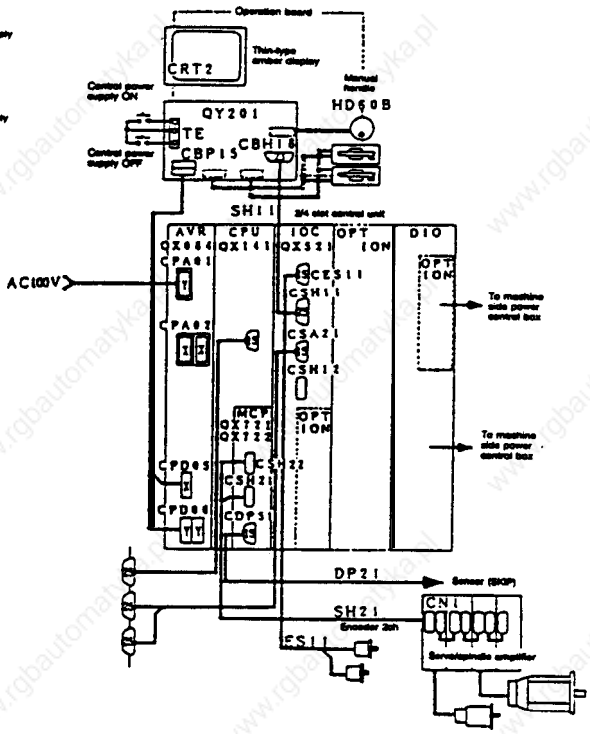

With color CRT display

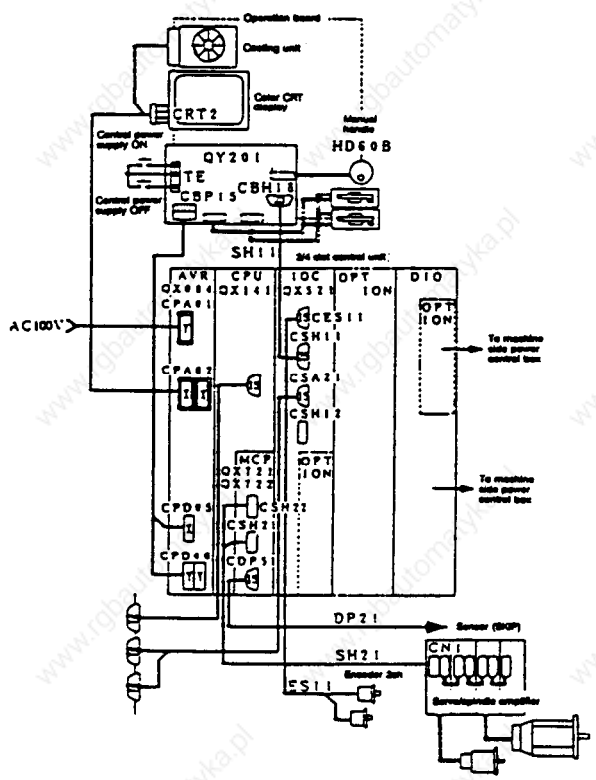

With color LCD display

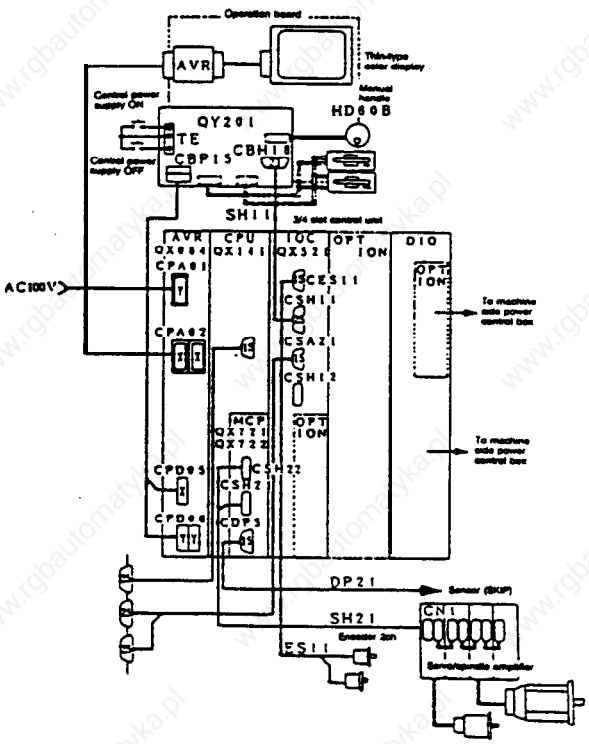

Fig. 4.3 General system drawings (for reference)

4.4 Installation Check List

No.	Check item	Check details	Related sections
1	Check of wnfiguration component's appearance	Is them any dirt or damage on the NC wntrol unit or operation board caused during transportation?	
		Have the PCBs in the card basket dislocated during transportation. Follow section 3.6 if the PCBs are dislocated, and securely insert them into the card basket.	Section 3.6
2	Check of installation environment (during machine installation)	Is the ambient temperature of where the power control box is to be installed within 0°C to 45°C (the internal tempemture rise in the power control box must be 10° or less). Even if the external temperature is 45°C or less, do not install the system in direct sunlight, near a heat source, or outdoors.	Connection Manual, Section 3.1
		In systems where the floppy disk unit 4FD01A is mounted, is the ambient temperature of where the power wntrol box is to be installed within 10°C to 30°C (the internal temperature rise in the pendant must be 10° or less).	Connection Manual, Section 3.1
		Avoid installation in environments that have large quantities of dust or high wncentrations of organic or corrosive gas mist.	Connection Manual, Section 3.1
3	Confirmation of settings	Confirm the PCB settings.	
		Confirm that the rotary switches on the PCB are correctly set.	
		Confirm that the DIP switches on the PCB are correctly set.	
4	Confirmation of PCB insertion	Confirm that the PCBs are securely inserted into the card basket. If the PCBs are inserted after installing onto the power control box, the DIN connector match may be loose.	Section 3.6
5	Connection of external cables and grounding wire	Are the external cables screwed or locked?	Section 3.6
		Have the cables been clamped7 Has the cable sheath been peeled, the shield exposed and that section wntacted against the earth plate with a cable clamp7	Connection Manual, Section 3.4
		Has each earth plate been grounded to one point7	Connection Manual, Section 3.4
		Has the NC control unit been property grounded7	Connection Manual, Section 5
		Has the operation board been properly grounded7	Connection Manual, Section 5
		Have the A, B and C signal wire groups been separated7	Connection Manual, Section 5
6	Connection of power cable	Has the power cable been properly connected?	Section 3.5
7	Confirmation of input power voltage and frequency	NC control unit: AC100 + 10% to −15%, 50/60Hz ± 2%	Section 4.2
6	Confirm that the signal wire has not been ground faulted	Confirm that the output of the I/O interface DIO-A has not been short circuited with the grounding.	Connection Manual, Section 4.5
		Confirm that the output of the I/O interface DIO-A has not been short circuited with the 24V.	Connection Manual, Section 4.5
		Confirm that the DC24V output of the NC wntrol unit has not been short circuited with the OV.	Connection Manual, Section 4.5

4.5 Turning on the Power

Precautions for turning on the power

The power is turned on in the following order.

(1) Confirm that the main breaker is ON. If OFF, turn it ON.

(2) Press the 'POWER ON' switch on the CRT setting and display unit. The 'READY' lamp will light after approximately three seconds, indicating that the control unit is in the operable state.

(3) Press the "RESET" switch on the CRT setting and display unit. Now, operation will be ready. The operable state will be entered even if this 'RESET switch is not pressed, however, make it a habit to press the "RESET" switch after turning on the power for safety and confirmation.

4.5.1 Power on, ready on, emergency stop, ready off flow chart

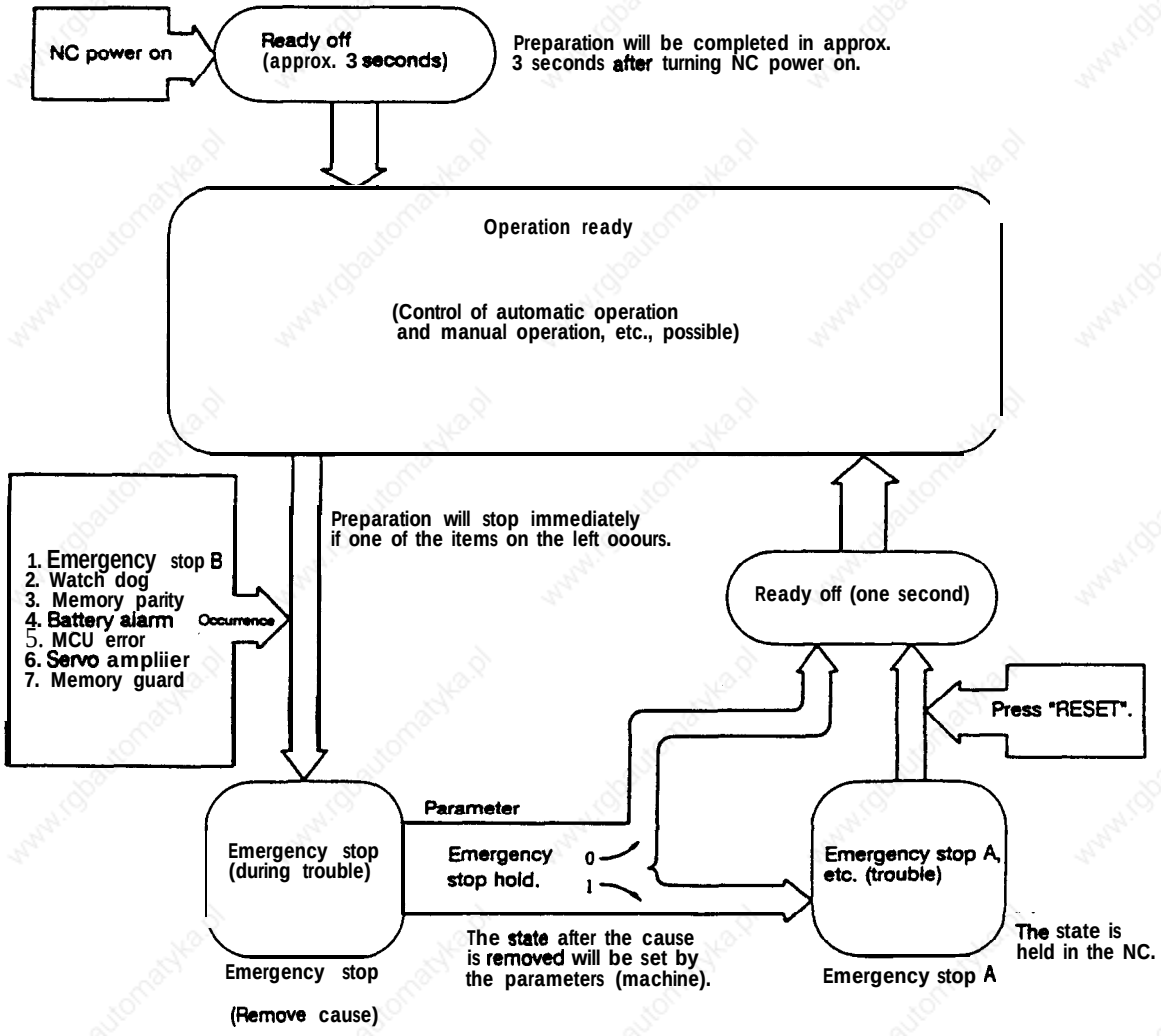

4.6 Setting Capacity (hardware setting)

Outline

Settings are made to determine the various constants in the NC, characteristic constants on the machine side and specifications, etc. Settings are made with the hardware settings and software parameters.

If these settings are changed, the machine movement will be obstructed, so take special care when making any changes.

The hardware settings will be explained in this section.

Hardware settings are made by setting the setting pins, toggle switches and rotary switches mounted on each card in the control unit.

These settings have been set at the factory before shipment according to the "MELDAS-500 Internal setting table' shown on the next page, and thus these do not need to be changed.

This "MELDAS-500 Internal setting table' is included with each NC unit. (The one shown on the next page is an example.)

When replacing the cards or unit, refer to this "MELDAS-500 Internal setting table' and the current card unit to make correct settings.

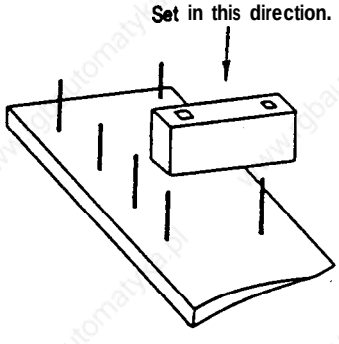

Precaution: DIO card system map setting method

The emergency stop input setting plug and system map binary switch (SW1) setting (SET=) for each DIO card is performed with the following settings.

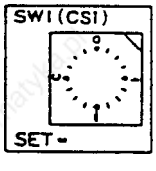

	DIO #1	DIO #2	DIO #3	DIO #4	DIO #5	DIO #6
Emergency stop input	ON	OFF	OFF	OFF	OFF	OFF
System map SET=	0	2	4	6	8	A

MELDAS-500 Internal setting table

Client	Msgr.
Machine model name	

Control power supply

□ QX084	
TEST ● ● ●	5V adjustment
1 2 3	
Set to the above setting regardless of model	

Recording method
(1) Place a check in the □ according to the PCB mounted on the NC control unit, operation board and drive section.
(2) If there are several PCBs to be filled into the columns, circle the name of the PCB mounted.
(3) Note the rotary switch setting value after the "Setting value =" for the rotary switch.
(4) The settings that are shaded are fixed (cannot be changed).

CPU module

□ QX141/QX141-1	□ QX423/QX424/QX425	□ QX721/QX722	□ (L)QX815/QX816
CS1 Setting value =0	SPC ●—● Super C	S0 ● ● ICE	□ (R)QX813/QX814/QX815/815
Set to the above setting regardless of model	1 2	1 2	No settings
	Set to the above setting regardless of model	Set to the above setting regardless of model	

CRTC module

□ QX524/QX521	□ QX423/QX424/QX425	□ QX731	□ QX738	□ QX
No settings	SPC ●—● Super C	S0 ● ● ICE	S1 ● ● Final end	
	1 2	1 2	1 2	
	Set to the above setting regardless of model	Set to the above setting regardless of model	Set to the above setting regardless of model	

DIO module

□ QX531/QX533/QX535/QX537/QX539 #1	□ QX531/QX533/QX535/QX537/QX539 #2	□ QX531/QX533/QX535/QX537/QX539 #3	□ QX531/QX533/QX535/QX537/QX539 #4	The upper level is the base card, the lower level is the add-on card.
CS1 Setting value =0	CS1 Setting value =2	CS1 Setting value =4	CS1 Setting value =6	
□ QX311/QX312 QX314/QX317	□ QX311/QX312 QX314/QX317	□ QX311/QX312 QX314/QX317	□ QX311/QX312 QX314/QX317	The add-on card has no settings.

Expansion module 1

□ QX571	□ QX423/QX424/QX425	□ QX771	□ QX721/QX722	□ (L)QX813/QX814/QX815/QX816
XIF2 ● ● 2nd card	SPC ●—● Super C	S0 ● ● ICE	S0 ● ● ICE	□ (R)QX813/QX814/QX815/QX816
1 2	1 2	1 2	1 2	No settings
	Set to the above setting regardless of model	Set to the above setting regardless of model	Set to the above setting regardless of model	

Expansion module 2

□ QX571	□ QX423/QX424/QX425	□ QX771	□ QX721/QX722	□ (L)QX813/QX814/QX815/QX816
XIF2 ●—● 2nd card	SPC ●—● Super C	S0 ● ● ICE	S0 ● ● ICE	□ (R)QX813/QX814/QX815/QX816
1 2	1 2	1 2	1 2	No settings
	Set to the above setting regardless of model	Set to the above setting regardless of model	Set to the above setting regardless of model	

Operation board

□ QY201	□ QY221	□ MC231 #1	□ MC231 #2	□ QY271
CS1 Setting value =	CS1 Setting value =	S1 ●—● GND common	S1 ●—● GND common	No settings
CS2 Setting value =	CS2 Setting value =	S2 ●—● GND common	S2 ●—● GND common	
0: Standard 9" CRT		S3 ● ● 24V common	S3 ● ● 24V common	
1: Standard 9" EL		S4 ● ● 24V common	S4 ● ● 24V common	
2: Standard 14" CRT		S5 ● ● Always OFF	S5 ● ● Always OFF	
3: Standard 10.5" LCD		S6 ● ● 2nd card	S6 ● ● 2nd card	
4 and following: Custom		1 2	1 2	

Drive section

□ MDS-A-CV(ch.1)	□ □ axis	□ □ axis	□ □ axis	□ □ axis	□ □ axis	□ □ axis
SW1 Setting value =	SW1 Setting value =0	SW1 Setting value =1	SW1 Setting value =2	SW1 Setting value =3	SW1 Setting value =4	SW1 Setting value =5
Contactor : 0 No contactor: 1	A-V'. V2 A-SP	A-V1, V2 A-SP	A-V1, V2 ASP	A-V1, V2 A-SP	A-V1, V2 ASP	A-V1, V2 ASP
0 MDs-A-cv(ch.2)	0 □ axis	0 □ uis	0 □ axis	0 0 axis	0 □ uio	0 0 axis
SW1		SW1 Setting value =0	SW1 Setting value =1	SW1 Setting value =2	SW1 Setting value =3	SW1 Setting value =4	SW1 Setting value =5
Contactor : 0 No contactor: 1	A-V1, V2 ASP	A-V1, V2 ASP	A-V1, v2 ASP	A-V1, v2 ASP	A-V1, v2 A-SP	A-V1, V2 ASP

Revision

Note			
● ● Do not connect	Main unit order	BW-	-
●—● Connect	Option order	BW-	-
	Order list No.	SSO-	-
	Manufacture No.	S/N	
		SBW-	-

5. Explanation of Hardware

5.1 Outline

An outline of the MELDAS 500 Series operation theory will be explained in this section.
Please refer to Fig. 1.1 'General configuration of system using M500 Series'.
The MELDAS 500 Series is composed of the control unit that can be called the control computer as a base, and the NC operation board and servo mechanism.
The control unit is composed of various control modules (integrated PCBs). The following three modules are mainly used.
The CPU module, is the data processing section that is made up of the main CPU QX141 (composed of the latest 32-bit CPU, memory, programmable controller, various gate arrays, and peripheral IC), SRAM memory QX42□, main cassette memory QX81 □, user PLC cassette memory QX81□, and axis movement control section QX721/QX722.
The CRTC module is the display and control section made up of the graphic control PCB QX524 (including various functions other than display control) for color CRT correspondence, and graphic control PCB QX521 for black and whlte correspondence.
The DIO module is the I/O interface with the machine side.
The NC operation board has various display functions such as the CRT, EL and color LCD and the MDI setting function. The display between the NC operation board and control unit is performed with video signals, and the data is transferred with high speed serial transmission.
The servo mechanism is composed of a full digital servo ampliiier, AC servo motor and position detector. Data is transferred between the full digital servo amplifier and control unit with high speed serial transmission.

To process the data, the CPU reads (fetches) one command at a time of the software (group of commands called the control program) that is read into the memory beforehand. The command is analyzed, executed and processed.
This control program is divided into several programs according to the required emergency of the data processing, and is located in the ROM on the memory cassette QX81□.
The program that is closely related to the hardware and which waits for controls is called the monitor. Many programs (called tasks) run under the control of the monitor, and include the following:
First, the contact input on the machine side, and contact output and command pulse distribution to the machine side must be processed within a set interval. Thus, these have the highest priority. The machine control program that processes these is called motion.
Next, the calculation program that reads the tape command, analyzes the NC command to precalculate the data required for the above process, and that performs interpolation is called the pre-program.
The man-machine interface program that displays data on the CRT setting and display unit, and processes the data input wlth the keys is called the operator controlled program.
If these programs are processed in order, the request for work with a high degree of emergency cannot be satisfied, so each task is given an order of priority, and processes are performed according to this order.
If, during a certain task, a request for processing a task with a higher priority is received, the currently executed task will be interrupted, and the requested task will be executed. If an even higher task is received, that task will be performed first, and when completed, the task interrupted last will be executed. The task interrupted first will be executed last.
The operation flow of the MELDAS 500 Series is as shown in Fig. 5.1 .1.
As can be seen in the flow chart, the MELDAS 500 Series reads in the data on the machine side with the built-in CPU, and makes various judgements according to that data and performs controls.
In the automatic mode, when the CYCLE START button is pressed, the machining program is read in from the memory. If it is a movement command, the movement data for each axis is calculated and output to the servo amplifier.
If it is machine operation data, the data will be output to the power control sequence.

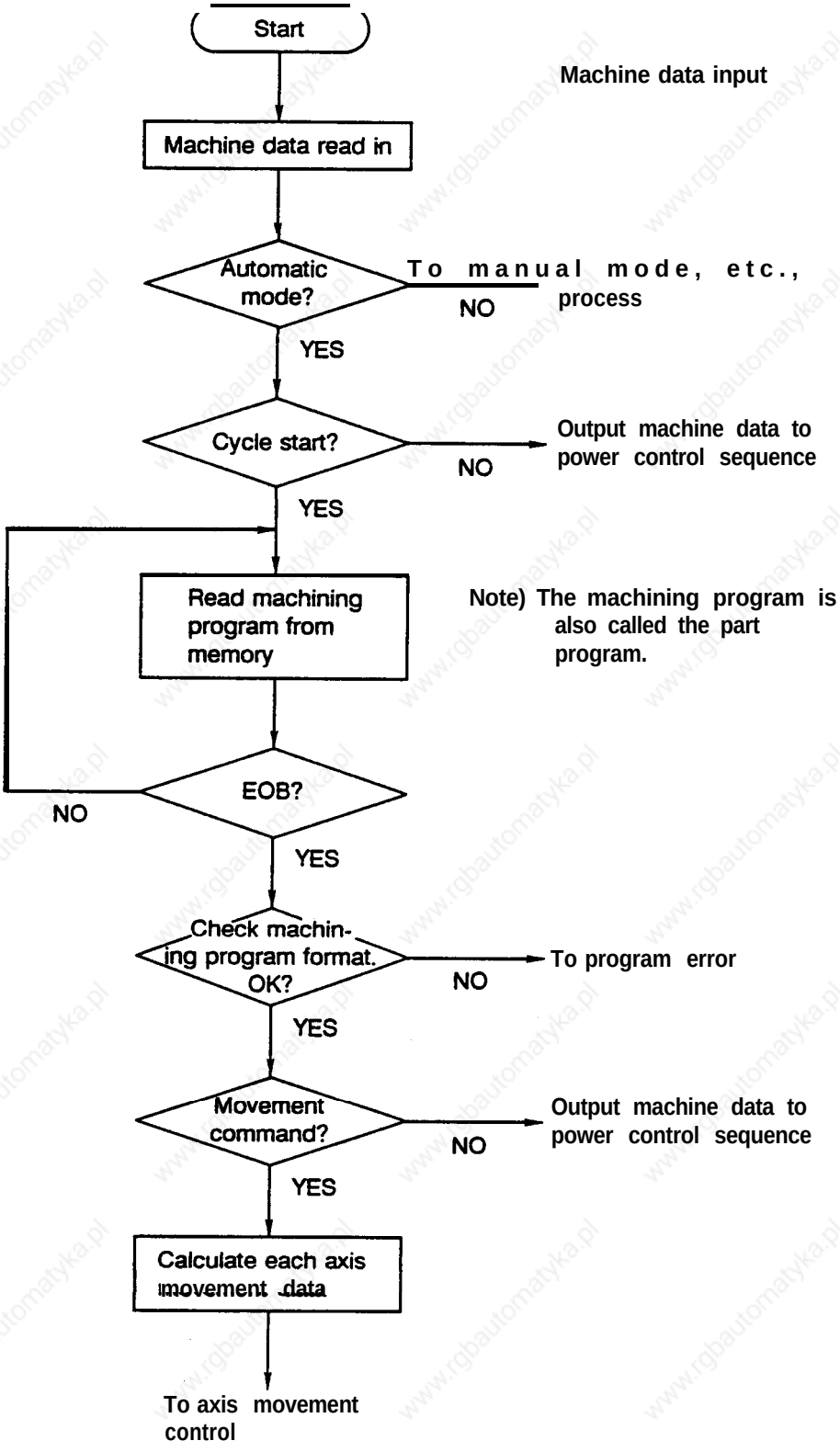

Fig.51 MELDAS 500 Series Operation Flow Chart

CRT setting and display unit key input

When the key switches on the CRT setting and display unit are pressed, the inputs are read into the NC unit with the following route.

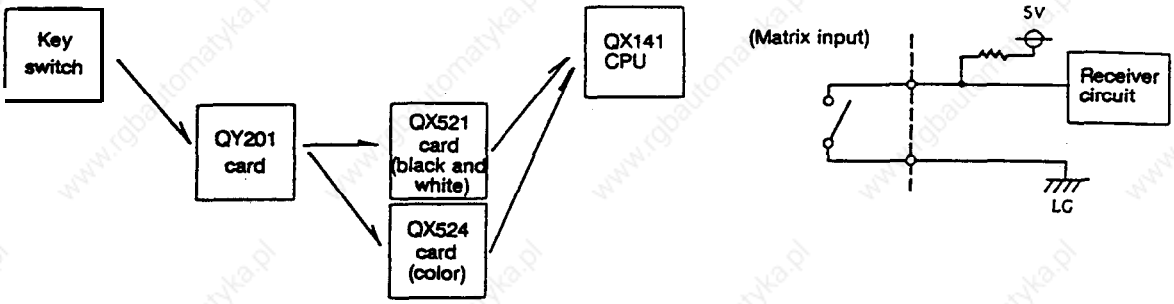

Machine operation board input

In addition to reading in the machine contact inputs of the switches on the machine operation board as explained above, these can be read into the NC with the following route.

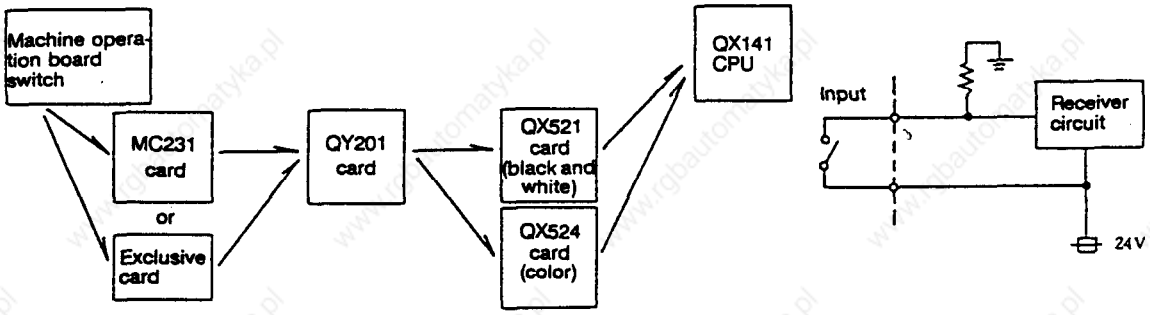

Machine operation board lamp output

The machine operation board lamps (including LEDs) can be lit up with the following route in addition to outputting to the machine side.

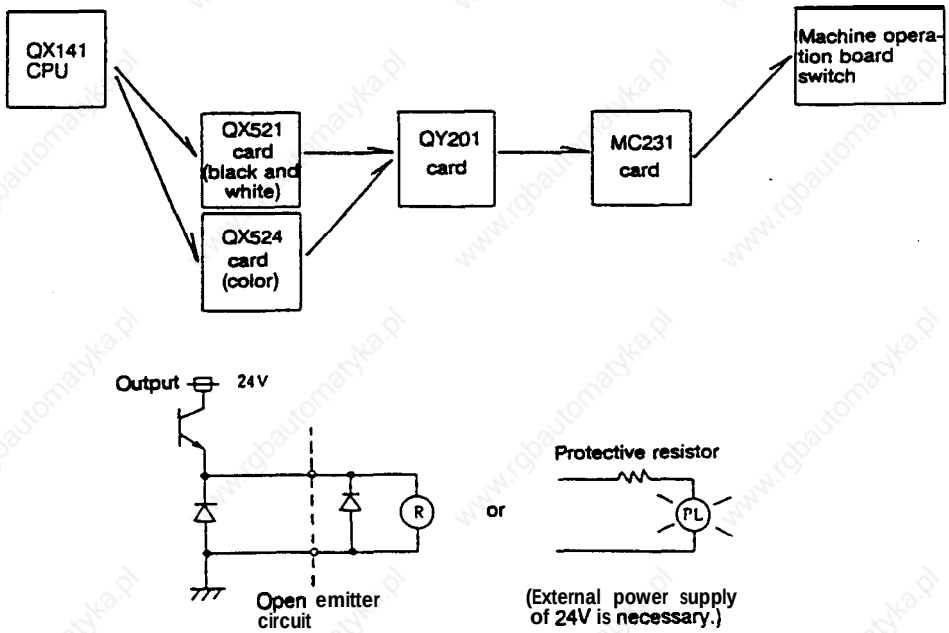

5.2 Flow of Signals

Machine contact input

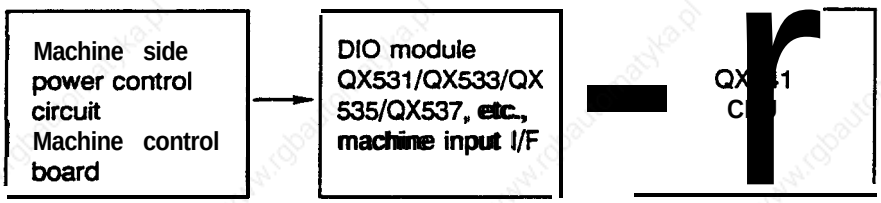

Output to machine side

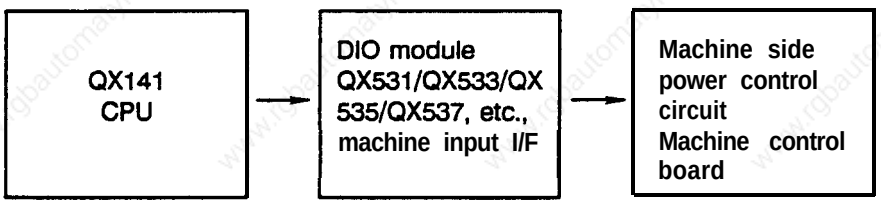

(Note) VDE reoulations
(input circuit: 24V common, output circuit: open emitter (also called source output))

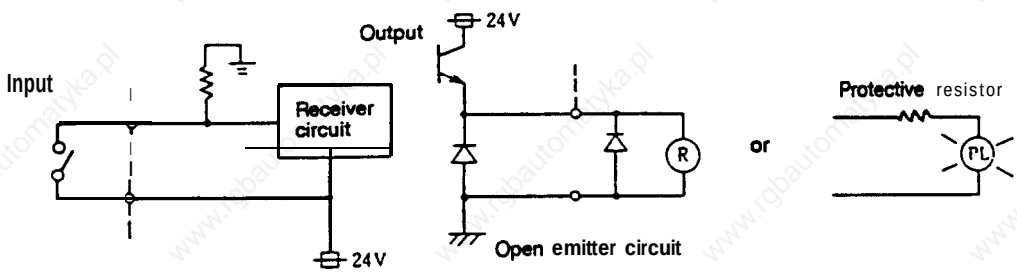

Non-VDE regulations
(input circuit: GND common, output circuit: open collector (also called sink output))

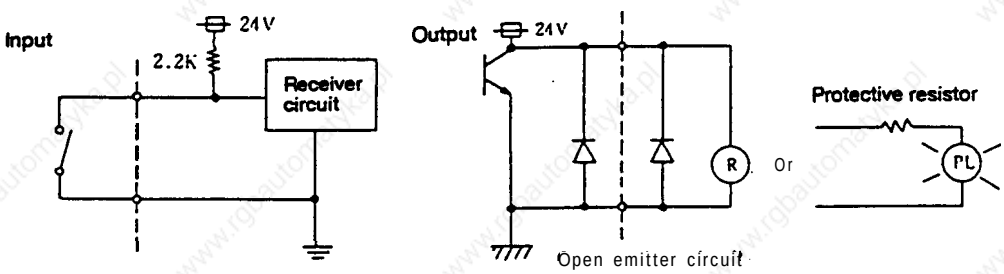

Screen display

Display outputs to a 9 inch CRT or 9.4 inch EL screen is performed with the following route.

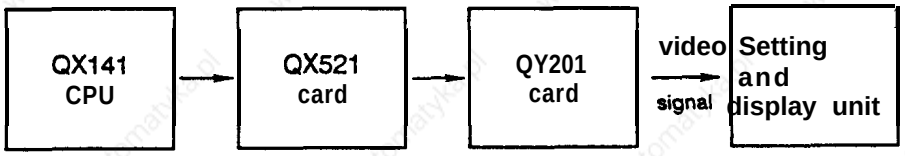

Display outputs to a 14 inch CRT or 10.4 inch color LCD screen is performed with the following route.

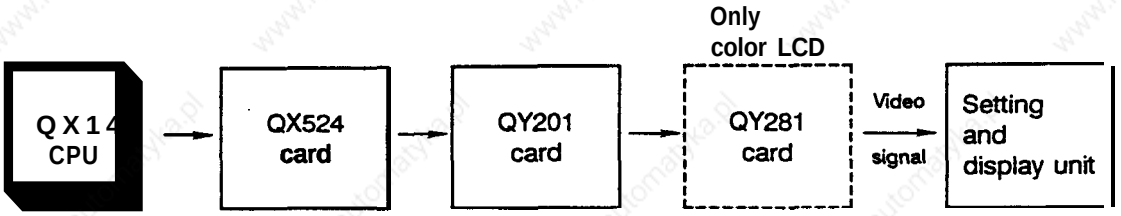

Manual pulse generator (manual handle)

This is used to finely feed the machine table in the manual mode.

One pulse is output with each scale on the manual pulse generator, and 25 pulses are output with one dial rotation (100 pulses when multiplied by four).

The movement amount per scale can be changed to 0.001mm, 0.01mm or O.lmm with the external magnification selection switch.

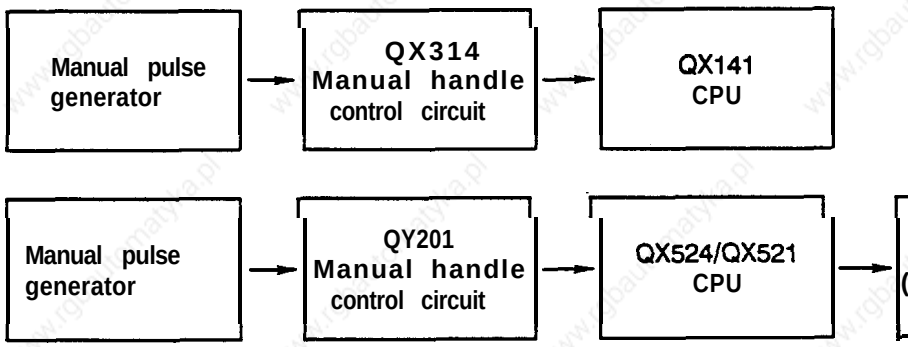

The manual handle's internal circuit is as shown below.

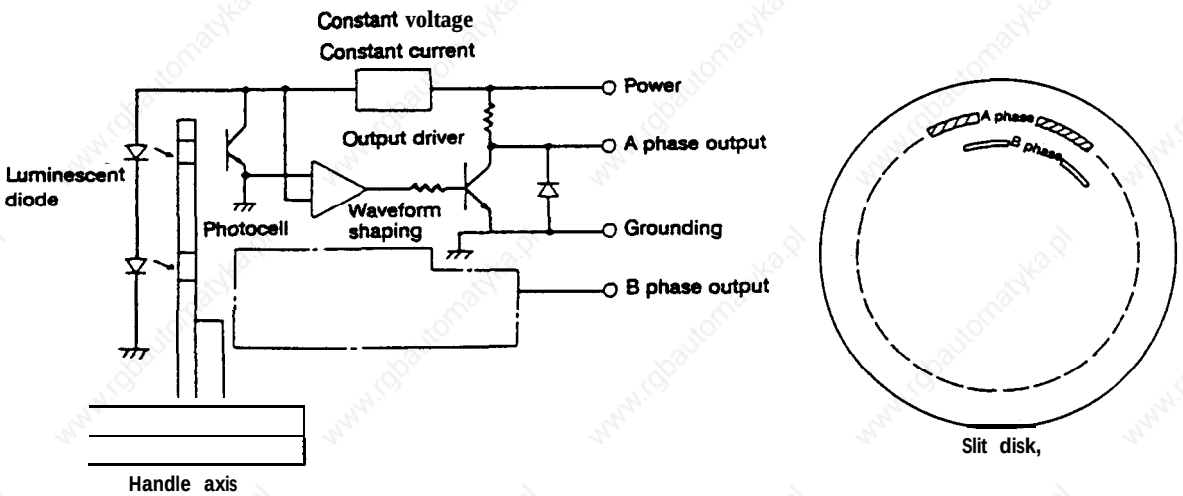

On the slit disk, the A phase and B phase are deviated, and thus, the A phase output and B phase output are deviated by a 90° phase. This phase deviation will be either the A phase or B phase first according to the direction that the disk is rotated. In the MC301/MC201 manual handle control circuit, these are discriminated by phase and discriminated by rotation direction.

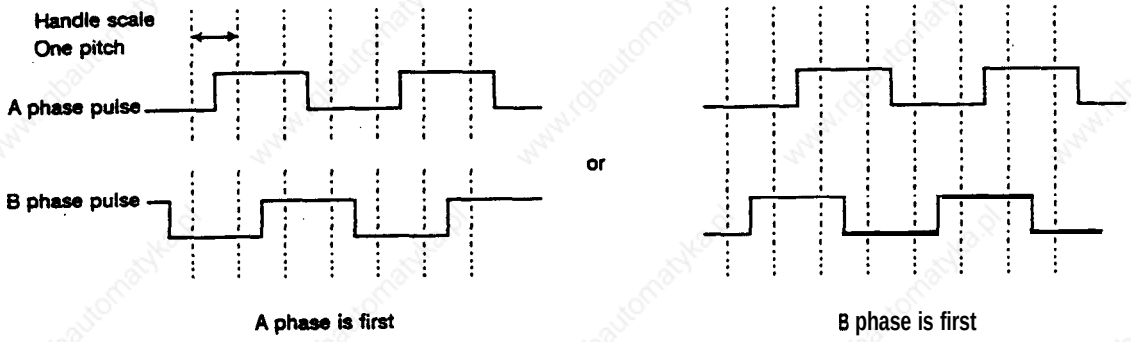

Execution of program and accessing of memory

The route that the CPU uses to fetch the command from the memory is as follows:

1. System program

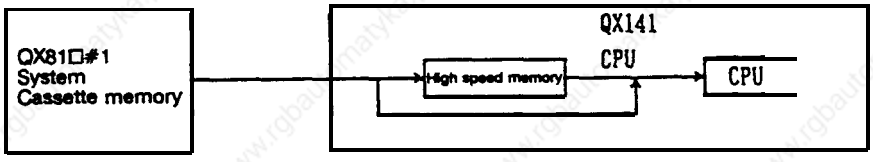

Programs in the cassette memory (system program) on the left side of the CPU module that require high speed processing, are transferred to the high speed memory in the main CPU when the system power is turned on. Thereafter, the commands are fetched from this high speed memory. (The automatic program may also fetch commands from the cassette memory in the module that has a special memory added to ft.)

2. User PLC program

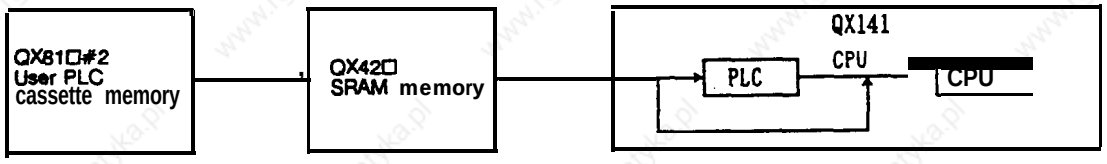

Programs in the cassette memory (user PLC) on the right side of the CPU module that require high speed processing, are transferred to the QX42□ SRAM memory when the system power is turned on. Thereafter, the commands are fetched from this SRAM memory.

When the memory is referred to (read,written) during the command, the data flow will be as shown below.

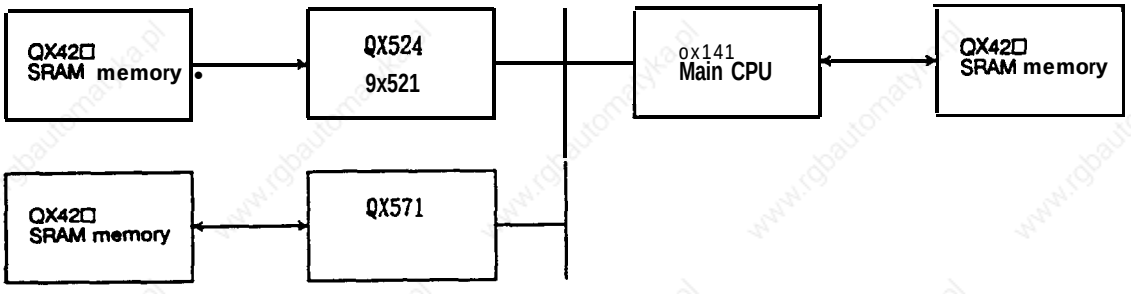

Machining program memory area

If the tape length is short, the machining program will be written into the QX42□ SRAM memory in the CPU module, but if long, the program will be stored in the QX42□ SRAM memory in the CRTC module.

5.3 Control Unit Functions and Handling

The MELDAS 500 Series control unit 4MU301, 4MU401 and 4MU601 is composed of the DC power supply QX084, back panel QX031, QX041, QX061 and various control modules. These are mounted on a compact and lightweight unit.
The configuration of this control unit is shown in the Table of configuration units in section 1.4.
The inside of this control unit is as shown in the Internal system diagram in section 1 .1.2.
The following pages explain the setting of the various configuration elements and adjustment positions of this control unit.

5.3.1 Power supply

QX084

This is the M500 Series control unit's DC power supply. A 5V±12V and 24V DC voltage is created.

Input side

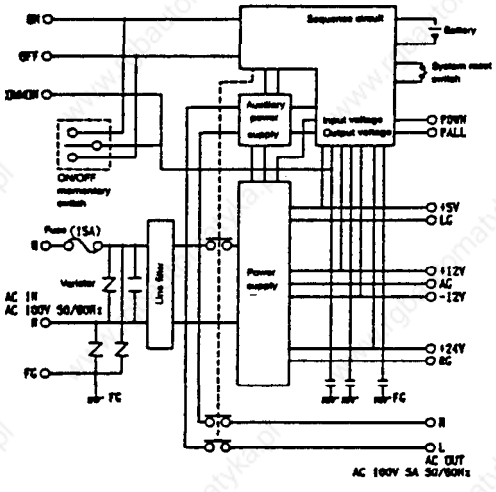

Output

The following values are a guideline for the output performance.

Rated output voltage	+5V	+12V	−12V	+24V
Rated output current	15A	1A	0.5A	2A
Total fluctuation rate	±2% or less	±2% or less	±2% or less	±15% or less
Ripple voltage	50mV or less	60mV or less	60mV or less	200mV or less

AC100 OUT
5A

The power supply QX084 detects under-voltage or temporary stoppage of input voltage and overvoltage, undervoltage and under currents of the output voltage. When detected, the power is automatically turned off.
However, for +24V, the output droops during an overcurrent operation and the power is not turned off. In this case, the power supply LED lamp (red) will light. This LED lamp lights when the input voltage is detected as 85V or less or 130V or higher. Once lit, it will remain lit until the power is turned on.
If the power supply is turned off due to a detection of overvoltage in the output voltage, an error signal will be output in the power supply section and will be held. Thus, the power will not turn on even if the power ON switch is turned on. (Turn off the main MCFB (approx. 2 minutes), and turn on again. The error signal will be released, and the power can be turned on.)

Appearance and connection connectors

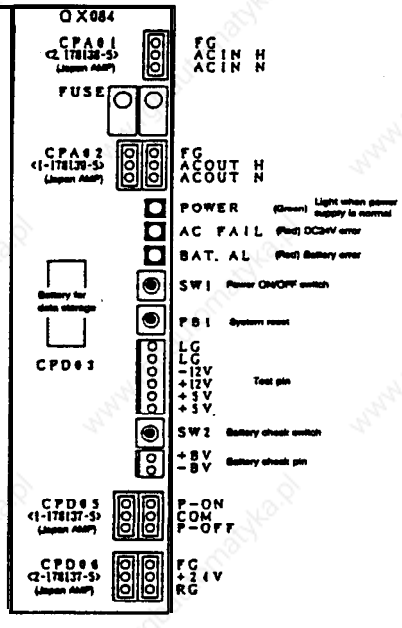

Description of settings and LED

Setting LED	Description	Standard
POWER	Indicates normal power supply when green LED is lit.	Lit
AC FAIL	Indicates that a DC 24V error, AC input overvoltage, or AC input undervoltage has occurred when red LED is lit.	Not lit
BAT-AL	Indicates that battery voltage is 2.6V or less when red LED is lit.	Not lit
SW1	Top: Power ON Bottom: Power OFF	—
PB1	System reset switch (Do not touch)	—

Supplementary explanation

Usage format

1. M500 Series common power supply

Maintenance comment

Causes of input fuse blowing

A protection fuse is mounted on the AC input line in the power supply QX084. The following causes can be considered when the fuse blows.

1. Power capacity for AC OUT output exceeded. (including AC OUT output short circuit)
2. Short circuit of varistor inserted between AC lines.
3. Short circuit of rectifying diode stack in power supply.
4. Short circuit between C and E of the switching transistor in the power supply.
5. Short circuit of rectifying diode stack in auxiliary power supply
6. Short circuit between C and E of the switching transistor in the auxiliary power supply.

53.2 PCB functions and handling

(1) Back panel

QX041/QX061	Appearance and connection connectors	Supplementary explanation
QX031, QX041 and QX061 are used for data communication between the control modules mounted in the control unit.	QX041 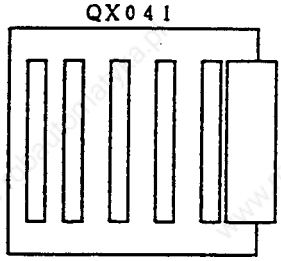 QX061 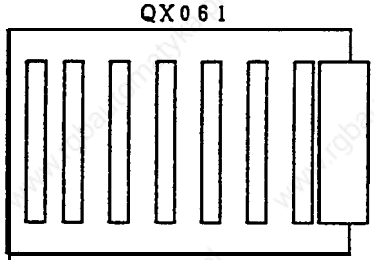	Usage format Maintenance comment

(2) Control PCB

As explained in 5.1 Outline, the M500 Series PCB uses the control module format.
The add-on cards that can be installed onto each control module S-BUS PCB are shown in Table 5.3 Control module combination table. 0 indicates a combination that can be mounted on the hardware, A indicates a combination that can be mounted on the hardware but where the software is not supported currently, and x indicates a combination that cannot be mounted on the hardware.

Table 5.3 Control module combination table

No.	Model name		P-BUS					A-BUS	M-BUS	C-BUS	C'-BUS
	Model name	S-BUS	QX721	QX722	QX731	QX771	QX738	All cards	All cards	All cards	All cards
1	CPU module	QX141/QX141-1	O	O	Δ	Δ	Δ	×	O	O	O
2	CRTC module	QX524/QX521	O	×	O	Δ	O	×	O	×	×
3	DIO module	QX531/QX533/QX535/QX537 QX539	× ×	× ×	× ×	× ×	× ×	O ×	× ×	× ×	× ×
4	Module with special memory	QX571	O	O	Δ	O	Δ	×	O	O	Δ

QX141/QX141-1

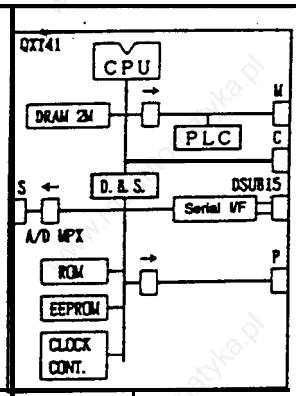

The difference between the QX141 and 0X141-1 is that the QX141 has floating point processing functions and th 0X141-1 does n have this function. The other functions are the same.

Specification item	Specification
CPU	32-bit high speed MPU (QX141 has FPP, QX141-1 does not have PPP)
PLC	LSI that executes high speed sequence processing
EPROM	Monitor ROM
EEPROM	Registers machine characteristic or NC characteristic parameters
DRAM	Dynamic RAM (with parity)
Serial I/O	RS-232 2ch.
Others	Interrupt control circuit CTC (Counter timer) RTC (Clock mechanism). Cassette memory read/write function

Appearance and connection connector

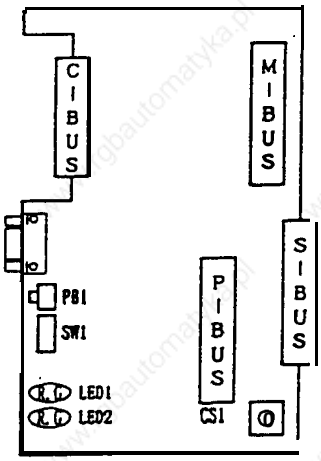

Description of settings and LED

Setting LED	Description	Standard
CS1	Used only for multi-CPU configuration	0
PB1	Software abort switch	
SW1		all OFF
LED1	Watch dog alarm when red LED is lit.	Green LED flicker
LED2	Memory parity error when red LED is lit.	Green LED flicker

Supplementary explanation

Usage format

Use only for CPU module

Maintenance comment

The machine characteristic or NC unit characteristic parameters are registered in the EEPROM the original EEPROM (with socket) must be used when this card is replaced.

QX423/QX424/QX425

The QX42□ can is the SRAM memory card.

Specification item	Specification
SRAM	QX423 512kB (with parity) QX424 1MB (with parity) QX425 2MB (with parity)
Back up	With super capacitor

Appearance and connection connector

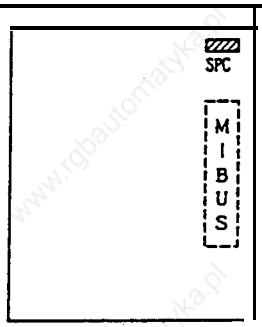

(View from soldered face)

Description of settings and LED

Setting LED	Description	Standard
SPC	ON when backing up SRAM with super capacitor	ON

Supplementary explanation

Usage format

CPU module
(Data, stack area, machining program, user PLCs)
CRTC module
(large capacity memory)
Special additional module
(Data for automatic program, stack area)

Maintenance comment

QX813/QX814/QX815/QX816

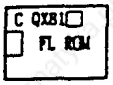

The QX81□ card is a ROM card composed of the flush ROM.

Specification item	Specification
ROM	Flush EEPROM QX813 512kB QX814 1MB QX815 2MB QX816 4MB

Appearance and connection connector

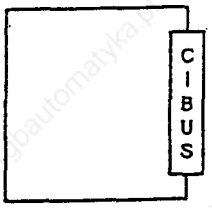

Description of settings and LED

Setting LED	Description	Standard
	No settings or LEDs	

Supplementary explanation

Usage format

1. CPU module on QX141 (System memory)
2. CPU module on QX42□ (User PLC memory)
3. Special additional module (For automatic programs)

Maintenance comments

If a watch dog alarm occurs on the main CPU, this PCB may be defective.
ROM-CUT is possible by this PCB on the actual machine.

QX721/QX722

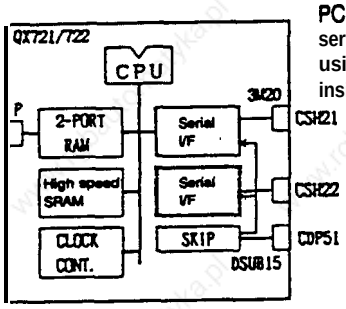

The OX721 and QX722 cards are PCBs for the servo interface using the CPU inside.

Specification item	Specification
CPU	RISC type high speed CPU
High speed SRAM	Code area, data stack area
2-PORT RAM	High speed 2-PORT RAM
Serial I/F	High speed serial I/F with servo amplifier QX721 1ch. QX722 2ch.
Skip input	Sensor input QX721 4 points OX722 8 points

Appearance and connection connector

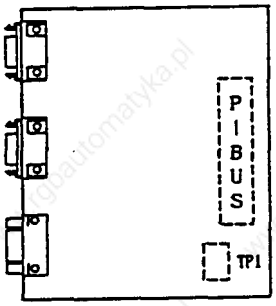

(View from soldered face)

Description of settings and LED

Setting LED	Description	Standard
LED1	Watch dog aiarm for this PCB when red LED is lit.	Not lit
LED2	Software monitor	
TP1	For testing	Off

Supplementary explanation

Usage format

1. CPU module (Normal position)
2. CRTC module (Only OX721 can be mounted.)
3. Expansion MCP module (For axis expansion)

Maintenance comments

1. This PCB is defective when LED1 is lit.
2. If a watch dog alarm for this CPU card (QX141) occurs, this PCB may be defective.

QX521

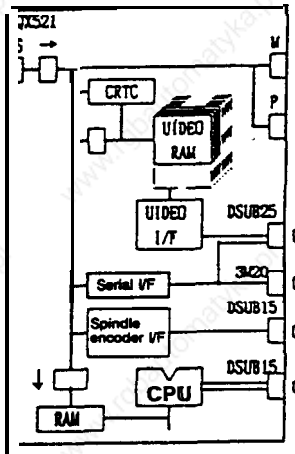

The QX521 card is the graphic display PCB for black and white use.
This card also has the operation board I/F, spindle encoder I/F, and RS-232 device I/F functions.

Specification item	Specification
Display I/F section	For 9 inch black and white CRT, 9.4 inch EL
CRTC	High speed graphic processor
Video RAM	Frame memory (two-sides)
Video I/F	Font ROM (JIS Class 1 standards) Shift register, expansion character I/F
Serial I/F	High speed serial I/F with operation board
IOP section	
CPU	CPU
SRAM	IOP code and stack area
Serial I/F	RS-232 2ch.
Spindle encoder I/F	Spindle encoder (differential) I/F 2ch.

Appearance and connection connector

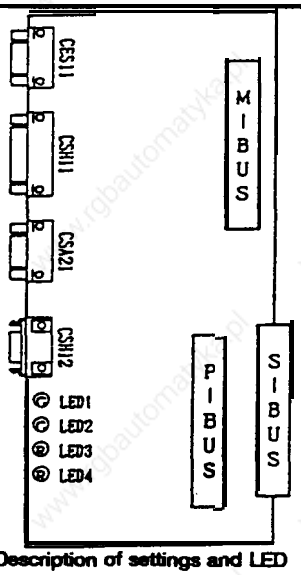

Description of settings and LED

Setting LED	Description	Standard
LED1 (SD)	Communication with operation board when green LED is lit	Lit
LED2 (RD)	Communication with operation board when green LED is lit	Lit
LED3 (FBAL1)	Spindle encoder CH1 no signal when red LED is lit	Not lit
LED4 (FBAL2)	Spindle encoder CH2 no signal when red LED is lit	Not lit

Supplementary explanation

Usage format
Used only for CRTC module

Maintenance comment
When the main CPU (QX141) operates, and trouble related to the operation board such as the key inputs from the operation board are not read or the display does not appear, this PCB may be defective.

QX524

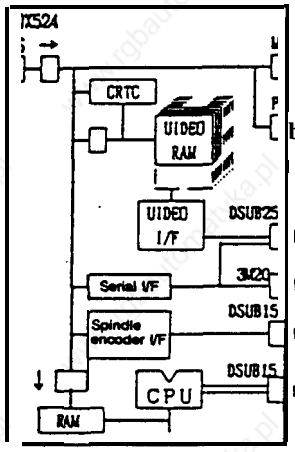

The QX524 card is the graphic display PCB for color use.
This card also has the operation board I/F, spindle encoder I/F, and RS232 device I/F functions.

Specification item	Specification
Display I/F section	For 14 inch color CRT, 10.4 inch color LCD
CRTC	High speed graphic processor
Video RAM	Frame memory (four-sides)
Video I/F	Font ROM (JIS Class 1 standards) Shift register, color pallet
Serial I/F	High speed serial I/F with operation board
IOP section	
CPU	CPU
SRAM	IOP code and stack area
Serial I/F	RS-232 2ch.
Spindle encoder I/F	Spindle encoder (differential) I/F 2ch

Appearance and connection connector

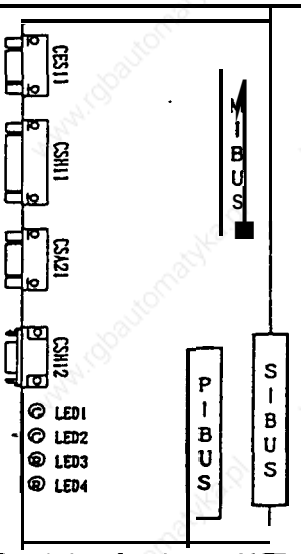

Description of settings and LED

Setting LED	Description	Standard
LED1 (SD)	Communication with operation board when green LED is lit	Lit
LED2 (RD)	Communication with operation board when green LED is lit	Lit
LED3 (FBAL1)	Spindle encoder CH1 no signal when red LED is lit	Not lit
LED4 (FBAL2)	Spindle encoder CH2 no signal when red LED is lit	Not lit

Supplementary explanation

Usage format
Used only for CRTC module

Maintenance comment
When the main CPU (0X141) operates, and trouble related to the operation board such as the key inputs from the operation board are not read or the display does not appear, this PCB may be defective.

QX531/QX533

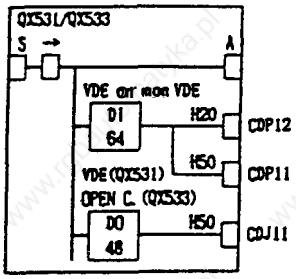

The QX531 and QX533 cards are I/O interface DIO-A PCBs that use Honda connectors. The wmmon wntact input for these two PCBs oan be either the 24V oommon or GND wmmon. The VDE regulation for the QX531 card is contact output. The contact output for the QX533 is an open collector.

Specification item	Specification
Contact input	64-point (Either 24V wmmon or GND wmmon is possible with external connection.)
Contact output	48-point QX531 WE (open emitter) OX533 Open collector

Appearance and connection connector

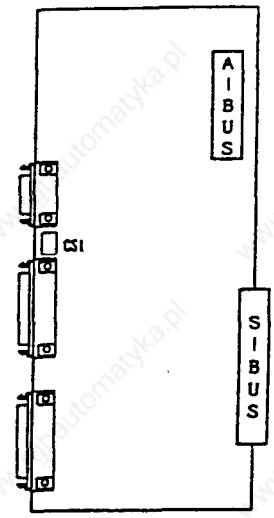

Description of settings and LED

Setting LED	Description	Standard
CS1	This is used for separation when several DIO modules are mounted in the control unit.	1st 0 2nd 2 3rd 4 eto.

Supplementary explanation

Usage format

Used only for DIO module

Maintenance comment

When the contact output is short circuited, the output IC in the PCB may be damaged. Always confirm the connection with a tester, etc., before turning on the NC power.

QX535/QX537

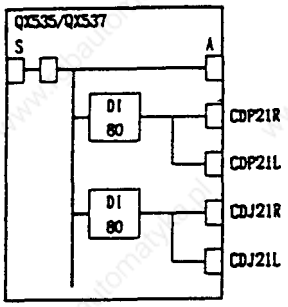

The QX535 and QX537 cards are I/O interface DIO-A PCBs that use flat cable connectors. The wntact input is 24V wmmon for the OX535 card, and GND wmmon for 0x537. However, 32 points can be ohanged over. The WE regulation for the QX535 card is contact output. The contact output for the QX537 is an open collector.

Specification item	Specification
Contact input	80-point QX535: 24V wmmon QX537: GND wmmon (32 points can be changed to 24V wmmon or GND common with external connection.)
Contact output	80-point CM535 WE (open emitter) QX537 Open collector

Appearance and connection connector

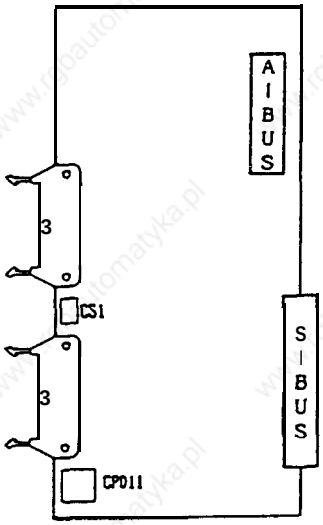

Description of settings and LED

Setting LED	Description	Standard
CS1	This is used for separation when several DIO modules are mounted in the control unit.	1st 0 2nd 2 3rd 4 etc.

Supplementary explanation

Usage format

Used only for DIO module

Maintenance comment

When the wntact output is short circuited, the output IC in the PCS may be damaged. Always confirm the connection with a tester, etc., before turning on the NC power.

QX539

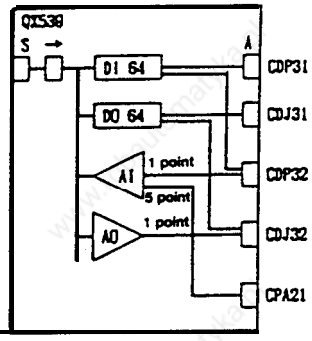

The QX539 card is an i/O interface DIO-A PCB that use a Honda connector. The front surface is completely filled with connectors so an add-on-card cannot be added. Ich of the analog input is input from the front connector, but when 2ch or more are used, a separate connection adaptor is required. In this case, a mounting spaceoftwo slots is required.

Specification item	Specification
Contact input	64-point (24V common)
Contact output	64-point (VDE)
Analog input	B-point
Analog output	I-point

Appearance and connection connector

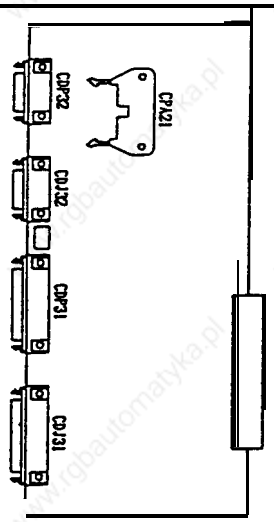

Description of settings and LED

Setting LED	Description	Standard
CS1	This is used for separation when several DIO modules are mounted in the control unit.	1st 0 2nd 2 3rd 4 etc.

Supplementary explanation

Usage format

Used only for DIO module

Maintenance comment

When the contact output is short circuited, the output IC in the PCB may be damaged. Always confirm the connection with a tester, etc., before turning on the NC power.

QX311/QX312

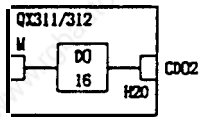

The OX31 1/ QX312 cards are i/O interface DIO-A add-on PCBs that use Honda connectors.
The VDE regulation for OX31 1 is contact output.
The contact output for OX312 is open collector.

Specification item	Specification
Contact output	16-point OX311 ME OX312 Open collector

Appearance and connection connector

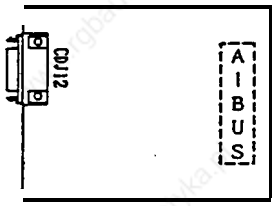

Description of settings and LED

Setting LED	Description	Standard
	No settings or LEDs	

Supplementary explanation

Usage format

Used only for DIO module

Maintenance comment

When the contact output is short circuited, the output IC in the PCB may be damaged. Always confirm the connection with a tester, etc., before turning on the NC power.

QX314	Appearance and connection connector	Supplementary explanation
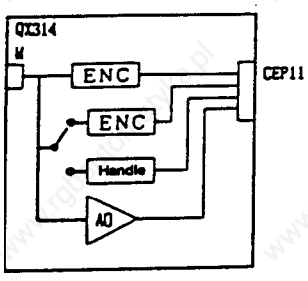 The QX314 card is an add-on PCB for spindle encoder interface and analog output that uses a D-SUB connector.	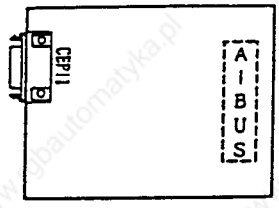	**Usage format** Used only for DIO module **Maintenance comment**

Specification item	Specification
Spindle encoder interface	2-point (loh can be changed with the manual handle)
Analog output	2-point

Description of settings and LED

Setting LED	Description	Standard
	No settings or LEDs	

ax317	Appearance and connection connector	Supplementary explanation
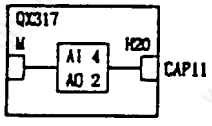 The QX317 card is an add-on PCB for analog input and analog *output that uses* a DSUB connector.	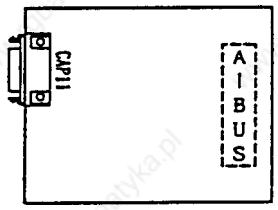	**Usage format** Used only for DIO module **Maintenance comment**

Specification item	Specification
Analog input Analog output	4-point 2-point

Description of settings and LED

Setting LED	Description	Standard
	No settings or LEDs	

QX571

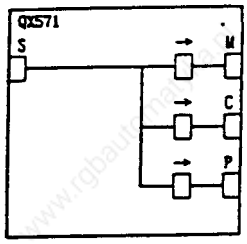

This PCB functions only after the M-BUS PCB, P-BUS PCB and CBUS PCBs are mounted. (This PCB has no functions on its own.)

Specification item	Specification
M-BUS expansion	
P-BUS expansion	
C-BUS expansion	

Appearance and connection connector

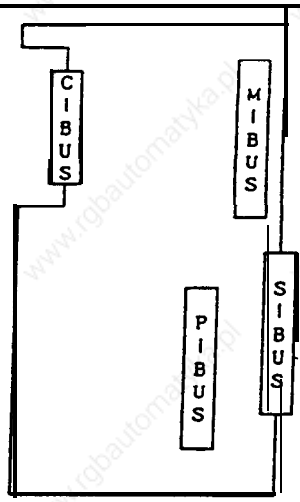

Description of settings and LED

Setting LED	Description	Standard
XIF2	Set to the 2nd PCB when using two of these PCBs.	1st PCB OFF 2nd PCB ON

Supplementary explanation

Usage format

1. Module with special memory
2. Module for axis expansion

Maintenance comment

QX738

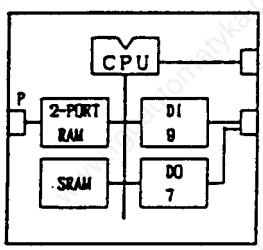

This PCB is used for the M-NET interface that is an interface with the sequencer.

Specification item	Specification
CPU	S-bit CPU
RAM	Code area, data stack area
2-PORT RAM	For communication with main CPU (QX141)
Serial I/F	M-NET (RS-422 multi-drop)
Machine I/O I/F	Machine contact input 9-point (including emergency stop) Machine contact output 7-point (VDE)

Appearance and connection connector

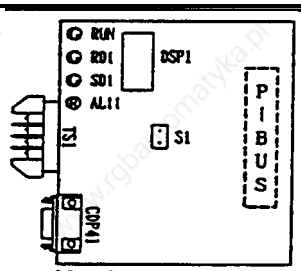

(View from soldered face)

Note 1) The terminating resistor is added to the transmission end and reoeption end of both stations that are connected to the RS-422 interface so that distortion is not generated in the transmission signal waveform. If QX738 is the last station, turn ON, and if not the last station, turn OFF.

Description of settings and LED

Setting LED	Description	Standard
S1	For testing	OFF
DSP1	DSP1-1 ~ DSP1-4 station No. setting DSP1-5 ON 57.6Kbps series OFF 38.4Kbps series DSP1-6 Terminating resistor ON	Station No. Refer to Note 1)
RUN	Software is operating normally when green LED is flickering.	Flicker
RD1	Serial transmission (reception) is normal when green LED is lit.	Lit
SD1	Serial transmission (reception) is normal when green LED is lit.	Lit
ALM	Error has occurred when red LED is lit.	

Supplementary explanation

Usage format

CRTC module

Maintenance comment

When the contact output is short circuited the output IC in the PCB may be damaged. Always confirm the connection with a tester, etc., before turning on the NC power.

OX731

This PCB is for computer linking.

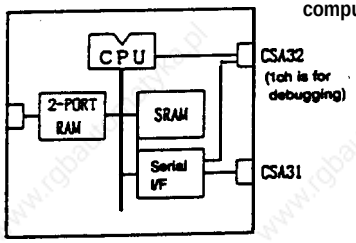

Specification item	Specification
CPU	High speed 16-bit CPU
Serial I/F	2ch (max. 38, 4KBPS)
SRAM	Code area, data stack area
2-PORT RAM	For communication with main CPU

Appearance and connection connector

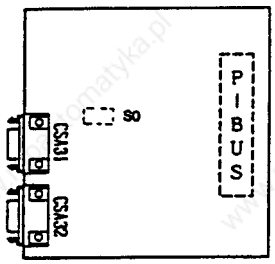

Description of settings and LED

Setting LED	Description	Standard
S0	For testing	OFF

Supplementary explanation

Usage format

1. CRTC module

Maintenance comment

QX771

This PCB is used for interfacing with the data server.

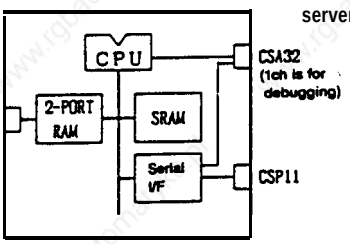

Specification item	Specification
CPU	High speed 16-bit CPU
Data server I/F	1ch (max. 38.4KBPS) Optical link
Serial I/F	1ch (max. 38.4KBPS)
SRAM	Code area, data stack area
2-PORT RAM	For communication with main CPU

Appearance and connection connector

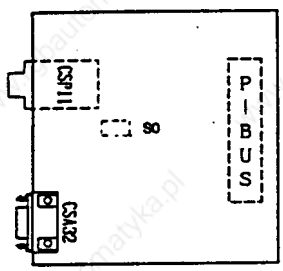

Description of settings and LED

Setting LED	Description	Standard
S0	For testing	OFF

Supplementary explanation

Usage format

1. Module with special memory

Maintenance comment

The optical link module has a life.

5.4 Functions and Handling of the Operation Board

Outline of functions

The operation board is used to input data to the control unit and to display the execution state, etc.

5.4.1 CRT

The MELDAS 500 Series uses a 14 inch color CRT or 9 inch black and white CRT according to the model. These CRTs are open frame type CRTs with built-in AFC for data industries that required a high reliability and high resolution play back. These are compact and light weight, and most of the circuits are integrated on one PCB. The reliability is high, and maintainability is easy so stable operation can be expected over a long period.

14 inch color CRT : Al QA8DSP40/CD1472D1 M2 BKO-NC6542
9 inch black and white CRT: MDT-952-01/MDT-962B-1A BKO-NC6216

Adjustment

There are various positions on the CRT to be adjusted, but these have been adjusted before shipment, so readjustment is not required.

Precautions for use

(1) Affect of magnetic fields

The CRT displays data by scanning an electronic beam with a magnetic field. Therefore, external magnetic fields will affect the display and will cause 'screen distortion', 'screen swaying' and 'color distortion'. Take special care to external magnetic fields.

For example, if the case in which the CRT is stored is made of steel plates, etc., the case will be magnetized if a magnetic stand, etc., is installed. Note that this will cause 'screen distortion.. The CRT is also affected by magnetic fields from motors, transformers and magnetized workpieces.

(2) Cathode-ray tube life

The life of the cathode-ray tube is said to be approximately 7,000 hours.

However, this is the time for the emission efficiency to drop to 70% of the initial value (this will differ according to the tube maker), and does not mean that the tube cannot be used. The phenomenon will be a darkening of the screen, and the CRT can be used continuously.

5.4.2 EL display

The MELDAS 500 Series uses a 640 x 480 dot EL display (Electro Luminance Display). The EL display has an outstanding display class, and is a lightweight, thin and low power consuming display.

EL display: LJ640U48

Precautions for use

(1) EL display life

The EL display life is approximately 10,000 hours/O to 55°C for the brightness to drop 20%. This will depend greatly on the temperature, so keep the ambient temperature as low as possible.

(2) Installation

When installing the EL display in a panel, the heat that is generated by a heat source or shielded product around the display (especially on top and bottom) will build up, and will affect the life. Layout the display so that a convection can be established.

5.4.3 Color LCD

The MELDAS 500 Series uses a transparent type color LCD which is composed of the color TFT-LCD panel (640 x 480), driver IC, control circuit, power supply circuit and back light unit.

10.5' color LCD LQ10D021

Precautions for use

(1) Back light life
The life of the back light is the time that it takes for the brightness to drop to 50% of the initial brightness, which is 10000 hours at 25°C. The life greatly depends on the temperature, so use at room temperature 25°C is the most suitable.

(2) Adjustment
The color LCD's dials and DIP switches have been set to the optimum value before shipment, and thus further adjustment is not required.

(3) Installation
To protect the liquid crystals from ultraviolet rays, avoid leaving the unit in direct sunlight or in strong ultraviolet rays for long periods.

54.4 Floppy disk unit

Refer to section 2.4 Maintenance and Handling of the Floppy Disk Unit.

5.4.5 Replacement of each module in operation board

(A) Replacement of 9 inch CRT standard board PCB

(1) Control PCB

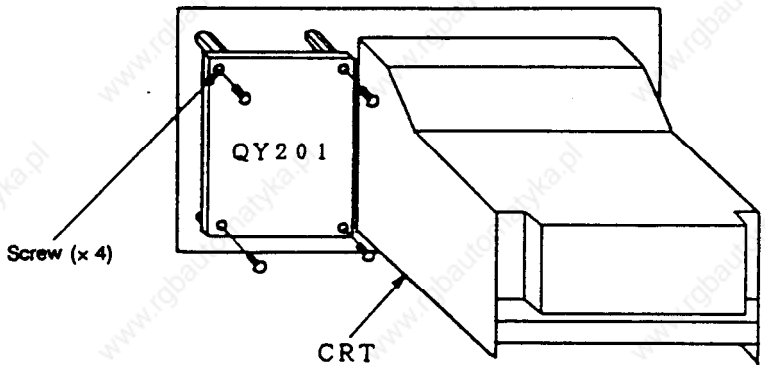

1) Disconnect the cables connected to the PCB.
2) Remove the screws.

(2) CRT

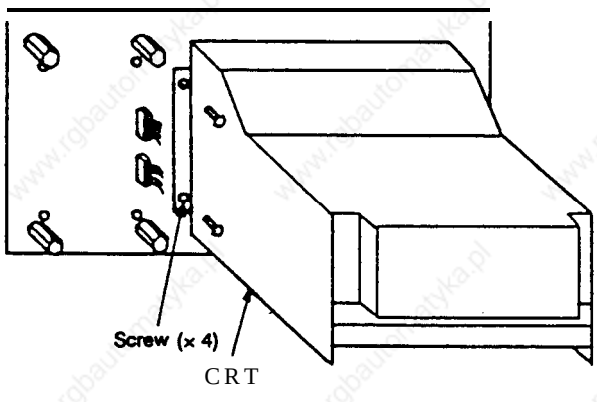

1) Follow procedure (1) 1).
2) Remove the screws fixing the CRT.

(3) Keyboard (data keyboard/menu keyboard)

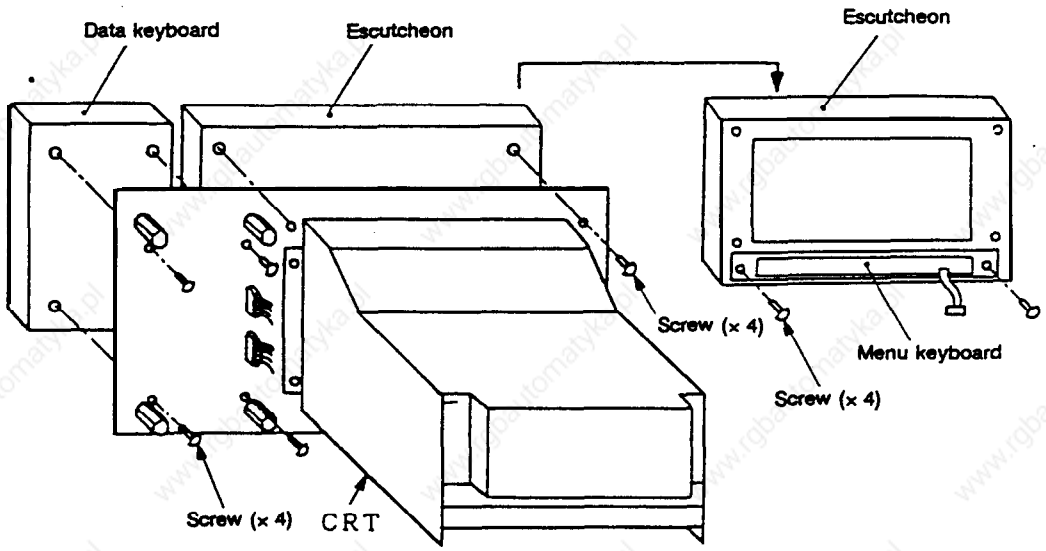

① Data keyboard

1) Follow procedure (1) 1). (Remove board control PCB.)
2) Remove the screws fixing the keyboard.

② Menu keyboard (fixed on escutcheon)

1) After disconnecting the cable, remove the four screws fixing the escutcheon. (The CRT does not need to be removed.)
2) Remove the two screws fixing the menu keyboard.

(B) Replacement of EL standard separated board PCB

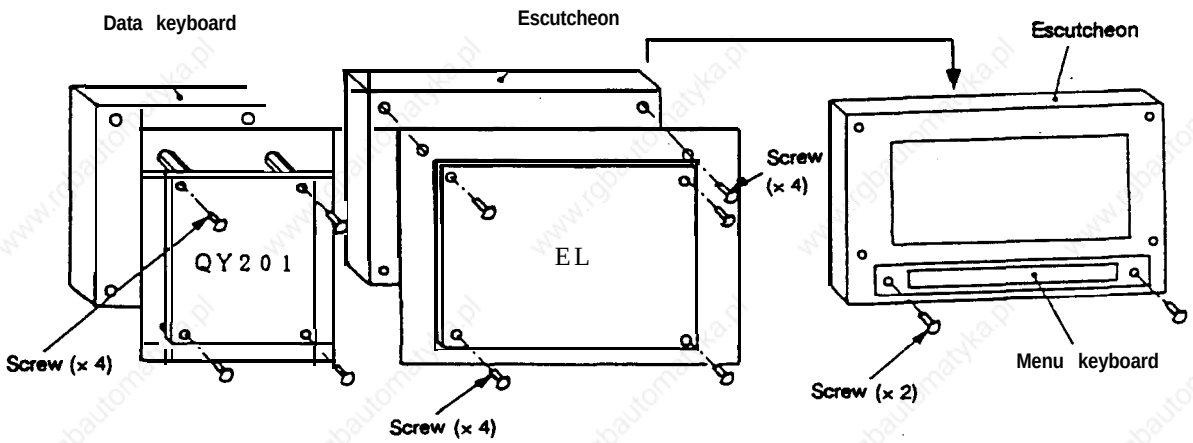

Follow procedures (1), (2) and (3) to remove the control PCB, EL and keyboard.

(C) Replacement of 14 inch CRT standard board PCB

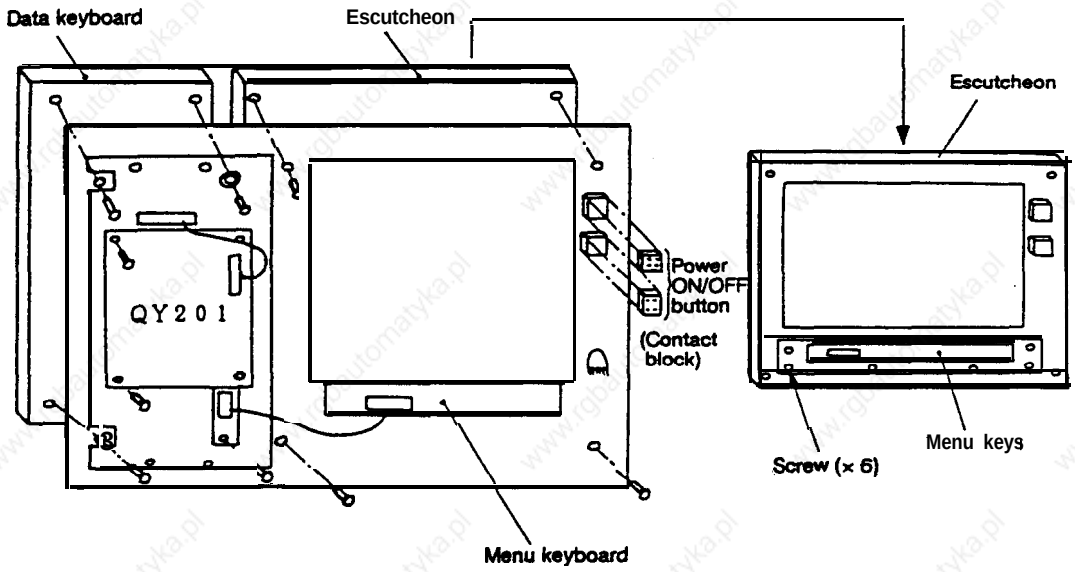

(1) Control PCB

1) Disconnect the cable connected to the PCB.
2) Remove the four screws.

(2) Data keyboard

1) Disconnect the two cables connected to the keyboard PCB.
2) Remove the four screws. (The control PCB does not need to be removed.)

(3) Menu keyboard (fixed to escutcheon)

1) Disconnect the cable.
2) Remove the Power ON/OFF button contact block (wiring side).
3) Remove the four screws and remove the escutcheon.
4) Remove the six screws fixing the menu keyboard.

5.4.6 PCB functions and handling

QY201

This PCB is the PCB for the NC operation board and machine operation board control.

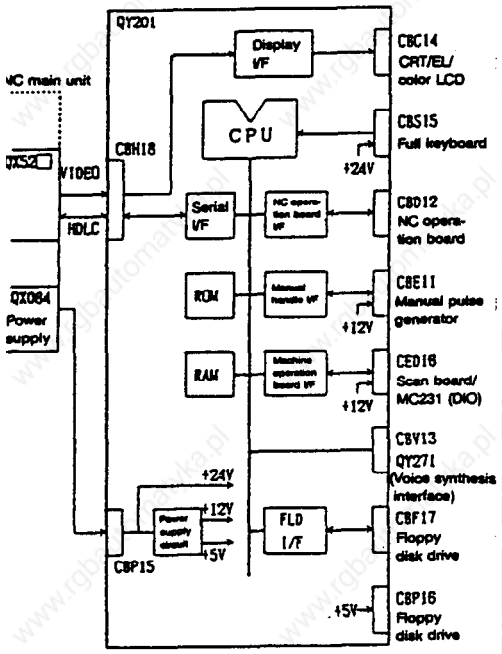

Specification item	Specification
CPU	8bit CPU
ROM	Program area
SRAM	Data stack area
Serial I/F	Transmission/reception with control unit
NC operation board I/F	
Machine operation board I/F	
Manual handle I/F	1ch.
FLD I/F	Floppy disk Max. 2 units
QY271 I/F	QY271 (audio output) installation connector
Control power supply	Conversion from 24V to 5V, 12V

Appearance and connection connector

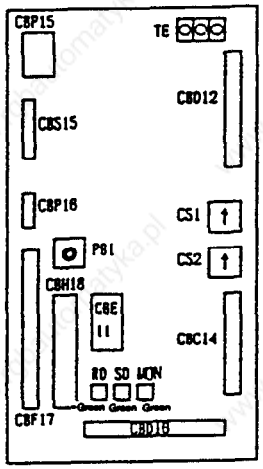

Description of settings and LED

Setting LED	Description	Standard
CS1	For testing	Setting table
CS2	For judgement of operation board type	Setting table
PB1	QY201 reset switch	—
RD	Indicates reception from control unit is normal when green LED is lit.	Lit
SD	Indicates transmission to control unit is normal when green LED is lit.	Lit
MON	Indicates QY201 software operation is normal when green LED is lit.	Flicker

Supplementary explanation

Usage format
1. Standard operation board

Maintenance comments

QY271

This PCB is used for audio output. Audio output is possible by connecting a speaker to the connector.

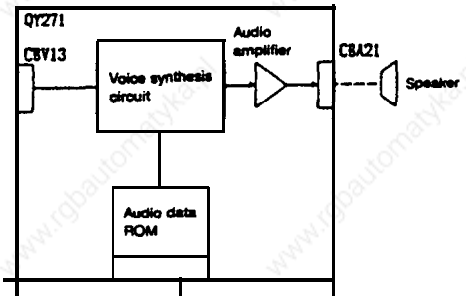

Specification item	Specification
Voice synthesis circuit	Voice synthesis circuit
ROM	Audio data ROM

Appearance and connection connector

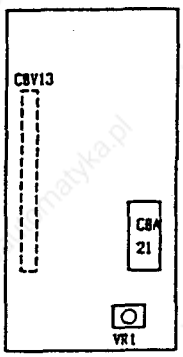

Description of settings and LED

Setting LED	Description	Standard
VR1	Dial for volume adjustment	—

Supplementary explanation

Usage format
1. On QY201

Maintenance comment

MC231

This PCB is used for the input/output of the mechanical switches and lamps, etc., on the machine operation board.

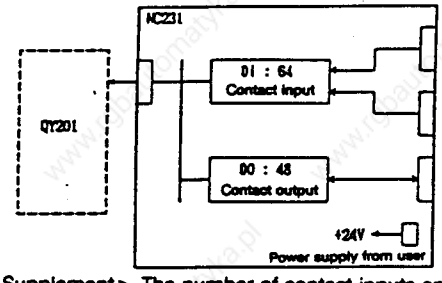

<Supplement> The number of contact inputs and outputs can be doubled by combining two MC231 cards.
DI : 64 + 64 = 128 points
DO: 48 + 48 = 96 points

Specification item	Specification
Contact input	64 points (Both 24V common and GND common are possible with the settings.)
Contact output	48 points (VDE)

Appearance and connection connector

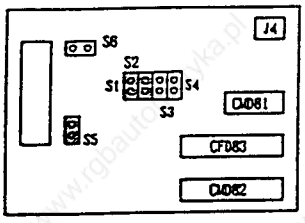

Description of settings and LED

Setting LED	Description	Standard
S1 S2	Set when using VDE selection of contact input.	ON
S3 S4	Set when using non-VDE (GND common) selection of contact input.	OFF
S5	Use when validating emergency stop on the operation board.	OFF
S6	When using two MC231 cards, set for the 2nd card.	—

Supplementary explanation

Usage format
1. Connect with QY201

Maintenance comments
If the contact output is short circuited, the output IC in the PCB may be destroyed, so always confirm the connection with a tester, etc., before turning on the NC power.

QY221

This PCB is used for the NC operation board and SCAN type machine operation board control.

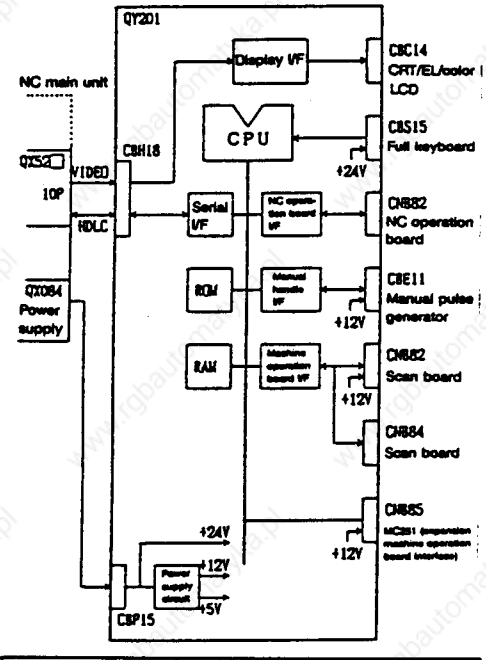

Specification item	Specification
CPU	8bit CPU
ROM	Program area
SRAM	Data stack area
Serial I/F	Transmission/reception with control unit
NC operation board I/F	
Machine operation board I/F	SCAN type machine operation board I/F
Manual handle I/F	2ch.
FLD IF	Floppy disk Max. 2 units
Control power supply	Conversion from 24V to 5V, 12V

Appearance and connection connector

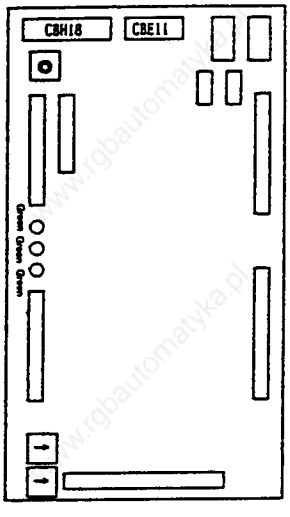

Description of settings and LED

Setting LED	Description	Standard
CS1	For testing	Setting table
CS2	For judgement of operation board type	Setting table
PB1	QY221 reset switch	—
RD	Indicates reception from control unit is normal when green LED is lit.	Lit
SD	Indicates transmission to control unit is normal when green LED is lit.	Lit
MON	Indicates QY221 software operation is normal when green LED is lit.	Flicker

Supplementary explanation

Usage format
1. SCAN type operation board

Maintenance comments

5.5 Functions and Handling of Manual Handle (HD60)

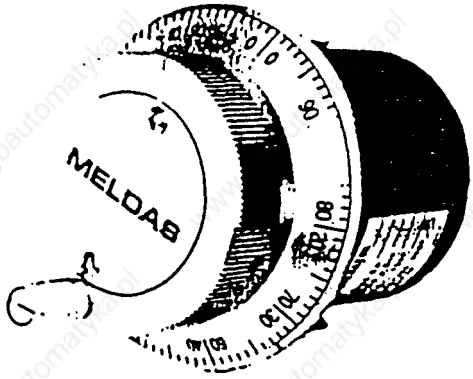

Fig. 5.5 Appearance of manual handle (HD60)

5.5.1 Functions

(1) Outline

The manual handle is rotated by hand, and when rotated, two types of pulse signals are generated in proportion to the rotated angle.

(2) Electrical characteristics

① Input/output terminals

Terminal block No.	Signals
+12V	+12V
ov	ov
A	A phase signal output
B	B phase signal output

② Power

A 12V voltage is required.

③ Signal output

The A phase output and B phase output signals are output, and the following outputs are made according to the handle's rotated angle.

Output waveform and phase relation (When handle is rotated in positive (+) direction)

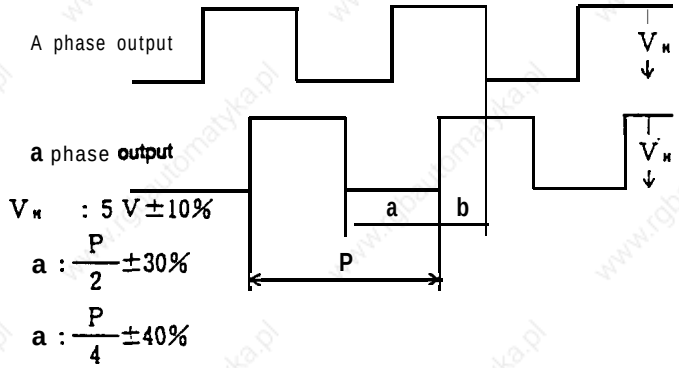

④ Maximum output frequency

100Hz or more

5.5.2 Replacement and handling

If DC12V is impressed, the signals will be automatically output from the A phase and B phase. If the signals are no longer output, the handle must be replaced. (The LEDs on the back will attemately flicker when the handle is rotated.)

Take special care not to mistaken the wiring when replacing the handle. The handle will be damaged if the wiring is mistaken.