XUPK1PANJ45

Dimensions

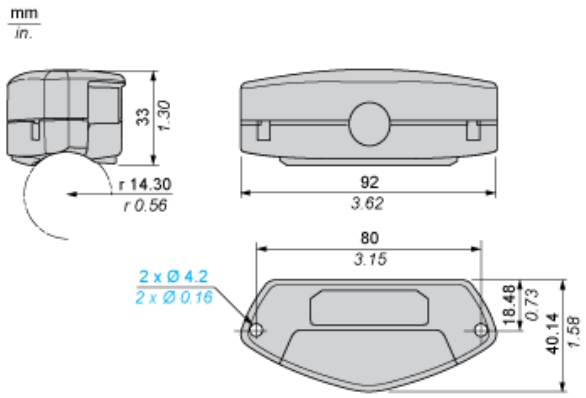

Direct Point to Point Connection to PLC

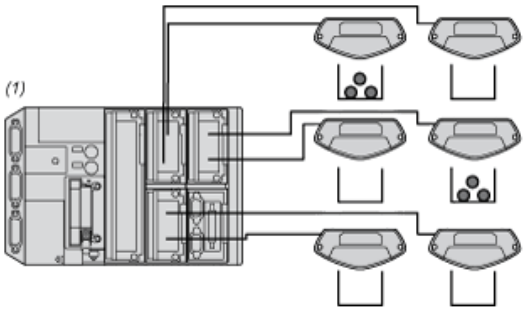

(1) PLC (Programmable logic controller)

Connection for Setup Mode

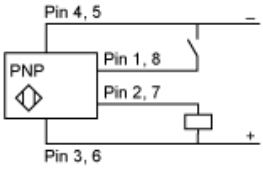
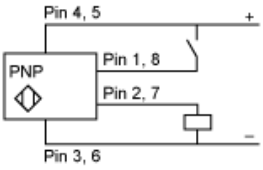
Connection for Operating Mode