TECHNICAL REPORT (MANUAL) No. TMS01/041E

Date. 11-Oct-2001
General Manager of
Servo Laboratory

Specification change in Manual Pulse Generator (MPG)

1. Communicate this report to:

O	Your information
O	GE Fanuc-N, GE Fanuc-E
	FANUC Robotics
	MILACRON
O	Machine tool builder
	Sales agency
	End user

2. Summary for Sales Documents
   This document is to pronounce the specification change in Manual Pulse Generator

3. Notice

4. Attached Document

Drawing NO.	A-56731E-0084

IDE

Original section of issue		
Department Manager	Section Manager	Person in Charge

FANUC

Specification change in Manual Pulse Generator (MPG)

A) Abstract

This document explains about the specification change in Manual Pulse Generator (MPG).

The production of the former specifications written in the table below has been stopped. The new specification on the right side of the table must be used hereafter.

Former specifications	Parts name	Alternative specifications	
A860-0202-T001	MPG	A860-0203-T001	
A860-0202-T002 A860-0202-T003	MPG with plate	A860-0203-T001	note1
A860-0202-T004	Pendant type MPG	A860-0203-T013	
A860-0202-T005	Pendant type MPG	A860-0203-T010	
A860-0202-T006	Pendant type MPG	A860-0203-T011	
A860-0202-T007	Pendant type MPG	A860-0203-T012	
A860-0202-T008	Pendant type MPG	A860-0203-T014	
A860-0202-T009	Pendant type MPG	A860-0203-T015	
A860-0202-T010	Pendant type MPG	A860-0203-T010	
A860-0202-T011	Pendant type MPG	A860-0203-T011	
A860-0202-T012	Pendant type MPG	A860-0203-T012	
A860-0202-T013	Pendant type MPG	A860-0203-T013	
A860-0202-T014	Pendant type MPG	A860-0203-T014	
A860-0202-T015	Pendant type MPG	A860-0203-T015	
A860-0202-T020	Pendant type MPG	A860-0203-T015	note2
A860-0201-T001	MPG	A860-0203-T001	
A860-0201-T002 A860-0201-T003	MPG with plate	A860-0203-T001	note1

Note:

1) The plate is not included in the new specification.
2) The cable is not included in the new specification. The new specification does not declare to be conformed to CE marking.

The MPG used in the unit below also should be changed besides the specification above.

- Machine Operator's Panel
- Machine Operator's Panel (Sub panel)
- Handy Machine Operator's Panel
- Codeless MPG

Please refer to the Specification for Manual Pulse Generator from page 3 for detail.

B) Compatibility

- Mechanical specifications
  - The outer diameter and the dimensions about the attachment of the new MPG to the operator's panel is the same as the former one and it is compatible with the former one mechanically.
  - The length of the projection inside of the operator's panel and the length of the handle is shortened in the new MPG.
  - The handle color for new specification is black only.
  - The handle of the former MPG cannot be attached to the new MPG.

- Electrical specifications
  - The new MPG is fully compatible with the former one electrical I/O interface.

Specification for Manual Pulse Generator

1. **This specification is applied to Manual Pulse Generator, A860-0203-T001 ~.**

2. **Environment Condition for Installation**

	Item	Symbol	Condition		Unit	Remarks
			Min.	Max.		
1	Operating Temperature	T_{OP}	-5	+60		
2	Storage Temperature	T_{ST}	-40	+80	ºC	
3	Operating Humidity	H_{OP}	+30	+90	%RH	No Dewing

3. **Electrical Specification**

1.1 Absolute Maximum Rating

	Item	Symbol	Condition		Unit	Remarks
			Min.	Max.		
1	Input Power Voltage	V_{CC}		7.0	V	at Terminal
2	Output Current	I_{OL}		30	mA	

1.2 Power Supply

	Item	Symbol	Condition		Unit	Remarks
			Min.	Max.		
1	Input Power Voltage	V_{CC}	4.5	5.25	V	at Terminal
2	Consumption Current	I_{CC}		95	mA	

1.3 Output Signal

(1) Phase A and B — Phase difference: 90 ºC

(2) Number of Pulse — 100 pulse/rev.

(3) Scale Selection — Contact signal [1/10/100] (Only A860-0203-T010 ~)

(4) Axis Selection — Contact signal [X/Y/Z/4/5/6] (Only A860-0203-T010 ~)

1.4 Output Signal Level

(1) Manual Pulse Generator

	Item	Symbol	Condition		Unit	Remarks
			Min.	Max.		
1	Output Voltage	V_{OH}	V_{CC} - 0.2		V	$R_L = \infty\ \Omega$
		V_{OL}		0.3	V	$R_L = 200\Omega$

(2) Selection Switch

① Scale Selection Switch

- Selected scale terminal is connected with "COM1".

- Other terminals are open.

② Axis Selection Switch

- Selected scale terminal is connected with "COM2".

- Other terminals are open.

1.5 Input Signal

(1) General purpose LED Signal for "+"

(2) General purpose LED Signal for "-"

1.6 Input Signal Level

(1) Input Voltage LED is turned on when 24V is connected.

(2) Current approx. 10mA

1.7 Connection Terminal

(1) A860-0203-T001

a) "Manual Pulse Generator" (Screw Terminal for M3) View from rear side

+5V	0V	A	B

① [+5V] Power supply
② [0V] Ground for Power and Signals
③ [A] Output for Phase A
④ [B] Output for Phase B

(2) A860-0203-T010 ~

a) "Manual Pulse Generator" (Screw Terminal for M3) View from rear side

+5V	0V	A	B

① [+5V] Power supply
② [0V] Ground for Power and Signals
③ [A] Output for Phase A
④ [B] Output for Phase B

b) "Screw Terminal TB1" Screw Terminal for M3 View from rear side

COM1	x1	x10	x100	COM2	X	Y	Z	4

① [COM1] Common Terminal for Scale Selection
② [x1] Scale Selection for X1
③ [x10] Scale Selection for X10
④ [x100] Scale Selection for X100
⑤ [COM2] Common Terminal for Axis Selection
⑥ [X] Axis Selection for X
⑦ [Y] Axis Selection for Y
⑧ [Z] Axis Selection for Z
⑨ [4] Axis Selection for 4th Axis

c) "Screw Terminal TB2" Screw Terminal for M3 View from rear side

L-	L+	5	6

① [L-] Ground terminal for LED
② [L+} Power Supply terminal for LED
③ [5] Axis Selection for 5th Axis
④ [6] Axis Selection for 6th Axis

1.8 Relationship between terminals and axis

Drawing Number	Terminal Name						LED		Remarks
	X	Y	Z	4	5	6	w/o	with	
A860-0203-T010	X	Z	-	-	-	-		O	
A860-0203-T011	X	Z	C	-	-	-		O	
A860-0203-T012	X	Y	Z	-	-	-		O	
A860-0203-T013	X	Y	Z	4	-	-		O	
A860-0203-T014	X	Y	Z	4	5	-		O	
A860-0203-T015	X	Y	Z	4	5	6		O	

4. Dimensions

4.1 A860-0203-T001 Weight: 200g

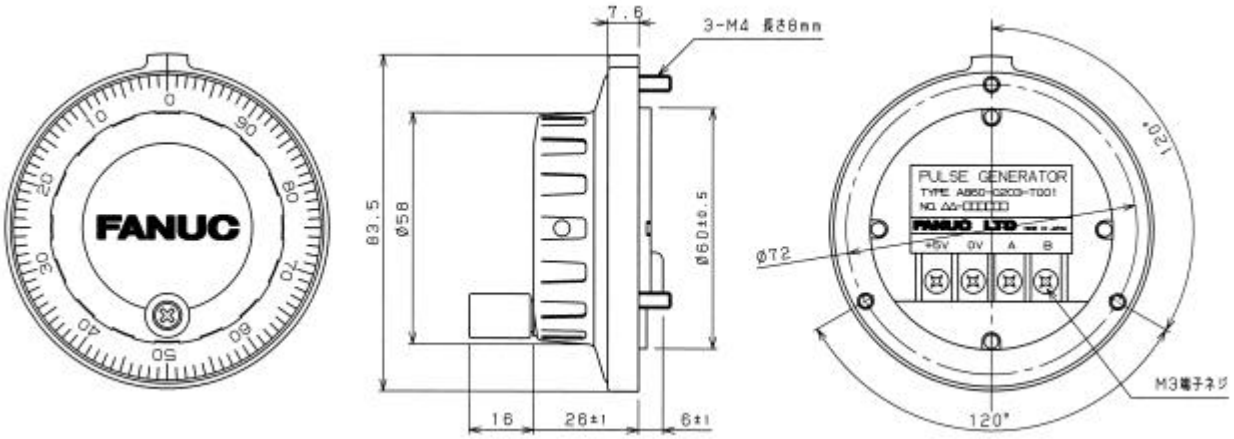
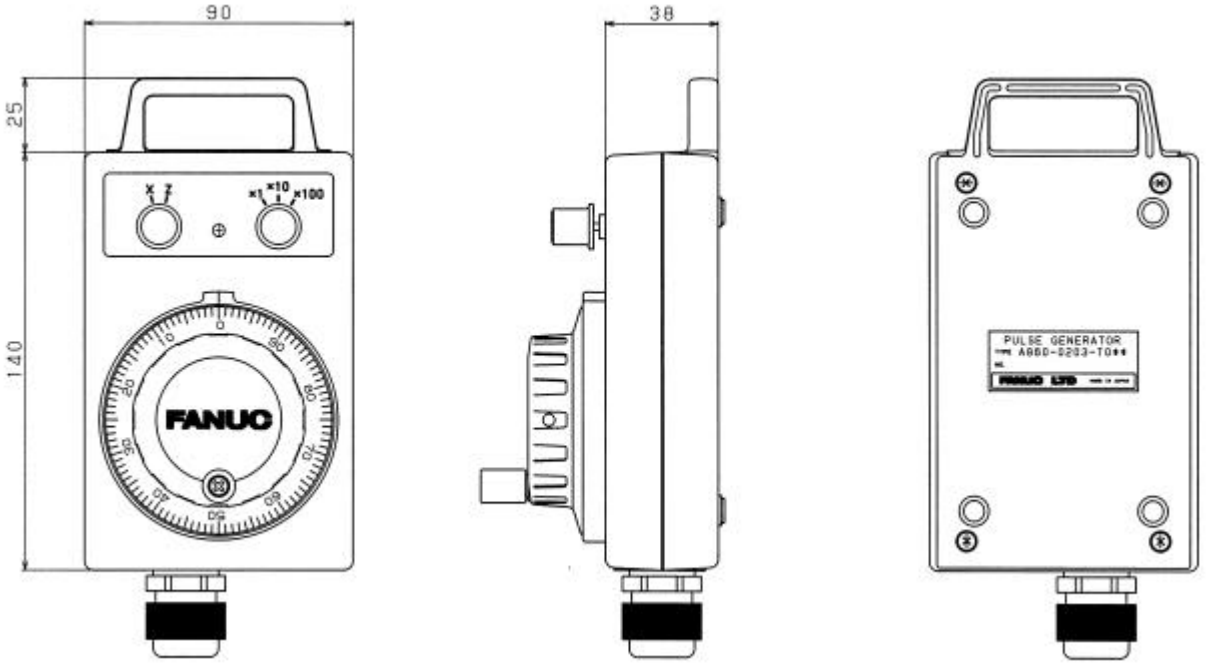
4.2 A860-0203-T010 ~ T015 Weight: 600g