KDA/CDM
AC SPINDLE DRIVE
USER'S MANUAL

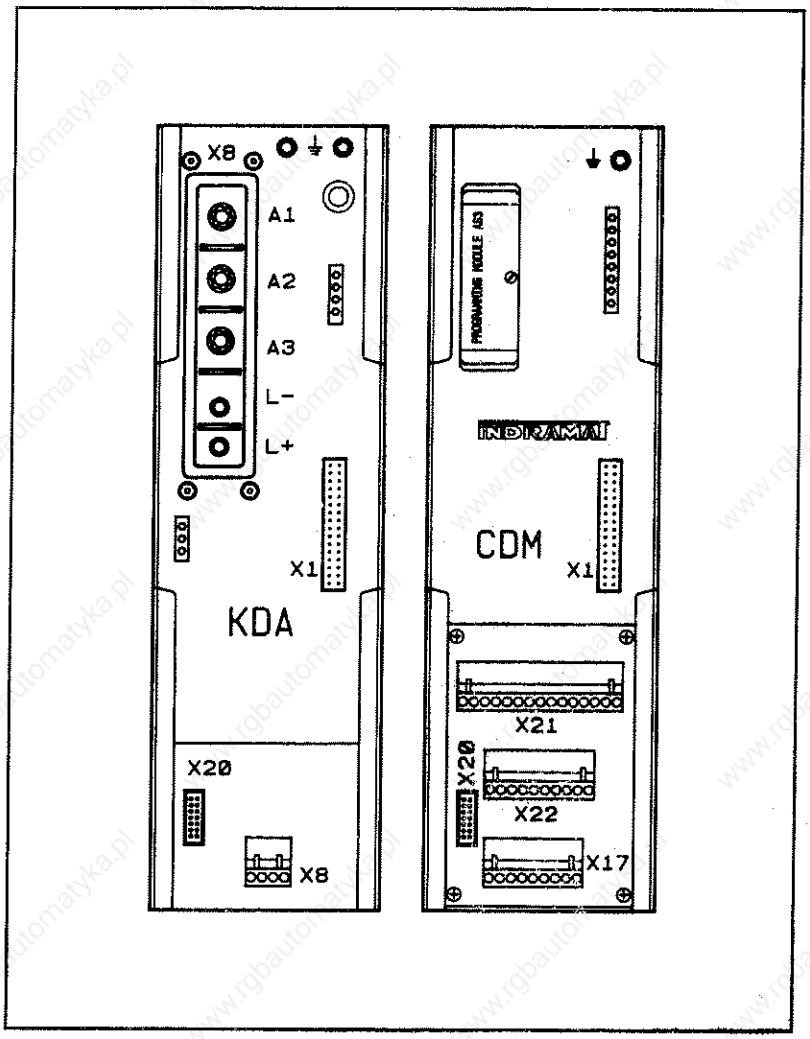

REXROTH
INDRAMAT

NO. IA 74709
REVISION C
FEBRUARY, 1987

Precision Control For Automation

COPYRIGHT (C) 1984, BY INDRAMAT DIVISION, THE REXROTH CORPORATION

PUBLICATION NUMBER IA 74709

REVISION C, FEBRUARY 1987

All rights reserved. No part of this publication may be reproduced, stored in a retrieval system (e.g., in memory, disk, or core) or be transmitted by any means, electronic, mechanical, photocopy, recording, or otherwise, without prior written permission from the publisher.

RECORD OF REVISIONS

Revision Level	Date	Description of Change
--	12/83	Preliminary Edition
A	1/84	Original Release (ADM/CDM)
B	3/86	KDA/CDM 1.3
C	2/87	KDA/CDM 1.4

INTENTIONALLY LEFT BLANK

KDA AC SPINDLE DRIVE USER'S MANUAL

TABLE OF CONTENTS

Paragraph	Title	Page
	CHAPTER 1. GENERAL INFORMATION	
1.1	Introduction	1-1
1.2	System Description	1-1
1.2.1	Power Transformer	1-2
1.2.2	KDV Power Supply	1-2
1.2.3	KDA Asynchronous Drive Module	1-2
1.2.4	CDM Computer Drive Module	1-3
1.2.5	AC SPINDLE Motor	1-3
1.2.6	Overload Detector	1-3
	CHAPTER 2. PARAMETERS	
2.1	General	2-1
2.2	AC SPINDLE DRIVE Parameter Definitions	2-1
2.3	Parameter Group Switching	2-5
2.4	Parameter Entry/Modification	2-5
2.4.1	Parameter Mode	2-5
2.4.2	Display of Software Number	2-5
2.4.3	Display of Parameter's Title	2-5
2.4.4	Editing of Parameter	2-6
2.4.5	Parameter Value Limits	2-6
	CHAPTER 3. FUNCTIONAL DESCRIPTION	
3.1	General	3-1
3.2	Velocity Command Inputs	3-1
3.2.1	Parallel Digital Command Input	3-1
3.2.1.1	Interface Circuits	3-3
3.2.2	Differential Analog Command Input	3-4
3.3	Supply Voltages	3-6
3.3.1	+/-15Vm	3-6
3.3.2	+24Vint	3-6
3.3.3	+24Vext	3-6
3.4	Output Signals	3-7
3.4.1	Ready	3-7
3.4.2	RPM < Minimum RPM	3-7
3.4.3	RPM = Command	3-7

TABLE OF CONTENTS, CONT'D.

Paragraph	Title	Page
	CHAPTER 3. FUNCTIONAL DESCRIPTION, CONT'D	
3.4.4	In Position	3-8
3.4.5	Motor Overtemperature	3-8
3.4.6	Overload Warning	3-8
3.4.7	Overload	3-8
3.5	Input Signals	3-9
3.5.1	Regulator Release	3-9
3.5.2	Run	3-9
3.5.3	Stall Torque Off	3-9
3.5.4	Torque Limit Active	3-10
3.5.5	Integral-Gain Off	3-10
3.5.6	Positioning Commands	3-10
3.5.7	Motor TAS	3-11
3.6	CDM Input/Output Circuits	3-11
3.6.1	Driving CDM Inputs	3-13
	CHAPTER 4. INSTALLATION	
4.1	Device Installation	4-1
4.2	Electrical Connections	4-1
4.2.1	Signal Lines	4-1
4.2.2	Control Voltage Supplies	4-2
4.2.3	Low Voltage Supplies	4-2
4.2.4	Motor Thermal Overload	4-2
4.2.5	Motor Feedback Wiring	4-3
4.2.6	Power Wiring	4-3
4.2.7	Grounding	4-3
4.2.8	Electrical Accessories	4-3
	CHAPTER 5. START-UP	
5.1	Equipment Required	5-1
5.2	Initial Check-Out	5-1
5.3	Initial Start-Up	5-2
5.4	Positioning Check-Out	5-3
5.4.1	Adjustment of Orient Position	5-3
5.5	Ramp Adjustment	5-4
5.6	Diagnostic Mode	5-4
5.7	Programming Mode	5-7

TABLE OF CONTENTS, CONT'D.

Paragraph	Title	Page
	CHAPTER 6. MAINTENANCE & TROUBLE-SHOOTING	
6.1	Maintenance	6-1
6.2	Diagnostics	6-1
6.2.1	Indicators	6-1
6.2.2	CDM Diagnostics	6-3
6.2.3	Individual LCD Messages	6-3
6.2.3.1	PARALOST	6-3
6.2.3.2	UNACCEPT	6-3
6.2.3.3	NO 15V	6-3
6.2.3.4	NO 24VEX	6-3
6.2.3.5	NO POWER	6-3
6.2.3.6	OVERTEMP	6-4
6.2.3.7	NO RF	6-4
6.2.3.8	IN POS	6-4
6.2.3.9	POS ORDER	6-4
6.2.3.10	NO RUN	6-4
6.2.3.11	OVERLOAD	6-4
6.2.3.12	WARNING	6-5
6.2.3.13	STO	6-5
6.2.3.14	I-OFF	6-5
6.2.3.15	N < MIN	6-5
6.2.3.16	N = NCMD	6-5
6.2.3.17	N * NCMD	6-5
6.2.4	Speed Display (N)	6-5
6.2.5	Load Display (M)	6-6
	APPENDIX A. SPECIFICATIONS	
A.1	KDV Power Supply Module	A-1
	APPENDIX B. TYPE NUMBERS	
B.1	KDV Power Supply Module	B-1
B.2	KDA Asynchronous Drive Module	B-3
B.3	CDM Computer Drive Module	B-4

TABLE OF CONTENTS, CONT'D.

Paragraph	Title	Page
	APPENDIX C. PARAMETER LIST	
C.1	AS 2/001	C-1
C.2	AS 2/002	C-2
C.3	AS 2/003	C-3
C.4	AS 2/004	C-4
C.5	AS 2/010	C-5
C.6	AS 2/011	C-6
C.7	AS 2/012	C-7
C.8	AS 2/013	C-8
C.9	AS 2/014	C-9
C.10	AS 2/015	C-10
C.11	AS 2/016	C-11

LIST OF FIGURES

Figure	Title	Page
1-1	AC SPINDLE DRIVE Block Diagram	1-2
2-1	Velocity Profile	2-2
3-1	Parallel Command Input Connections	3-1
3-2	Parallel Command Input Circuit	3-2
3-3	Differential Command Input Connections	3-4
3-4	Location of (P1) Null Adjustment Pot	3-5
3-5	CDM Input/Output Circuits	3-12

LIST OF TABLES.

Table	Title	Page
2-1	Parameter Value Limits	2-7
A-1	KDV Power Supply Specifications	A-1
A-2	KDV Control Voltage Supplies Specifications	A-2

LIST OF DRAWINGS

Title	Drawing Number
Induction Spindle Motor	106-0129-3001-11A
KD - Module mounting with and without blower	109-0574-3004-01A
Cabinet cutout, KD Module	109-0574-3003-01A
KDV Power supply and blower	109-0574-3002-01A
KDS/KDF/KDA 1.X module and blower	109-0575-3003-01A
KDV Power supply outline	109-0574-3001-01A
KDA Spindle module outline	109-0576-3001-01A
KDV/KDA/CDM Interconnect	109-0547-3607-01A
CDM Computer module outline	109-0547-3002-00A
1AD Connection Diagram	106-0129-3140-02A
Inductor GLD12/GLD13	109-0252-4012-00A
Induction motor overload detector	209-0042-4001-00A

CHAPTER 1. GENERAL INFORMATION

1.1 INTRODUCTION

INDRAMAT's AC SPINDLE DRIVE is a high performance asynchronous AC motor speed regulator capable of operating motors up to about 25 hp (kw). Unrestricted four-quadrant operation, as well as positioning, is possible with the AC SPINDLE DRIVE. Speed range is from 0 to 8000 RPM. The AC SPINDLE is provided with one of the following interfaces, allowing operation by any control system:

- Differential Analog Command Input
- 16 bit Parallel Digital Command Input

Speed control is highly accurate, benefiting from a microprocessor based digital velocity loop, rather than conventional variable frequency control. When the digital velocity command is employed, no drift is present. Use of the analog velocity command reduces the precision of the speed control proportional to the analog tolerance, and drift may be present. At zero speed, considerable stiffness is present. The motor will resist any attempt to change its speed thru load variation providing up to the peak system torque, if required.

The control principle used provides the highest stiffness and stability known for standard induction motors. The system is well suited for spindle velocity control but does not approach the stiffness and stability known from INDRAMAT AC SERVO DRIVES. Speeds may be utilized down to zero RPM, but the lowest usable speed depends ultimately upon the load variation present.

The AC SPINDLE DRIVE has been designed so that it may be operated along with Indramat modular AC SERVO controllers, sharing a common power supply. This allows a complete brushless machine to be constructed at a very reasonable price.

1.2 SYSTEM DESCRIPTION

The AC SPINDLE DRIVE is composed of the following components:

- Three-Phase Power Transformer
- KDV Modular Power Supply
- KDA Asynchronous Drive Module
- CDM Computer Drive Module
- AC Asynchronous Spindle Motor with Feedback

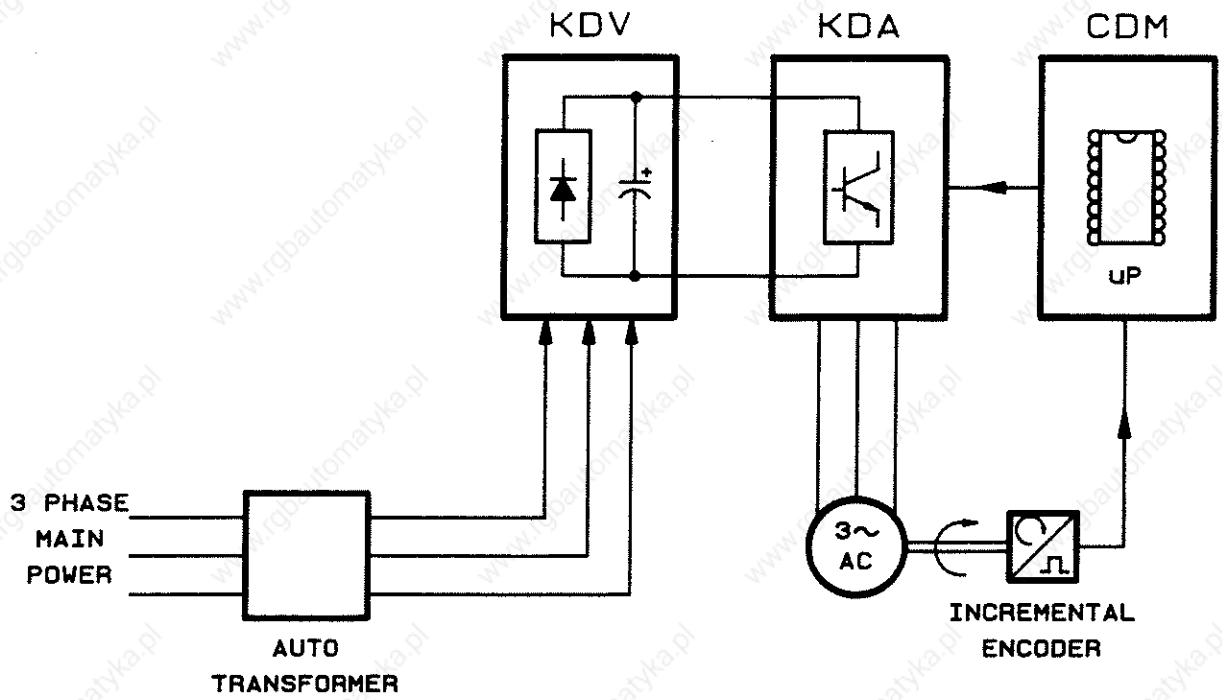

FIGURE 1-1. AC SPINDLE DRIVE BLOCK DIAGRAM

1.2.1 Power Transformer

A 3-phase auto transformer is used to adapt the line power to the 220 VAC required by the KDV power supply. The power required from the transformer is equal to about 1.4 times the power of the drive system. This transformer may also be used to power Indramat AC SERVO controllers.

1.2.2 KDV Power Supply

The KDV modular power supply is used to convert the three phase 220 VAC input voltage to a DC bus voltage, which in turn is used to power the AC SPINDLE motor. Also included in the KDV are low voltage supplies for the various logic sections of the drive system and circuitry to dissipate excess energy returned to the AC SPINDLE DRIVE package when decelerating the motor. Note that the KDV may also be used to power Indramat modular AC SERVO controllers for axis control, the quantity dependent upon the total power required.

1.2.3 KDA Asynchronous Drive Module

The KDA Asynchronous Drive Module contains the power bridge used to convert the DC bus, provided by the KDV, to a rotating 3-phase power supplied to the AC SPINDLE motor. Circuitry is also on board the KDA to accept current commands from the CDM module, to determine how much power to supply to the motor, and to which phase.

1.2.4 CDM Computer Drive Module

The CDM Computer Drive Module contains all the logic necessary to receive velocity commands, compare them with actual speed values obtained from the incremental encoder, and convert the result into a current command for the KDA. The CDM also monitors such things as slip and rotor position and incorporates algorithms to compensate for them. Using a microprocessor rather than conventional analog circuitry normally associated with velocity loop systems, the CDM provides very stable, predictable operation without the need for adjustments. The CDM adapts to the various AC SPINDLE motors available by means of software parameters entered at the factory. These software parameters are stored in the programming module, which utilizes EEPROM memory to store the parameters. By using this type of memory, parameters are not lost in a power loss condition. The parameters may be altered in the field to tailor the operation of the AC SPINDLE drive to any application by using the 5 key keypad with the 8 character LCD display. The display outputs English diagnostic messages, motor RPM, motor load and the parameters.

The CDM also provides outputs to indicate faults, overload conditions, etc. Inputs are available to position the spindle motor shaft at two different points, 180 degrees apart, for use in spindle orient or similar functions.

1.2.5 AC Spindle Motor

A standard asynchronous 3-phase AC induction motor, with an incremental encoder mounted to it, is used as the AC SPINDLE motor. The incremental encoder provides rotor speed and position information to the CDM, used in determining current values, and for spindle orient. The motor is supplied with an air-over external blower assembly, to allow unrestricted operation of the motor from zero to maximum speed. Use of the blower also increases the torque available from the motor by more than 50%.

1.2.6 Overload Detector

AC SPINDLE motors provided by INDRAMAT have a thermistor mounted in them to detect an overtemperature condition. This thermistor is interfaced to the CDM by means of an overload detector, mounted in the control cabinet near the spindle drive package. The overload detector in versions that will operate from either 110 or 220 VAC provide a normally closed contact as an output that will open when an overtemperature condition occurs. On the top of the overload detector is an LED that will illuminate whenever an overtemperature condition has occurred. Two push-buttons are also present on the top. Pressing PR will test the detector, causing the contact to open (indicating an overtemperature condition). R is used to reset the detector after either an overtemperature condition has occurred, or the PR button has been pressed.

CHAPTER 2. PARAMETERS

2.1 GENERAL

The AC SPINDLE DRIVE is adapted to various motors and applications by means of parameters stored in EEPROM located on the AS2 personality module plugged into the front of the CDM. When the AC SPINDLE is purchased from INDRAMAT complete with an AC motor, the correct motor parameters and general application parameters (e.g. ramps) will have already been entered into the CDM and immediate operation is possible. If parameter changes are desired, they can be altered by the keypad on the front of the CDM module.

Two complete sets of parameters are stored in the CDM. The first set (P00 - P24) is used on power up, the second set (Q00 - Q24) is addressed by bringing terminal X22-10 high.

This second set of parameters will allow systems to be optimized for different gear ratios which in the past has required tuning the system for worst case and accepting less than optimum performance in other ratios.

A parameter list is included in the appendix of this manual for each motor/controller combination. This list shows each parameter, the value programmed into the CDM EEPROM at the factory, and the programming range of that parameter. For example, the parameter for maximum RPM may be shown as:

P00 Maximum RPM 6000 (1000-6999) RPM

This means that parameter 00, which defines the maximum RPM of the spindle motor, has an initial value of 6000 RPM (programmed into the CDM at the factory, but may be altered in the field to any value between 1000 and 6999 RPM.

2.2 AC SPINDLE DRIVE PARAMETER DEFINITIONS

Parameter Number	Definition
P/Q 00	MAX RPM -- Defines the maximum speed the spindle motor will operate at, with maximum command input. If the CDM is equipped with the differential analog command input, this parameter will also define the speed the spindle will run with a 10 VDC command. If the CDM is equipped with the parallel digital command input, and a speed value greater than this parameter is input, the motor speed will be limited to this parameters value. The maximum RPM may be altered in the field, as long as the value falls within the range specified in the Parameter List.
NOTE:	Do not exceed the speed rating on the motor nameplate!!!
P/Q 01	MIN RPM -- This defines the breakpoint RPM that the output 'STALL', terminal strip X21 terminal 14, is turned on and the display N<MIN is shown. This occurs if the commanded speed, or the actual motor speed, is less than this parameter's value. This parameter maybe programmed as needed in the field, but should not be set to a value lower than required. Too low a value will cause erratic function (dithering) of the 'STALL' output, due to small position corrections occurring on the motor shaft at zero speed.

P/Q 02 MAX DEV -- Defines the 'window' in RPM, of the output signal N=COMMAND (N=CMD). This signal, used for 'at speed' indication, will turn on if the difference between the commanded and actual speed is less than or equal to the MAXIMUM DEVIATION. MAXIMUM DEVIATION may be programmed to suit the application. As in parameter P/Q 01, parameter P/Q 02 should not be programmed any lower than required, otherwise dither can occur in the N=CMD output. Additionally, if the controllers integral-gain is disabled by means of the I-OFF input, the N=CMD signal may be unattainable with a load on the motor shaft.

P/Q 03 RAMP 1 -- The INDRAMAT AC SPINDLE DRIVE provides the user with parameters that allow 3 different ramp rates. Each ramp is active between two speeds. The ramp 1, 2 and 3 is active during acceleration. Ramp 2 and ramp 3 is active only during deceleration. The velocity profile of the spindle motor is as follows:

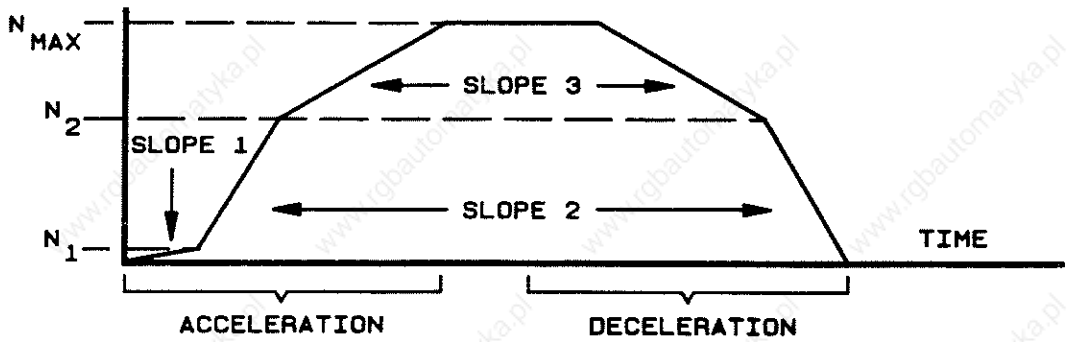

FIGURE 2-1. VELOCITY PROFILE

Slope one (Parameter P/Q 03) is active between zero speed and RPM N1, defined in parameter P/Q 04. If N1 is set to the maximum RPM of the system, slope one will be the only ramp used between zero and top speed. Normally slope one is used to reduce accel rates near zero speed to 'soften' forces on the spindle drive train during starts, and direction reversals. Parameter P/Q 03 defines this ramp rate, in rad/sec^2.

P/Q 04 RPM 1 -- Defines the upper limit of slope one, specified in parameter P/Q 03. This parameter is programmed in RPM. Refer to P03's description for more information.

P/Q 05 RAMP 2 -- Defines slope two of the accel/decel profile. This ramp, programmed in rad/sec^2 is active between RPM 1 (P/Q 01) and RPM N2 (P/Q 06) on accel, or is active between RPM N2 (P/Q 06) and zero speed on decel's. Slope two can be used to produce a higher ramp rate than that set in P/Q 03, usable up to the base speed of the motor.

P/Q 06 RPM 2 -- Defines the upper limit of slope two (P05). This parameter is normally set equal to the base speed of the motor, so that a high ramp rate can be utilized within the constant torque range of the spindle motor.

P/Q 07 RAMP 3 -- Defines slope three, active from RPM N2 (P/Q 06) to maximum RPM (P/Q 00) on accels, or from MAX RPM (P/Q 00) to RPM N2 (P/Q 06) on a reduced rate in the constant horsepower range (from base speed to maximum speed). Units are rad/sec^2.

P/Q 08 SMOOTH -- Defines the amount of filtering that will be applied to the analog velocity command input. The input is read every 4 msec, the actual command used will be an average of the last 2^n samples where n is the value entered n this parameter. For pure DC velocity commands, no filtering is required (P/Q 08 = 0), for applications where the velocity command is supplied directly from a D-A converter, varying amounts of filtering may be used (to a maximum of P/Q 08 = 7). This parameter should be kept at the lowest value that will allow smooth operation.

NOTE: Parameters P08 and Q08 must always be the same. If Q08 is changed, P08 will take on the same value.

P/Q 09 RED TORQ -- INDRAMAT'S AC SPINDLE DRIVE includes an input on the CDM module called TLA, or 'Torque Limit Active' that reduces the maximum torque obtainable from the spindle motor. The 'TLA' input is located on terminal strip X21, terminal 3. TLA is used primarily in conjunction with indexing, so that the AC SPINDLE drive will not produce full torque allowing the spindle position to be changed slightly to accommodate tool changers, etc. This parameter defines that amount of torque, and is entered as a percentage of the maximum torque available from the motor/controller combination.

P/Q 10 POS GAIN -- Positioning gain used when either POS1 or POS2 inputs are active. Defines the gain, and hence the response of the AC SPINDLE DRIVE during spindle orientation. The value programmed into the CDM at the factory should be sufficient, however, spindle drive train inertia and backlash may necessitate lowering this value. In some cases, higher position gains may be possible.

P/Q 11 OFFSET -- Angle in degrees and 1/10 degrees. This parameter indicates the position of orient position 1 with respect to the marker pulse of the motor's incremental encoder. There is always 180 degrees between position 1 and position 2. The orient position is shifted in a clockwise direction around the motor shaft.

NOTE: If the motor is exchanged, the offset has to be readjusted.

P/Q 12 P GAIN 1 -- Proportional gain of speed regulator below P/Q 14 (GAIN RPM). The characteristics of each motor/controller combination are carefully analyzed to determine the value to be set in this parameter, and the value determined by this analysis is shown on the Parameter List. Normally, this value should not require alteration in the field. If different velocity loop characteristics are desired, this parameter can be used to control the proportional section of the loop, and normal analog velocity loop principles apply.

P/Q 13 — I GAIN 1 -- Integral gain of speed regulator below P/Q 14. For positioning with an external position loop, the P and I gains may be adjusted higher at lower speeds than would otherwise be advisable.

P/Q 14 — GAIN RPM -- Changeover speed from GAIN 1 to GAIN 2.

P/Q 15 — P GAIN 2 -- Proportional gain of the speed regulator above the gain RPM (P/Q 14).

P/Q 16 — I GAIN 2 -- Integral gain of speed regulator above the gain RPM (P/Q 14).

P/Q 17 — POLES -- Physical parameter of the spindle motor. This parameter must be programmed as specified in the Parameter List for the given motor/controller combination.

P/Q 18 — SIGNSLIP -- Physical parameter of the spindle motor. This parameter must be programmed as specified in the Parameter List for the given motor/controller combination.

P/Q 19 — SIGN RPM -- Physical parameter of the spindle motor. This parameter must be programmed as specified in the Parameter List for the given motor/controller combination.

P/Q 20 — MAX SLIP -- Physical parameter of the spindle motor. This parameter must be programmed as specified in the Parameter List for the given motor/controller combination.

P/Q 21 — FLUX -- Physical parameter of the spindle motor. This parameter must be programmed as specified in the Parameter List for the given motor/controller combination.

P/Q 22 — CURRENT -- Physical parameter of the spindle motor. This parameter must be programmed as specified in the Parameter List for the given motor/controller combination.

P/Q 23 — ANGLE -- Angle correction factor according to Parameter List.

P/Q 24 — WARNTORQ -- Defines the turn on point for the CDM display and output 'WARNING'. This parameter is programmed as a percentage of the maximum available torque. If the value is exceeded, the message 'WARNING' appears on the display and the output at terminal strip X21 terminal 12 goes low. This value should not exceed the Parameter List value.

2.3 PARAMETER GROUP SWITCHING

The CDM works with two parameter groups; P00 - P24 and Q00 - Q24 which can be switched. The switching takes place through terminal strip X22, terminal 10. When the input is zero or not wired, the parameter block P is active. The switching takes place without delay and independent of drive condition. It is advisable that the changeover takes place during standstill.

An acknowledgment signal of the active parameter group is not available. For testing purposes it is necessary to switch to the parameter mode whereby the latest active parameter will appear on the display.

The parameter switching makes it possible to adjust the drive to various moments of inertial (gear changes). Also, many drive combinations make a star-delta changeover possible which means that the same motor can have different speed/torque characteristics.

2.4 PARAMETER ENTRY/MODIFICATION

2.4.1 Parameter Mode

Slide the switch in the upper right corner of the CDM to the left, which puts the CDM in the parameter mode.

The 'READY' output on terminal strip X21 terminal 15 goes to zero. If the drive has been running, it decelerates until standstill and then changes over to parameter mode. The drive is then stopped internally.

The parameter group which was active at the time of the changeover appears on the display. In other words, when no voltage is fed to terminal strip X22 terminal 10, the parameter group 'P' is active, 'Q' is only active if 24V is fed to terminal strip X22 terminal 10. The desired parameter group can only be selected at this input.

Example Display:

P00 6000 and Q00 6000(P00 and Q00 is for max rpm)

2.4.2 Display of Software Number

If [E] is depressed when the parameter 00 appears on the display, the software number will appear for a few moments on the display.

2.4.3 Display of Parameter's Title

By pressing the [<] the title of the parameter is shown. The identification will then stay on the display for a few moments (text), e.g. 'POS GAIN'.

2.4.4 Editing of Parameters

1. Call up the parameter to be edited.

2. Move the cursor to the right.

3. 'LOCKED' will appear. A code must then be entered to release the parameter lock.

4. Code: [E] [<] [<] [E] [E]
   This code must be entered only once after each power on, the CDM will then remain in the parameter modification mode until the CDM's power is removed.

5. The cursor then jumps to the last digit of the parameter value. It is moved to the digit to be changed with [<] and [>]. It is possible to jump back to the parameter number with the [<] without changing the value. Value changes are not stored until the [E] key is pressed.

6. The number is decreased or increased by depressing [up arrow] or [down arrow]. Both keys have repeat functions.

7. When the value is correct, [E] is depressed in order to store the value.

8. The cursor jumps back to the parameter number when the entered value lies within the permissible range. Otherwise, the message 'ERROR' appears when the entered parameter is out of range. The [E] key then is needed to be depressed to remove the ERROR diagnostic. After this occurs, the original parameter value returns to the display. Once the correct value has been entered, the slide switch can be moved to the right to resume operation.

9. The drive returns to operation right away, but it may happen that the parameters are not allowed in the existing combination. In this case, 'UNACCEPT' will appear. Then the slide switch has to be returned to the parameter position and [E] has to be depressed; then the false parameter will be displayed. It then has to be changed (generally decreased) to remove the 'UNACCEPT' message.

2.5 PARAMETER VALUE LIMITS

The table on the following page summarizes the maximum and minimum values which can be entered for each of the parameters. These are the absolute limits allowed by the CDM for parameter entry.

TABLE 2-1. PARAMETER LIST FOR CDM 1.4

Name	Number	Range	Units
MAX RPM	P/Q 00	1000 - 6999	RPM
MIN RPM	P/Q 01	1 - 500	RPM
MAX DEV	P/Q 02	1 - 200	RPM
RAMP 1	P/Q 03	(0) 1 - 999	Rad/Sec^2
RPM 1	P/Q 04	1 - 6000	RPM
RAMP 2	P/Q 05	(0) 1 - 999	Rad/Sec^2
RPM 2	P/Q 06	1 - 6000	RPM
RAMP 3	P/Q 07	(0) 1 - 999	Rad/Sec^2
SMOOTH	P/Q 08	0 - 7	---
RED TORQ	P/Q 09	1 - 99	%
POS GAIN	P/Q 10	1 - 200	
OFFSET	P/Q 11	0.0 - 360	DEG, DEG/10
P GAIN 1	P/Q 12	0.00 - 2.00	
I GAIN	P/Q 13	0.00 - 0.99	
GAIN RPM	P/Q 14	0 - 6000	RPM
P GAIN 2	P/Q 15	0.00 - 2.00	
I GAIN 2	P/Q 16	0.00 - 0.99	
POLES	P/Q 17	2, 4, 6	
SIGNSLIP	P/Q 18	2 - 200	RPM
SIGN RPM	P/Q 19	500 - 6000	RPM
MAX SLIP	P/Q 20	5 - 200	RPM
FLUX	P/Q 21	0 - 199	AMPS
CURRENT	P/Q 22	0.0 - 9.9	AMPS
ANGLE	P/Q 23	0.0 - 2.0	
WARNING	P/Q 24	1 - 99	%

CHAPTER 3. FUNCTIONAL DESCRIPTION

3.1 GENERAL

This chapter describes the various inputs and outputs available for customer use on INDRAMAT's AC SPINDLE DRIVE. Most signals are 24 VDC, positive logic (high = condition present). Locations of connections on the AC SPINDLE DRIVE are given as follows:

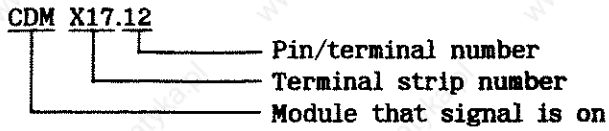

3

3.2 VELOCITY COMMAND INPUTS

The AC SPINDLE DRIVE can be supplied with one of the following types of velocity command inputs. The model number of the CDM will indicate which type of command input is included. The available versions, and the associated CDM model numbers are as follows:

- Digital 16 bit parallel command input — CDM 1.X-D
- Differential analog command input — CDM 1.X-A

Regardless of the version used, the velocity command input is located on a 25 pin subminiature 'D' connector, labeled X18, on the bottom of the CDM module. The pin-out of X18 will depend on the type of command input supplied.

3.2.1 Parallel Digital Command Input

When the CDM is provided with the parallel digital command input, speeds are presented to the CDM in binary form as a 14 bit speed value, along with an additional sign bit.

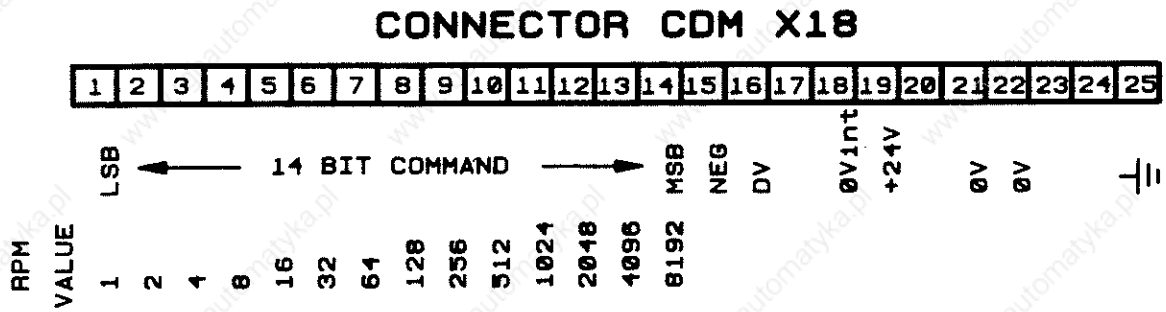

FIGURE 3-1. PARALLEL COMMAND VERSION INPUT CONNECTIONS

The commanded speed value is entered on pins 1 through 14. The bit weight is 1 RPM (pin 1 = 1 RPM, pin 14 = 8192 RPM). Pin 15 is the sign-bit, and is used to determine motor direction. If pin 15 (NEG) is low, the motor will turn CW when viewed from the output shaft. Pin 16, (Data Valid) is used to set speed and direction values. Commands present on pins 1-15 will be accepted by the control as long as DV is high. When DV is taken low, the last accepted command is latched and further command inputs will be ignored. The typical method of applying a digital command would be to set the desired value on pins 1-15, then pulse DV. This prevents the spindle drive from accepting intermediate values that could occur during command changes. Both data and data valid must be stable for at least 4 msec. to be accepted by the CDM.

Note: Pins 18 and 21 must be jumpered for the CDM to operate properly.

The inputs are rated for 24 VDC, which is available at pin 19. The input circuit in the CDM is shown below:

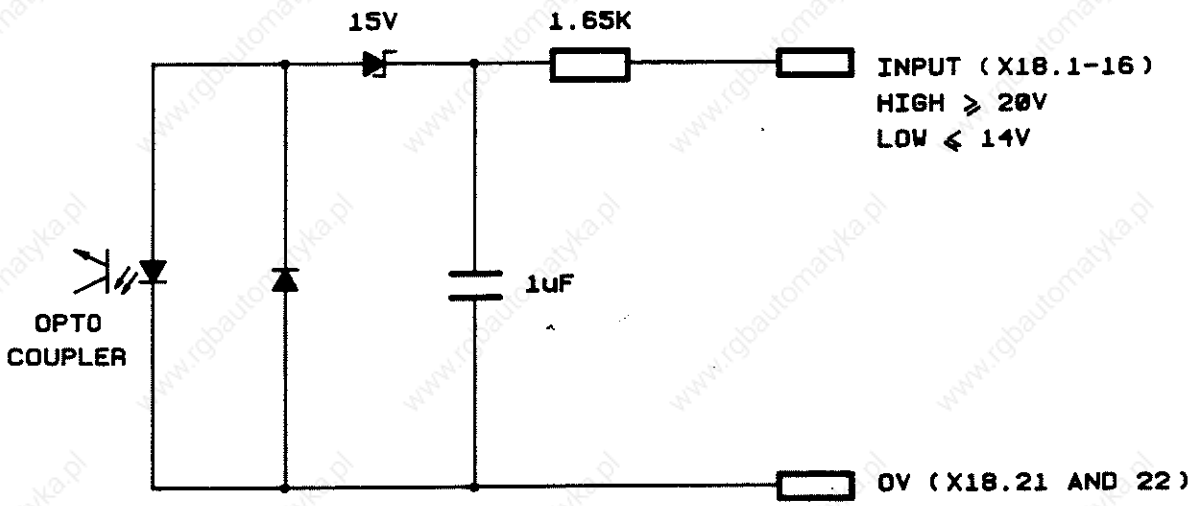

FIGURE 3-2. PARALLEL COMMAND INPUT CIRCUIT

3.2.1.1 Interface Circuits

The following diagrams illustrate possible interface schemes to drive the parallel digital command inputs.

a) Control with relays:

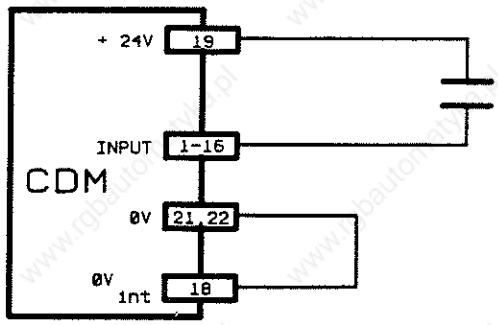

b) Control with external voltage source:

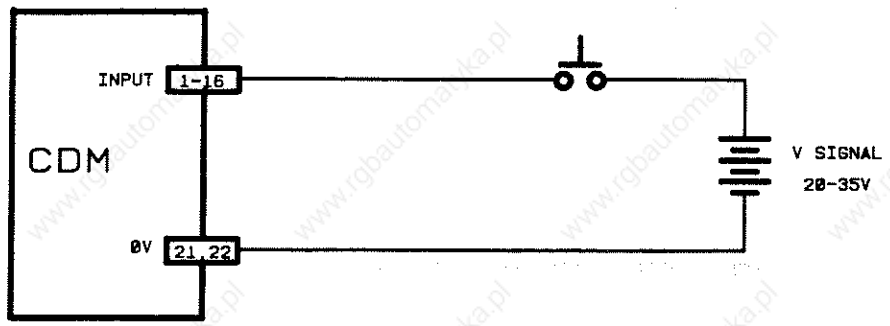

c) Control with open collector outputs:

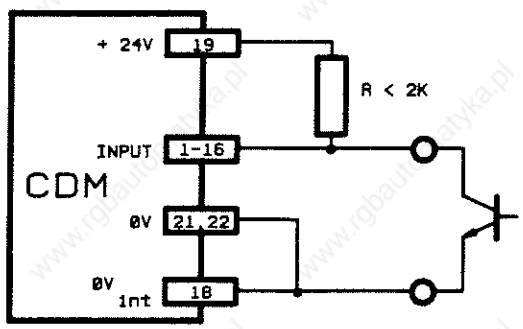

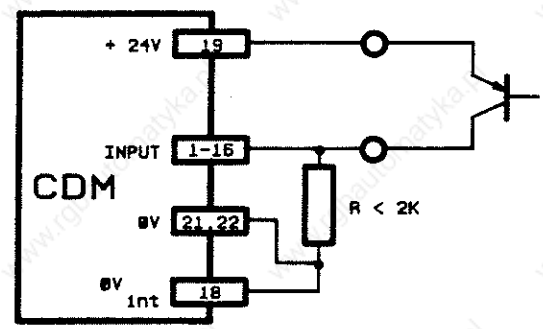

INPUT HIGH, MIN.20V
INPUT LOW, MAX.14V
RELATED TO 0V.

3.2.2 Differential Analog Command Input

If the CDM is equipped with a differential analog, input the connections will be as follows:

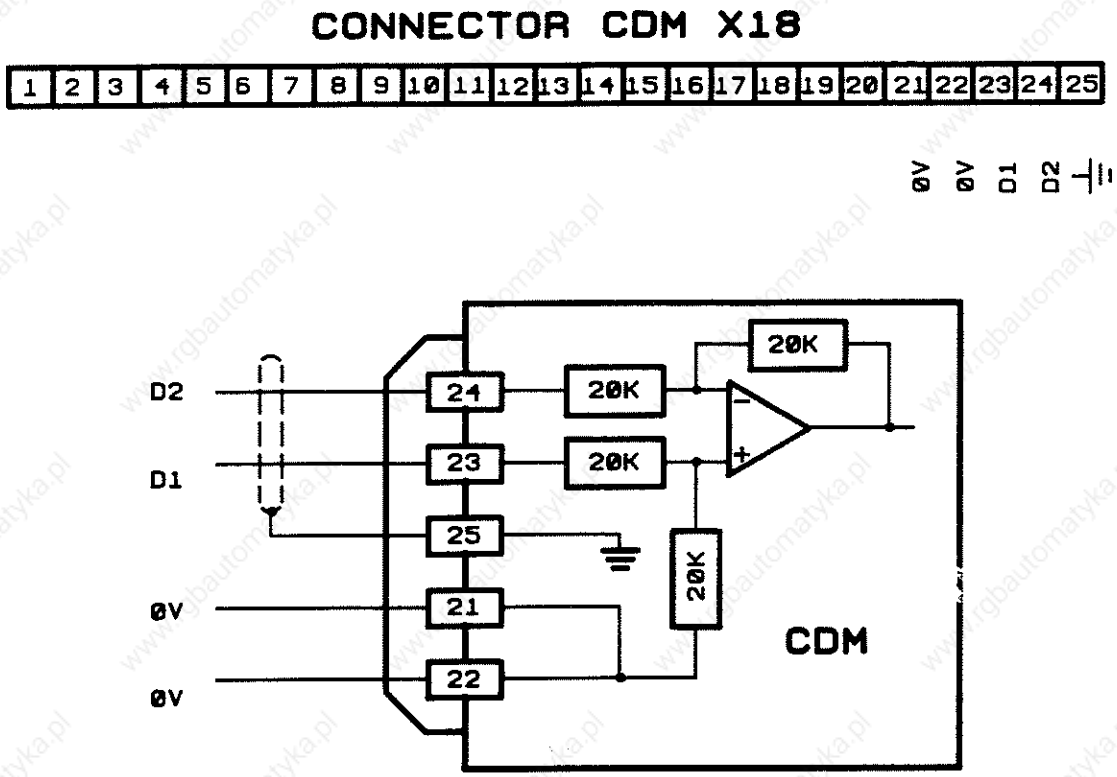

FIGURE 3-3. DIFFERENTIAL COMMAND VERSION INPUT CONNECTIONS

The analog command is input between D1 and D2, and can be between 0 and plus or minus 10 volts. Polarity between D1 and D2 determines motor rotation direction, while voltage level determines velocity. A positive voltage applied to D1 with respect to D2 will produce clockwise rotation as viewed from the output shaft. A 10 volt input will command the motor to the speed programmed into parameter P/Q 00, lower voltages will command proportionally lower speeds. Shielded cable should be used to connect the command, with the shield connected only at the CDM (CDM X18.25).

When the analog velocity command is employed, keep in mind that with zero volts applied at D1 and D2, drift may be present. A null adjustment pot (P1) is provided on the CDM for nulling the command inputs.

P1 is accessible on the top of the CDM, thru the grill. This pot will null the input of D1 and D2. Remove the drift by shorting D1 and D2 together, and turn the pot in the correct direction to remove the drift.

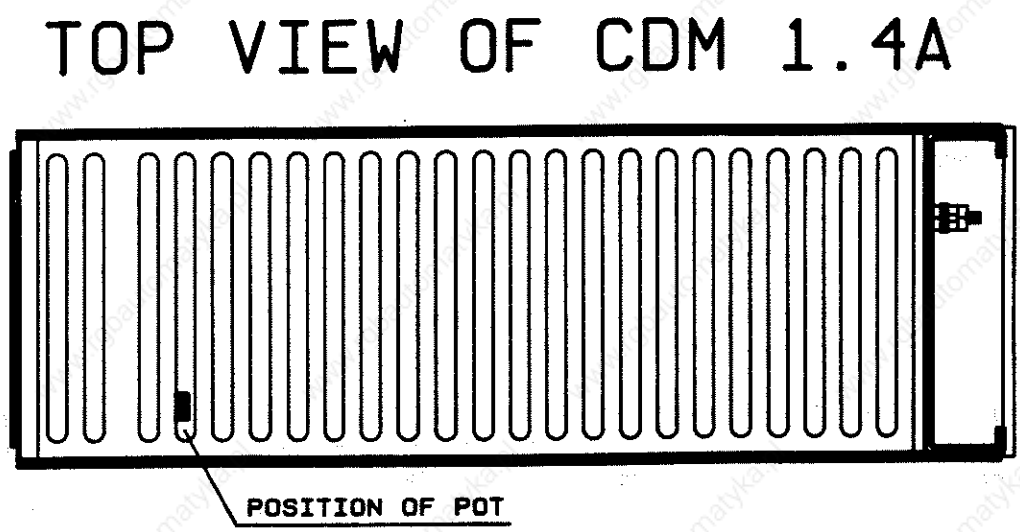

FIGURE 3-4. LOCATION OF (P1) NULL ADJUSTMENT POT

3.3 SUPPLY VOLTAGES

3.3.1 +/-15Vm

Location - KDV X10.1 (+15), X10.2 (0V), and X10.3 (-15)
Type - Output

This supply, is used for all the analog sections of the AC SPINDLE DRIVE. It appears at this terminal strip for external use as an analog velocity command source, if required. Note the total current draw from the KDV +15Vm must not exceed its rating. To determine current draws, each module's individual 15 volt current requirement must be added together. Subtract this value from the available 15 volt supply current out of the KDA to determine what is available for external use.

3.3.2 +24Vint

Location - CDM X22.6 (+24) and X22.8 (0V)
Type - Output

This supply, originating in the KDV power supply, is used for switching, as well as the logic supply for the CDM module. It is available here for possible use as the 24V I/O supply (see 3.3.3). Note the total current draw from the KDV must not exceed its rating. To determine current draws, each module's individual 24Vint current requirement must be added together. Subtract this value from the available current out of the KDV 24V supply to determine what is available for external use.

3.3.3 +24Vext

Location - CDM X22.7 (+24) and X22.9 (0V)
Type - Input

The input and output signals available at the CDM (described in 3.4 and 3.5) require a separate supply voltage, which is input to the system at these two terminals. This supply may be internal to the NC or other device controlling the AC SPINDLE DRIVE, or the KDV's +24V1 supply may be used. To use +24Vint for the +24Vext supply, jump terminals 6 and 7 together, as well as 8 and 9, on CDM terminal strip X22 (see drawing 109-0547-3607-XXA, KDV/KDA/CDM Interconnect).

3.4 OUTPUT SIGNALS

3.4.1 Ready

Location - CDM X21.15
Name - READY

This signal is high when the complete AC SPINDLE DRIVE system is ready for operation. For the signal to appear, the following conditions must be met:

- All required supply voltages present.
- External supply for I/O signals present at X22.7, or internal 24 VDC jumped to X22.7 along with OV internal jumpered to X22.8.
- No motor over-temperature condition exists, interpreted by a contact closure between X22.1 and X22.2.
- The parameter switch must be to the right, in operation mode.

3.4.2 RPM < Minimum RPM

Location - CDM X21.14
Name - STALL

This output is turned on whenever the actual speed of the spindle motor is less than the value programmed in parameter P01.

3.4.3 RPM = Command

Location - CMD X21.13
Name - N=CMD

When the difference between the actual and commanded spindle motor speed is less than the value programmed in parameter P02, this output will turn on. With I-OFF (3.5.5) active and load applied to the motor, this signal may not be obtainable.

3.4.4 In Position

Location - CDM X21.9
Name - POSR

This signal is an indication that the spindle motor has reached indexed position, commanded by POS-1 (X21.6) or POS-2 (X21.7), and is stopped there. It will remain high as long as the motor is in position, and as long as the position command remains present. If the position command is removed before the motor shaft is in position, POSR will appear for only 4 msec. after the motor shaft is in position.

3.4.5 Motor Overtemperature

Location - CDM X21.10
Name - TEMP

This signal will go low when no voltage is present at CDM terminal X22.2, meaning that an overtemperature condition exists. If this condition persists for more than three minutes, the CDM will perform an automatic shut-down by internally removing the ready condition. This diagnostic can also occur when the 14 wire ribbon cable between KDA X20 and CDM X20 is either not connected or defective.

3.4.6 Overload Warning

Location - CDM X21.12
Name - WARN

This signal will go low whenever the torque required to maintain commanded velocity exceeds the percentage of available torque programmed in parameter P10.

3.4.7 Overload

Location - CDM X21.11
Name - OVERL

This signal will go low whenever the motor has developed maximum torque for more than 10 seconds (uninterrupted) without attaining commanded velocity. Note: The presence of both OVERLOAD and WARNING can also indicate that either the incremental encoder or its cable is defective.

3.5 INPUT SIGNALS

3.5.1 Regulator Release

Location - CDM X21.1
Name - RF
LED - RF (on KDA)

The input REGULATOR RELEASE is used as an internal interlock in the spindle drive, and presence of the signal will enable the velocity loop. REGULATOR RELEASE will only be accepted when the spindle drive outputs the signal READY. Once REGULATOR RELEASE is input and accepted, the drive will hold the motor actively at zero speed, however no velocity command will be accepted unless the input RUN is also given. If REGULATOR RELEASE is removed, the motor will be actively decelled (if the motor is running), and once the system senses that the motor is at zero speed, the velocity loop will be opened. To insure active braking of the motor in the event of a power failure, the regulator release should be opened whenever 3-phase power is removed from the KDV (i.e., main contactor opened).

3.5.2 Run

Location - CDM X21.2
Name - RUN

When RUN is input to and accepted by the AC SPINDLE DRIVE, velocity commands will be accepted, and the motor will run at the commanded speed. RUN will only be accepted by the spindle drive if regulator release was previously given and accepted. Without RUN the motor will be actively decelled and held at zero speed. Only positioning (spindle orient) is possible without RUN present. If a positioning command is given to the CDM, the RUN input will only be accepted after the motor is in position, and the positioning command is removed.

3.5.3 Stall Torque Off

Location - CDM X21.4
Name - STO

This input allows the user to release the motor when it is stopped. With STO high, if both the actual and commanded velocities are less than the MINIMUM RPM programmed in parameter P01; the available motor torque will be reduced to zero. This feature could be used during tool-change operations, etc. When the STO is enabled, the LCD display will show STO.

3.5.4 Torque Limit Active

Location - CDM X21.3
Name - TLA

Bringing this input high will cause the maximum torque obtainable from the motor to be limited to the percentage of maximum torque programmed in parameter P09. When the value in P09 is small enough, the motor shaft may be turned against a positive stop without the danger of damaging mechanical components.

3.5.5 Integral-Gain Off

Location - CDM X21.5
Name - I-OFF

The integral-gain section of the AC SPINDLE DRIVE's velocity loop is disabled by bringing this input high, and is again made active by removing the input. There are certain cases where it is advantageous to have control of the integral section. When the I-OFF signal is high, the velocity of the motor will become more dependent upon the load placed on the motor shaft. Also, with I-OFF high, the signal 'RPM = COMMAND' becomes dependent upon motor load, and if the value in parameter P02 (Maximum Deviation) is too small, the signal may eventually be lost.

3.5.6 Positioning Commands

Locations - CDM X21.6 and X21.7
Names - Pos 1 and Pos 2

Using these inputs, the motor can be commanded to two different positions, a primary position (Pos 1, X21.6), or a secondary position 180 degrees from the primary position (Pos 2, X21.7). A position command can be initiated either while running or at zero speed. If the motor is running when a positioning command is given, it will position in the same direction it is running. If the motor is at zero speed, positioning will take place at a velocity and direction determined by the velocity command input. If no velocity command is given, the motor will be positioned at the maximum positioning speed, searching in the clockwise direction.

Command Sequence to Position from a Run Condition

- Bring Pos 1 or Pos 2 high

- Remove RUN signal

Command Sequence to Position from Zero Speed

- Bring RUN low

- Set positioning speed and direction on command input

- Bring Pos 1 or Pos 2 high

If a second position is to be commanded while in position at the other (e.g., go to position Pos 2 from position Pos 1), the first position command must be removed before the second is presented.

Once a position command (Pos 1 or Pos 2) is presented to the CDM, the RUN input will be inactive until the position command is removed.

3.5.7 Motor TAS

Locations - CDM X22.1 and X22.2
Name - MOT

These two inputs are connected to a normally closed contact that will open when the motor reaches its temperature limit. When the AC SPINDLE motor is supplied by INDRAMAT, a thermistor is mounted in the motor and connects to an external overload detector. The detector has an isolated contact as an output wired across these two terminals. If another device is used, a normally closed isolated contact, which opens for overtemperature, should be connected between these two terminals.

3.6 CDM INPUT/OUTPUT CIRCUITS

For high noise immunity, all of the CDM input and output signals are optically isolated from the internal bus, and must be operated by using an external voltage source as illustrated in figure 3-4. This is valid for signals appearing on terminal strip CDM X21 as well as the motor TAS input at CDM X22.

If the CDM is referenced to the same common (0V) as the device controlling it, the 24Vint supply in the KDV may be used as an I/O voltage source. Jumping CDM X22.6 to X22.7, and X22.8 to X22.9 will tie 24Vint to 24Vext.

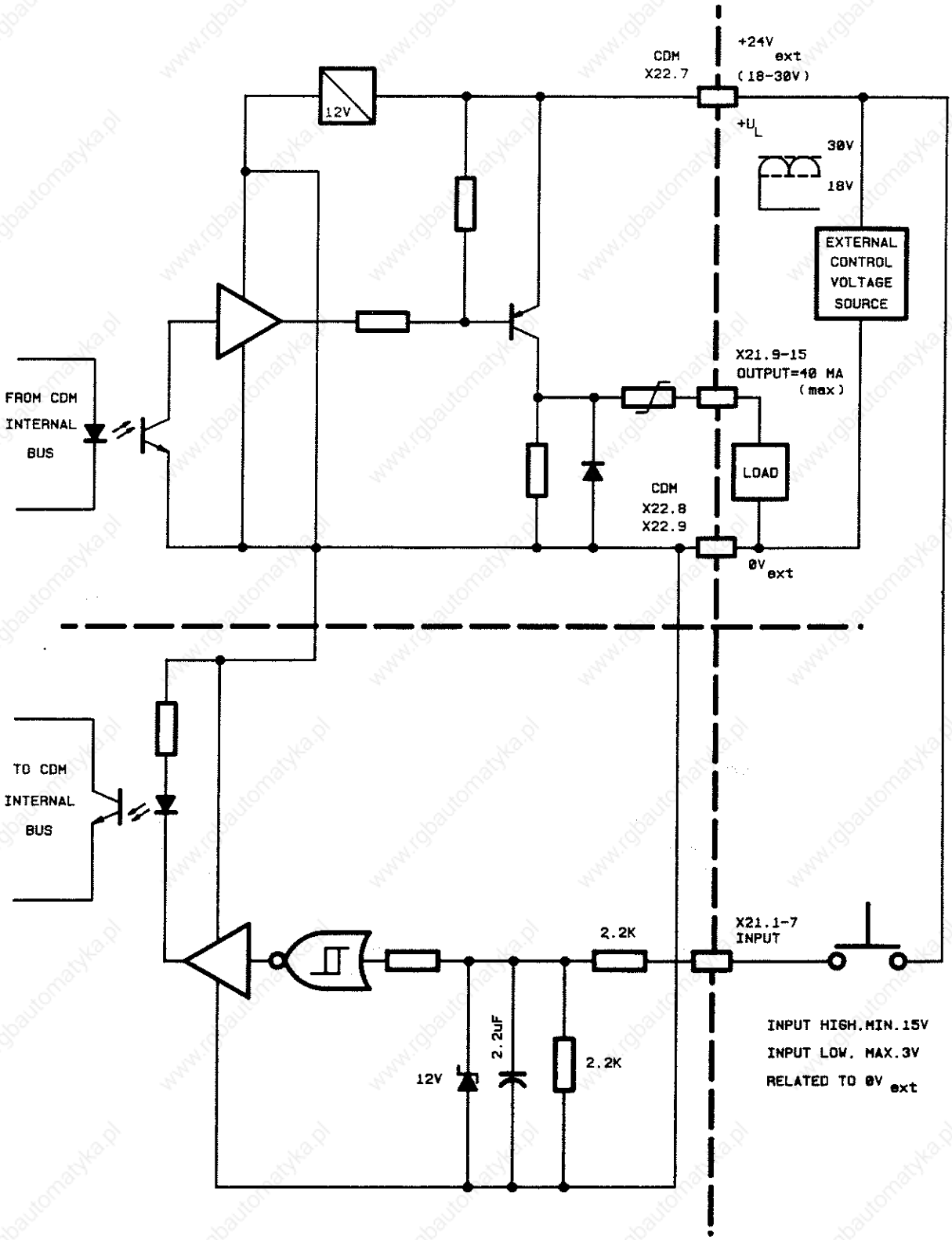

FIGURE 3-5. CDM INPUT/OUTPUT CIRCUITS

3.6.1 Driving CDM Inputs

The following diagrams illustrate several methods available to drive CDM inputs. Note that if the 24Vint supply is used as the I/O voltage supply, the external voltage source shown in these diagrams is not required.

1. Input driven by an isolated contact:

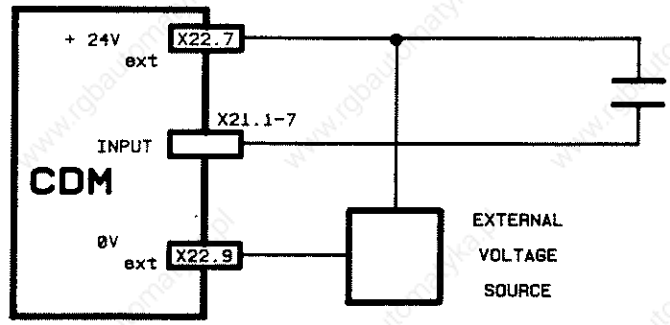

2. Input driven by an active voltage:

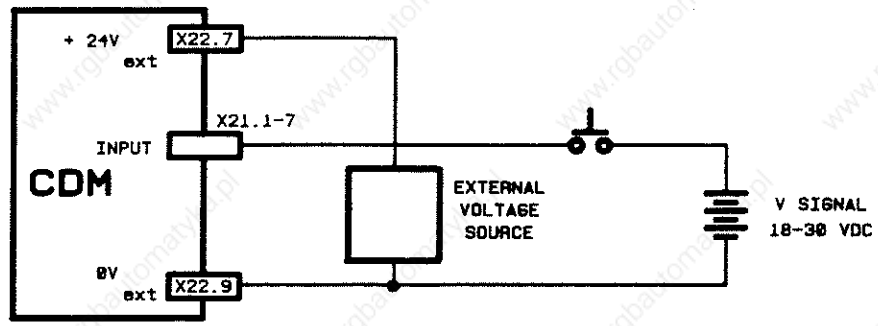

3. Input driven by an open collector output:

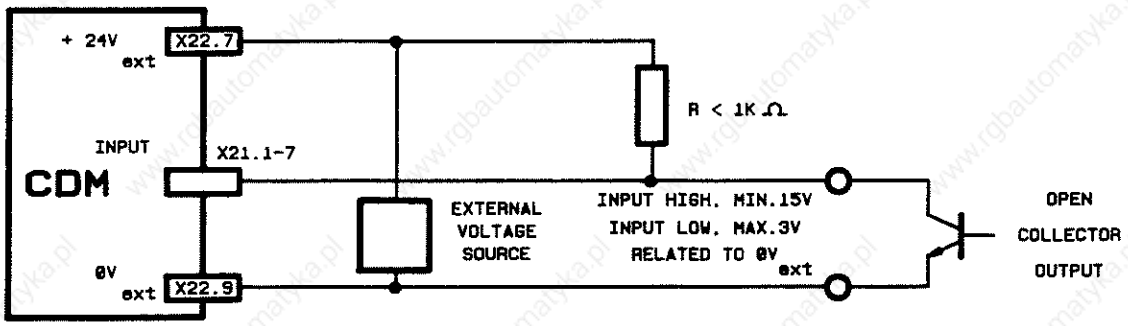

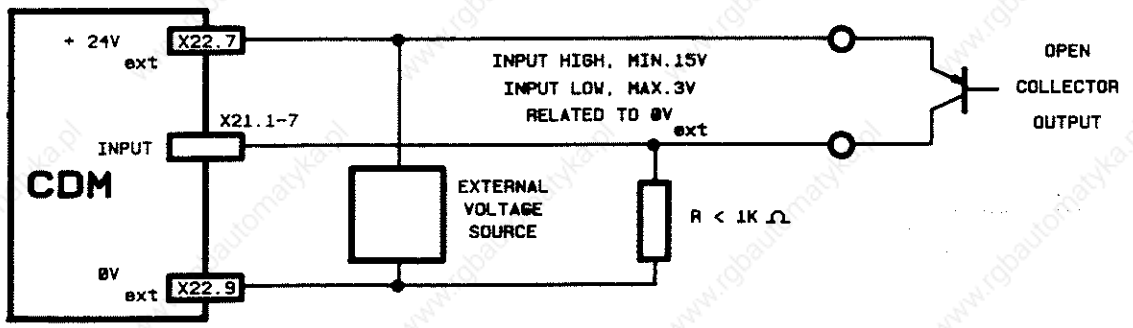

CHAPTER 4. INSTALLATION

4.1 DEVICE INSTALLATION

The AC SPINDLE DRIVE system modules, KDA, CDM, and KDV are designed for panel mounting within a sealed (i.e., NEMA 12) cabinet. The auto transformer used to convert line power to 220 VAC 3-phase power for the KDV can be either of open construction for mounting within an enclosure or totally sealed for mounting outside. An example of the interconnection of the various modules composing the AC SPINDLE DRIVE is shown at the end of this manual. The AC SPINDLE DRIVE may also be operated along with TDM and KDS modular AC SERVO controllers, sharing the KDV power supply. The factor limiting the number of controllers and AC SPINDLE DRIVES that may be operated from one KDV is the amount of power available from the KDV, both main power and low voltage supplies, and the amount of power returned to the KDV during decel. These factors are considered during sizing calculations for the application.

Mechanical dimensions of the AC SPINDLE DRIVE modules, including drill holes for mounting and other installation recommendations, are given at the end of this manual. If TDM or KDS AC SERVO controllers will be powered from the same KDV; the setups should be mounted between the KDV and KDA, as the KDA and CDM must be mounted next to each other and the DC power bus (L+ and L-) does not connect to the CDM. The minimum spacing distances above and below the modules cited in the drawing must be observed. Unrestricted flow of cooling air must be assured and heat dissipating components such as power transformers must not be mounted directly underneath the modules.

The ambient temperature at the installation site should not exceed 45 degrees C. If higher temperatures will be encountered, additional cooling (forced-air, air conditioning, etc.) should be employed, to maintain a maximum ambient of 45 degrees centigrade or less.

4.2 ELECTRICAL CONNECTIONS

Electrical connections include:

- Signal lines
- Control voltage supplies
- Low voltage supplies
- Motor thermal overload
- Motor feedback
- Power wiring
- Grounding
- Blower supply
- Electrical accessories

These connections must be made according to the interconnect drawing at the end of this manual.

4.2.1 Signal Lines

The signal lines must be routed separately from the power supply lines. Even parallel orientation with the power lines should be avoided. The command signal (analog differential or parallel digital) is connected to the CDM module via connector X18. Refer to 3.2 for a description of these signals.

4.2.2 Control Voltage Supplies

The KDV requires single phase AC power to operate its low voltage supplies, connected to terminal X10 on the KDV. This can be either 115, 220, or 380 VAC, determined by the type KDV supplied. Dual voltage inputs are supplied; either 115/220 or 220/380 VAC, and the voltage rating of the KDV is included in its part number. Refer to the appendix for part number descriptions.

The KDV and KDA include forced-air cooling, and the blowers may be either 115 or 220 VAC, single phase. The appendix will give part number descriptions. Incoming blower power should connect to X13 on the KDV, and then the additional modules connected to the supply in 'daisy chain' fashion via jumper cables supplied with each device. Each blower assembly contains a connectorized cable which plugs into X14 of the module it is cooling.

4.2.3 Low Voltage Supplies

The KDV power supply module contains a regulated +15 VDC supply (labeled +15Vm) as well as a regulated 24 VDC supply (+24V1). These supplies are routed to the other modules by means of a ribbon cable. One ribbon cable is included with the KDA one with the CDM (and one with each TDM or KDS, if used). Since this cable also includes internal information exchange between the controllers and KDV, a terminator connector is included with each KDV, and should be placed on the last module of a controller system (see interconnect). The internal supplies may also be used for external purposes, as long as the total power draw does not exceed the power supply rating.

The CDM also requires a 24 VDC external I/O supply (+24Vext) for the signals that appear on terminal strip X21. This may be either a user-supplied device or the +24V1 supply from the KDV. +24Vext connects to the CDM via terminals 7 and 9 on strip X22. If +24V1 will be used as the I/O supply, install jumpers between terminals 6 and 7 of X22 (+24V) and terminals 8 and 9 also on X22 (0V).

4.2.4 Motor Thermal Overload

The CDM has two connections on terminal strip X22 (terminals 1 and 2) that are used for a normally closed contact that will open when a spindle motor overtemperature condition exists. A thermistor is mounted in the motor which connects to an overload detector. When the detector senses an overtemperature condition, it will open a contact connected to the CDM.

4.2.5 Motor Feedback Wiring

The AC SPINDLE DRIVE obtains motor rotor position information via an incremental encoder mounted on the back of the spindle motor. This is connected to the CDM module via a connectorized cable. The cable must be shielded, and should be as short as possible. This cable can be supplied by Indramat.

4.2.6 Power Wiring

The KDV receives its main power from a 3-phase 220 VAC power source, either by transformer or direct from 220 VAC lines. The power is connected to terminals L1, L2, and L3 on the KDV. This is internally rectified, and appears on terminals L- and L+ as a 300 VDC supply. This power is routed to the KDA (and any other AC SERVO controllers, if used) by means of bus bars. Two bus bars are supplied with each controller module.

The motor power is connected between terminals A1, A2, A3 and the ground lug on the KDA and the spindle motor via either twisted wires or a four wire cable.

Observe the nut tightening torque values listed on the dimensional drawing for power connections on the KDV and KDA.

4.2.7 Grounding

Local safety regulations for grounding must be observed. If a separate electronic grounding point exists (e.g., NC ground), connect it to the grounding bus of the KDV power supply, using a very short 10-gauge wire. Connect all attached modules separately to the KDV grounding bus. The spindle motor must be grounded at the ground terminal of the KDA module.

NOTE

Cross connections in the grounding-wire system may result in ground loops which can cause operating problems. Follow the wiring diagram exactly.

4.2.8 Electrical Accessories

The KDA receives its command signals from the CDM thru the X20 connector. The 14 pin ribbon cable is standard length of 110 mm. If a longer one is required, specify on the order the proper length required.

The command for the CDM (either digital or analog) is routed thru the X18 connector to the CDM from the control. Refer to Chapter 3, Section 2 for details on the wiring of the X18 connector.

CHAPTER 5. START-UP

5.1 EQUIPMENT REQUIRED

The following equipment is needed for start-up of the AC SPINDLE DRIVE:

- AC/DC multimeter, moving coil or digital.

5.2 INITIAL CHECKOUT

1). Check the external wiring of the AC SPINDLE DRIVE, comparing the actual installation with the interconnection drawing. Insure that all wires are inserted into terminals securely and that the terminal screws or nuts are tight. Inspect the L+ and L- bus bars to be sure that their fasteners are secure, as poor contact on these connections can result in severe damage to the power section (KDA).

2). Check for compliance with local wiring codes and safety regulations. Insure that non-fused ground leads are connected to each module (KDV, KDA, and CDM), as well as the spindle motor and power transformer.

3). Inspect the velocity command wiring, insuring that the wiring is shielded, with the shield connected only on the CDM end of the cable.

4). The lines to the motor, A1, A2, and A3, must be twisted and must be routed along the shortest possible path.

5). Check that the input voltage of both the control and power transformers (if present) agree with the local mains voltage, and that the output of each transformer (or the mains if no transformers are used) agrees with the appropriate power input on the KDV Power Supply Module.

6). Insure that the blower connectors are wired on all blower-equipped modules in the system.

7). Remove the Regulator Release (RF) wire connected to CDM terminal X21.1. Remove the motor feedback connector on CDM connector X17.

8). Apply the control voltage to KDV terminal strip X10 and measure the output voltages +24V and +15Vm. +24V is regulated and should measure close to 24V, the +15Vm supplies should be within 100 mv of 15 VDC. Check the LEDS on the front panel indicating the monitoring functions. The Bb1 contact on the KDV should be closed and auxiliary control relay CR1 should be energized. The LCD on the CDM should display:

'NO POWER'

If the message 'NO 24VEX' is displayed on the CDM, the connections to CDM terminals X22.7 and X22.9 must be inspected. They should be connected to the external I/O supply, or jumped to X22.6 and X22.8 if the drives internal 24-volt supply will be used for I/O.

If the message 'OVERTEMP' appears on the CDM, the contact between CDM terminals X22.1 and X22.2 is open. If an overload detector is used, check that the LED on it is not lit (if so, press the 'R' reset button). If 'OVERTEMP' is still on, check to see that the cable between X20 on the KDA and X20 on the CDM is connected.

9). Check that the motor and module blowers are operating correctly.

10). Energize contactor M1 to bring in the 3-phase power voltage and check the DC bus supply (L+ and L-). The voltage should be between 255 and 345 VDC. The green LED on the KDV should be lit, and READY should be output from the CDM. The CDM should display:

'NO RF'

11). Check out the operation of the emergency stop chain in the power control circuit.

12). Remove all power to the AC SPINDLE DRIVE, and re-install the RF wire removed in step 7 **(leave the motor feedback cable disconnected)**.

5.3 INITIAL START-UP

1). Set all control inputs on connector X21 on the CDM to zero volts.

2). Re-apply control power only (not 3 phase) to the AC SPINDLE DRIVE.

3). Set the velocity command to zero RPM. If the CDM is equipped with a differential analog command, it should be set to zero volts. If the CDM is equipped with the parallel digital command input; set all bits to zero and bring the data valid (DV) high. The stall output on the CDM should be high. The LCD on the CDM should display:

'NO POWER'

4). Energize M1 to apply 3-phase power to the KDV, and bring the regulator release input RF high. The motor shaft should not turn, and the CDM should display:

'NO RUN'

Now apply a very large, positive command. If the CDM is supplied with the analog input command, apply positive 10 VDC to D1 (X18.23) with respect to D2 (X18.24). If the CDM is supplied with the parallel digital command, set the MSB to 1 (X18.14), NEG to 0 (X18.15) and DV to 0 (X18.16). After the command is set, bring the RUN input (CDM X21.2) high.

> Note: with the motor feedback disconnected, the motor will be operated at maximum current, so the following test should be done in one step and the power removed. If not, overheating of the motor can result.

Once RUN is brought high, the motor should turn slowly in the clockwise direction (when viewed from the output shaft), and the CDM will display 'WARNING'. In about 30 seconds, the CDM will display 'OVERLOAD'. If the motor is turning counter-clockwise; remove power and swap any two power wires running between the KDA power terminals A1, A2, and A3, and the spindle motor. If the motor does not run at all, check to be sure that the LED 'RF' is lit on the KDA. If not, check for correct wiring of 'RF' circuit (X21.1). When everything checks out, remove power to prevent motor overheating.

5). Remove all power and reconnect the motor feedback cable to connector X17 on the CDM. Now re-apply power and give a SMALL velocity command (about 200 RPM), then bring the RUN line high (X21.2). The motor should now run the commanded speed and direction, and the output 'N = CMD' should be on. The CDM display should also reflect this fact. If the motor is not running at the command speed and/or direction, inspect the motor feedback cable, and/or the incremental encoder.

5.4 POSITIONING CHECK-OUT

Bring positioning command input Pos 1 high (CDM terminal X21.6) and remove RUN (CMD X21.2). The motor shaft should move to the primary position ('zero degrees') turning up to two revolutions to obtain position. While the motor is rotating, the display will say 'POS ORDER' on the CDM display. After the motor is stopped at zero degrees, the output Pos R (X21.9) should go high, and the display on the CDM will say 'IN POS'.

If the secondary position will also be used, inspect its operation by removing the command from Pos 1 and bringing Pos 2 (CDM X21.7) high. The motor shaft should move to a position 180 degrees from the primary position.

5.4.1 Adjustment of Orient Position

The position that the motor shaft stops at when spindle orient is commanded is determined by the relationship between the incremental encoder and the motor rotor. If it is necessary to change the orient position, the following steps can be taken:

1) Enter parameter modification mode. (See Chapter 2.3.)

2) Call up P/Q-11 (offset).

3) You can program a 0° to 360° offset for Pos 1 and Pos 2 with this parameter (there will always be 180° between Pos 1 and Pos 2). Increase the value until the orient position is satisfactory.

5.5 RAMP ADJUSTMENT

The INDRAMAT AC SPINDLE DRIVE has provisions for controlling accelerations and decelerations with up to 3 independent rates (slopes). Slopes 1, 2 and 3 are determined by parameters P03, P05, and P07 respectively. The speed range in which the slopes are active is determined by RPM values entered into P04 (RPM N1), and P06 (RPM N2).

Slope 1 is active from zero speed up to N1, slope 2 from N1 to N2, and slope 3 from N2 to Nmax (parameter P00). Ramp rate 1 is only active during accel, 2 and 3 are active during both accel and decel.

The intent is to allow 'soft starts' by programming slope one with a fairly slow ramp rate. This will prevent strong 'hits' on the spindle drive train from occurring when taking off from zero speed or performing a reversal. Ramp two can be used to take advantage of the motors torque capability through its constant torque range (up to base speed, which would be programmed as N2). Ramp three can then be programmed for a reduced ramp rate in the constant horsepower range, from base speed up to the maximum speed of the spindle motor.

When the AC SPINDLE DRIVE is shipped from the factory, nominal ramps parameters are programmed into it and documented on the PARAMETER LIST, and these should be sufficient for most applications. If ramp changes are desired, follow the instructions in chapter 2, 'PARAMETERS'. If ramp parameters are changed, a check should be performed to be certain that the AC SPINDLE DRIVE system is not being over-stressed during accels and decels. To do this, make sure that parameter P19 (RED TORQ) is set to 80% or less, which is the trip point for the WARNING DISPLAY and output. Now accel and decel the motor using instantaneous (step) velocity command changes between zero and maximum RPM, and observe if WARNING appears on the CDM display, or the output WARN goes low. If this happens, the appropriate ramp(s) will have to be reduced to eliminate the warning display.

5.6. DIAGNOSTIC MODE

The CDM display is in the diagnostic mode if the parameter switch is in the right position.

The slide switch must always be to the right during operation, otherwise the drive is disabled.

3 diagnostic modes are possible with the CDM. They are as follows:

- Status
- Speed (RPM) display
- Load display

The status diagnostic appears automatically when the unit is switched on. The other two modes can be selected by depressing either the [up arrow] or the [down arrow]. When (E) is depressed, the display will always return to the status diagnostic. The display will automatically switch to the status diagnostic in case of an error. Refer to Chapter 6 for further explanation of these modes.

5.7 PROGRAMMING MODE

Sliding the parameter switch to the left will cause the CDM to enter the programming mode. The drive will be disabled (regulator release internally opened) and parameters may be reviewed and/or changed. For instructions on Parameter Entry/Modification, refer to Chapter 2.3

CHAPTER 6. MAINTENANCE AND TROUBLE-SHOOTING

6.1 MAINTENANCE

INDRAMAT AC SPINDLE DRIVES do not include any components that require periodic maintenance, nor any field-adjustable circuits, and thus are totally maintenance free.

6.2 DIAGNOSTICS

The KDA and the KDV have LED indicators on their front panels to aid in determining causes for interruption of operation. The CDM has an 8 character LCD display for displaying error/status messages to aid in trouble-shooting.

6.2.1 Indicators

Below is a table giving a description of each diagnostic indicator in the AC SPINDLE DRIVE system, their meaning, and possible causes if incorrect operation is present.

NAME	LOCATION	DESCRIPTION
OVERVOLTAGE	KDV	This red LED will illuminate when the DC bus voltage rises above its maximum limit. This condition will occur when either the bleeder circuit in the KDV fails, or excessive decel rates are present. Overvoltage faults may be caused by: - 3-phase power greater than 220 VAC +15%. - Insufficient ventilation of system. - Excessive regeneration (great inertias decelled at too high duty cycle).
POWER ON	KDV	This green LED indicates that 3-phase power is present at L1, L2, and L3 on the KDV, and that the DC BUS (L+ and L-) is greater than 200 VDC. POWER ON should be lit whenever the main contactor is energized. If it isn't, either the 3-phase is missing or too low, fuse F1 on the KDV is blown, or the KDV is defective.
BS	KDA	This red LED indicates that the semiconductor bridge in the KDA has sustained a short circuit condition for an excessive period of time. An electronic bridge fuse circuit is included in the KDA that constantly monitors bridge current. If the current exceeds a preset limit, the bridge fuse will activate an immediate turn-off of the power transistors and will not permit re-triggering for 5 msec. If the excess current returns after turn-on, about 2 msec. later the safeguard procedures will be repeated. If this re-trip situation persists, the bridge fuse will go into a continuous lock-out condition, and the red 'BS' LED will illuminate. The bridge fuse can be reset by either cycling power, or pressing the RESET pushbutton on the KDA. If the BS LED lights again after resetting, the KDA may be defective.

NAME	LOCATION	DESCRIPTION
TU	KDA	A thermally activated switch is mounted on the heatsink of the KDA to detect excessive temperature. Opening of this switch will cause the red 'TU' LED to illuminate. This condition indicates either a sustained overload condition on the KDA, or that the ambient temperature in the cabinet where the KDA is mounted is above specification.
TS	KDA	If the 'TU' LED (see above) remains lit for more than about 2 minutes, the KDA will internally open the regulator release circuit, causing a shut-down. 'TS' indicates this has occurred, and may be reset by either cycling power or pressing the RESET pushbutton on the KDA.
+24/+15	KDA	Green LED normally illuminated, indicating +24Vl supply is at least +20V, and +15Vm supplies are at least 13V and within 250 mV of each other. The supplies are located in the KDV, and can be measured there on terminal strip X10. They are routed to the KDA via ribbon cable.
POWER	KDA	The DC bus voltage (L+ and L-) is monitored at the KDA for a minimum value of 250V. Normal status is indicated by this green LED on the KDA. Note that this LED will not illuminate until 3-phase power is applied to the KDV.
RF	KDA	RF indicates that the regulator release input to the CDM (X21.1) is high, no faults are detected in the CDM that would cause READY to be lost (see 3.4.1), and that no fault exists in the KDA.
Bb	KDA	Green LED, normally lit, indicating that none of the faults indicated by the LEDs BS, TS, TU, +24/$\pm$15, and POWER are present. An isolated contact between KDA X27.1 and X27.2 will be closed whenever this LED is lit.

6.2.2 CDM Diagnostics

The CDM will display status messages when in the status mode of the CDM. Error messages have the highest priority.

6.2.3 Individual LCD Messages

6.2.3.1 PARALOST

No parameters have yet been stored in EEPROM, or they have been lost due to incorrect handling of the AS2 module.

Action: Slide switch to "parameter", then depress [E]. "BASEPARA" will appear on the display shortly after that. Then the so-called base parameters are loaded. They are selected so damage will not occur. [E] then has to be depressed again to get into the parameter mode. The correct parameters can then be loaded.

6.2.3.2 UNACCEPT

The parameters are not allowed in the present combination.

Action: Slide switch to "parameter", then depress [E]. The false parameter is displayed and has to be changed (generally increased).

6.2.3.3 NO 15V

The +/- 15V supply current which is fed to the CDM through connection X1 is interrupted.

Action: Check supply cable.

6.2.3.4 NO 24VEX

The external voltage for the input/output (terminal strip X22, terminals 7 and 9) is missing, has the wrong polarity, or is too small. The terminals for $24V_{ext}$ and $0V_{ext}$ may, if necessary, be connected to the 24_{int} and $0V_{int}$ (terminal strip X22, terminals 6 and 8).

6.2.3.5 NO POWER

The power is not turned on, the DC Bus voltage is less than 200V or the KDA is not ready. The message is generated in the KDA and connected to the lights "power" and "Bb" on the KDA.

In other words, when the lights are lit and "NO POWER" is still displayed at the CDM, the connection X20 from the KDA to the CDM has to be checked.

NOTE: The power cannot be turned on when there is no terminating resistor at X1 (terminating connector).

6.2.3.6 OVERTEMP

The output "TEMP", terminal strip X21, terminal 10 goes low.

Either the motor or the KDA cooling unit has become too hot. The drive is automatically turned off 3 minutes after the display of the message (in case of too high temperatures at the KDA after only 30 seconds!!).

Action:
1. Where did the overheating take place?
2. The light "TU" lights up when the KDA is overheated.
3. Check cooling unit ventilation!!
4. The motor temperature is monitored by an overload relay. A red lamp lights up at the overload relay in case of too high motor temperatures. Check motor ventilation! Reset overload relay!

6.2.3.7 NO RF

Drive enable is missing at terminal strip X21, terminal 1.

6.2.3.8 IN POS

The output "POSR", terminal strip X21, terminal 9, goes high. The drive has been positioned and is in position (position control).

6.2.3.9 POS ORDER

A position command is entered either through POS1 or POS2. The drive is put into position. If the message "IN POS" does not appear, the drive cannot get into the commanded position for some reason. (IOFF is tied high, TLA energized).

6.2.3.10 NO RUN

Signal missing at terminal strip X21, terminal 2. At the same time, no position command is active. The drive ignores the commanded speed and sets an internal commanded value = 0. This prevents the drive from drifting.

6.2.3.11 OVERLOAD

The output "OVERLOAD" at terminal strip X21, terminal 11, goes low.

The drive is overloaded. Not enough power is available to obtain commanded speed. The message appears with a 10 second delay.

6.2.3.12 WARNING

The output "WARNING", terminal strip X21, terminal 12, goes low.

The torque output to the motor is higher than the continuous torque rating. Watch duration of the condition!! "WARNING" only appears on the display when the actual speed equals the nominal speed.

6.2.3.13 STO

Stall Torque Off. The torque is switched off when input on terminal strip X21, terminal 4, is brought to 24v. Actual value and commanded value are smaller than minimum speed. Doing this shuts down the torque of the drive.

6.2.3.14 I-OFF

Bringing this input to 24v reduces the integral gain to zero. This has the same effect as TLA.

6.2.3.15 N < NMIN

The output "STALL" at terminal strip X21, terminal 14, goes high. Actual speed is less than minimum speed.

6.2.3.16 N = NCMD

The output "N = NCMD" terminal strip X21, terminal 13, goes to 24v.

6.2.3.17 N * NCMD

The commanded speed has not yet been reached. The drive is still decelerating or accelerating. If no I-factor is programmed, the drive cannot reach the commanded speed under load conditions. Increase allowed deviation!!

6.2.4 Speed Display (N)

The actual speed of the motor is displayed in RPM on the LCD display. Entry into this mode is described in Chapter 5, Section 5.6.2. When the RPM is displayed with no sign in front of it, this means the shaft is turning clockwise (when standing in front of the motor). A negative sign in front of the RPM display means the motor is turning counter-clockwise.

Example:

N = 5431

An analog voltage is also available for speed measurement. This is found on terminal strip X22, terminal 5. This output is scaled in correspondence with P/Q 00 (MAX RPM). When the motor is at the parameter's limit, the output will be 10v. (A negative voltage will relate to a counter-clockwise rotation.)

6.2.5 Load Display (M)

The loading of the drive is given as 0 to 100% on the LCD display or the analog output on terminal strip X22, terminal 4. A 10v signal corresponds to 100%. A value of 100% equals peak torque (or horsepower) of the motor. The value of torque that is being exerted by the 1AD motor can be computed as follows:

Take a reading of M at the point of load in concern, either from the display or the output. At the same time, see what RPM the 1AD motor is operating at by either using the output or the LCD display. From this information, refer to the speed torque curve for the Drive/Motor combination in use. See what peak torque is available at the RPM the M was measured at. With that value, multiply it by the percentage of M, which will result in the torque the motor was exerting. Now with that torque, you can calculate the horsepower by multiplying the torque with the RPM the torque was measured at, and then dividing by 5252. This will give you the horsepower that was used. To convert the horsepower in to Kilowatts, multiply the horsepower by .746.

Example: An M of 50% at an RPM 1000 on a 1AD180L with a KDA 150 with an AS2/010 programming module computes to a torque of 77.5 ft-lbs (155 ft-lbs * .50) and a horsepower of 14.75. (77.5 ft-lbs multiplied by 1000, then divided by 5252).

$$\frac{\text{Torque (ft-lbs)} * \text{RPM}}{5252} = \text{Hp}$$

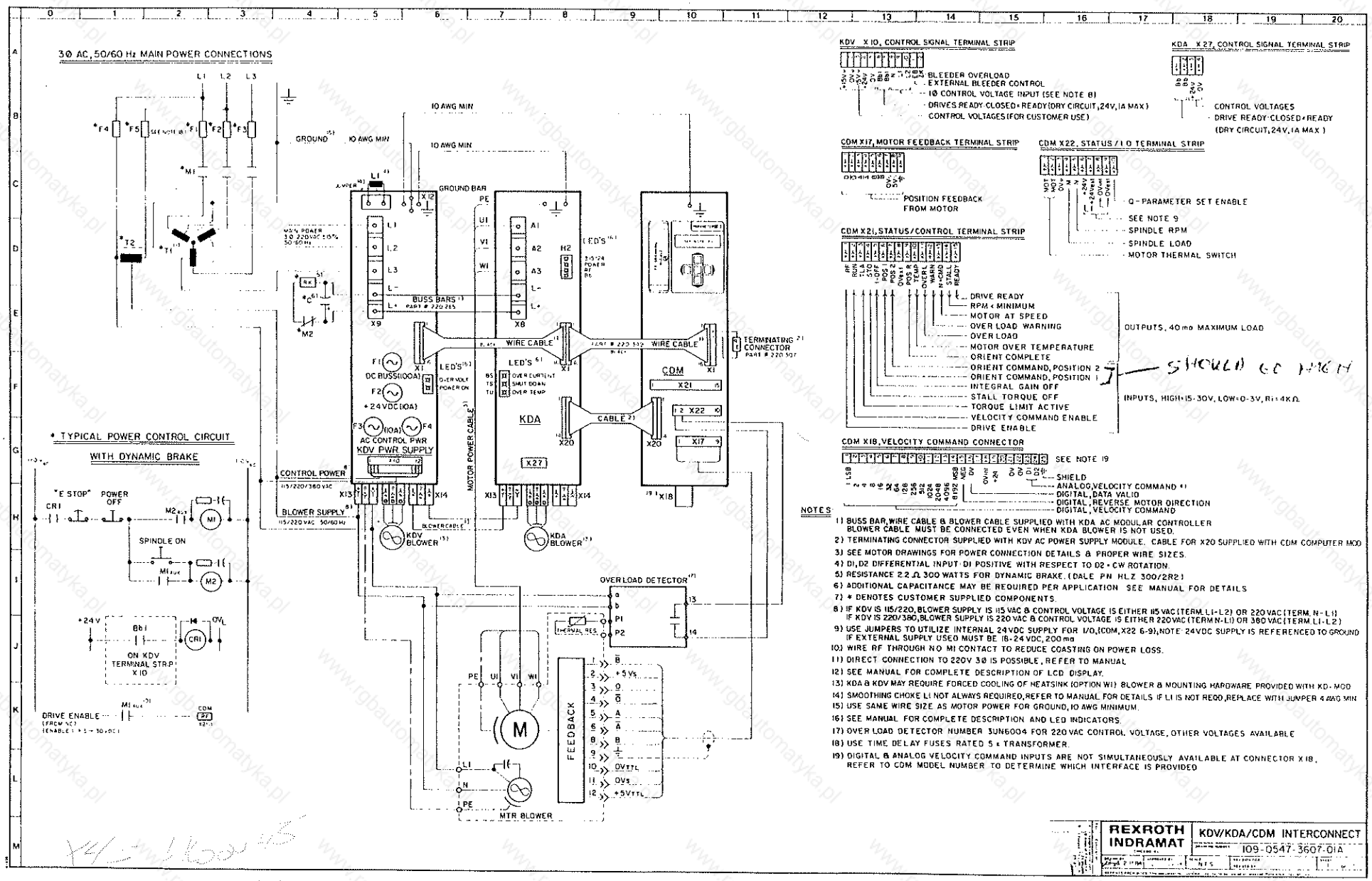

NOTES:

1) BUSS BAR, WIRE CABLE & BLOWER CABLE SUPPLIED WITH KDA AC MODULAR CONTROLLER. BLOWER CABLE MUST BE CONNECTED EVEN WHEN KDA BLOWER IS NOT USED.
2) TERMINATING CONNECTOR SUPPLIED WITH KDV AC POWER SUPPLY MODULE. CABLE FOR X20 SUPPLIED WITH CDM COMPUTER MOD
3) SEE MOTOR DRAWINGS FOR POWER CONNECTION DETAILS & PROPER WIRE SIZES.
4) D1, D2 DIFFERENTIAL INPUT: D1 POSITIVE WITH RESPECT TO D2 = CW ROTATION.
5) RESISTANCE 2.2 Ω 300 WATTS FOR DYNAMIC BRAKE. (DALE PN HLZ 300/2R2)
6) ADDITIONAL CAPACITANCE MAY BE REQUIRED PER APPLICATION. SEE MANUAL FOR DETAILS
7) * DENOTES CUSTOMER SUPPLIED COMPONENTS.
8) IF KDV IS 115/220, BLOWER SUPPLY IS 115 VAC & CONTROL VOLTAGE IS EITHER 115 VAC (TERM. L1-L2) OR 220 VAC (TERM. N-L1). IF KDV IS 220/380, BLOWER SUPPLY IS 220 VAC & CONTROL VOLTAGE IS EITHER 220 VAC (TERM N-L1) OR 380 VAC (TERM L1-L2)
9) USE JUMPERS TO UTILIZE INTERNAL 24 VDC SUPPLY FOR I/O, (COM, X22 6-9), NOTE: 24 VDC SUPPLY IS REFERENCED TO GROUND. IF EXTERNAL SUPPLY USED MUST BE 18-24 VDC, 200 ma
10) WIRE RF THROUGH N.O. MI CONTACT TO REDUCE COASTING ON POWER LOSS.
11) DIRECT CONNECTION TO 220V 3Ø IS POSSIBLE, REFER TO MANUAL
12) SEE MANUAL FOR COMPLETE DESCRIPTION OF LCD DISPLAY.
13) KDA & KDV MAY REQUIRE FORCED COOLING OF HEATSINK (OPTION W1) BLOWER & MOUNTING HARDWARE PROVIDED WITH KD- MOD
14) SMOOTHING CHOKE L1 NOT ALWAYS REQUIRED, REFER TO MANUAL FOR DETAILS IF L1 IS NOT REQD, REPLACE WITH JUMPER 4 AWG MIN
15) USE SAME WIRE SIZE AS MOTOR POWER FOR GROUND, 10 AWG MINIMUM.
16) SEE MANUAL FOR COMPLETE DESCRIPTION AND LED INDICATORS.
17) OVER LOAD DETECTOR NUMBER 3UN6004 FOR 220 VAC CONTROL VOLTAGE, OTHER VOLTAGES AVAILABLE
18) USE TIME DELAY FUSES RATED 5 x TRANSFORMER.
19) DIGITAL & ANALOG VELOCITY COMMAND INPUTS ARE NOT SIMULTANEOUSLY AVAILABLE AT CONNECTOR X18, REFER TO CDM MODEL NUMBER TO DETERMINE WHICH INTERFACE IS PROVIDED

REXROTH INDRAMAT	KDV/KDA/CDM INTERCONNECT
	109-0547-3607-01A

APPENDIX A. SPECIFICATIONS

A.1 KDV POWER SUPPLY MODULE

TABLE A-1. KDV POWER SECTION SPECIFICATIONS

Parameter	Symbol	Units	POWER SUPPLY MODEL NUMBER 1.3-100-220/300-W1
Input voltage			
- rated value	Vin 60 Hz	VAC, 3-phase,	220
- tolerance	--	%	±15%
Output voltage			
- rated value	Vo	VDC	300
- tolerance	--	%	±15%
Output current			
- rated value	In	Amps	100
- peak value (300 ms)	Ip	Amps	300
Power rating	Ptyp	KVA	30
		HP	40
Maximum power dissipation (within cabinet)	Pd	Watts	150
Bleeder circuit			
- peak power dissipation	Pp	KW	40
- continuous power dissipation	Pc	KW	2
Weight	--	lbs	45
		kg	20.4

Note: All specifications are subject to change without notice.

TABLE A-2. KDV CONTROL VOLTAGE SUPPLIES SPECIFICATION

Input	Voltage (Volts)	Power Supply Model Number KDV 1.3-100-220/300-W1 Current (Amps)	Tolerance (%)
115/220	115	4.8	+15/-10
	220	2.5	+15/-10
220/380	220	2.5	+15/-10
	220	1.5	+15/-10

Output Voltage	Voltage (Volts)	Current (Amps)	Ripple (%)
+24 VL	22.5 - 32	8	10
+15 VM	14.75- 15.25	1.5	2
-15 VM	-14.75-15.25	1.2	2

Note: All specifications are subject to change without notice.

APPENDIX B. TYPE NUMBERS

B.1 KDV POWER SUPPLY MODULE

The model number of the KDV may be decoded as follows:

```
                                                  KDV 1.3-100-220/300-W1/115/220
                                                   :  : :  :   :   :  ::    :
                                                   :  : :  :   :   :  ::    :
Model name.........................................:  : :  :   :   :  ::    :
                                                      : :  :   :   :  ::    :
Series.............................................: :  :   :   :  ::    :
                                                       :  :   :   :  ::    :
Version............................................:   :   :   :  ::    :
                                                          :   :   :  ::    :
Continuous Current = 100 amps.............................:   :   :  ::    :
                                                              :   :  ::    :
3-phase input voltage = 220 VAC...............................:   :  ::    :
                                                                  :  ::    :
DC output bus voltage = 300 VDC...................................:  ::    :
                                                                     ::    :
W = Panel mount.......................................................::    :
                                                                      :    :
0 = Convection cooled.................................................:    :
(not for use with AC Spindle).........................................:    :
1 = Blower cooled.....................................................:    :
                                                                           :
Fan/Control voltage                                                        :
available options:                                                         :
115/220 = 115 VAC fan voltage                                              :
          115 or 220 VAC control voltage...................................:
220/380 = 220 VAC fan voltage
          220 or 380 VAC control voltage
```

B.2 KDA ASYNCHRONOUS DRIVE MODULE

The model number of the KDA may be decoded as follows:

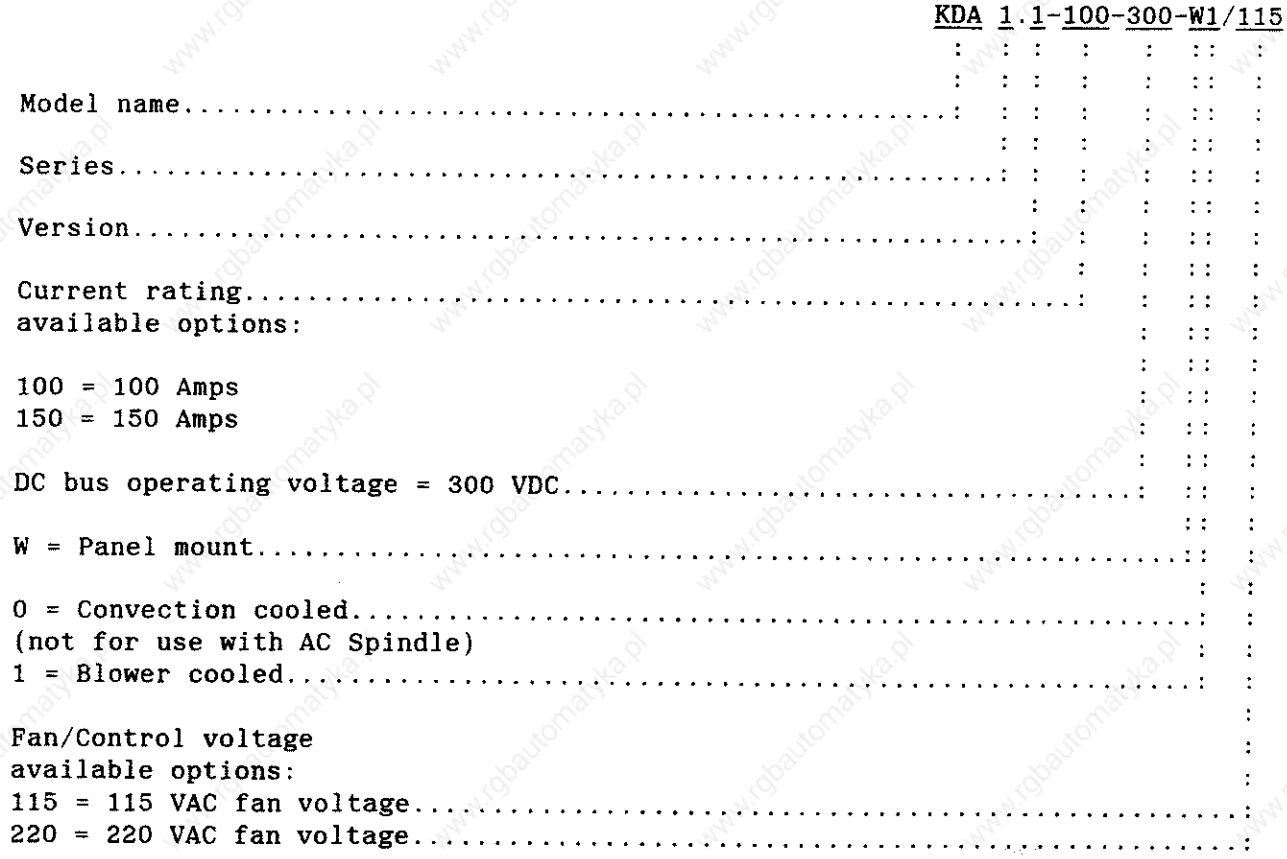

B.3 CDM COMPUTER DRIVE MODULE

The model number of the CDM may be decoded as follows:

```
                                                                  CDM 1.4-D
                                                                   :  : : :
                                                                   :  : : :
Model name.......................................................:  : : :
                                                                      : : :
Series...........................................................:  : :
                                                                        : :
Version.........................................................:  :
                                                                        :
Type velocity command input                                             :
available options:                                                      :
A  = Analog differential.........................................:
D  = Parallel digital interface..................................:
```

B.4 AS2 PROGRAMMING MODULE

The version of personality module may be decoded as follows:

```
                                                                  AS 2/003-D
                                                                   : :  :  :
                                                                   : :  :  :
Program module...................................................: :  :  :
                                                                    :  :  :
Series...........................................................:  :  :
                                                                      :  :
Version.........................................................:  :
                                                                        :
Command Input...................................................:
 A = Analog differential
 D = Parallel digital interface
```

APPENDIX C. PARAMETER LIST

VECTOR CONTROLLED AC SPINDLE DRIVE WITH ASYNCHRONOUS MOTOR

C.1 PARAMETER LIST FOR PROGRAM MODULE AS 2/001

Parameters for Performance Curve 106-0129-4103-00/017-01

Software: CDM 06-003.X
Computer Module: CDM 1.4
Controller: KDA 1.1-100-300-W1-...
Motor: 1AD 132M-B...-4A011-....
Winding/Voltage: Delta/127VAC

PARAMETER	TYPE	RANGE	SETTING P	SETTING Q
00 MAX RPM	A *	1000 - 6999 @	5667	BASE PARAMETER
01 MIN RPM	A	1 - 500	150	
02 MAX DEV	A	1 - 200	99	
03 RAMP 1	A	1 - 999	999	
04 RPM 1	A	1 - 6000	1	
05 RAMP 2	A	1 - 999	999	
06 RPM 2	A	1 - 6000	2000	
07 RAMP 3	A	1 - 999	999	
08 SMOOTH	A	0 - 7	3	
09 RED TORQ	A	1 - 99	65	
10 POS GAIN	A	1 - 200	20	
11 OFFSET	A	0.0 - 360.0	0.00	
12 P-GAIN	A/I	0.00 - 2.00	0.40	
13 I-GAIN	A/I	0.7 - 0.99	0.04	
14 GAIN RPM	A/I	0 - 6000	500	
15 P-GAIN 2	A/I	0.00 - 2.00	0.20	
16 I-GAIN 2	A/I	0.0 - .99	0.03	
17 POLES	I	2, 4, 6	4	
18 SIGN SLIP	I	2 - 200	65	
19 SIGN RPM	I	500 - 6000	1500	
20 MAX SLIP	I	5 - 200	160	
21 FLUX	I	0 - 199	25	
22 CURRENT	I	0.0 - 9.9	0.80	
23 ANGLE	I	0.0 - 2.0	0.70	
24 WARN TORQ	I	1 - 99	65	

*) A = Application Parameter
I = Non-changeable Parameter

@) MAX RPM sets the comand to equal 10 volts at MAX RPM.
DO NOT EXCEED THE SPEED RATING ON THE MOTOR NAMEPLATE!!

APPENDIX C. PARAMETER LIST

VECTOR CONTROLLED AC SPINDLE DRIVE WITH ASYNCHRONOUS MOTOR

C.2 PARAMETER LIST FOR PROGRAM MODULE AS 2/002

Software: CDM 06-004.X
Computer Module: CDM 1.4
Controller: KDA 1.1-150-300-W1-...
Motor: 1AD 160M-B...-4A101-....
Winding/Voltage: Delta/127VAC

PARAMETER	TYPE	RANGE	SETTING P	SETTING Q
00 MAX RPM	A *	1000 - 6999 @	4444	BASE PARAMETER
01 MIN RPM	A	1 - 500	100	
02 MAX DEV	A	1 - 200	99	
03 RAMP 1	A	1 - 999	999	
04 RPM 1	A	1 - 6000	1	
05 RAMP 2	A	1 - 999	999	
06 RPM 2	A	1 - 6000	3000	
07 RAMP 3	A	1 - 999	700	
08 SMOOTH	A	0 - 7	4	
09 RED TORQ	A	1 - 99	60	
10 POS GAIN	A	1 - 200	20	
11 OFFSET	A	0.0 - 360.0	0.00	
12 P-GAIN	A/I	0.00 - 2.00	0.15	
13 I-GAIN	A/I	0.7 - 0.99	0.01	
14 GAIN RPM	A/I	0 - 6000	500	
15 P-GAIN 2	A/I	0.00 - 2.00	0.15	
16 I-GAIN 2	A/I	0.0 - .99	0.01	
17 POLES	I	2, 4, 6	4	
18 SIGN SLIP	I	2 - 200	45	
19 SIGN RPM	I	500 - 6000	2200	
20 MAX SLIP	I	5 - 200	150	
21 FLUX	I	0 - 199	40	
22 CURRENT	I	0.0 - 9.9	0.90	
23 ANGLE	I	0.0 - 2.0	0.80	
24 WARN TORQ	I	1 - 99	60	

*) A = Application Parameter
I = Non-changeable Parameter

@) MAX RPM sets the comand to equal 10 volts at MAX RPM.
DO NOT EXCEED THE SPEED RATING ON THE MOTOR NAMEPLATE!!

APPENDIX C. PARAMETER LIST

VECTOR CONTROLLED AC SPINDLE DRIVE WITH ASYNCHRONOUS MOTOR

C.3 PARAMETER LIST FOR PROGRAM MODULE AS 2/003

Parameters for Performance Curve 106-0129-4103-00/014-01

Software: CDM 06-003.X
Computer Module: CDM 1.4
Controller: KDA 1.1-150-300-W1-...
Motor: 1AD 160M-B...-4A111-....
Winding/Voltage: Delta/127VAC

PARAMETER	TYPE	RANGE	SETTING P	SETTING Q
00 MAX RPM	A *	1000 - 6999 @	6000	BASE PARAMETER
01 MIN RPM	A	1 - 500	20	
02 MAX DEV	A	1 - 200	20	
03 RAMP 1	A	1 - 999	999	
04 RPM 1	A	1 - 6000	1	
05 RAMP 2	A	1 - 999	999	
06 RPM 2	A	1 - 6000	2000	
07 RAMP 3	A	1 - 999	999	
08 SMOOTH	A	0 - 7	3	
09 RED TORQ	A	1 - 99	10	
10 POS GAIN	A	1 - 200	20	
11 OFFSET	A	0.0 - 360.0	0.00	
12 P-GAIN	A/I	0.00 - 2.00	0.30	
13 I-GAIN	A/I	0.7 - 0.99	0.02	
14 GAIN RPM	A/I	0 - 6000	6000	
15 P-GAIN 2	A/I	0.00 - 2.00	0.30	
16 I-GAIN 2	A/I	0.0 - .99	0.02	
17 POLES	I	2, 4, 6	4	
18 SIGN SLIP	I	2 - 200	50	
19 SIGN RPM	I	500 - 6000	2200	
20 MAX SLIP	I	5 - 200	150	
21 FLUX	I	0 - 199	40	
22 CURRENT	I	0.0 - 9.9	0.80	
23 ANGLE	I	0.0 - 2.0	0.80	
24 WARN TORQ	I	1 - 99	55	

*) A = Application Parameter
I = Non-changeable Parameter

@) MAX RPM sets the comand to equal 10 volts at MAX RPM.
DO NOT EXCEED THE SPEED RATING ON THE MOTOR NAMEPLATE!!

APPENDIX C. PARAMETER LIST

VECTOR CONTROLLED AC SPINDLE DRIVE WITH ASYNCHRONOUS MOTOR

C.4 PARAMETER LIST FOR PROGRAM MODULE AS 2/004

Parameters for Performance Curve 106-0129-4103-00/017-01

Software: CDM 06-004.X
Computer Module: CDM 1.4
Controller: KDA 1.1-100-300-W1-...
Motor: 1AD 132M-B...-4A111-....
Winding/Voltage: Delta/127VAC

PARAMETER	TYPE	RANGE	SETTING P	SETTING Q
00 MAX RPM	A *	1000 - 6999 @	6000	BASE PARAMETER
01 MIN RPM	A	1 - 500	20	
02 MAX DEV	A	1 - 200	20	
03 RAMP 1	A	1 - 999	999	
04 RPM 1	A	1 - 6000	1	
05 RAMP 2	A	1 - 999	999	
06 RPM 2	A	1 - 6000	2000	
07 RAMP 3	A	1 - 999	999	
08 SMOOTH	A	0 - 7	3	
09 RED TORQ	A	1 - 99	10	
10 POS GAIN	A	1 - 200	20	
11 OFFSET	A	0.0 - 360.0	0.00	
12 P-GAIN	A/I	0.00 - 2.00	0.30	
13 I-GAIN	A/I	0.7 - 0.99	0.03	
14 GAIN RPM	A/I	0 - 6000	6000	
15 P-GAIN 2	A/I	0.00 - 2.00	0.30	
16 I-GAIN 2	A/I	0.0 - .99	0.03	
17 POLES	I	2, 4, 6	4	
18 SIGN SLIP	I	2 - 200	45	
19 SIGN RPM	I	500 - 6000	2300	
20 MAX SLIP	I	5 - 200	100	
21 FLUX	I	0 - 199	25	
22 CURRENT	I	0.0 - 9.9	1.20	
23 ANGLE	I	0.0 - 2.0	0.80	
24 WARN TORQ	I	1 - 99	65	

*) A = Application Parameter
I = Non-changeable Parameter

@) MAX RPM sets the comand to equal 10 volts at MAX RPM.
DO NOT EXCEED THE SPEED RATING ON THE MOTOR NAMEPLATE!!

APPENDIX C. PARAMETER LIST

VECTOR CONTROLLED AC SPINDLE DRIVE WITH ASYNCHRONOUS MOTOR

C.5 PARAMETER LIST FOR PROGRAM MODULE AS 2/010

Parameters for Performance Curve 106-0129-4103-00/025-01

Software: CDM 06-004.X
Computer Module: CDM 1.4
Controller: KDA 1.1-150-300-W1-...
Motor: 1AD 180L-B...-4A101-....
Winding/Voltage: Wye/220VAC

PARAMETER	TYPE	RANGE	SETTING P	SETTING Q
00 MAX RPM	A *	1000 - 6999 @	4000	BASE PARAMETER
01 MIN RPM	A	1 - 500	20	
02 MAX DEV	A	1 - 200	20	
03 RAMP 1	A	1 - 999	999	
04 RPM 1	A	1 - 6000	1	
05 RAMP 2	A	1 - 999	999	
06 RPM 2	A	1 - 6000	1500	
07 RAMP 3	A	1 - 999	999	
08 SMOOTH	A	0 - 7	3	
09 RED TORQ	A	1 - 99	10	
10 POS GAIN	A	1 - 200	20	
11 OFFSET	A	0.0 - 360.0	0.00	
12 P-GAIN	A/I	0.00 - 2.00	0.50	
13 I-GAIN	A/I	0.7 - 0.99	0.05	
14 GAIN RPM	A/I	0 - 6000	6000	
15 P-GAIN 2	A/I	0.00 - 2.00	0.50	
16 I-GAIN 2	A/I	0.0 - .99	0.05	
17 POLES	I	2, 4, 6	4	
18 SIGN SLIP	I	2 - 200	40	
19 SIGN RPM	I	500 - 6000	1100	
20 MAX SLIP	I	5 - 200	200	
21 FLUX	I	0 - 199	40	
22 CURRENT	I	0.0 - 9.9	1.00	
23 ANGLE	I	0.0 - 2.0	1.00	
24 WARN TORQ	I	1 - 99	70	

*) A = Application Parameter
I = Non-changeable Parameter

@) MAX RPM sets the comand to equal 10 volts at MAX RPM.
DO NOT EXCEED THE SPEED RATING ON THE MOTOR NAMEPLATE!!

APPENDIX C. PARAMETER LIST

VECTOR CONTROLLED AC SPINDLE DRIVE WITH ASYNCHRONOUS MOTOR

C.6 PARAMETER LIST FOR PROGRAM MODULE AS 2/011

Parameters for Performance Curve 106-0129-4103-00/026-01

Software: CDM 06-007.X
Computer Module: CDM 1.4
Controller: KDA 1.1-100-300-W1-...
Motor: 1AD 160L-B...-4A111-....
Winding/Voltage: Wye/220VAC

PARAMETER	TYPE	RANGE	SETTING P	SETTING Q
00 MAX RPM	A *	1000 - 6999 @	4000	BASE PARAMETER
01 MIN RPM	A	1 - 500	20	
02 MAX DEV	A	1 - 200	20	
03 RAMP 1	A	1 - 999	999	
04 RPM 1	A	1 - 6000	1	
05 RAMP 2	A	1 - 999	999	
06 RPM 2	A	1 - 6000	1500	
07 RAMP 3	A	1 - 999	999	
08 SMOOTH	A	0 - 7	3	
09 RED TORQ	A	1 - 99	10	
10 POS GAIN	A	1 - 200	20	
11 OFFSET	A	0.0 - 360.0	0.00	
12 P-GAIN	A/I	0.00 - 2.00	0.30	
13 I-GAIN	A/I	0.7 - 0.99	0.02	
14 GAIN RPM	A/I	0 - 6000	6000	
15 P-GAIN 2	A/I	0.00 - 2.00	0.30	
16 I-GAIN 2	A/I	0.0 - .99	0.02	
17 POLES	I	2, 4, 6	4	
18 SIGN SLIP	I	2 - 200	40	
19 SIGN RPM	I	500 - 6000	1200	
20 MAX SLIP	I	5 - 200	150	
21 FLUX	I	0 - 199	25	
22 CURRENT	I	0.0 - 9.9	2.20	
23 ANGLE	I	0.0 - 2.0	0.90	
24 WARN TORQ	I	1 - 99	71	

*) A = Application Parameter
I = Non-changeable Parameter

@) MAX RPM sets the comand to equal 10 volts at MAX RPM.
DO NOT EXCEED THE SPEED RATING ON THE MOTOR NAMEPLATE!!

VECTOR CONTROLLED AC SPINDLE DRIVE WITH ASYNCHRONOUS MOTOR

C.7 PARAMETER LIST FOR PROGRAM MODULE AS 2/012

Parameters for Performance Curve 106-0129-4103-00/027-01

Software: CDM 06-004.X
Computer Module: CDM 1.4
Controller: KDA 1.1-150-300-W1-...
Motor: 1AD 160L-B...-4A111-....
Winding/Voltage: Wye/220VAC

PARAMETER	TYPE	RANGE	SETTING P	SETTING Q
00 MAX RPM	A *	1000 - 6999 @	4000	BASE PARAMETER
01 MIN RPM	A	1 - 500	20	
02 MAX DEV	A	1 - 200	20	
03 RAMP 1	A	1 - 999	999	
04 RPM 1	A	1 - 6000	1	
05 RAMP 2	A	1 - 999	999	
06 RPM 2	A	1 - 6000	1500	
07 RAMP 3	A	1 - 999	600	
08 SMOOTH	A	0 - 7	3	
09 RED TORQ	A	1 - 99	10	
10 POS GAIN	A	1 - 200	20	
11 OFFSET	A	0.0 - 360.0	0.00	
12 P-GAIN	A/I	0.00 - 2.00	0.30	
13 I-GAIN	A/I	0.7 - 0.99	0.03	
14 GAIN RPM	A/I	0 - 6000	6000	
15 P-GAIN 2	A/I	0.00 - 2.00	0.30	
16 I-GAIN 2	A/I	0.0 - .99	0.03	
17 POLES	I	2, 4, 6	4	
18 SIGN SLIP	I	2 - 200	50	
19 SIGN RPM	I	500 - 6000	1000	
20 MAX SLIP	I	5 - 200	150	
21 FLUX	I	0 - 199	25	
22 CURRENT	I	0.0 - 9.9	0.90	
23 ANGLE	I	0.0 - 2.0	0.60	
24 WARN TORQ	I	1 - 99	55	

*) A = Application Parameter
I = Non-changeable Parameter

@) MAX RPM sets the comand to equal 10 volts at MAX RPM.
DO NOT EXCEED THE SPEED RATING ON THE MOTOR NAMEPLATE!!

APPENDIX C. PARAMETER LIST

VECTOR CONTROLLED AC SPINDLE DRIVE WITH ASYNCHRONOUS MOTOR

C.8 PARAMETER LIST FOR PROGRAM MODULE AS 2/013

Parameters for Performance Curve 106-0129-4103-00/015-01

Software: CDM 06-004.X
Computer Module: CDM 1.4
Controller: KDA 1.1-150-300-W1-...
Motor: 1AD 160L-B...-4A111-....
Winding/Voltage: Delta/127VAC

PARAMETER	TYPE	RANGE	SETTING P	SETTING Q
00 MAX RPM	A *	1000 - 6999 @	6000	BASE PARAMETER
01 MIN RPM	A	1 - 500	20	
02 MAX DEV	A	1 - 200	20	
03 RAMP 1	A	1 - 999	999	
04 RPM 1	A	1 - 6000	1	
05 RAMP 2	A	1 - 999	999	
06 RPM 2	A	1 - 6000	3000	
07 RAMP 3	A	1 - 999	500	
08 SMOOTH	A	0 - 7	3	
09 RED TORQ	A	1 - 99	10	
10 POS GAIN	A	1 - 200	20	
11 OFFSET	A	0.0 - 360.0	0.00	
12 P-GAIN	A/I	0.00 - 2.00	0.30	
13 I-GAIN	A/I	0.7 - 0.99	0.02	
14 GAIN RPM	A/I	0 - 6000	6000	
15 P-GAIN 2	A/I	0.00 - 2.00	0.30	
16 I-GAIN 2	A/I	0.0 - .99	0.02	
17 POLES	I	2, 4, 6	4	
18 SIGN SLIP	I	2 - 200	36	
19 SIGN RPM	I	500 - 6000	2200	
20 MAX SLIP	I	5 - 200	150	
21 FLUX	I	0 - 199	43	
22 CURRENT	I	0.0 - 9.9	1.10	
23 ANGLE	I	0.0 - 2.0	1.20	
24 WARN TORQ	I	1 - 99	80	

*) A = Application Parameter
I = Non-changeable Parameter

@) MAX RPM sets the comand to equal 10 volts at MAX RPM.
DO NOT EXCEED THE SPEED RATING ON THE MOTOR NAMEPLATE!!

APPENDIX C. PARAMETER LIST

VECTOR CONTROLLED AC SPINDLE DRIVE WITH ASYNCHRONOUS MOTOR

C.9 PARAMETER LIST FOR PROGRAM MODULE AS 2/014

Parameters for Performance Curve 106-0129-4103-00/028-01

Software: CDM 06-007.X
Computer Module: CDM 1.4
Controller: KDA 1.1-100-300-W1-...
Motor: 1AD 160M-B...-4A111-....
Winding/Voltage: Wye/220VAC

PARAMETER	TYPE	RANGE	SETTING P	SETTING Q
00 MAX RPM	A *	1000 - 6999 @	4000	BASE PARAMETER
01 MIN RPM	A	1 - 500	20	
02 MAX DEV	A	1 - 200	20	
03 RAMP 1	A	1 - 999	999	
04 RPM 1	A	1 - 6000	1	
05 RAMP 2	A	1 - 999	999	
06 RPM 2	A	1 - 6000	1500	
07 RAMP 3	A	1 - 999	999	
08 SMOOTH	A	0 - 7	3	
09 RED TORQ	A	1 - 99	10	
10 POS GAIN	A	1 - 200	20	
11 OFFSET	A	0.0 - 360.0	0.00	
12 P-GAIN	A/I	0.00 - 2.00	0.30	
13 I-GAIN	A/I	0.7 - 0.99	0.03	
14 GAIN RPM	A/I	0 - 6000	6000	
15 P-GAIN 2	A/I	0.00 - 2.00	0.30	
16 I-GAIN 2	A/I	0.0 - .99	0.03	
17 POLES	I	2, 4, 6	4	
18 SIGN SLIP	I	2 - 200	65	
19 SIGN RPM	I	500 - 6000	1500	
20 MAX SLIP	I	5 - 200	160	
21 FLUX	I	0 - 199	25	
22 CURRENT	I	0.0 - 9.9	1.20	
23 ANGLE	I	0.0 - 2.0	1.20	
24 WARN TORQ	I	1 - 99	60	

*) A = Application Parameter
I = Non-changeable Parameter

@) MAX RPM sets the comand to equal 10 volts at MAX RPM.
DO NOT EXCEED THE SPEED RATING ON THE MOTOR NAMEPLATE!!

APPENDIX C. PARAMETER LIST

VECTOR CONTROLLED AC SPINDLE DRIVE WITH ASYNCHRONOUS MOTOR

C.10 PARAMETER LIST FOR PROGRAM MODULE AS 2/015

Parameters for Performance Curve 106-0129-4103-00/029-01

Software: CDM 06-009.X
Computer Module: CDM 1.4
Controller: KDA 1.1-150-300-W1-...
Motor: 1AD 160M-B...-4A111-....
Winding/Voltage: Wye/220VAC

PARAMETER	TYPE	RANGE	SETTING P	SETTING Q
00 MAX RPM	A *	1000 - 6999 @	4000	BASE PARAMETER
01 MIN RPM	A	1 - 500	20	
02 MAX DEV	A	1 - 200	20	
03 RAMP 1	A	1 - 999	999	
04 RPM 1	A	1 - 6000	1	
05 RAMP 2	A	1 - 999	999	
06 RPM 2	A	1 - 6000	1500	
07 RAMP 3	A	1 - 999	999	
08 SMOOTH	A	0 - 7	3	
09 RED TORQ	A	1 - 99	10	
10 POS GAIN	A	1 - 200	20	
11 OFFSET	A	0.0 - 360.0	0.00	
12 P-GAIN	A/I	0.00 - 2.00	0.30	
13 I-GAIN	A/I	0.7 - 0.99	0.03	
14 GAIN RPM	A/I	0 - 6000	6000	
15 P-GAIN 2	A/I	0.00 - 2.00	0.30	
16 I-GAIN 2	A/I	0.0 - .99	0.03	
17 POLES	I	2, 4, 6	4	
18 SIGN SLIP	I	2 - 200	80	
19 SIGN RPM	I	500 - 6000	1100	
20 MAX SLIP	I	5 - 200	200	
21 FLUX	I	0 - 199	23	
22 CURRENT	I	0.0 - 9.9	1.50	
23 ANGLE	I	0.0 - 2.0	0.70	
24 WARN TORQ	I	1 - 99	3	

*) A = Application Parameter
I = Non-changeable Parameter

@) MAX RPM sets the comand to equal 10 volts at MAX RPM.
DO NOT EXCEED THE SPEED RATING ON THE MOTOR NAMEPLATE!!

APPENDIX C. PARAMETER LIST

VECTOR CONTROLLED AC SPINDLE DRIVE WITH ASYNCHRONOUS MOTOR

C.11 PARAMETER LIST FOR PROGRAM MODULE AS 2/016

Parameters for Performance Curve 106-0129-4103-00/030-01

Software: CDM 06-004.X
Computer Module: CDM 1.4
Controller: KDA 1.1-150-300-W1-...
Motor: 1AD 180M-B...-4A111-....
Winding/Voltage: Wye/220VAC

PARAMETER	TYPE	RANGE	SETTING P	SETTING Q
00 MAX RPM	A *	1000 - 6999 @	4000	BASE PARAMETER
01 MIN RPM	A	1 - 500	20	
02 MAX DEV	A	1 - 200	20	
03 RAMP 1	A	1 - 999	999	
04 RPM 1	A	1 - 6000	1	
05 RAMP 2	A	1 - 999	500	
06 RPM 2	A	1 - 6000	1000	
07 RAMP 3	A	1 - 999	400	
08 SMOOTH	A	0 - 7	3	
09 RED TORQ	A	1 - 99	10	
10 POS GAIN	A	1 - 200	20	
11 OFFSET	A	0.0 - 360.0	0.00	
12 P-GAIN	A/I	0.00 - 2.00	0.40	
13 I-GAIN	A/I	0.7 - 0.99	0.05	
14 GAIN RPM	A/I	0 - 6000	6000	
15 P-GAIN 2	A/I	0.00 - 2.00	0.40	
16 I-GAIN 2	A/I	0.0 - .99	0.05	
17 POLES	I	2, 4, 6	4	
18 SIGN SLIP	I	2 - 200	45	
19 SIGN RPM	I	500 - 6000	1100	
20 MAX SLIP	I	5 - 200	170	
21 FLUX	I	0 - 199	30	
22 CURRENT	I	0.0 - 9.9	10	
23 ANGLE	I	0.0 - 2.0	0.80	
24 WARN TORQ	I	1 - 99	67	

*) A = Application Parameter
I = Non-changeable Parameter

@) MAX RPM sets the comand to equal 10 volts at MAX RPM.
DO NOT EXCEED THE SPEED RATING ON THE MOTOR NAMEPLATE!!

INDRAMAT AC SPINDLE DRIVE
PARAMETER LIST

Motor type: _____ Winding Type: _____ Delta _____ Wye

KDA _____ CDM _____

Programming Module Number: _____

KDV: _____ AC power voltage: ____ VAC

Parameter	Name	Value	Units
P00	MAX RPM	_____	RPM
P01	MIN RPM	_____	RPM
P02	MAX DEV	_____	RPM
P03	RAMP 1	_____	Rad/Sec^2
P04	RPM 1	_____	RPM
P05	RAMP 2	_____	Rad/Sec^2
P06	RPM 2	_____	RPM
P07	RAMP 3	_____	Rad/Sec^2
P08	SMOOTH	_____	
P09	RED TORQ	_____	%
P10	POS GAIN	_____	---
P11	OFFSET	_____	Degrees
P12	P-GAIN 1	_____	---
P13	I-GAIN 1	_____	---
P14	GAIN RPM	_____	RPM
P15	P-GAIN 2	_____	---
P16	I-GAIN 2	_____	---
P17	POLES	_____	---
P18	SIGN SLIP	_____	RPM
P19	SIGN RPM	_____	RPM
P20	MAX SLIP	_____	RPM
P21	FLUX	_____	Amperes
P22	CURRENT	_____	---
P23	ANGLE	_____	---
P24	WARN TORQ	_____	%

Remarks: _____

_____

_____

_____

_____

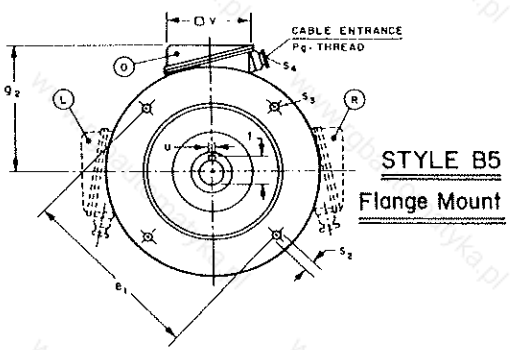

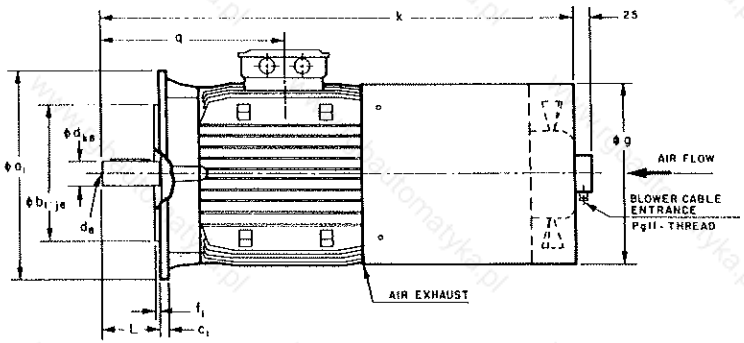

CONNECTION BOX LOCATION	STYLE B3 and B5 (FOOT and FLANGE)	STYLE B3, FRAME SIZE 180 and 200
(O) OVER	STANDARD	NOT AVAILABLE
(R) RIGHT	AVAILABLE	STANDARD
(L) LEFT	AVAILABLE	AVAILABLE

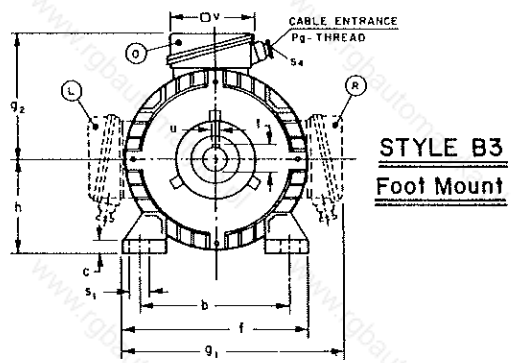

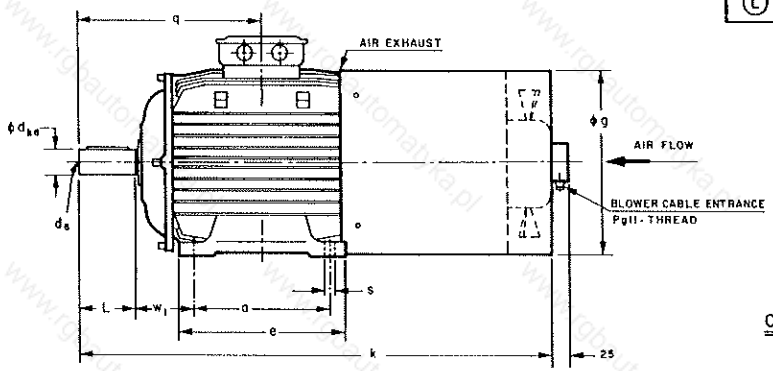

CONSTRUCTION: MOTOR AND SHAFT END PER IP 54
BLOWER PER IP 24.

NOTE: ALL DIMENSIONS SHOWN IN "mm"

FRAME SIZE	h	a	b	w_1	d	L	c	e	f	g	g_1	k	p	□v	q	s	s_1	t	u	g_2	a_1	b_1	e_1	c_1	f_1	s_2	s_3	s_4	d_5	TOLERANCES j6	TOLERANCES k6
1AD112M	112	140	190	70	28	60	15	176	235	220	292	575	260	120	200	13	16	30.9	8	178	250	180	215	11	4	14	4xM12	Pg21	M10	+0.016 −0.013	+0.015 +0.002
1AD132S	132	178	216	89	38	80	17	218	260	260	338	660	299	175	258		17	41.3	10	205	300	230	265	12					M12		
1AD132M																															
1AD160M	160	254	254	108	42	110	22	304	318	320	399	815	357		345	16	20	45.1	12	239	350	250	300	13	5	17	4xM16	Pg29	M16	+0.016 −0.016	+0.018 +0.002
1AD160L																															
1AD180M	180	279	279	121	48		26	339	360	360	480	855	410		371		23	51.5	14	300											
1AD180L																															
1AD 200L	200	305	318	133	55		34	385	400	400	540	910	460	225	396	20	33	58.8	16	335	400	300	350	15				Pg36	M20	+0.018 −0.018	+0.021 +0.002

FRAME SIZE		112M	132S	132M	160M	160L	180M	180L	200L
INERTIA	$kgm^2/lb\text{-}in\text{-}sec^2$	0.011 / 0.097	0.023 / 0.204	0.028 / 0.248	0.05 / 0.443	0.07 / 0.620	0.13 / 1.151	0.15 / 1.328	0.24 / 2.124
WEIGHT kg/lb	CAST IRON CONST						175 / 386	190 / 419	250 / 552
	ALUMINUM CONST	34 / 75	47 / 104	61 / 134	80 / 176	96 / 212			

REXROTH INDRAMAT
CHICAGO ILL

INDUCTION SPINDLE MOTOR

DRAWING NUMBER 106-0129-3001-11A

DRAWN BY	APPROVED BY	SCALE	REVISION FOR	SHEET
6-26-85	7-5-85	N.T.S.	REVISED BY	1 OF 1

REPRINTS PROHIBITED. This document for customer use, not to be copied or released. Reference copyright law.

61336

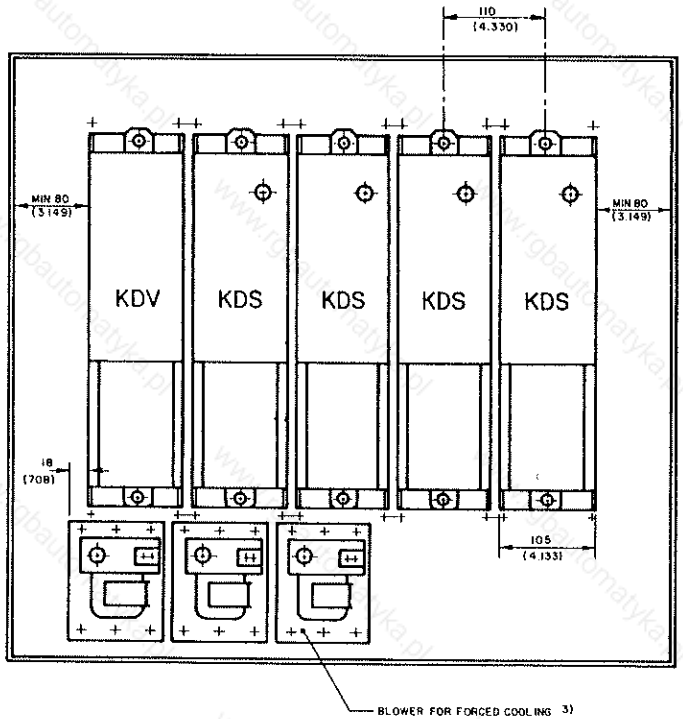

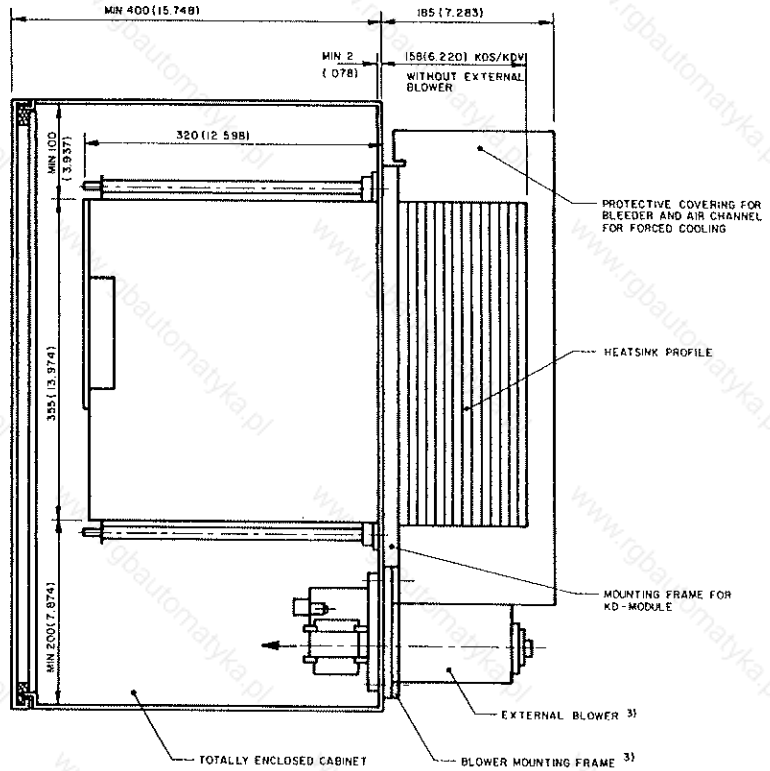

NOTES:

1) ALL DIMENSIONS SHOWN IN "mm", (INCHES) FOR REFERENCE ONLY
2) SEE DRAWING 109-0574-3003-01A FOR CABINET CUTOUT DIMENSIONS
3) REQUIRED ONLY FOR KD-MODULE WITH WI OPTION (BLOWER COOLED)

REXROTH INDRAMAT CHICAGO ILL	KD-MODULE MOUNTING W & W/O BLOWER				
	DRAWING NUMBER 109-0574-3004-01A				
DRAWN BY D.P 9-27-84	APPROVED BY [illegible] 9-27-84	SCALE 3/16" = 1"	REVISION FOR	REVISED BY	SHEET 1 OF 1

REPRINTS PROHIBITED. This document for customer use, not to be copied or released. Reference copyright law

61335

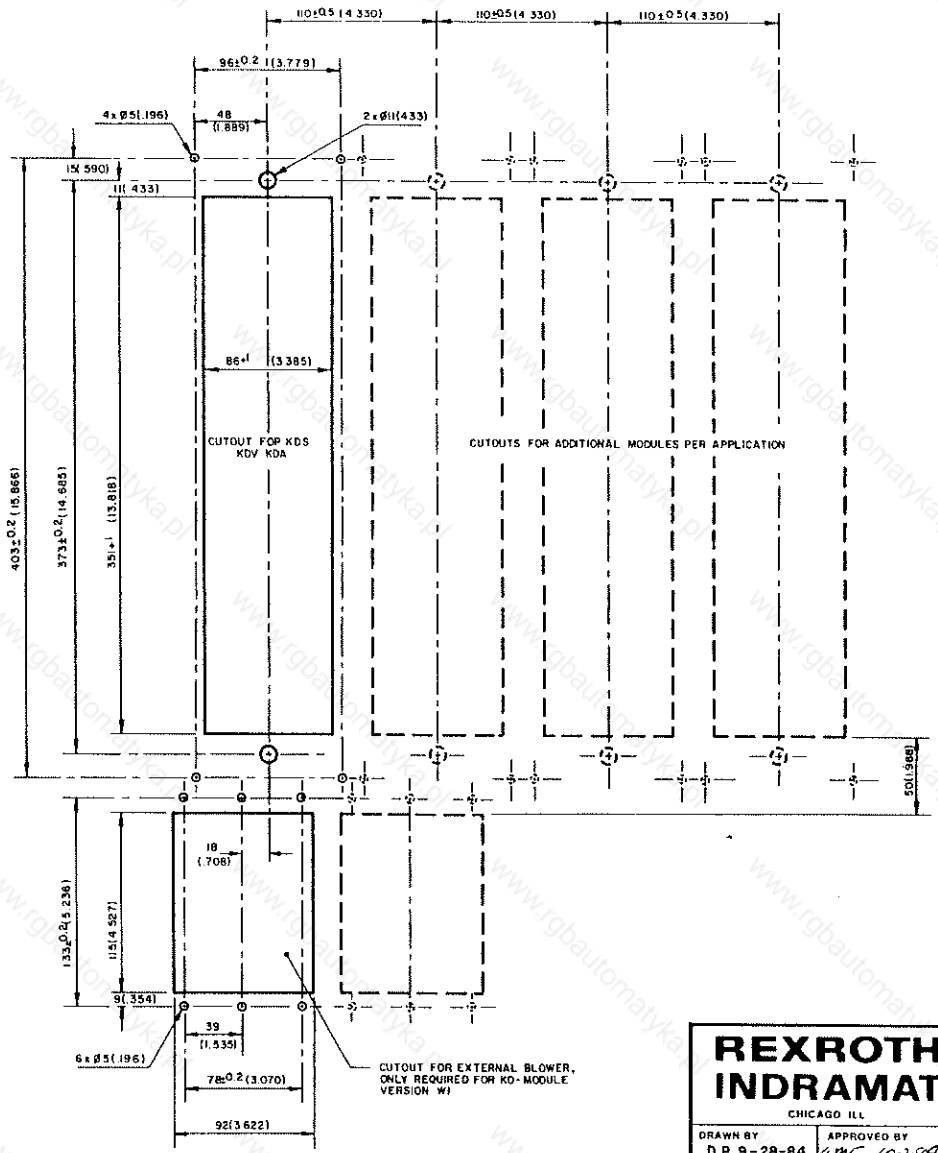

NOTES:

1) ALL DIMENSIONS SHOWN IN "mm", (INCHES) FOR REFERENCE ONLY
2) VIEW FROM INSIDE CABINET
3) SEE DRAWING 109-0574-3004-01A FOR EQUIPMENT MOUNTING

REXROTH INDRAMAT
CHICAGO ILL

CABINET CUTOUT, KD-MODULE

DRAWING NUMBER 109-0574-3003-01A

DRAWN BY	APPROVED BY	SCALE	REVISION FOR	SHEET
D.P. 9-28-84	[illegible] 10-2-84	5/16" = 1"	REVISED BY	1 OF 1

REPRINTS PROHIBITED. This document for customer use, not to be copied or released. Reference copyright law.

61336

NOTES

1) M4 & M8 ARE STANDARD METRIC THREADS
2) REQUIRED ONLY FOR KDV WITH WI OPTION (BLOWER COOLED)
3) MOUNTING HARDWARE INDRAMAT SUPPLIED
4.) XXX WILL BE EITHER 115V or 220V

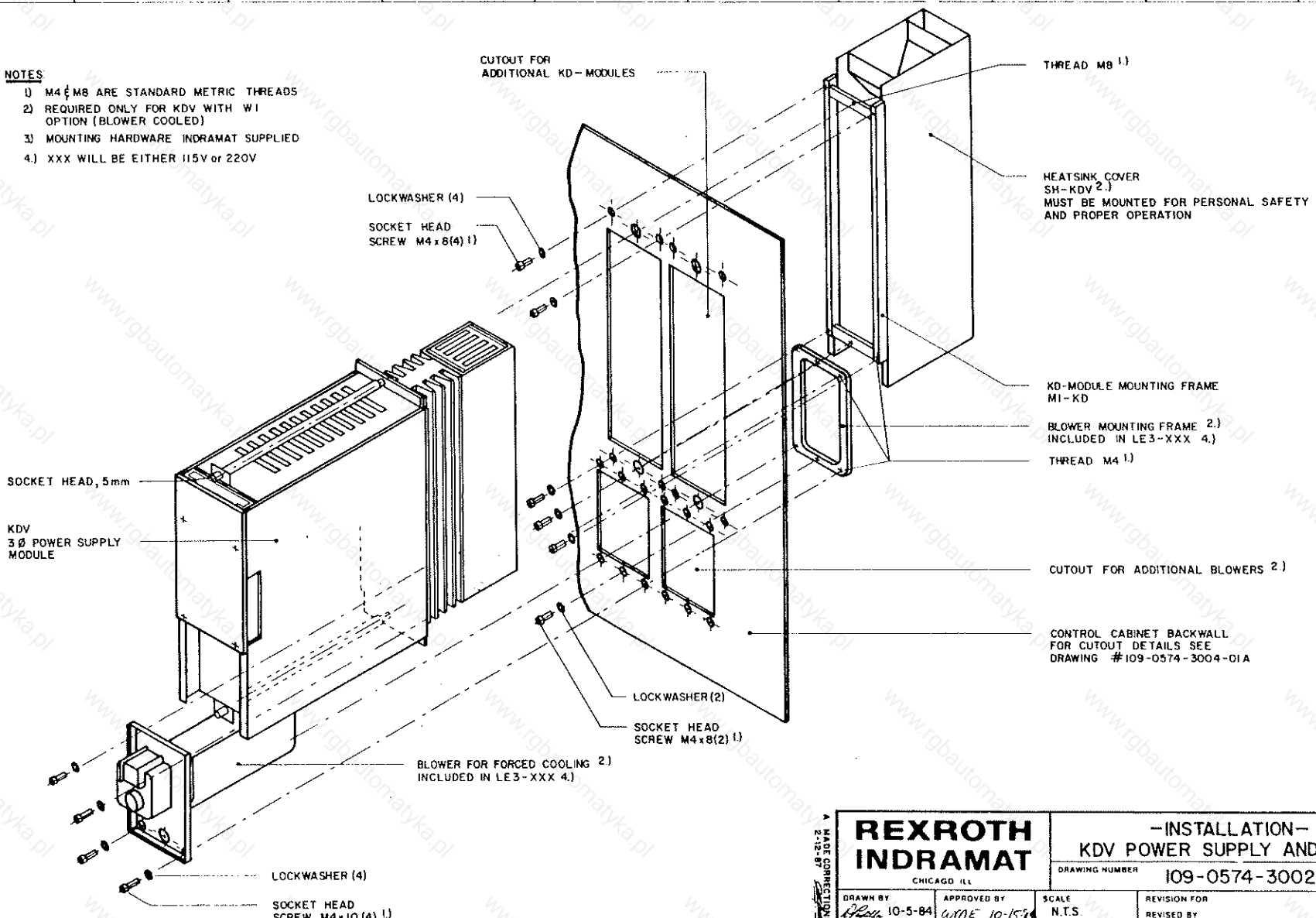

A MADE CORRECTIONS 2-12-87

REXROTH INDRAMAT
CHICAGO ILL

-INSTALLATION-
KDV POWER SUPPLY AND BLOWER

DRAWING NUMBER 109-0574-3002-01A

DRAWN BY	APPROVED BY	SCALE	REVISION FOR	SHEET
10-5-84	10-15-84	N.T.S.	REVISED BY	1 OF 1

REPRINTS PROHIBITED This document for customer use not to be copied or released. Reference copyright law

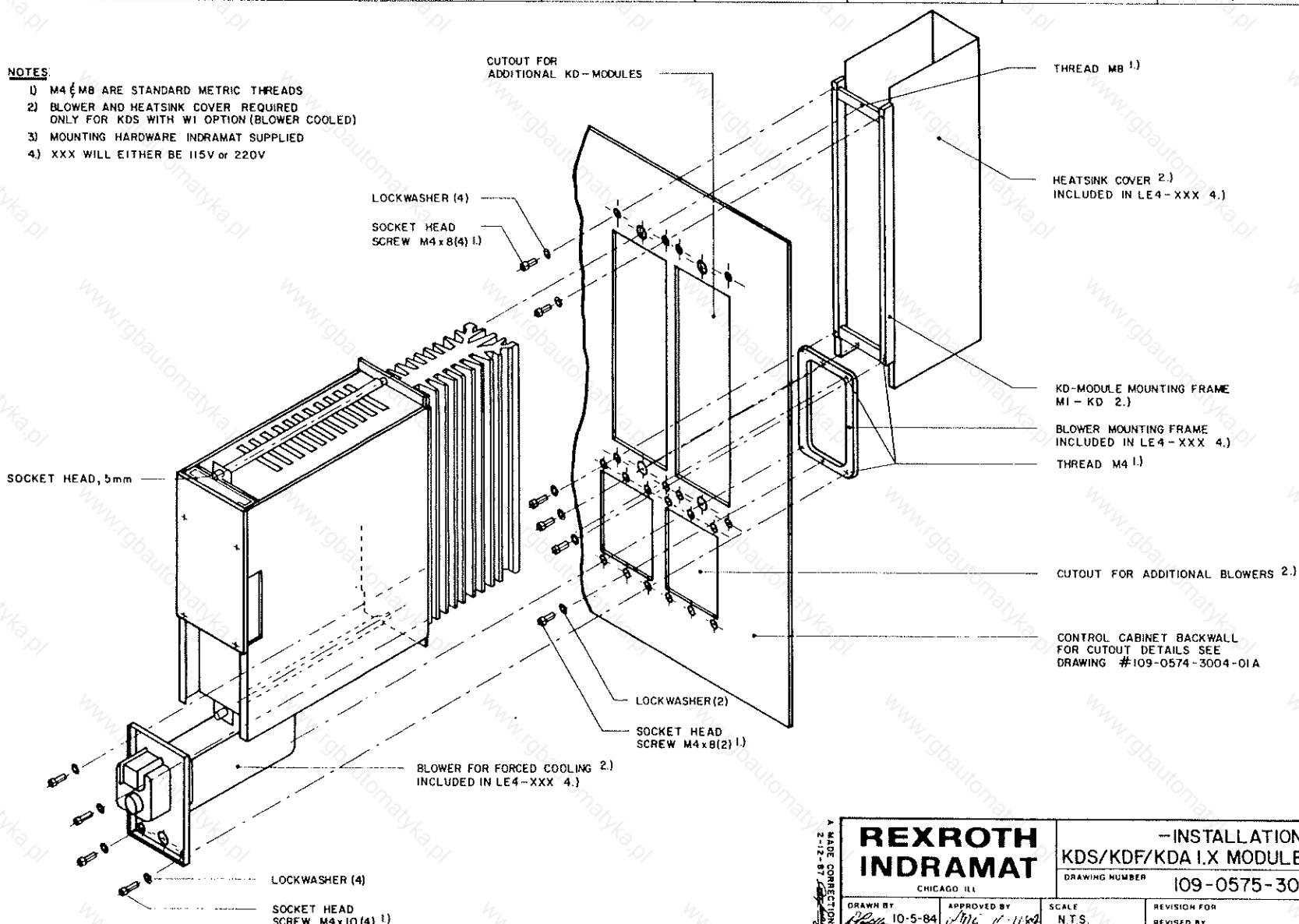

A MADE CORRECTIONS 2-12-87

REXROTH INDRAMAT
CHICAGO ILL

-INSTALLATION-
KDS/KDF/KDA 1.X MODULE AND BLOWER

DRAWING NUMBER 109-0575-3003-01A

DRAWN BY	APPROVED BY	SCALE	REVISION FOR	SHEET
10-5-84	11-11-84	N.T.S.	REVISED BY	1 OF 1

REPRINTS PROHIBITED This document for customer use not to be copied or released Reference copyright law

61336

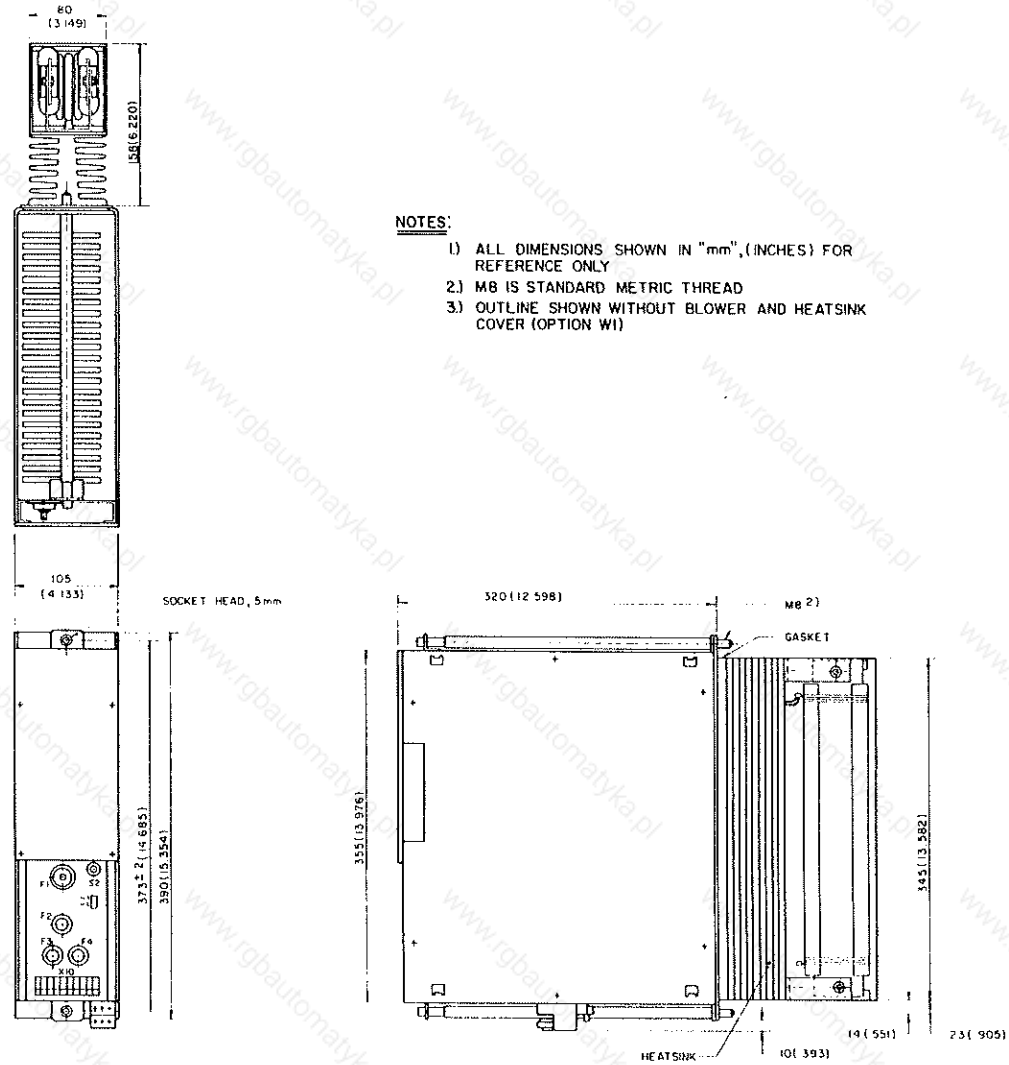

NOTES:

1.) ALL DIMENSIONS SHOWN IN "mm", (INCHES) FOR REFERENCE ONLY
2.) M8 IS STANDARD METRIC THREAD
3.) OUTLINE SHOWN WITHOUT BLOWER AND HEATSINK COVER (OPTION W1)

REXROTH INDRAMAT CHICAGO, ILL.	—OUTLINE— KDV POWER SUPPLY
	DRAWING NUMBER 109-0574-3001-01A
DRAWN BY 10-12-84	APPROVED BY 10-15-84
SCALE	REVISION FOR / REVISED BY
SHEET 1 OF 1	

REPRINTS PROHIBITED. This document for customer use, not to be copied or reproduced. Reference copyright law.

www.rgbautomatyka.pl

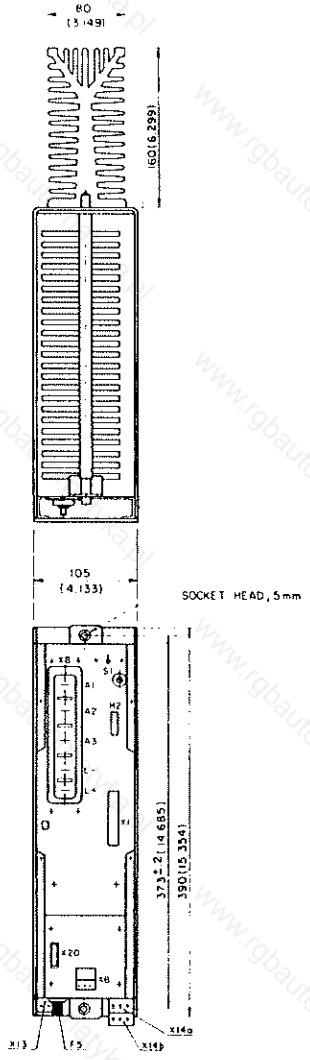

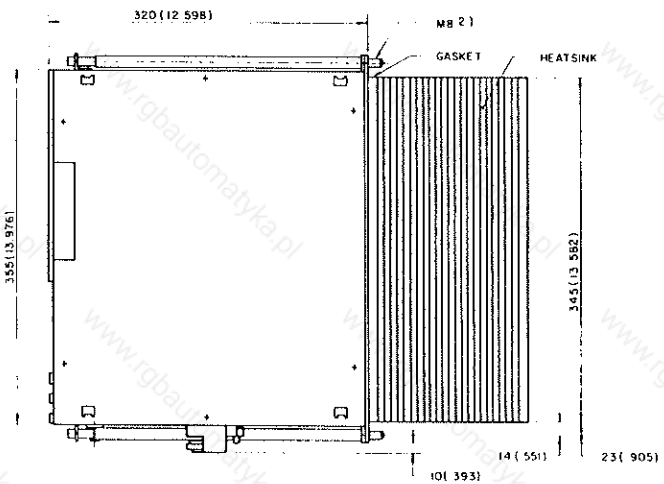

NOTES:

1.) ALL DIMENSIONS SHOWN IN "mm",(INCHES) FOR REFERENCE ONLY
2.) M8 IS STANDARD METRIC THREAD
3.) OUTLINE SHOWN WITHOUT BLOWER AND HEATSINK COVER (OPTIONAL)

REXROTH INDRAMAT

CHICAGO

-- OUTLINE --
KDA SPINDLE MODULE

DRAWING NUMBER 109-0576-3001-01A

DRAWN BY	APPROVED BY	SCALE	REVISION FOR	SHEET
5-8-85		NTS	REVISED BY	1 OF 1

REPRINTS PROHIBITED This document for customer use, not to be copied or released. Reference copyright law.

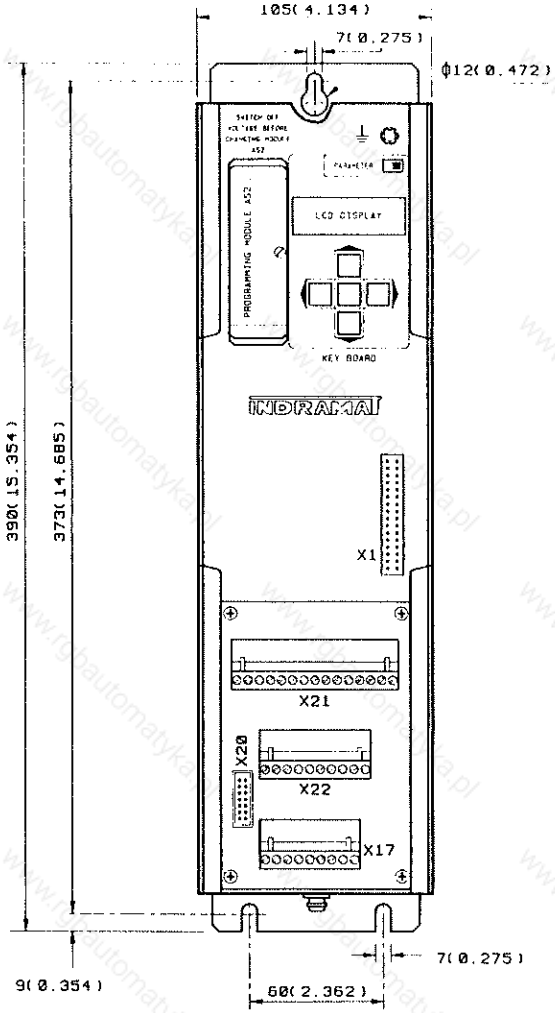

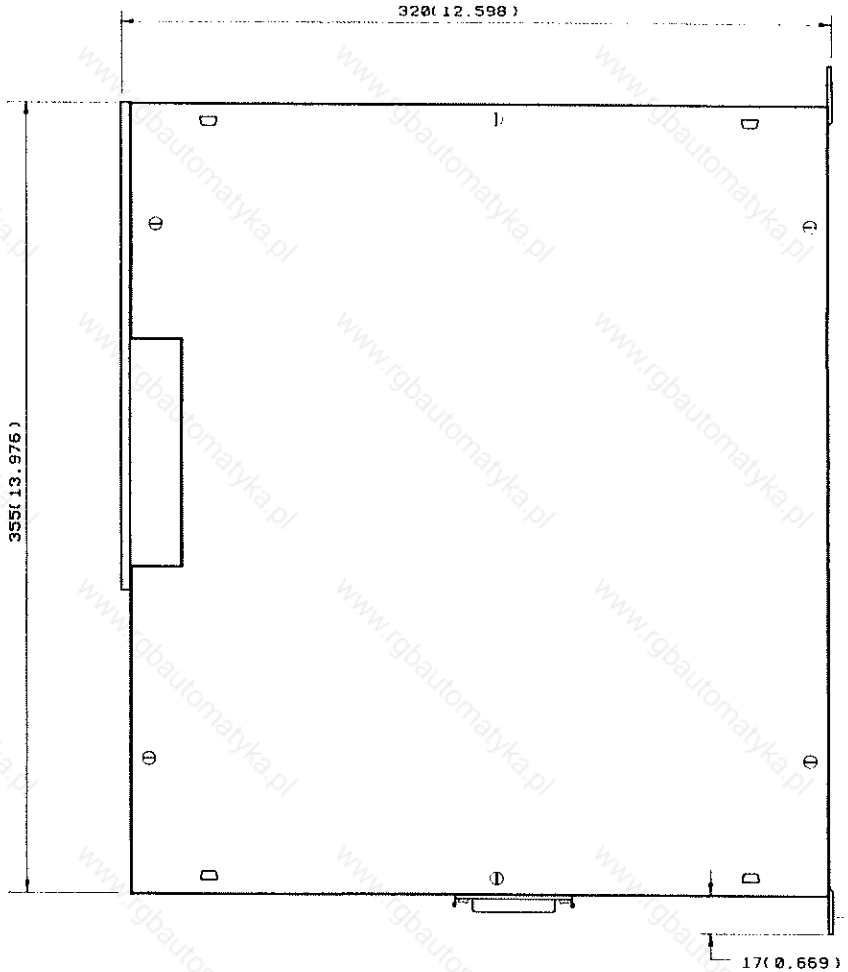

NOTES :

1) ALL DIMENSIONS SHOWN IN "mm", (inch) FOR REFERENCE ONLY.
2) TIGHTENING TORQUE FOR GROUND BOLT: M5=2.5Nm (22 in-lbs)
3) WEIGHT = 7 Kg (15.4 Lbs)

REXROTH INDRAMAT
CHICAGO ILL

CDM 1.4 OUTLINE

DRAWING NUMBER 109-0547-3002-02A

DRAWN BY	APPROVED BY	SCALE	REVISION FOR / REVISED BY	SHEET
1-30-97		NTS		1 OF 1

REPRINTS PROHIBITED This document for customer use, not to be copied or released. Reference copyright law

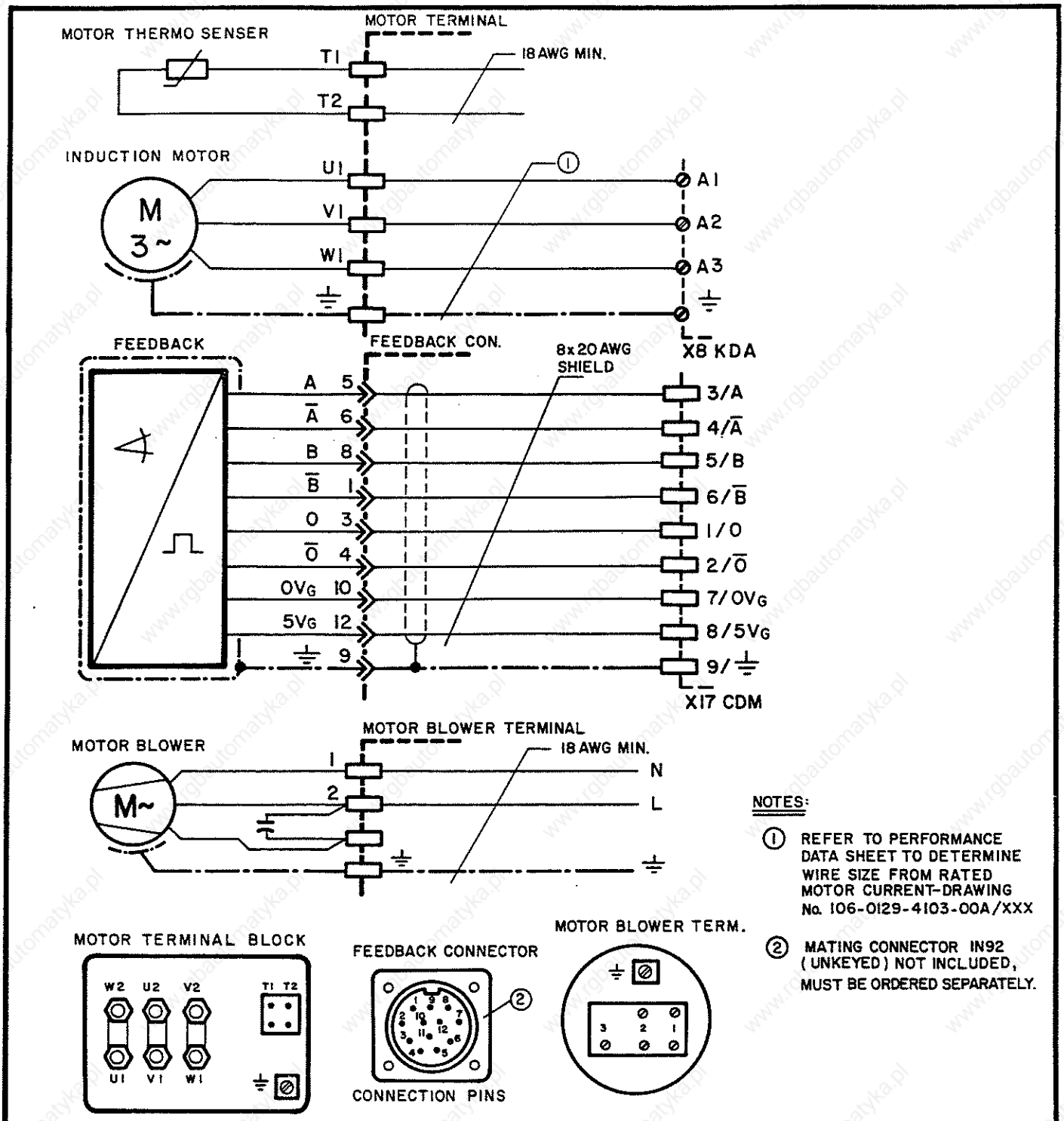

NOTES:

① REFER TO PERFORMANCE DATA SHEET TO DETERMINE WIRE SIZE FROM RATED MOTOR CURRENT-DRAWING No. 106-0129-4103-00A/XXX

② MATING CONNECTOR IN92 (UNKEYED) NOT INCLUDED, MUST BE ORDERED SEPARATELY.

REXROTH INDRAMAT CHICAGO ILL.	IAD CONNECTION DIAGRAM	Rev.	Description	Date	Init.
	DRAWING NUMBER 106-0129-3140-02A	A	NOTE 1 CHANGED	1-28-87	DA

DRAWN BY	APPROVED BY	SCALE	REVISION FOR / REVISED BY	SHEET
12-21-84	WME 1-18-85	N.T.S.		1 OF 1

REPRINTS PROHIBITED. This document for customer use, not to be copied or released. Reference copyright law.

64105

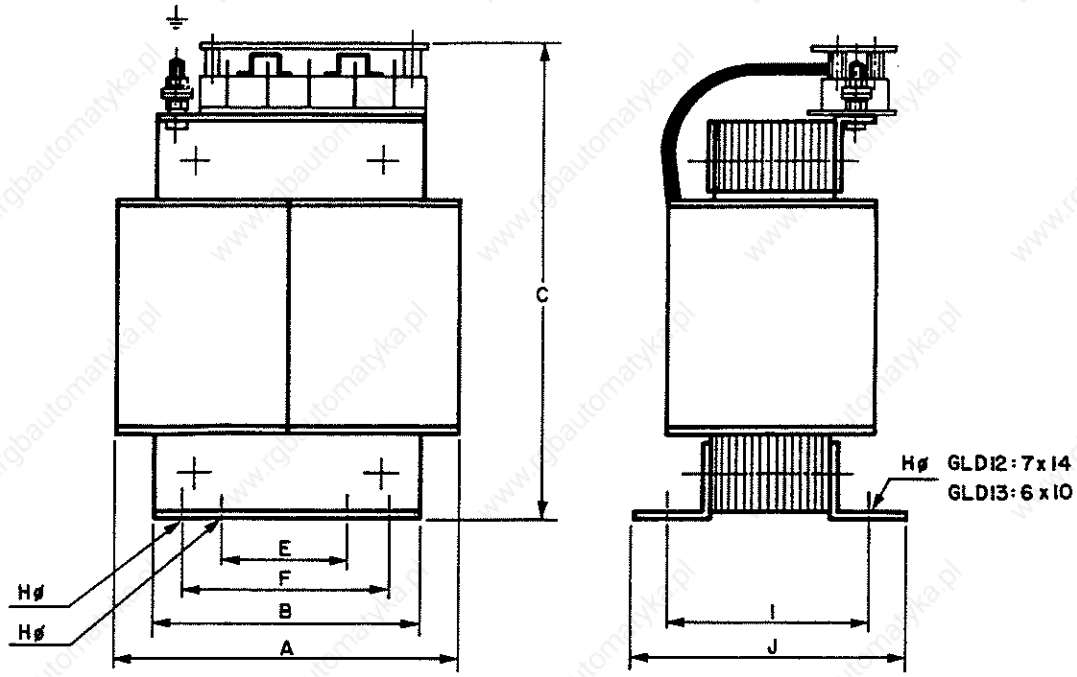

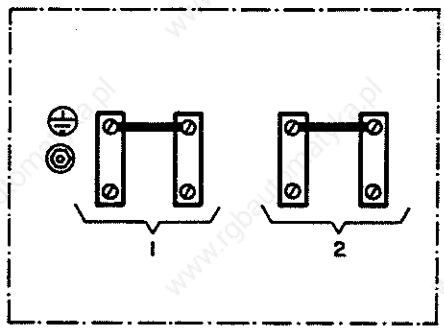

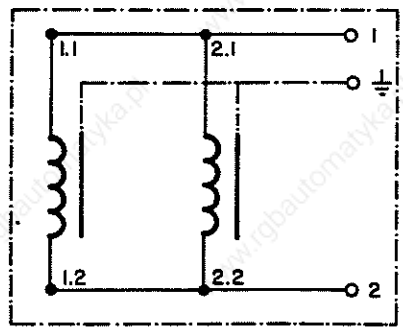

TYPE	mH/A	DIMENSIONS IN "mm", (inches) FOR REFERENCE ONLY										WEIGHT	
		A	B	C	D	E	F	L	Hø	I	J	Kg	LBS
GLD12	1.0/100	160 (6.230)	121 (4.764)	243 (9.567)		60 (2.362)	100 (3.937)		14 (0.551)	85 (3.346)	111 (4.370)	12	26.5
GLD13	1.0/50	120 (4.724)	90 (3.543)	183 (7.205)			60 (2.362)		10 (0.394)	66 (2.598)	82 (3.228)	4.6	10.1

REXROTH INDRAMAT
CHICAGO ILL.

INDUCTOR GLD12/GLD13

DRAWING NUMBER 109-0252-4012-00A

Rev.	Description	Date	Init.

DRAWN BY	APPROVED BY	SCALE	REVISION FOR	SHEET
5-29-85	5-30-85	N.T.S.	REVISED BY	1 OF 1

REPRINTS PROHIBITED. This document for customer use, not to be copied or released. Reference copyright law.

64105

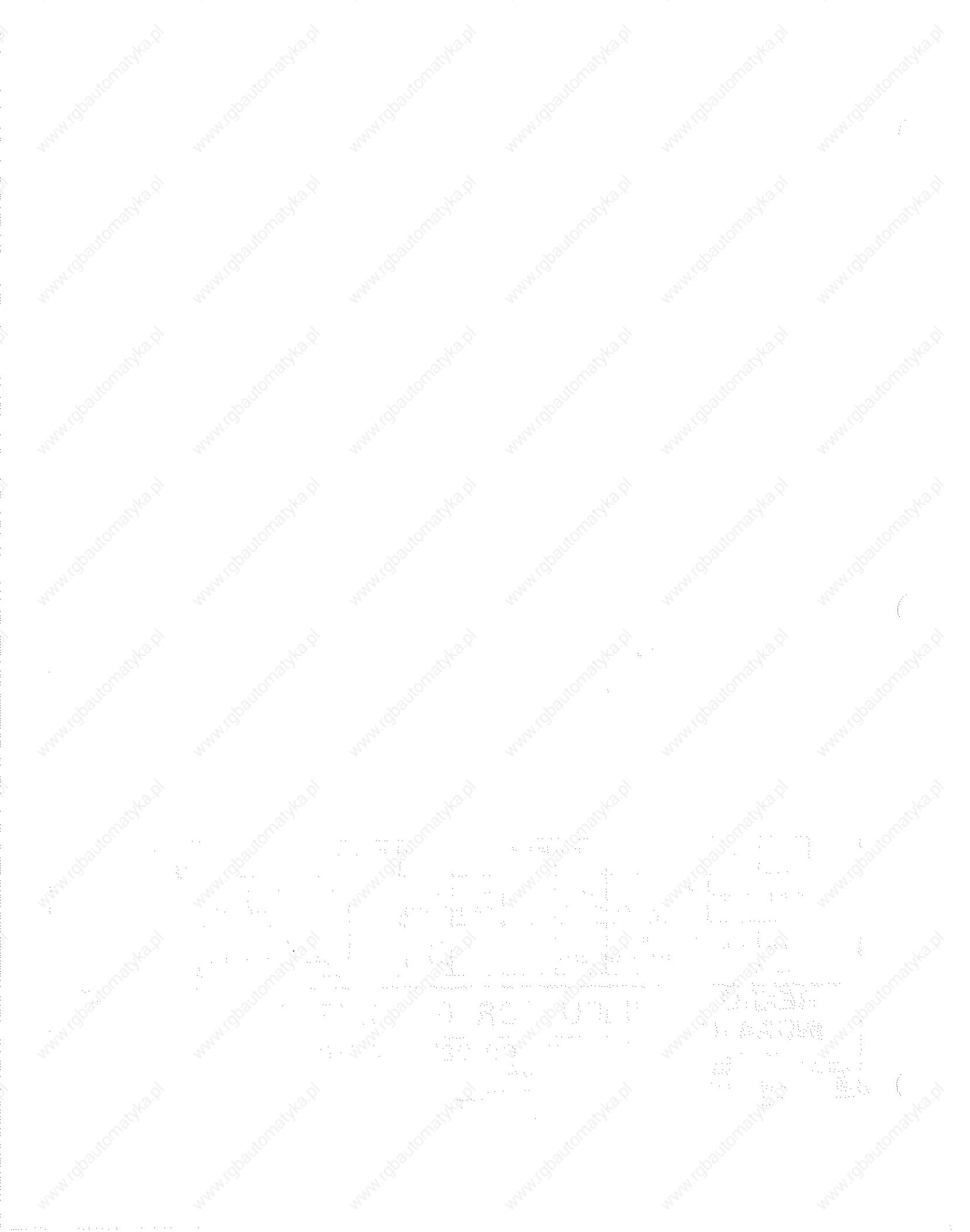

INDUCTION MOTOR OVERLOAD DETECTOR

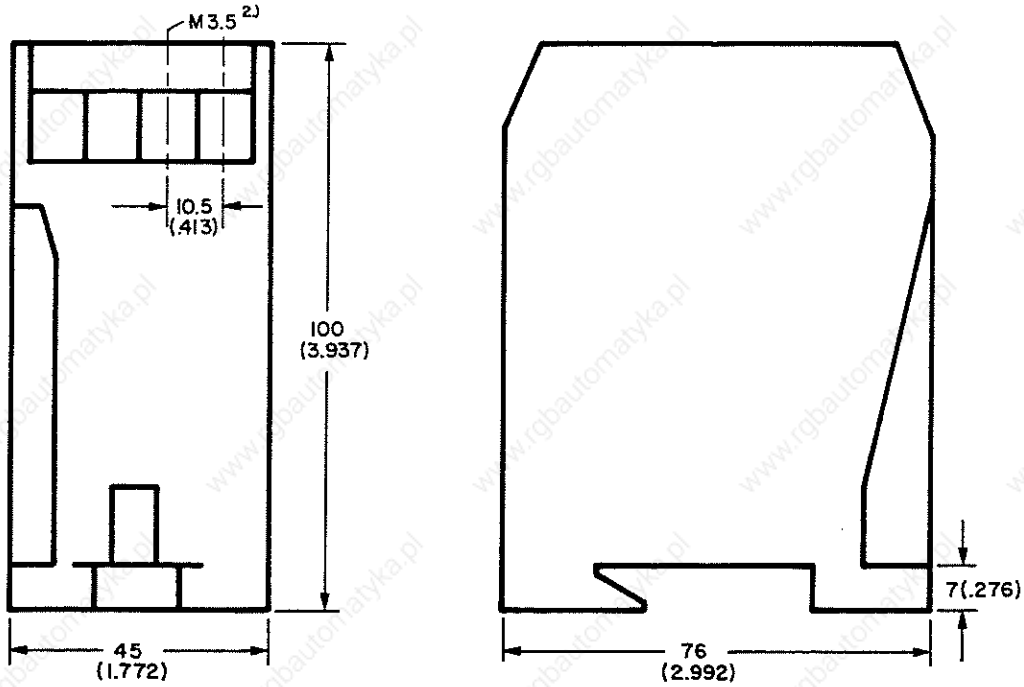

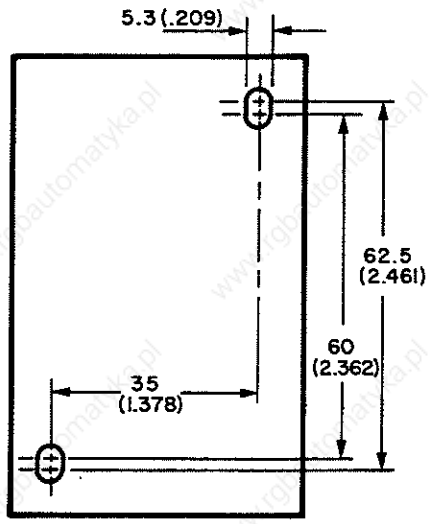

MOUNTING DIMENSIONS

NOTES:

1.) ALL DIMENSIONS SHOWN IN "mm", (inches) FOR REFERENCE ONLY.

2.) M3.5 IS STANDARD METRIC THREAD.

REXROTH INDRAMAT CHICAGO ILL.	**INDUCTION MOTOR OVERLOAD DETECTOR 3UN600**				
	DRAWING NUMBER 209-0042-4001-00A				
DRAWN BY 5-29-85	APPROVED BY	SCALE NTS	REVISION FOR / REVISED BY	SHEET 1 OF 1	

Rev.	Description	Date	Init.

REPRINTS PROHIBITED. This document for customer use, not to be copied or released. Reference copyright law.

84105

READER COMMENT CARD AND REGISTRATION FORM

We welcome your evaluation of this manual. Please complete this form to help us to improve our publications and also to receive notification of revisions to this manual.

Publication: KDA/CDM 1.4
Type of Manual: **User**
Publication No. 74709
Part No. 601145
Revision: C, 2/87

Please indicate the degree to which each statement applies to you by circling whether you ① strongly agree, ② agree, ③ are uncertain, ④ disagree, or ⑤ strongly disagree with the statement.

1.	The manual is well organized.	① ② ③ ④ ⑤
2.	I can find the information I want.	① ② ③ ④ ⑤
3.	The index is thorough.	① ② ③ ④ ⑤
4.	The information is easy to understand.	① ② ③ ④ ⑤
5.	The manual is clearly written.	① ② ③ ④ ⑤
6.	Concepts and vocabulary are easy to understand.	① ② ③ ④ ⑤
7.	Examples are clear and helpful.	① ② ③ ④ ⑤
8.	The manual contains enough illustrations.	① ② ③ ④ ⑤
9.	Layout and format enhance the manual's usefulness.	① ② ③ ④ ⑤
10.	The quality of this manual would influence any repeat purchase decision.	① ② ③ ④ ⑤
11.	The scope of the information in the manual meets my needs.	① ② ③ ④ ⑤

Name_____

Company _____

Address _____ **Dept**_____

City_____ **State** _____ **Zip** _____

Telephone (____) _____

Comments: _____

_____

_____

Tape ✉ Closed

From: _____

_____

_____

_____

Technical Documentation Department
Rexroth Corporation/Indramat Division
5150 Prairie Stone Parkway
Hoffman Estates, Illinois 60192
U.S.A.

Tape ✉ Closed

The Rexroth Corporation, Indramat Division

Main Office
5150 Prairie Stone Parkway
Hoffman Estates, IL 60192
Tel: (847) 645-3600
FAX: (847) 645-3692

Rexroth/Indramat Technical Center
2110 Austin Avenue
Rochester Hills, MI 48309
Tel: (248) 853-8290
FAX: (248) 853-8298

PART NO. 601145

mannesmann technology