BNP-A2938B-E

# MITSUBISHI CNC

## MELDAS AC SERVO MR-S10 SERIES

## MAINTENANCE MANUAL (MR-S11 MR-S12)

www.rgbautomatyka.pl

ADVANCED AND EVER ADVANCING
MITSUBISHI ELECTRIC

# CONTENTS


## I AC SERVO MR-S11 SERIES MAINTENANCE MANUAL (SERVO AMPLIFIER FOR 1-AXIS)

### 1. OUTLINE OF S10 SERIES AC SERVO SYSTEM

1.1 FEATURES OF S10 SERIES SERVO SYSTEM ..... I-1
1.2 S10 SERIES SERVO SYSTEM TABLE ..... I-2
1.3 MR-S11 SERVO SYSTEM FUNCTIONAL BLOCK DIAGRAM ..... I-3

### 2. DAILY MAINTENANCE

2.1 MAINTENANCE TOOLS ..... I-4
2.2 REPLACING BATTERY ..... I-4

### 3. INSTALLATION AND ADJUSTMENT PROCEDURE

3.1 ENVIRONMENTAL CONDITIONS ..... I-6
3.2 INPUT POWER ..... I-6
3.3 MAIN CIRCUIT CONNECTION ..... I-7
3.4 UTILIZATION OF CONTACTOR FOR BRAKE ..... I-13
3.5 SEPARATE TYPE REGENERATION RESISTOR ..... I-14
3.6 PRECAUTIONS ON INSTALLING SERVO AMPLIFIER ..... I-20
3.7 PRECAUTIONS ON INSTALLATION OF SERVO MOTOR AND DETECTOR ..... I-22
3.8 PRECAUTIONS FOR POWER ON AFTER INSTALLATION ..... I-26

### 4. TROUBLESHOOTING

4.1 7-SEGMENT DISPLAY ..... I-28
4.2 TROUBLESHOOTING ..... I-30

### 5. UNIT REPLACEMENT METHODS

5.1 MOUNTING/DISMOUNTING CONTROL PRINTED CIRCUIT BOARD ..... I-63
5.2 DETECTOR MOUNTING METHOD ..... I-65

### 6. HARDWARE CHECK METHODS

6.1 FUNCTIONS OF CARDS ..... I-66
6.2 HARDWARE SETTING AND CHECK PINS ..... I-67

### 7. DETAILS OF SERVO PARAMETERS

### 8. ABSOLUTE POSITION SYSTEM (T20/T30 SYSTEM AND M300 SERIES)

8.1 ABSOLUTE POSITION SYSTEM STRUCTURING PARAMETERS ..... I-94
8.2 DOG TYPE ZERO POINT RETURN PARAMETERS ..... I-95
8.3 VERIFICATION PROCEDURE FOR ABSOLUTE POSITION DATA ..... I-95

8.4 WHEN AN ABNORMALITY OCCURS IN THE ABSOLUTE POSITION COORDINATE SYSTEM ..... I-96
8.5 CHECKING ABSOLUTE POSITION DATA ..... I-96
8.6 ABSOLUTE POSITION DETECTION ALARMS ..... I-99

# II AC SERVO MR-S12 SERIES MAINTENANCE MANUAL (2-AXIS INTEGRATED SERVO AMPLIFIER)

## 1. OUTLINE OF S10 SERIES AC SERVO SYSTEM

1.1 FEATURES OF S10 SERIES SERVO SYSTEM ..... II-1
1.2 S10 SEREIES SERVO SYSTEM TABLE ..... II-2
1.3 MR-S12 SERVO SYSTEM FUNCTIONAL BLOCK DIAGRAM ..... II-3

## 2. DAILY MAINTENANCE

2.1 MAINTENANCE TOOLS ..... II-4
2.2 REPLACING BATTERY ..... II-4

## 3. INSTALLATION AND ADJUSTMENT PROCEDURE

3.1 ENVIRONMENTAL CONDITIONS ..... II-4
3.2 INPUT POWER ..... II-4
3.3 MAIN CIRCUIT DIAGRAM ..... II-5
3.4 UTILIZATION OF BRAKE CONTACTOR ..... II-10
3.5 REGENERATIVE RESISTOR OF SEPARATE INSTALLATION TYPE (REGENERATIVE OPTION RESISTOR) ..... II-10
3.6 CAUTION FOR INSTALLATION OF SERVO AMPLIFIER ..... II-10
3.7 INSTALLATION OF SERVO MOTOR AND DETECTOR ..... II-10
3.8 PRECAUTIONS FOR POWER ON AFTER INSTALLATION ..... II-11

## 4. TROUBLESHOOTING

4.1 7-SEGMENT DISPLAY ..... II-13
4.2 TROUBLESHOOTING ..... II-14

## 5. UNIT REPLACEMENT METHODS

5.1 MOUNTING/DISMOUNTING CONTROL PRINTED CIRCUIT BOARD ..... II-15
5.2 DETECTOR MOUNTING METHOD ..... II-16

## 6. HARDWARE CHECK METHODS

6.1 FUNCTIONS OF CARDS ..... II-17
6.2 SETTING AND CHECK PIN ..... II-19

## 7. DETAILS OF SERVO PARAMETER

## 8. ABSOLUTE POSITION SYSTEM

# APPENDIX


1. CABLE CONNECTION ..... A-1
2. CABLE SPECIFICATION ..... A-17
3. MAIN CIRCUIT STRUCTURE ..... A-33
4. CHECKING MINIMUM ACCELERATION/DECELERATION TIME CONSTANT ..... A-35
5. CHECKING POSITIONING REPEATABILITY ..... A-37
6. CALCULATING COASTING AMOUNT IN EMERGENCY STOP ..... A-41
7. SERVO MOTOR SPECIFICATIONS ..... A-42
8. DETECTOR SPECIFICATIONS ..... A-43
9. SERVO AMPLIFIER SPECIFICATIONS (MR-S11) ..... A-44

# I AC SERVO MR-S11 SERIES
# MAINTENANCE MANUAL
# (SERVO AMPLIFIER FOR 1-AXIS)

www.rgbautomatyka.pl

# 1. OUTLINE OF S10 SERIES AC SERVO SYSTEM

## 1.1 FEATURES OF S10 SERIES SERVO SYSTEM

(1) Connection to MELDAS M300 series NC
The S10 series AC servo system can be connected to a MELDAS M300 V series NC to provide high speed computation and high speed communication functions.
Thus, a servo system enriched with high accuracy control functions and a robust property can be set up. In addition, error due to tick motion which may occur in high response machinery can be compensated for.

(2) Series of AC servo systems
The HA series servo motor which provides high response and easy maintenance is used. A wide range of servo motors and servo amplifiers is lined up, thereby covering a wider power range than a conventional series. In addition, a wide range of multiple axis-type amplifiers are also provided.

(3) Performance enhancement by all-digital servo
All-digital control system used in the conventional model S series system is enhanced. Using a high speed CPU, the system provides high response, repeatability, and reliability for high speed as well as accuracy control operations.

(4) Intelligence
Individual CPUs control individual axes to enhance machining accuracy. Increasing the number of tuning parameters allows the system to be adjusted securely. In addition, the AI diagnosis function is also improved.

(5) Improvement of reliability by utilizing less parts and cables.
Using gate arrays for control card components allows the number of parts to be significantly reduced. In addition, the main circuit components mounted on the power card contribute to reducing the number of cables.

(6) High speed, highly accurate machining (0.1 μm/pulse command)
The maximum speed in submicron (0.1 μm/pulse command) selection specification is increased up to 2400 rpm.

(7) Absolute position detection system
An absolute position detection system free from the zero point return operations is provided.

# 2. DAILY MAINTENANCE

## 2.1 MAINTENANCE TOOLS

(1) Measuring instruments

The following instruments are used for checking that the power is correctly supplied to the servo amplifier and that the servo amplifier cables are correctly connected.

Table 2.1 Maintenance tools

| Instrument | Condition | Application |
|---|---|---|
| Tester | | Before turning on the power, check that the servo amplifier cables are correctly connected. |
| Oscilloscope | | Used for general measurement and troubleshooting. |
| AC voltmeter | Measure the AC power voltage. The tolerance should be be ± 2 % or less. | Measure the AC power voltage supplied to the servo amplifier. |
| DC voltmeter | Maximum scale: 10 V, 30 V. The tolerance should be ± 2 % or less. | Measure the DC power voltage. |
| AC ammeter | | Measure the AC power supplied to the motor. |

(2) Tools

Screwdriver (Phillips: large, midium Flat head: small)

## 2.2 REPLACING BATTERY

The battery-operated absolute position detection system stores data. The battery is mounted on the RF33 card.
For the battery, use a high reliability button. Since the battery is screwed to the P.C. board, an imperfect contact will not occur.

Battery backup time ..... 1 month
Battery life ..... 3 years (depending on the operation temperature)

Since the life of the battery is approx. 3 years, replace it before it expires. (When the battery alarm occurs, the content of the absolute position may be destroyed.)

Storage battery to be used: GB250-3FB2

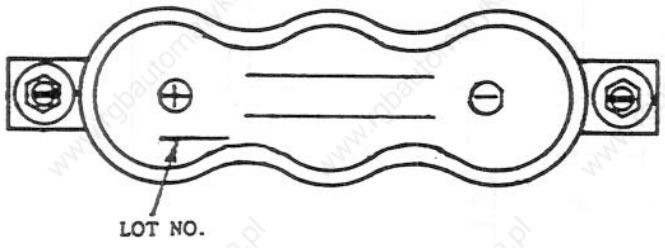


LOT NO.
02 7 C17
Indicates 1987.
Indicates February.

Since this battery is made to special specification in order to ensure a higher reliability, it should be purchased from Mitsubishi Electric, it has been charged.

# CONTENTS


## I AC SERVO MR-S11 SERIES MAINTENANCE MANUAL (SERVO AMPLIFIER FOR 1-AXIS)

### 1. OUTLINE OF S10 SERIES AC SERVO SYSTEM

1.1 FEATURES OF S10 SERIES SERVO SYSTEM ..... I-1
1.2 S10 SERIES SERVO SYSTEM TABLE ..... I-2
1.3 MR-S11 SERVO SYSTEM FUNCTIONAL BLOCK DIAGRAM ..... I-3

### 2. DAILY MAINTENANCE

2.1 MAINTENANCE TOOLS ..... I-4
2.2 REPLACING BATTERY ..... I-4

### 3. INSTALLATION AND ADJUSTMENT PROCEDURE

3.1 ENVIRONMENTAL CONDITIONS ..... I-6
3.2 INPUT POWER ..... I-6
3.3 MAIN CIRCUIT CONNECTION ..... I-7
3.4 UTILIZATION OF CONTACTOR FOR BRAKE ..... I-13
3.5 SEPARATE TYPE REGENERATION RESISTOR ..... I-14
3.6 PRECAUTIONS ON INSTALLING SERVO AMPLIFIER ..... I-20
3.7 PRECAUTIONS ON INSTALLATION OF SERVO MOTOR AND DETECTOR ..... I-22
3.8 PRECAUTIONS FOR POWER ON AFTER INSTALLATION ..... I-26

### 4. TROUBLESHOOTING

4.1 7-SEGMENT DISPLAY ..... I-28
4.2 TROUBLESHOOTING ..... I-30

### 5. UNIT REPLACEMENT METHODS

5.1 MOUNTING/DISMOUNTING CONTROL PRINTED CIRCUIT BOARD ..... I-63
5.2 DETECTOR MOUNTING METHOD ..... I-65

### 6. HARDWARE CHECK METHODS

6.1 FUNCTIONS OF CARDS ..... I-66
6.2 HARDWARE SETTING AND CHECK PINS ..... I-67

### 7. DETAILS OF SERVO PARAMETERS

### 8. ABSOLUTE POSITION SYSTEM (T20/T30 SYSTEM AND M300 SERIES)

8.1 ABSOLUTE POSITION SYSTEM STRUCTURING PARAMETERS ..... I-94
8.2 DOG TYPE ZERO POINT RETURN PARAMETERS ..... I-95
8.3 VERIFICATION PROCEDURE FOR ABSOLUTE POSITION DATA ..... I-95

8.4 WHEN AN ABNORMALITY OCCURS IN THE ABSOLUTE POSITION COORDINATE SYSTEM ..... I-96
8.5 CHECKING ABSOLUTE POSITION DATA ..... I-96
8.6 ABSOLUTE POSITION DETECTION ALARMS ..... I-99

# II AC SERVO MR-S12 SERIES MAINTENANCE MANUAL (2-AXIS INTEGRATED SERVO AMPLIFIER)

## 1. OUTLINE OF S10 SERIES AC SERVO SYSTEM

1.1 FEATURES OF S10 SERIES SERVO SYSTEM ..... II-1
1.2 S10 SEREIES SERVO SYSTEM TABLE ..... II-2
1.3 MR-S12 SERVO SYSTEM FUNCTIONAL BLOCK DIAGRAM ..... II-3

## 2. DAILY MAINTENANCE

2.1 MAINTENANCE TOOLS ..... II-4
2.2 REPLACING BATTERY ..... II-4

## 3. INSTALLATION AND ADJUSTMENT PROCEDURE

3.1 ENVIRONMENTAL CONDITIONS ..... II-4
3.2 INPUT POWER ..... II-4
3.3 MAIN CIRCUIT DIAGRAM ..... II-5
3.4 UTILIZATION OF BRAKE CONTACTOR ..... II-10
3.5 REGENERATIVE RESISTOR OF SEPARATE INSTALLATION TYPE (REGENERATIVE OPTION RESISTOR) ..... II-10
3.6 CAUTION FOR INSTALLATION OF SERVO AMPLIFIER ..... II-10
3.7 INSTALLATION OF SERVO MOTOR AND DETECTOR ..... II-10
3.8 PRECAUTIONS FOR POWER ON AFTER INSTALLATION ..... II-11

## 4. TROUBLESHOOTING

4.1 7-SEGMENT DISPLAY ..... II-13
4.2 TROUBLESHOOTING ..... II-14

## 5. UNIT REPLACEMENT METHODS

5.1 MOUNTING/DISMOUNTING CONTROL PRINTED CIRCUIT BOARD ..... II-15
5.2 DETECTOR MOUNTING METHOD ..... II-16

## 6. HARDWARE CHECK METHODS

6.1 FUNCTIONS OF CARDS ..... II-17
6.2 SETTING AND CHECK PIN ..... II-19

## 7. DETAILS OF SERVO PARAMETER

## 8. ABSOLUTE POSITION SYSTEM

# APPENDIX


1. CABLE CONNECTION ..... A-1
2. CABLE SPECIFICATION ..... A-17
3. MAIN CIRCUIT STRUCTURE ..... A-33
4. CHECKING MINIMUM ACCELERATION/DECELERATION TIME CONSTANT ..... A-35
5. CHECKING POSITIONING REPEATABILITY ..... A-37
6. CALCULATING COASTING AMOUNT IN EMERGENCY STOP ..... A-41
7. SERVO MOTOR SPECIFICATIONS ..... A-42
8. DETECTOR SPECIFICATIONS ..... A-43
9. SERVO AMPLIFIER SPECIFICATIONS (MR-S11) ..... A-44

# I AC SERVO MR-S11 SERIES
# MAINTENANCE MANUAL
# (SERVO AMPLIFIER FOR 1-AXIS)

www.rgbautomatyka.pl

# 1. OUTLINE OF S10 SERIES AC SERVO SYSTEM

## 1.1 FEATURES OF S10 SERIES SERVO SYSTEM

(1) Connection to MELDAS M300 series NC
The S10 series AC servo system can be connected to a MELDAS M300 V series NC to provide high speed computation and high speed communication functions.
Thus, a servo system enriched with high accuracy control functions and a robust property can be set up. In addition, error due to tick motion which may occur in high response machinery can be compensated for.

(2) Series of AC servo systems
The HA series servo motor which provides high response and easy maintenance is used. A wide range of servo motors and servo amplifiers is lined up, thereby covering a wider power range than a conventional series. In addition, a wide range of multiple axis-type amplifiers are also provided.

(3) Performance enhancement by all-digital servo
All-digital control system used in the conventional model S series system is enhanced. Using a high speed CPU, the system provides high response, repeatability, and reliability for high speed as well as accuracy control operations.

(4) Intelligence
Individual CPUs control individual axes to enhance machining accuracy. Increasing the number of tuning parameters allows the system to be adjusted securely. In addition, the AI diagnosis function is also improved.

(5) Improvement of reliability by utilizing less parts and cables.
Using gate arrays for control card components allows the number of parts to be significantly reduced. In addition, the main circuit components mounted on the power card contribute to reducing the number of cables.

(6) High speed, highly accurate machining (0.1 $\mu$m/pulse command)
The maximum speed in submicron (0.1 $\mu$m/pulse command) selection specification is increased up to 2400 rpm.

(7) Absolute position detection system
An absolute position detection system free from the zero point return operations is provided.

# 1.2 S10 SERIES SERVO SYSTEM TABLE

## System structure

| System | | | Command | System structural drawing | System type/System performance | Unit format: Axis specification | Unit format: Servo amplifier | Unit format: Option card | Unit format: Motor shaft end detector | Unit format: Machine end /ball screw end detector | Cable name: Amplifier-motor shaft end detector cable | Cable name: Amplifier - motor shaft end detector - machine end detector cable |
|---|---|---|---|---|---|---|---|---|---|---|---|---|
| Incremental detection | Semi-closed loop | | 1 micron | 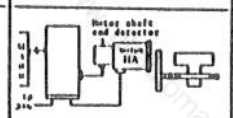 | **Standard type**<br>• Maximum follow-up performance: 1 Mpps<br>• Minimum resolution : 0.018°/p (Motor shaft end)<br>• Maximum speed : 3000 rpms<br>The maximum speed depends on the motor being used. | 1-axis | MR-S11-□-E01 | - | OSE5K-6-12-108 (OSE5K) | - | CN2K○<br>↑<br>Axis number<br>L ≤ 7.5m-N541C583<br>L > 7.5m-N541C582 | - |
| | | | | | | 2-axis | MR-S12-□-E01 | - | | | | |
| | | | Submicron | 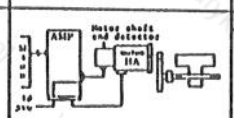 | **High accuracy type**<br>• Maximum follow-up performance: 2 Mpps<br>• Minimum resolution : 0.0036°/p (Motor shaft end)<br>• Maximum speed : 2400 rpm | 1-axis | MR-S11-□-E33 | RF-33 | OAER25K-1X-3-8-108 (OAER25K-1X) | - | CN33K○<br>L ≤ 20m-N541C616 | - |
| | | | | | | 2-axis | MR-S12-□-E33 | RF-332 | | | | |
| | Closed loop | Ball screw end detection | 1 micron | 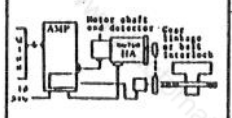 | **Ball screw end detection type**<br>• Maximum follow-up performance: 1 Mpps (Ball screw end)<br>• Minimum resolution : 0.018°/p (Ball screw end)<br>• Maximum speed : 3000 rpm (Ball screw end)<br>The maximum speed depends on the motor being used. | 1-axis | MR-S11-□-E31 | RF-31 | OSE5K-6-12-108 (OSE5K) | OSE5KN-KT□-3-9.52-0<br>↑<br>Connector direction | CN2K○ | CN31RN ○ |
| | | | | | | 2-axis | MR-S12-□-E31 | RF-312 | | | | |
| | | Scale F/B | 1 micron | 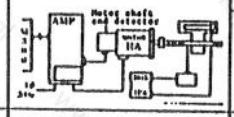 | **Scale F/B type**<br>• Maximum follow-up performance: 1 Mpps<br>• Minimum resolution : 1μm or 0.5μm<br>• Maximum speed : 3000 rpm<br>System performance depends on the motor and scale being used. | 1-axis | MR-S11-□-E31 | RF-31 | OSE5K-6-12-108 (OSE5K) | Various scales of pulse F/B outputs of 1μ and 0.5μ specification can be connected. | CN2K○ | CN31H○/H○ |
| | | | | | | 2-axis | MR-S12-□-E31 | RF-312 | | | | |
| | | | Submicron | 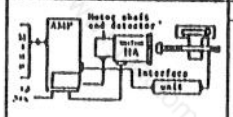 | **High accuracy scale F/B type**<br>• Maximum follow-up performance: 2 Mpps<br>• Minimum resolution : 0.1μm<br>• Maximum speed : 2400 rpm<br>System performance depends on the scale being used. | 1-axis | MR-S11-□-E33 | RF-33 | OAER25K-1X-3-8-108 (OAER25K-1X) | Various scales of pulse F/B outputs in 0.1μ specification can be connected. | CN33N○ | CN31N○ |
| | | | | | | 2-axis | MR-S12-□-E33 | RF-332 | | | | |
| Absolute position detection | Semi-closed loop | | 1 micron | 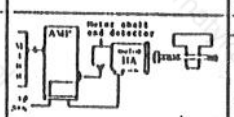 | **Absolute position detection type**<br>• Maximum follow-up performance: 1 Mpps<br>• Minimum resolution : 0.018°/p (Motor shaft end)<br>• Maximum speed : 3000 rpm<br>The maximum speed depends on the motor being used. | 1-axis | MR-S11-□-Z33 | RF-33 | OAER5K-1X-3-8-108 (OAER5K-1X) | - | CN33K○ | - |
| | | | | | | 2-axis | MR-S12-□-Z33 | RF-332 | | | | |
| | Closed loop | Ball end detection | 1 micron | 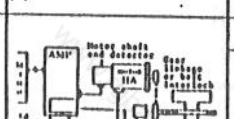 | **Absolute position ball screw end detection type**<br>• Maximum follow-up performance: 1 Mpps (Ball screw end)<br>• Minimum resolution : 0.018°/p (Ball screw end)<br>• Maximum speed : 3000 rpm (Ball screw end)<br>The maximum speed depends on the motor being used. | 1-axis | MR-S11-□-Z33 | RF-33 | OSE5K-6-12-108 (OSE5K) | OAER5K-1X-ET□-3-9.52-0<br>↑<br>Connector direction | CN2K○ | CN33R |
| | | | | | | 2-axis | MR-S12-□-Z33 | RF-332 | | | | |

Note (1) : System structural drawing above represents the one axis type.
(2) : In a two-axis system, when the required option cards are same systems, systems can be combined freely for each axis. In addition, the standard system can be combined with any system.

# 1.3 MR-S11 SERVO SYSTEM FUNCTIONAL BLOCK DIAGRAM

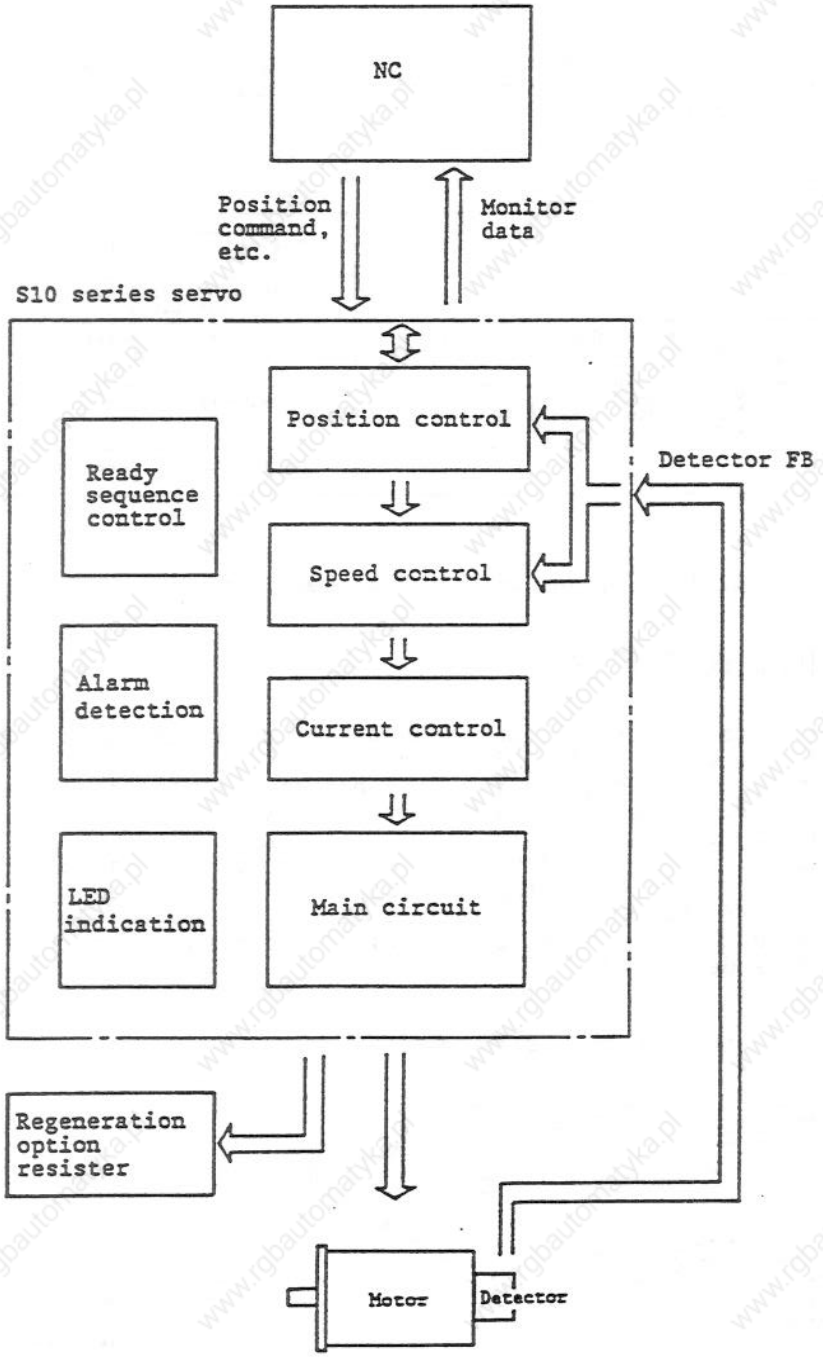

# 2. DAILY MAINTENANCE

## 2.1 MAINTENANCE TOOLS

(1) Measuring instruments

The following instruments are used for checking that the power is correctly supplied to the servo amplifier and that the servo amplifier cables are correctly connected.

Table 2.1 Maintenance tools

| Instrument | Condition | Application |
|---|---|---|
| Tester | | Before turning on the power, check that the servo amplifier cables are correctly connected. |
| Oscilloscope | | Used for general measurement and troubleshooting. |
| AC voltmeter | Measure the AC power voltage. The tolerance should be be ± 2 % or less. | Measure the AC power voltage supplied to the servo amplifier. |
| DC voltmeter | Maximum scale: 10 V, 30 V. The tolerance should be ± 2 % or less. | Measure the DC power voltage. |
| AC ammeter | | Measure the AC power supplied to the motor. |

(2) Tools

Screwdriver (Phillips: large, midium Flat head: small)

## 2.2 REPLACING BATTERY

The battery-operated absolute position detection system stores data.
The battery is mounted on the RF33 card.
For the battery, use a high reliability button. Since the battery is screwed to the P.C. board, an imperfect contact will not occur.
Battery backup time ..... 1 month
Battery life ..... 3 years (depending on the operation temperature)
Since the life of the battery is approx. 3 years, replace it before it expires. (When the battery alarm occurs, the content of the absolute position may be destroyed.)

Storage battery to be used: GB250-3FB2

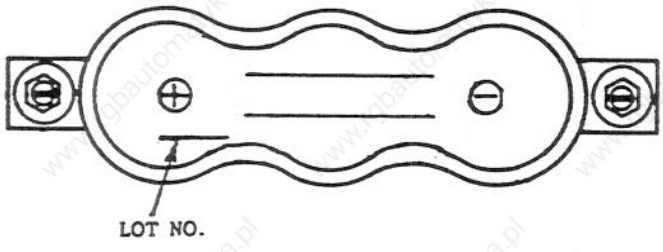


LOT NO.
02 7 C17
Indicates 1987.
Indicates February.

Since this battery is made to special specification in order to ensure a higher reliability, it should be purchased from Mitsubishi Electric, it has been charged.

Replacing battery

1. Turn off the NC power and turn on NF of the input power 200/220 VAC (if the servo amplifier input power is turned on).

   Note: When the battery is replaced while the servo amplifier input power (200/220 VAC) has been turned off, the absolute value data is erased.

2. Remove the two battery mounting screws using the screwdriver.

3. Make sure the position of the polarities of the battery are correct and tighten the mounting screws.

   Note: If the battery is replaced and the polarities are wrong, it will be damaged. Do not touch other parts with the screwdriver because currents flows through it.

4. Turn on the NC power and check for abnormalities.

# 3. INSTALLATION AND ADJUSTMENT PROCEDURE

When installing the servo amplifier, consider the following factors. Otherwise, the maximum performance of the servo amplifier cannot be obtained.

## 3.1 ENVIRONMENTAL CONDITIONS

The following factors refer to the environmental conditions found where a cabinet and pendant are mounted. To satisfy the following conditions, follow 3.5, "Precautions for Installing Servo Amplifier."

(1) Ambient temperature
In operation: 0 to 55°C
In storage : -55 to 70°C

(2) Humidity
In operation: Relative humidity ... 90% or less (no condensation)
In storage : Relative humidity ... 90% or less
High humidity may damage the insulation or reduce the life of the part. Although special dehumidification is not required, do not install the servo amplifier in a moist place.

(3) Vibration
50 to 10 Hz ..... Amplitude: 2.5 mm
10 to 30 Hz ..... 1 G
Shock: 5 G, 10 to 12 ms

(4) Atmosphere
Do not use the servo amplifier in an area exposed to dust, sprayed organic gas, or corrosive gas.

(5) Power phase balance: ± 20 V or less

## 3.2 INPUT POWER

(1) Input voltage
200/220 VAC : +10 %, -15 %

(2) Frequency : 50/60 Hz, ± 1 Hz, 3 phases

(3) Power consumption

| Servo amplifier | Applicable motor | 3-phase power (servo amplifier input) | |
|---|---|---|---|
| | | Input in 100% output (kVA)(1) | Input in 100% output at 170V(2) |
| MR-S11-33 | HA23/33 | 0.6 | 2.1 |
| MR-S11-40 | HA40/43 | 1.0 | 3.4 |
| MR-S11-80 | HA80/83 | 1.6 | 5.4 |
| MR-S11-100 | HA100 | 2.7 | 9.2 |
| MR-S11-103 | HA103 | 4.7 | 16 |
| MR-S11-200 | HA200 | 4.7 | 16 |
| MR-S11-300 | HA203/300 | 5.9 | 20 |
| MR-S11-700 | HA700 | 9.0 | 31 |
| MR-S11-900 | HA900 | 11.5 | 39 |

Note 1) The required thermal kVA capacity of the power supply is shown in (1) of the above table. However, if the motor is accelerated, a peak power 2 or 3 times the value of (1) is required. Therefore, maintain a voltage of 170 V to 242 V at the servo amplifier terminals with small voltage fluctuation.

2) The current capacity of the power supply should conform with the value of (2) in the above table.

3) When many axes are used, the power capacity per axis should be added for all the axes. (Example) For 3 simultaneous axes using HA80 + HA100 + HA300, 10.2 kVA, 34.6 A is required. For selecting a non-fuse breaker, see the Specification Manual.

(4) Input transformer
If the power voltage described above cannot be used, mount a power transformer on the power input.

## 3.3 MAIN CIRCUIT CONNECTION

### 3.3.1 CONNECTION DIAGRAM

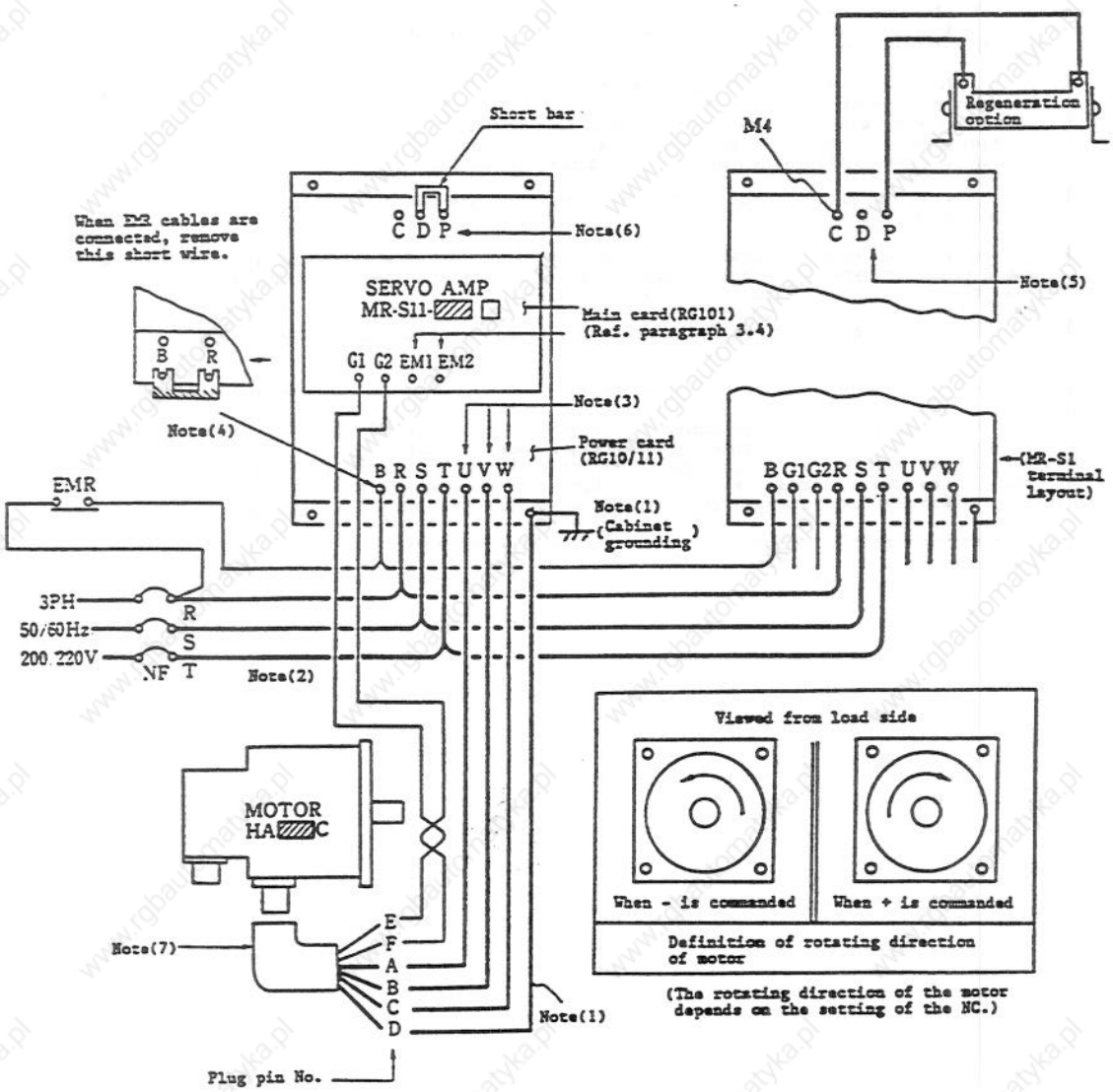

Note (1) The servo amplifier is 200 V. As long as the power supply specification is satisfied, the power transformer is not required. When a 400 V or higher is used, use a voltage drop transformer.
Since the main circuit does not use a transformer, ground it.
The above figure does not show a transformer with an overseas specification.

(2) The phase order of the power terminals R, S, and T of the servo amplifier is freely assigned. However, when many axes are used, different symbol cables should not be connected.

(3) Precautions for connecting servo amplifier terminals U, V, and W.

a. The relationship between the phase order of the servo amplifier terminals U, V, and W and the motor pins A, B, and C should be maintained.
If the phase order is incorrect, the motor may vibrate or rotate abruptly.
The motor cannot be rotated in reverse by changing the phase order.

b. Power should not be applied to the output terminals U, V, and W of the servo amplifier. Avoid connecting the cables in a way that the output terminals U, V, and W of the servo amplifier could be mistakenly grounded. Such a mistake may damage the servo amplifier.

(4) The terminals B and R of the servo amplifier are connected with a short wire. When EMR (emergency stop) cables are connected, remove this short wire. When the EMR contacts are open, the servo is accurately emergency-stopped.

(5) The terminals D and C of the servo amplifier are connected with a short wire. When the regeneration option is used, remove the short bar and connect it as shown in the following figure (see paragraph 3.4).
Since the regeneration option generates heat, avoid causing a fire in the surrounding portion and the connection cables.

(6) MR-S11-700 and MR-S11-900 are not provided with terminal D. The regeneration resistor should be mounted separately.
Connect the regeneration resistor between the terminals C and P. For the specification of the regeneration resistor, see paragraph 3.4. Since the regeneration option generates heat, avoid firing the surrounding portion and the connection cables.

(7) The type of Cannon connector to be used depends on the motor.
For details, see 3.3.2.

(8) The position of each terminal on the servo amplifier depends on the large capacity type and small capacity type. For the terminal positions, see the Specification Manual.
Obey the precautions in paragraphs 3.6 and 3.7.

(9) For the selection of the non-fuse breaker, see the Specification Manual.

When terminal B of the servo amplifier is connected to the EMR contact, the emergency stop is structured in two different systems (alarm codes 55 and E7).
The current which flows during the EMR contact is approx. 30 mA per axis at 200 V, 60 Hz.
Even if the EMR contacts are open again after the emergency stop takes place, unless the reset operation is performed from NC, the emergency stop cannot be reset.

## 3.3.2 MOTOR CONNECTION

1) Cannon plugs to be used

| Motor model | Motor side connector | Cannon plug to be used |
|---|---|---|
| HA053C<br>HA13C<br>HA23C<br>HA33C | 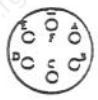 <br>MS3102A18-12P | 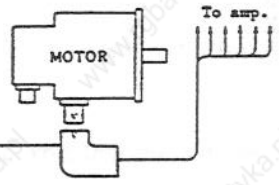 |
| HA40C<br>HA43C<br>HA80C<br>HA83C | <br>MS3102A22-23P | 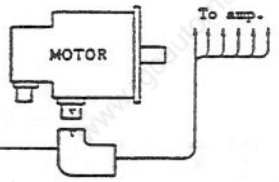 |
| HA100C<br>HA200C<br>HA300C<br>HA103C<br>HA203C | <br>MS3102A24-10P | 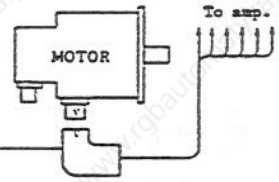 |
| HA053CB<br>HA13CB<br>HA23CB<br>HA33CB | <br>MS3102A18-12P<br> <br>MS3102A10SL-4P | 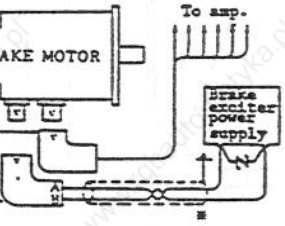 |
| HA40CB<br>HA43CB<br>HA80CB<br>HA83CB | <br>MS3102A22-23P | 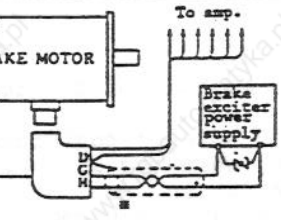 |
| HA100CB<br>HA200CB<br>HA300CB<br>HA103CB<br>HA203CB | <br>MS3102A24-10P<br> <br>MS3102A10SL-4P | 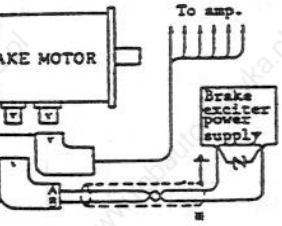 |

| Pin symbol | | Lead side | |
|---|---|---|---|
| A, B, C | | U, V, W | Motor winding |
| D | | E | Earth |
| E, F | | $G_1$, $G_2$ | Thermal |
| G, H | | | Brake |

Note 1) The angle plug (MS3108), straight plug (MS3106), cable clamps (MS3057), and wiring connector should be properly selected.
2) The key position of the Cannon connector is directed at the motor flanges.

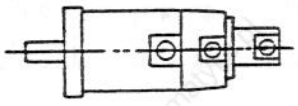

(2) Terminal box type motors

Model applicable:

HA700-SR, HA700B-SR
HA900-SR, HA900B-SR
HA40 to HA300 and HA40B to HA300B special products

Motor terminal box detail drawing

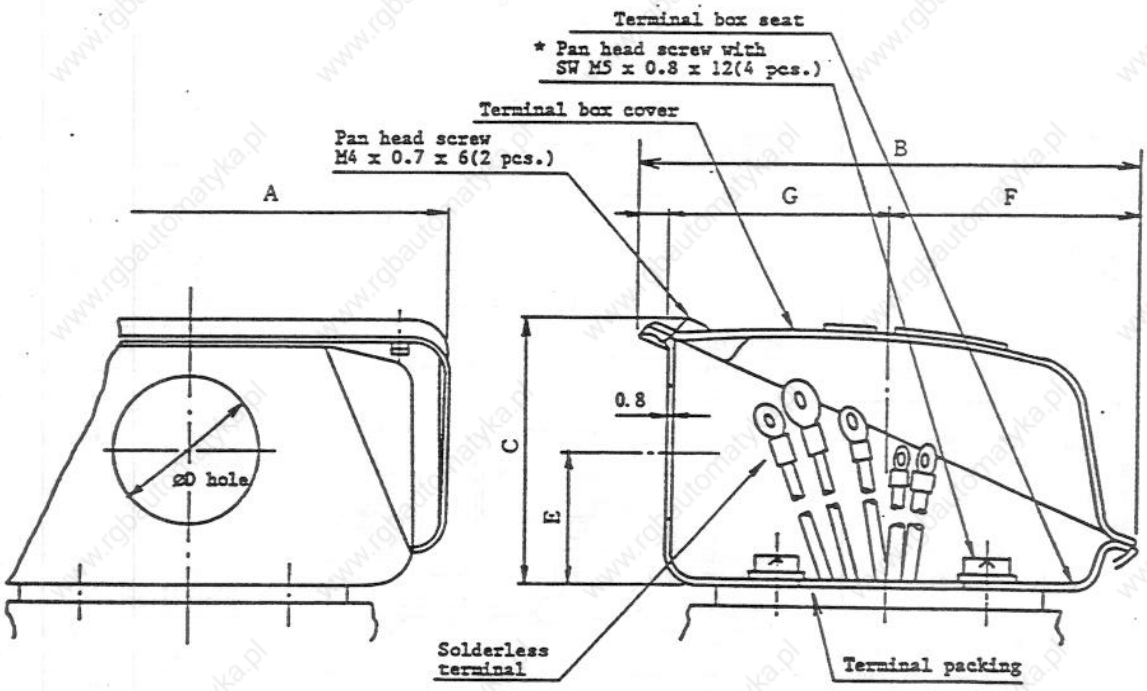


- The direction of the ØD hole of the terminal box can be changed every 90°.
  However, since the ØD hole is positioned as shown in the external dimensional drawings, when the direction is changed, remove the screw marked with the asterisk (*).
- When replacement parts are required, order them from Mitsubishi Electric, and give the parts number listed in the table.

| Model | Dimensions | | | | | | | Model | |
|---|---|---|---|---|---|---|---|---|---|
| | A | B | C | D | E | F | G | Terminal box cover | Terminal box seat |
| HA700, HA700B HA900, HA900B | 131 | 144 | 78 | 35 | 37 | 60 | 76 | M953C771H01 | H952B407H20 |
| Other special model | 80 | 78 | 40 | 22 | 20 | 39 | 33.5 | M953C600H01 | M952C333H20 |

Types of terminal box lead cables

| Servo motor | | | | Servo amplifier | | |
|---|---|---|---|---|---|---|
| Lead cable types | | Lead cable solderless terminal | | Terminal base screw diameter | | |
| Type | Indication | HA700/900 | Special model | MR-S-□-700/900 | MR-S-□-13-300 | Indication |
| Electromagnetic brake (when specified) | Blue<br>Blue | M4 | M4 | | | |
| Motor thermostat | Red<br>Red | M4 | M4 | M4<br>Note(6) | M4<br>Note(6) | $G_1$<br>$G_2$ |
| Motor winding cable | U | M6 | M4 | M5 | M4<br>Note(7) | U |
| | V | | | | | V |
| | W | | | | | W |
| Motor ground | Note(2) | M5 | M5 | M5 | M4 | ⏚ |

Note (1) For the terminal box servo motors for special models, note the model names.
(2) Use one of the screws marked with an asterisk (*) in the terminal box detail drawing as the motor ground terminal.
(3) When an electromagnetic brake is provided, the surge absorber (ECR-C10DK221) can be housed in the motor terminal box. See the mounting drawing N109D132.
(4) The terminals should be connected as shown in the following figure using the screws listed in the above table.
Each connection portion should be insulated with insulation tape wound around several times so that it is securely insulated. When the connection portions are housed in the terminal box, do not damage the insulation.

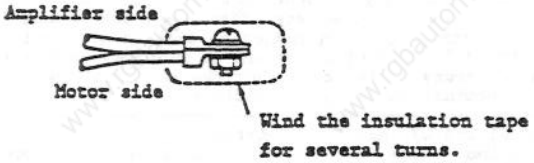


(5) For the cables to be used, see paragraph 1.1.4(3).
(6) The outer diameter of the solderless terminals should be 8.0 mm or less.
(7) The outer diameter of the solderless terminals should be 9.0 mm or less.

## (3) Cables to be used

| Amplifier model | U.V.W (Motor main circuit) Note(2) | Ground cable (Motor ground terminal) Note(2) | G1, G2 (Motor thermostat) Note(3) | (Regeneration option) Note(4) | Electromagnetic brake for excitation Note(5) |
|---|---|---|---|---|---|
| MR-S11-33<br>MR-S12-13A | 2 mm² or more (3.5 mm² or less) | 2 mm² or more (3.5 mm² or less) | 0.5 mm² or more (3.5 mm² or less) | 2 mm² or more | 0.5 mm² or more (3.5 mm² or less) |
| MR-S11-40/80<br>MR-S12-33A/40A/80B | 2 mm² or more (3.5 mm² or less) | 2 mm² or more (3.5 mm² or less) | 0.5 mm² or more (3.5 mm² or less) | 2 mm² or more | 0.5 mm² or more (3.5 mm² or less) |
| MR-S12-80A | 2 mm² or more (3.5 mm² or less) | 2 mm² or more (3.5 mm² or less) | 0.5 mm² or more (3.5 mm² or less) | 3.5 mm² or more | 0.5 mm² or more (3.5 mm² or less) |
| MR-S12-100B | M-axis: 2 mm² or more<br>L-axis: 3.5 mm² or more | M-axis: 2 mm² or more<br>L-axis: 3.5 mm² or more | 0.5 mm² or more (3.5 mm² or less) | 3.5 mm² or more | 0.5 mm² or more (3.5 mm² or less) |
| MR-S11-100 | 3.5 mm² or more ( 8 mm² or less) | 3.5 mm² or more ( 8 mm² or less) | 0.5 mm² or more (3.5 mm² or less) | 3.5 mm² or more | 0.5 mm² or more (3.5 mm² or less) |
| MR-S11-103/200<br>203/300 | 5.5 mm² or more ( 8 mm² or less) | 5.5 mm² or more ( 8 mm² or less) | 0.5 mm² or more (3.5 mm² or less) | 5.5 mm² or more | 0.5 mm² or more (3.5 mm² or less) |
| MR-S11-700/900 | 8 mm² or more | 8 mm² or more | 0.5 mm² or more (3.5 mm² or less) | 5.5 mm² or more | 0.5 mm² or more (3.5 mm² or less) |

Note (1) For reference, the cable size in parentheses above represents a restricted value from the ered cup dimensions of the Cannon plug.

(2) "Internal regulation" for identifying the ground wire is described as follows:

> 140-14 Green color identification of ground wire
>
> 1. A green identification sign shall be placed on any ground wire for any ground work except:
>  (1) when only the ground wire is connected and it can be easily identified.
>  (2) when one conductor in a core cable, tough rubber sheathed cable or cord with a multiple number of conductors is used as a ground wire and when the conductor is a bare wire or has a greenish yellow stripe pattern.
>  [Note] When one conductor in a cable, tough rubber sheathed cable or cord with a multiple number of conductors is used as a ground wire, any other conductor except for one which has a green or greenish yellow stripe pattern cannot be used as a ground wire.
> 2. If any other conductor except for one with a green or greenish yellow stripe pattern is used as a ground wire, it is necessary to indicate that the conductor is a ground wire using green tape and the like at the terminal and proper positions.

(3) The connecting cables of G1 and G2 should be twisted.
(4) Since the regenerative option causes the heat-up, it is necessary to use the flame retardant wire or to process with the flame proofing.
(5) When the electromagnetic brake works in "DC OFF", use a shielded cable.
(6) When the motor is used in an application where it travels, select a cable type with high flexibility.

## Solderless terminal

| Name | For power supply terminal For motor main circuit terminal | For $G_1$,$G_2$ terminal For C and P terminal | For grounding |
|---|---|---|---|
| MR-S11-33 to 300<br>MR-S12-□ | M4<br>D ≤ 9.0mm | M4<br>D ≤ 8.0mm | M4 |
| MR-S11-700,900 | M5 | M4 | M5 |

## 3.4 UTILIZATION OF CONTACTOR FOR BRAKE

Contactor for brake is newly employed on the MR-S11/12 servo amplifier. This contactor can be used to magnetize the motor with brake. Connect the electromagnetic brake cable with terminals EM1, EM2.

Specifications of external brake output contactor

| Model name | DSP1a-DC24V (Matsushita Denko) |
|---|---|
| Rated control capacity (resistance load) | 8A 250V AC/5A 30V DC |
| Max. allowable power of contactor (resistance load) | 2000VA, 150WA |
| Max. allowable voltage/ current of contactor | 380V AC/8A |

Example of brake contactor

(1) "AC OFF"

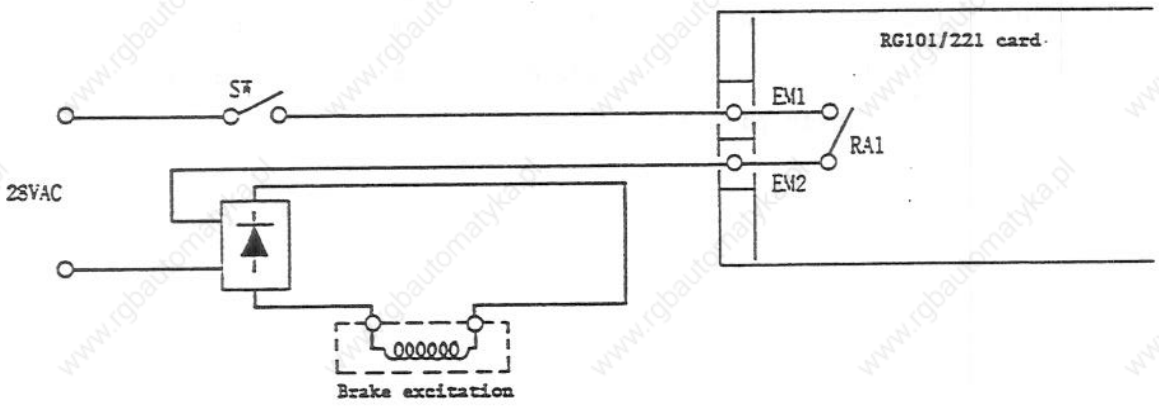


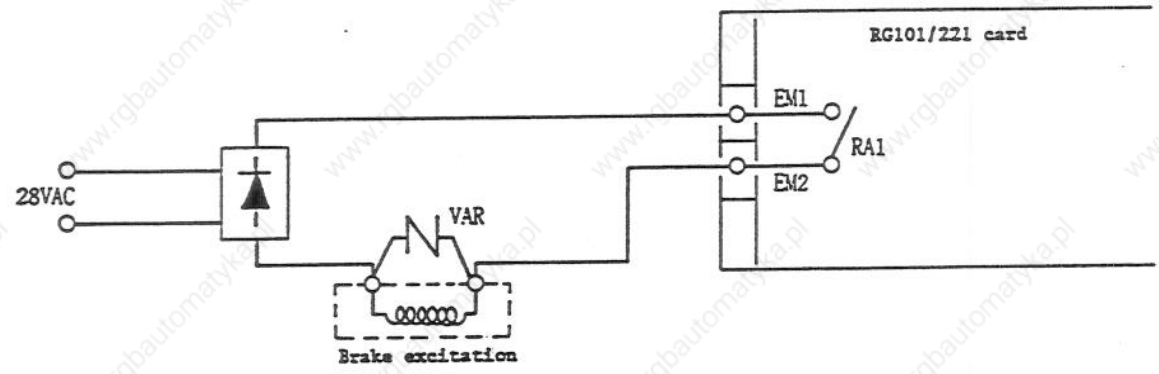


See the specification manual for details of specifications of the electromagnetic brake and usage methods.

# 3.5 SEPARATE TYPE REGENERATION RESISTOR

## 3.5.1 REGENERATION OPTION RESISTOR

Since the motor generates energy in the deceleration state, the amplifier is structured so that the regeneration resistor consumes the regenerated energy. Although the amplifier has a regeneration resistor (see note 1), when a lot of energy is regenerated at once or when the repetitive positioning frequency is high, the regenerated energy cannot be consumed by the built-in resistor. In this case, the regeneration option resistor is used. The method for checking the repetitive positioning frequency is described in paragraph 3.2.3, and can be used to determine the regeneration resistor.

(1) Specification

| Model | Rating power | Resistance | Remarks |
|---|---|---|---|
| MR-RB30 | 600 W | 13 Ω | With metal case and thermostat |
| GZG200W390HMK | 200 W | 39 Ω | 3 parallel connection |

Note (1) MR-S11-700 and MR-S11-900 do not come with a regeneration resistor.
See paragraph 3.2.2.

(2) External dimensional drawing of regeneration option resistor

(a) MR-RB30

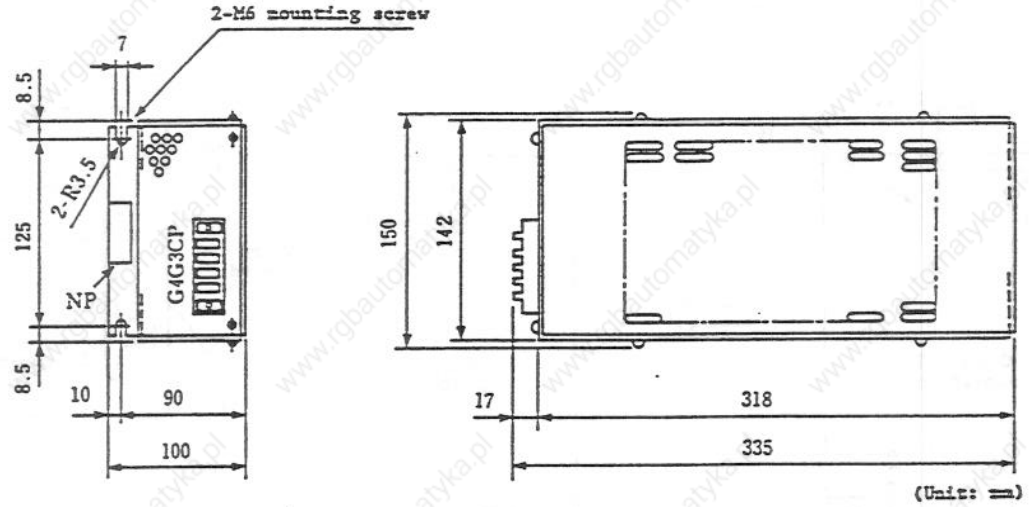


Mounting method:
The option resistor should be mounted in the direction A or B of the following figure.

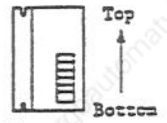


Fig. A

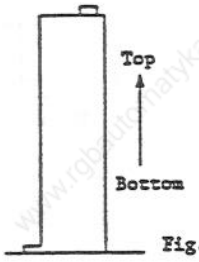


Fig. B

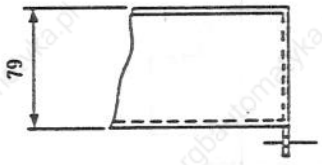


(b) GZG200W390HMK

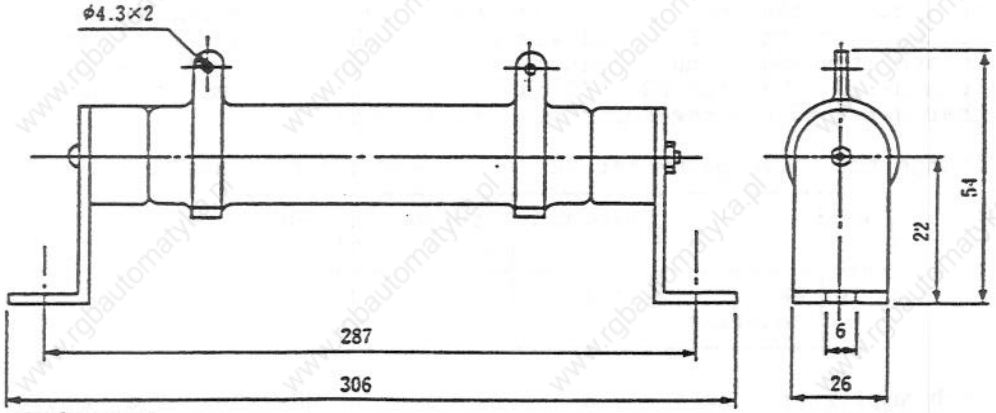


(Unit: mm)

Note 1) Each amplifier requires three GZG2000W390HMK's.
Note 2) When they are used in an adjacent area, they should be 70 mm or more/apart.

(3) Connecting regeneration option resistor

(a) When MR-RB30 is used:

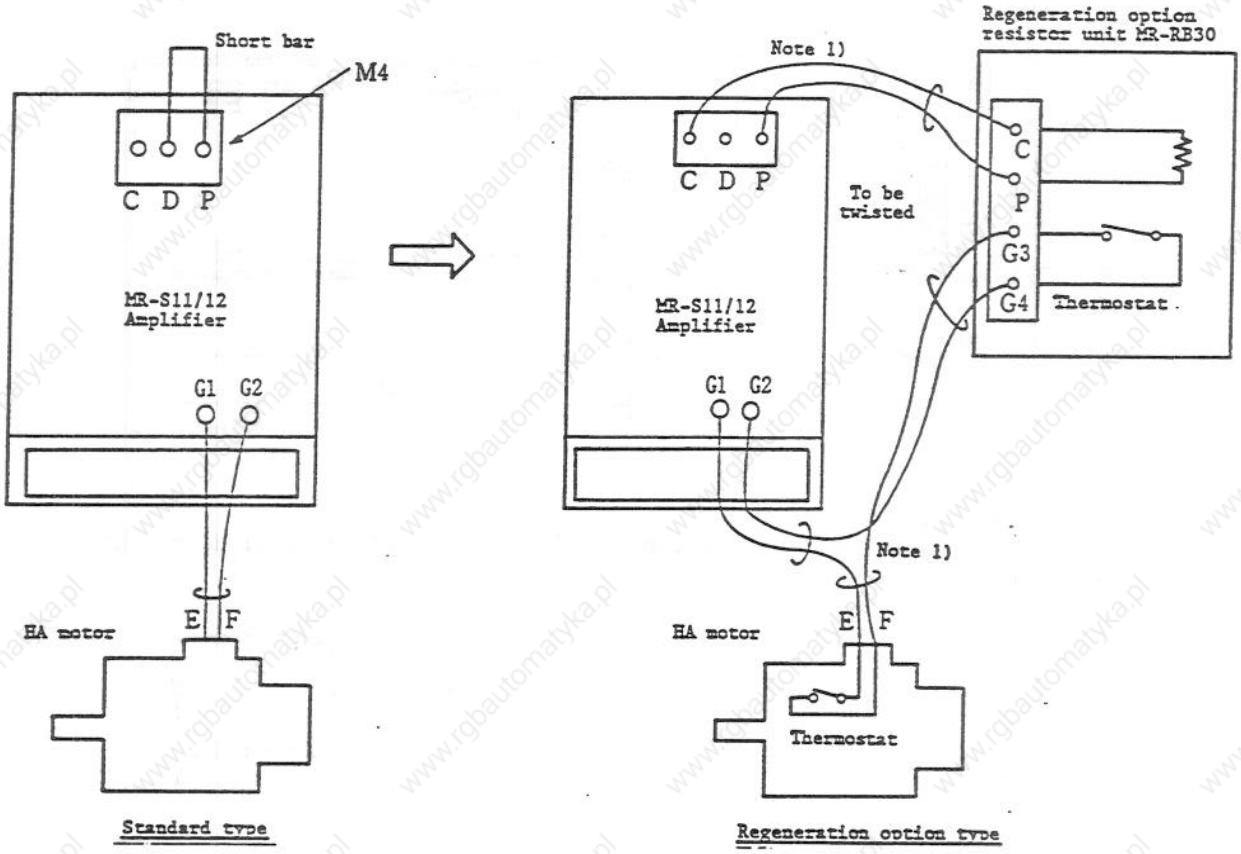


Note 1. When the regeneration option resistor is used, the regeneration resistor in the amplifier is not used. Remove the short bar connected to the D.P. terminals used in the standard type and connect the additional regeneration option resistor to the C.P. terminals. When the MR-RB30 is used, connect the monitor and the thermostat of the regeneration unit in series.

Note 2. Change the servo parameter ORT (regeneration constant).

| No. | | Standard | Presence of additional option |
|---|---|---|---|
| 20 | OR constant | 4680 | 3010 |

Note 3. Each amplifier should use one resistor unit MR-RB30. The sectional area of the wiring material to be used should be 2.0 $mm^2$ or more.

Note 4. The cables to be connected to the regeneration option should be flame-resistant or finished with a flame-resistant coating. For the thickness of the cables, see paragraph 3.3(3).

(b) GZG200W390HMK

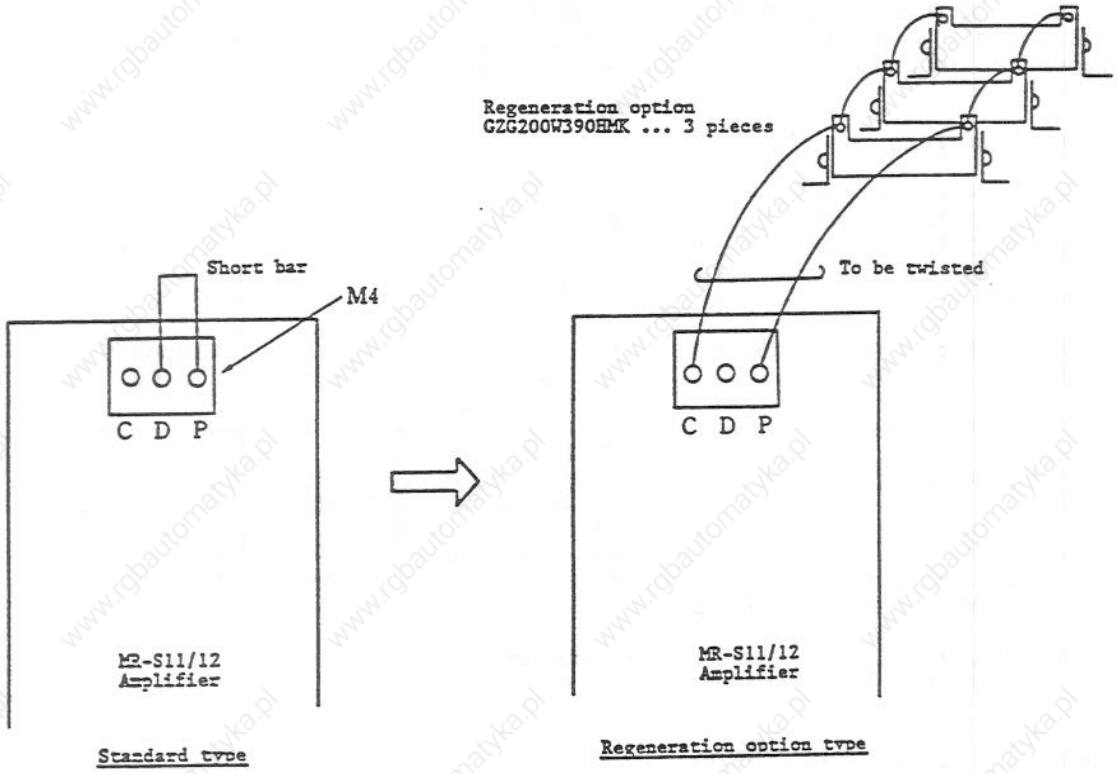


Note 1. When the regeneration option resistors are used, the regeneration resistor in the amplifier is not used. Remove the short bar connected to the D.P. terminals used in the standard type and connect the additional regeneration option to the C.P. terminals.

Note 2. Change the data of the parameter ORT (regeneration constant).

| No. | | Standard | Presence of additional option |
|---|---|---|---|
| 20 | OR constant | 4680 | 3010 |

Note 3. The regeneration option resistors should be used as a set of 3 pieces for one axis.
The cable sectional area should be 2.0 $mm^2$ or more.

Note 4. The regeneration option generates heat.
When the regeneration option is used frequently, it becomes hot. Thus, do not mount the option on a wall which is susceptible to heat. When two or more resistors are used in an adjacent area, place them 70 mm or more apart.

Note 5. The cables for connecting the regeneration option should be flame-resistant or finished with a flame-resistant substance. For the thickness of the cables, see paragraph 3.3(3).

## 3.5.2 SEPARATE TYPE REGENERATION RESISTORS FOR LARGE CAPACITY AMPLIFIER (HA700, 900)

MR-S11-700 and MR-S11-900 do not come with regeneration discharge resistors. Thus, prepare a regeneration resistor. Two types of regeneration resistors are provided. Select one by referring to paragraph 4.4.

(1) Specification

| Capacity | Quantity (*1) | Maximum regeneration capacity | Acceleration/ deceleration frequency (*2) | Resistor type | Maker |
|---|---|---|---|---|---|
| 200 W 20 Ω | 3 pieces | 350 W | MR-S1-700, 10 cycles/min MR-S1-900 8 cycles/min | GZG200W 200HMJ | Nippon Resistor Co., Ltd. |
| 300 W 20 Ω | 3 pieces | 500 W | MR-S1-700, 15 cycles/min MR-S1-900 12 cycles/min | GZG300W 200HMJ | Nippon Resistor Co., Ltd. |

*1. 3 resistors should be connected parallel with each other. The resistance is 6.7 ohms.

*2. Load inertia 1.5 times • Time constant: 200 msec • 2000 rpm, Regeneration capacity: 60 %

(2) External dimensional drawing

Unit: mm
Dimension: GZG200W/GZG300W

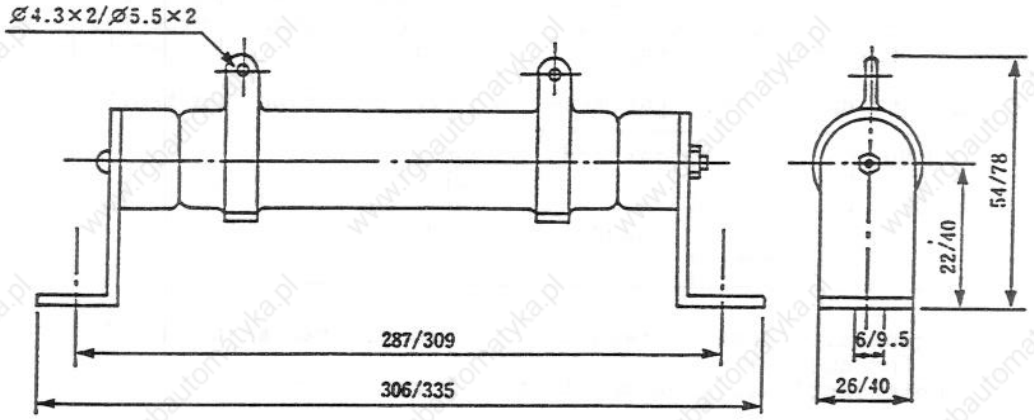

(3) Connecting regeneration resistors for large capacity amplifier

Prepare the three 200 W 20 ohm or 300 W 20 ohm regeneration resistors and connect them to the terminals C and P of the terminal block TE3 of the servo amplifier in parallel.

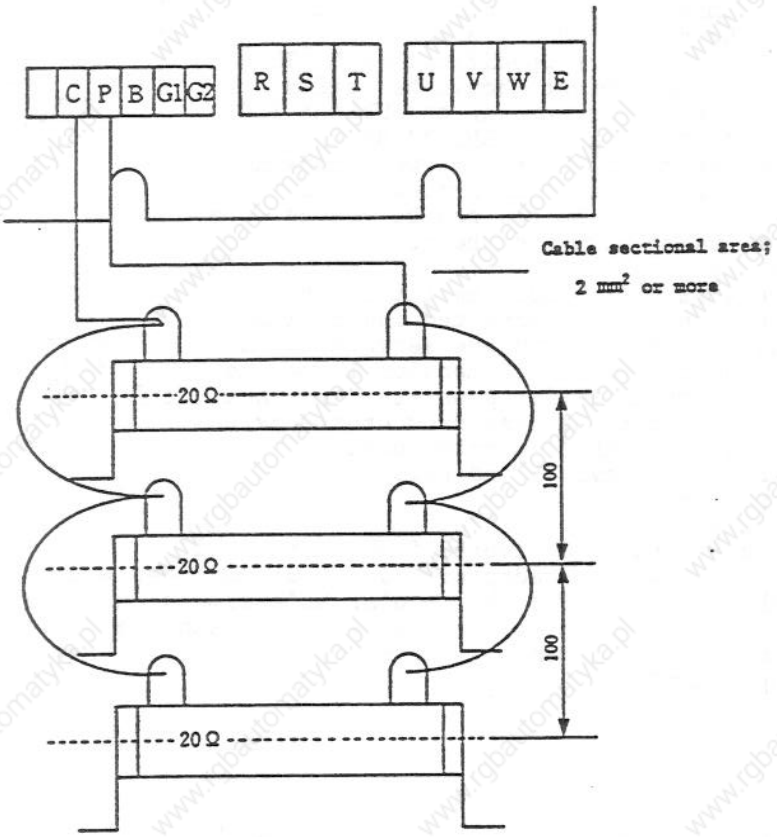


Note (1) Change the data of the ORT parameter (regeneration constant).

| No. | | Standard | Presence of additional option |
|---|---|---|---|
| 20 | OR constant | 4688 | 3000 |

Note (2) The regeneration option resistors should be used as a set of 3 pieces for one axis. The cable sectional area should be 2.0 mm² or more.

Note (3) The regeneration option resistors generate heat. When the regeneration option resistors are used frequently, they become hot. Thus, do not mount the option registers on a wall which is susceptible to heat. When two or more resistors are used in a small area, place them 100 mm or more apart.

Note (4) The cables for connecting the regeneration option resistors should be flame resistant or finished with a flame resistant substance. For the thickness of the cables, see paragraph 3.3(3).

# 3.6 PRECAUTIONS ON INSTALLING SERVO AMPLIFIER

(1) The servo amplifier is designed to be installed in a cabinet such as a power control box. The servo amplifier should not be installed in a place where it is exposed to direct sun light, heat, or open air.

(2) The environmental conditions in the cabinet (such as temperature, humidity, vibration, and atmosphere) should conform to paragraph 1.2, "Servo Amplifier Specification." The cutting machine cabinet should be sealed. Design the cabinet according to "MELDAS 300 Series Connection Manual, BNP-B3484".

(3) Since the servo amplifier is a wall hanging type, securely install it vertically (so that the printed circuit boards can be viewed from the front) using screws or bolts (see the right hand figure).

(4) The servo amplifier should be installed so that it can be easily inspected and replaced. The required space around the servo amplifier is shown in the external dimensional drawing.

(5) Since the servo amplifier generates some heat, it should be installed away from other devices and parts so that the generated heat does not affect the other devices and parts (see the right hand figure).

When the servo amplifier is mounted on the wall:

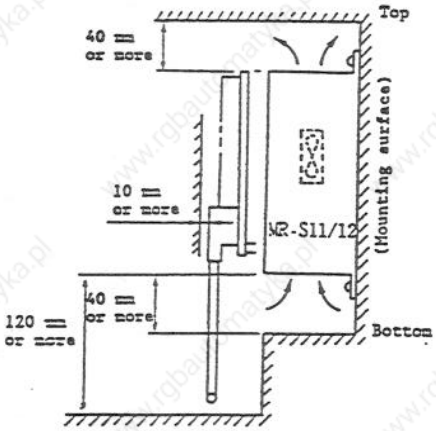


(6) Enclosed mounting
The standard product delivered from Mitsubishi Electric comes with an adapter. If it is enclosed when it is mounted, remove the adapter. For the angular hole dimensions, see the external drawing. In this case, place a packing between the power control box and the unit. When mounting the servo amplifier, refer to the following example.

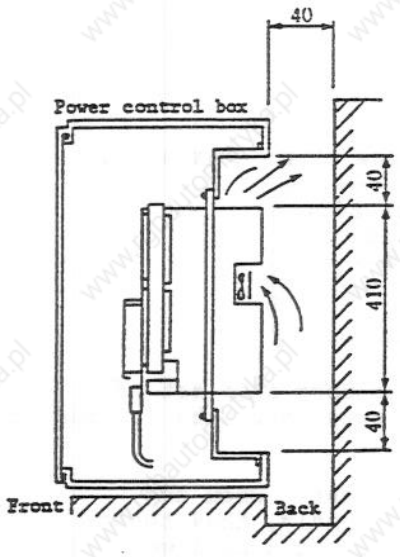


Example 1. When the machine surface is placed behind the power control box, provide air ventilation.

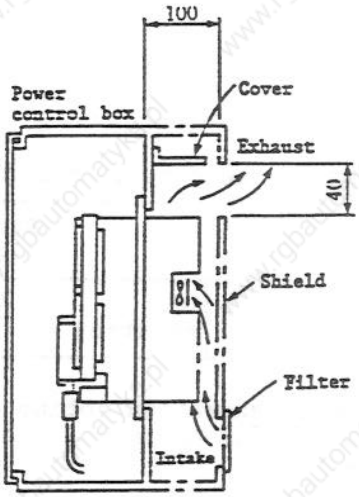


Example 2. When the outdoor air cooling section extends beyond the power control box, make sure cutting chips, do not enter the exhaust section.

Note: When the servo amplifier is installed in a poor environmental (such as a factory where the machine is exposed to oil mist), provide an air filter on the intake section of the shield section marked with a dotted line.

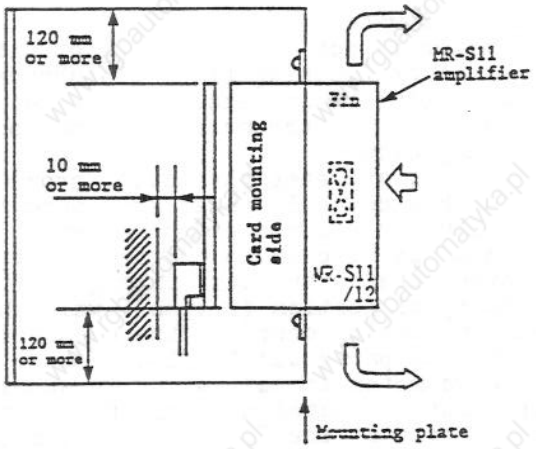


When MR-S11-700 or MR-S11-900 is enclosed and mounted:

(7) When the inside of the cabinet is agitated, do not blow air directly to the servo amplifier (to prevent dust from sticking).

(8) The regeneration option generates heat. When it is used frequently, it becomes very hot. Thus, the regeneration option should not be mounted on a wall which susceptible to heat. The regeneration option should be mounted away from the wall surface (70 mm or more).

(9) For noise protection, see "MELDAS 300 SERIES CONNECTION MANUAL."

(10) The bus connection cable (except for AMP-AMP cable whose length is less than 1 m) and the detector cable which are led to the servo amplifier and the detector cable leading to the detector I/F box should all be clamped as shown in the right hand figure. Since this clamp is used to support and shield the cable and to stabilize the system to prevent malfunctions caused by noise, the clamp is very important. Thereby, the clamp should be securely mounted.
For details, see "MELDAS 300 SERIES CONNECTION MANUAL."

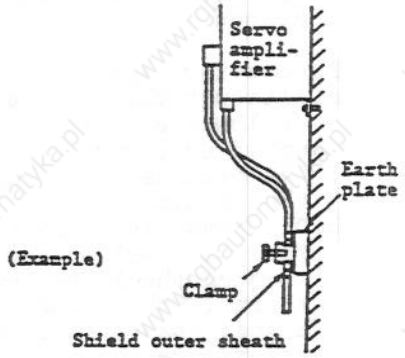


Cable clamp drawing

# 3.7 PRECAUTIONS ON INSTALLATION OF SERVO MOTOR AND DETECTOR

(1) Precautions for oil and water

a. Since the servo motor is not made in a strict water (oil) resistance structure, do not splash cutting fluid or lubrication oil on the servo motor. If cutting fluid, etc., enters the servo motor or the detector, the insulation of the motor coil may be damaged or a detector failure may occur.

b. If cutting fluid, etc. splashes the motor, provide a protection cover on the motor. If this cover is necessary, note the joints, bends, shape, and dimensions of the protection cover.

c. When the servo motor is exposed to cutting fluid and the protection cover cannot prevent the servo motor from getting splashed, use the splash protection specification (P type), which has high water resistance. Alternatively, consider the use of the oil-proof type connector described in paragraph 5.4.10.

d. Do not use the servo motor if part of it is submerged in oil or water. The servo motor located near the floor should be provided with a water drain path on the floor to contain the flow. Do not clog the water drain path with cutting chips.

e. Check the drain path of oil and water on a moving table and check the slide cover. Take care of the following points.

(e-1) When the table arrives at a certain position, the drain hole comes to the upper portion of the motor. Thus, oil and water splashes the motor.

(e-2) Depending on the movement of the slide cover and table, oil or water which stays on the slide cover or the table splashes the motor.

(e-3) Depending on the shrinkage or expansion of the cover, oil or water which stays on the slide cover leaks from the wiper and drops on the motor.

f. The servo motor should be installed in a well ventilated place where oil and water do not splash it, and where it can be easily mounted or dismounted.

(2) Precautions against gear oil

a. Although the servo motor can be mounted horizontally or at the upper or lower end of the axis, when the servo motor is mounted at the upper end, protect oil from the gear box from entering the motor on the machine side. In this situation, the oil seal is not adequate protection.

b. Oil level and pressure of gear box
The oil level of the gear box where the servo motor is horizontally mounted should be lower than the oil seal rip of the servo motor shaft (both in the stop and rotation states). If the oil level is higher than the oil rip, the oil may enter the motor. Some servo motors are not provided with shaft end oil seals. Thus, when ordering the servo motor, check the servo motor type. To prevent the inner pressure of the gear box from increasing, provide an intake-hole on the gear box.

(Machine side)

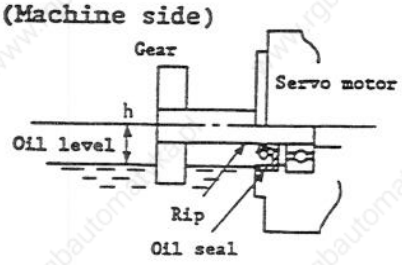


| Model | HA053 HA13 | HA40 HA23 HA33 | HA43 HA80 HA83 | HA100,HA103 HA200,HA203 HA300,HA700 | HA900 |
|---|---|---|---|---|---|
| Height from center of motor shaft h(mm) | 8 | 10 | 20 | 25 | 30 |

(3) Detector

a. When transporting and installing the servo motor, avoid any shocks to the detector on the servo motor. To prevent the detector from colliding with another object, being walked on, or being damaged by a tool or work which falls, provide a protection cover around the detector. Any design where a coupling should be struck to the motor shaft should be avoided to prevent detector trouble.

b. The machine should be designed so that the detector connector is in "A direction". Although other directions (B direction, C direction and Do direction) can be assigned, since the setting change of the servo amplifier becomes complicated, resulting in incorrect combination, other directions should be avoided.

Symbol of direction of detector connector (The "A" side is standard.)

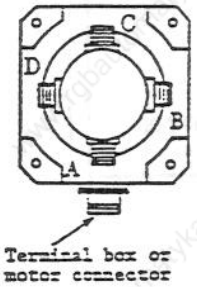


c. The relationship between the motor and the detector has been precisely adjusted (the magnetic polarities have been matched). If the detector is replaced or the direction of the detector connector is changed ignoring the relationship, the servo motor becomes out of control. The relationship between the detector and the motor cannot be changed after delivery from Mitsubishi Electric.

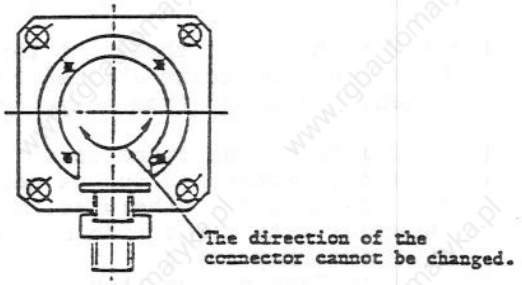


(4) Connector and cable

a. The connector should be located so that it faces downwards. When the motor is installed vertically or on an incline provide a cable trap.

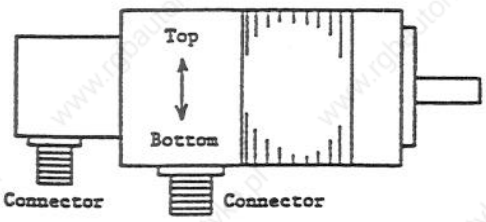


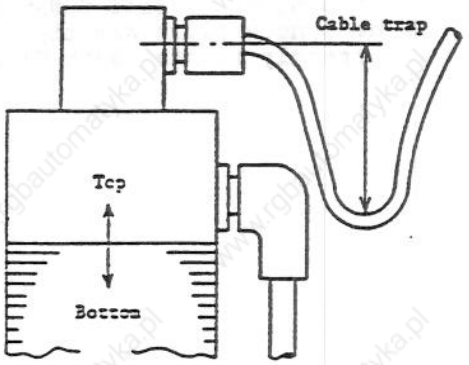


b. The conventional cannon connectors are not water proof.

c. The cables may lead oil and water to the motor and the detector, causing bad effects. Make sure that the cables do not drip or sit in oil or water. (see the following figure).

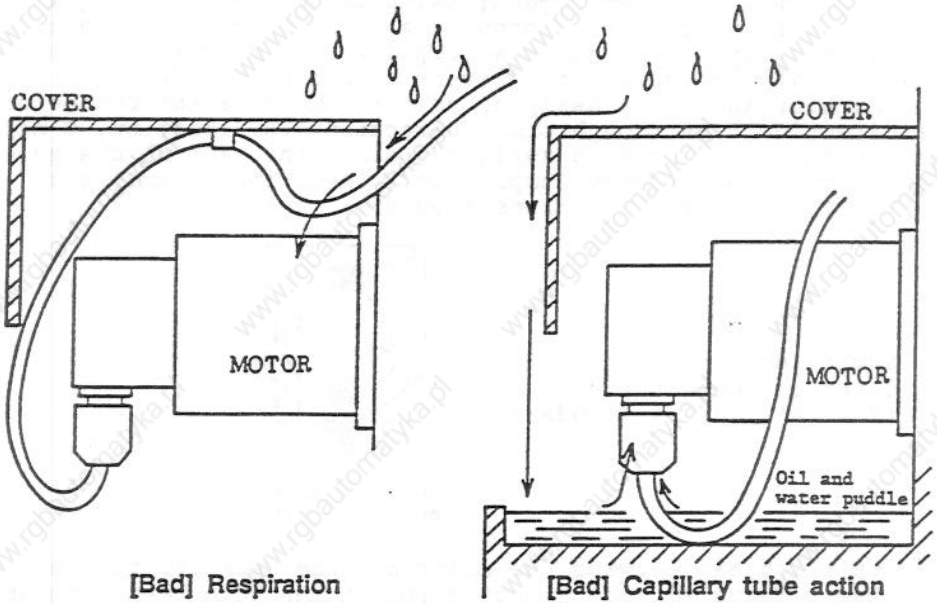


d. Follow the cable clamping method carefully and avoid bending the cable. Do not allow the dead weight of the cable to stress the cable connections.
In operations in which the motor moves, the cable bending radius should be determined from the required bending life and the cable type.

e. Prevent the outer sheath of the cable from being cut by sharp cutting chips and from being abraded by an edge of the machine. In addition, prevent the cable from being walked on or run/over by automobiles.

(5) Attaching/detaching connectors

a. While the machine is on, do not attach or detach any connector to or from the machine, otherwise, the motor may be damaged. In addition, dangerous situations such as abrupt motor start, drop, or generation large arcs may occur.
Tie each Cannon connector with a wire.

b. Even if the power is turned off, the absolute value detector is backed up by a battery.
Thus, when the detector cable is disconnected, the absolute position is lost. Tie this connector with a wire and attach a warning: "DO NOT DISCONNECT THIS CONNECTOR EVEN WHILE POWER IS OFF."

c. The Cannon plugs are tightened manually. Provide enough space to correctly tighten each Cannon plug.

(6) Applications involving vibration

Tie the Cannon plugs and cable clamps of the motor and detector with wires. Clamp carefully to avoid vibration. Do not allow the dead weight of the cable to stress the cable connections. Check the clamp carefully for the relationship between the cable finish diameter and the clamp size etc. Make sure that the clamps are tight.
Include the tightening of the Cannon plugs and the clamps in the machine manual as a periodical inspection item.

- Safety holes for protecting connector separation

If the coupling nut has safety holes and the connector is exposed to strong shock or vibration, pass a wire through the holes and fasten the connector to protect the connector from being disconnected.
Under normal conditions, this treatment is not required (extracted from a catalog).

- Since the cable clamp is provided with two safety holes which are similar to the connector, it can also be tied.
- The safety holes slightly differ in structure depending on the manufacturer.

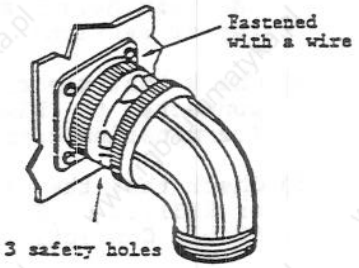


- Fixing wire (0.813 Ø annealing stainless steel wire)

The QQ-W-423 FORM-1 FS304 CD-A 0.032 (inches) is recommended for its mechanical strength and easy machining.

- Most suitable tightening torque of coupling nuts

The connector is designed so that it can be easily tightened by turning the coupling nut rather than using a special tool. When the connector is exposed to vibration, it should be tied with a wire.
There are no regulations for the tightening torque in MIL standard.
When this connector is used for an airplane, the connector should be tied with a wire by the user.

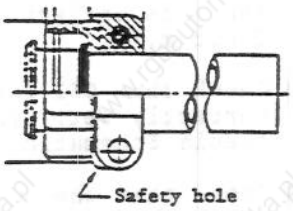


(7) Any design which requires modification, disassembling, or additional machining should be avoided.

## 3.8 PRECAUTIONS FOR POWER ON AFTER INSTALLATION

(1) Before power ON
After the main circuit cables and required cables have been connected, but before turning on the power, check the following items.

1) Check that the 3ø 200/220 VAC has been connected to the terminals R, S, and T of the terminal block.

2) Check that the motor power cable has been connected to the terminals U, V, and W of the terminal.

3) When a regeneration option resistor has not been used, check to see if the terminals C and P of the terminal block (upper section) have been short-circuited.
When the regeneration option resistor has been connected, check that it has been connected to the terminals C and P of the terminal block (upper section).
When the regeneration option resistor has been connected, check that the terminals D and P of the terminal block are not short-circuited (upper section).

4) Check that the cable from NC or from CN1B of another axis has been connected to CN1A. Check that the cable from CN1A or the cable end (termination connector) has been connected to CN1B.

5) Check that the cable from the detector has been connected to RG101 or RF31/33. (For the correct connection method, see Appendix 2, "Cable Connection Drawing."

6) Check that the RG101 card has been correctly mounted on the unit. (Check that the projected parts from the small holes of CON1 and CON2 are aligned with their top planes.
(For the correct connection method, see Appendix 2, "Cable Schematic Diagram.")

7) Check that CS1 (axis number setting) of the RG101 card has been correctly set. (For the correct setting method, see Appendix 2, "Cable Schematic Diagram.")

8) Check that the RG101 card and RF31/33 cards have been correctly set. (For the correct setting method, see Appendix 2, "Cable Schematic Diagram.")

9) Check that the servo parameters have been correctly set on the NC screen. (For the correct setting method, see Appendix 2, "Cable Schematic Diagram.")

10) When using the motor for the first time and if an abnormality is suspected, before connecting NC and the servo amplifier, turn the NC power on and then decrease the values of ILP and ILN of the servo parameters. This limits the torque of the motor, thereby reducing the degree of an abnormality.

(Example) 13. ILP 1230 → 500
14. ILN -1230 → -500

(2) After power ON

After the power is turned on, the 7-segment display indicates data.

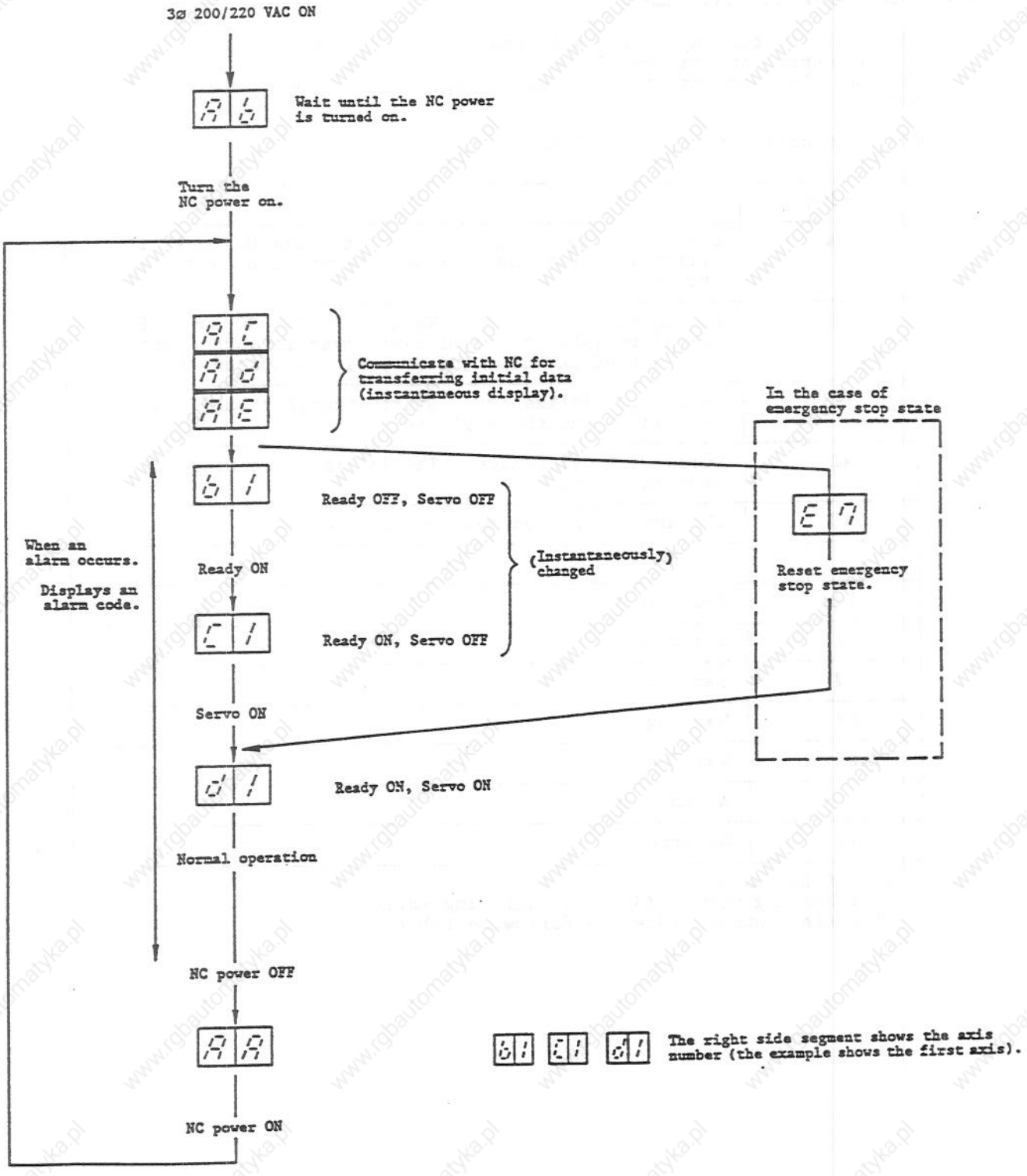

# 4. TROUBLESHOOTING

## 4.1 7-SEGMENT DISPLAY

The state of the amplifier is indicated by the 7-segment display located at the center of the amplifier.
When an alarm occurs, the 7-segment display shows the related alarm number.

Status display of MR-S10 amplifier

| Display | |
|---|---|
| AA | During initialization. Wait until the NC power is turned on (when the NC power is turned on and then turned off). |
| Ab | During initialization. Wait until the NC power is turned on (when the amplifier power is turned off and then turned on while the NC power is turned off). |
| AC | During initialization. Starts transferring data between NC and the amplifier. |
| Ad | During initialization. The initial parameters have been received. |
| AE | The initialization has been completed. |
| | |
| b# | Ready OFF |
| C# | Servo OFF |
| d# | Servo ON |
| E* | Warning |
| A* | Warning |
| ** | Alarm |
| •• | WD error |

\# : Axis number
* : Warning number (See the following table.)
** : Alarm number (See the following table.)

## Servo alarms and warnings

| ** | Abbreviation | Name | Reset | Axis/Cm |
|---|---|---|---|---|
| 10 | UV | Under Voltage | PR | C |
| (11) | AE | Axis Error | AR | A |
| 12 | MEI | Memory Error 1 | AR | C |
| 13 | CE | external Clock Error | PR | C |
| 14 | WD | Watch Dog error | PR | C |
| 15 | ME2 | Memory Error 2 | PR | A |
| 16 | RD | Rotor position Detect error | PR | A |
| 17 | BE | Board Error | PR | A |
| | | | | |
| 20 | NS1 | No Signal1 (main board) | PR | A |
| 21 | NS2 | No Signal2 (add on board Enc) | PR | A |
| 22 | NS3 | No Signal3 (add on board 1X) | PR | A |
| 24 | PG | Phases Grounded detect | PR | C |
| 25 | BA | Battery Alarm | AR | C |
| (26) | NA | No control Axis error | PR | C |
| (27) | ICE | Internal Clock Error | PR | C |
| 30 | OR | Over Regeneration | PR | C |
| 31 | OS | Over Speed (2400/3600rpm) | PR | A |
| 32 | OC | Over Current | PR | A |
| 33 | OV | Over Voltage | PR | C |
| 34 | DP | Data Parity | PR | C |
| 35 | DE | Data Error | PR | A |
| 36 | TE | Transfer Error | PR | C |
| 37 | PE | Parameter Error (initialize) | PR | A |
| 42 | FE1 | Feedback Error 1 | PR | A |
| 43 | FE2 | Feedback Error 2 | PR | A |
| 45 | OHF | Fin Over Heat | NR | C |
| 46 | OHM | Motor Over Heat | NR | A |
| | | | | |
| 50 | OL1 | Over Load (250% 1min) | NR | A |
| 51 | OL2 | Over Load (C.LIMIT 0.5sec) | NR | A |
| 52 | OD1 | Over Droop 1 | NR | A |
| 53 | OD2 | Over Droop 2 | NR | A |
| (54) | AOL | Amp Over Load | NR | C |
| 55 | EM | EMergency | NR | C |
| 56 | OA | Other Axis alarm | NR | C |
| 57 | | | | |
| | | | | |
| E0 | WOR | Warning Over Regeneration | * | C |
| E1 | WOL | Warning Over Load | * | A/C |
| E2 | | | | |
| E3 | WAC | Warning Absolute Counter error | * | A |
| E4 | WPE | Warning Parameter Error | * | A |
| E5 | WAB | Warning ABsolute detect error | * | A |
| E6 | WOT | Warning Over Travel | * | A |
| E7 | NCE | NC Emergency | | C |
| A0 | WAT | Warning Absolute first Transmission | * | A |
| A1 | WAS | Warning Absolute Serial signal | * | A |
| A2 | WAV | Warning Absolute battery Voltage | * | C |
| A3 | WAN | Warning Absolute cable No connection | * | A |
| A4 | WAP | Warning Absolute Position error | * | A |
| A5 | WAR | Warning Absolute Resolver | * | A |

Note 1) Reset: PR: When the NC power is turned off, the reset operation takes place.
NR: When the NC is reset, the reset becomes valid.
* : It shows a warnings rather than the servo OFF.

Note 2) Regarding Axis/Cm A: Alarm occurs at each axis, C: Common alarm within amplifier.

Note 3) Alarm No. in brackets indicates the alarm which exists only in MR-S12.

# 4.2 TROUBLESHOOTING

When a problem occurs, refer to the following items and take proper precautions.

4.2.1 When a servo alarm occurs:
4.2.2 When an "amplifier not mounted" alarm occurs(NC side alarm):
4.2.3 When the motor vibrates or generates a vibration sound:
4.2.4 When the cutting surface or circularity is poor:
4.2.5 When an overshoot occurs during positioning:
4.2.6 When a surge feed occurs in a pulse feed operation:
4.2.7 Even if the power is turned on, the 7-segment display does not show any data or it shows [00] :

4.2.8 Even if the NC power is turned on, the 7-segment display does not change from [A6] [AA] or it momentarily shows [AC], [Ad], [AE] and then returns to [A6] [AA] .

Note 1) There are alarms which are limited to one axis only and alarms common to all axes. During troubleshooting, alarms which are related to the axes are indicated with the mark of *. When this mark is shown, make sure of which axis to examine.
Please remember that the other axis alarm [56] occurs on the normal axes.

Note 2) In the subsequent explanation, the cards are assigned with the following code name.

| Name of servo amplifier | MR-S11 | | | MR-S12 | |
|---|---|---|---|---|---|
| Code name | 40 to 100 | 103 to 300 | 700/900 | 13A to 33A | 40A to 100A |
| Main card | RG101 | | | RG201 | |
| Base card | RG101 | | | RG221 | |
| Power card | RG11 | RG10 | None | RG21 | RG20 |
| Add-on card | Varies depending on the servo system. See paragraphs No.1, No.2. | | | | |

## 4.2.1 WHEN A SERVO ALARM OCCURS:

(1) Alarm No. 10 : Under voltage

The voltage drop of the 3ø 200/220 VAC is detected (in phases S and T).

| | Cause | Verification method | Remedy |
|---|---|---|---|
| 1 | The voltage of 3ø 200/220 VAC power drops below 160 V (±5%). | Check the input voltage using the volt meter. | Check the power supply facility. |
| 2 | The 3ø 200/220 VAC power instantaneously stops. | Check that no instantaneous power failure occurs in the input voltage with the synchroscope for approx. 25 msec or more at 200 VAC. | |

(2) Alarm No. 11 : Axis error (Exists only on MR-S12)

It shows that an error is detected concerning the selection of the rotary switch in the amplifier.

| | Cause | Verification method | Remedy |
|---|---|---|---|
| 1 | Rotary switch is set at 6 - E. | Confirm the rotary switch. | Correct the setting. |
| 2 | The same axis is selected with L axis and M axis. | Confirmation of rotary switch (Are the numbers duplicated?) | Correct the setting. |

(3) Alarm No. 12 : Memory error 1

During the initialization, an EPROM check sum error, SRAM error, or 2-port RAM error is detected.

| | Cause | Verification method | Remedy |
|---|---|---|---|
| 1 | A check sum error occurs in EPROM. | Replace the EPROM with a normal one of another axis. | Replace the EPROM with a new one. |
| 2 | A check error occurs in SRAM or 2-port RAM. | Replace the main card with a normal one of another axis. Change the CS1 switch. See 5.1, "Replacing Servo Amplifier Control Card." | Replace the main card. |

(4) Alarm No. 13 : External clock error

The clock sent from NC is abnormal. The software of the servo amplifier does not complete the process in the predetermined time.

| | Cause | Verification method | Remedy |
|---|---|---|---|
| 1 | The connector between NC and amplifier or between amplifiers is imperfectly connected. | Visually check the cable connections.<br>• Main card CN1A, CN1B<br>• NC side | Connect the cables properly. |
| 2 | The software of the servo amplifier does not operate properly. | | Replace the main card. |
| 3 | The cables between NC and the amplifier and/or between amplifiers are defective. | Replace the cables with those of another axis and test the alarm. | Replace the cables. |

(5) Alarm No. 14 : Watch dog error

The software of the servo amplifier does not complete the process in the predetermined time.

| | Cause | Verification method | Remedy |
|---|---|---|---|
| 1 | EPROM has not been correctly mounted. | Visually check that EPROM has been mounted at the location described.<br>Check that the pins of EPROM have not been bent.<br> 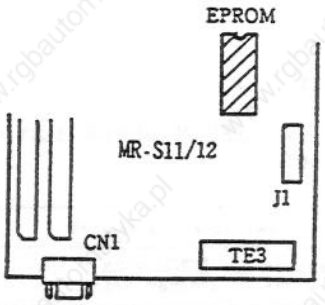 | Correctly mount EPROM. |
| 2 | EPROM has been broken. | Replace EPROM with one from another axis. | Replace EPROM. |
| 3 | The main card or add-on card is defective. | Replace the card with one from another axis. At the time, it is necessary to change the CS1 switch position of the main card. For details, see 5.1, "Replacing Servo Amplifier Control Card." | Replace the defective card. |

(6) Alarm No. 15 *: Memory error 2

While initial data is transferred with NC during the initialization, a parity error occurs or an error occurs in the 2-port RAM.

| | Cause | Verification method | Remedy |
|---|---|---|---|
| 1 | The cables between NC and the amplifier and between the amplifiers are defective. | Replace the cables with one from another axis and test the alarm. | Replace the defective cables. |
| 2 | A loud noise enters the cables between NC and the amplifier and/or between the amplifiers. | Remove the relays and contactor which are turned on and off during the initialization. | Avoid noise. See 3.5, "Precautions for Installing Amplifier." |

(7) Alarm No. 16 *: Rotor position detect error

All the outputs of the phases U, V, and W of the OSE5K-6-12-108 detector (mounted on the motor non-load side) become "H" or "L".

| | Cause | Verification method | Remedy |
|---|---|---|---|
| 1 | The connector of the detector has been removed. | Check that the connector is properly connected.<br>• Main card CN2<br>• Detector side Cannon connector | Correctly connect the connector. |
| 2 | The cable between the amplifier and the detector has been imperfectly connected. | (1) In the emergency stop state observe the pins, 4,5, and 6 of the main card J4 with the synchroscope and check whether all of them are "H" or "L" (move the cable to check).<br>(2) Replace the cable with one from another axis. | Replace the cables between the amplifier and the detector. |
| 3 | The detector is defective. | Replace the detector with one from another axis (make sure that the zero point has moved lightly.) | Replace the detector. |
| 4 | The servo parameter STY has been incorrectly set. | When the detector has not been connected to the main card, the parameter has been set in the state where they are connected. | Correctly set the servo parameter STY. For details, see 7, "Detail Description of Servo Parameters." |
| 5 | The servo parameter MTY has been incorrectly set. | When the standard encoder (OSE5K-6-12-108) has not been connected to the main card, the speed detector setting parameter (ENT) had been set to 0 or 1. | Correctly set the servo parameter STY. For details, see 7, "Detail Description of Servo Parameters." |

(8) Alarm No. 17 *: Board error

During the initialization, the A/D converter on the main card does not operate correctly.

| | Cause | Verification method | Remedy |
|---|---|---|---|
| 1 | If the main card is defective: | Replace the main card with a normal one from another axis. Then, change the position of the switch CS1 of the main card. For details, see 5.1, "Replacing Servo Amplifier." | Replace the card. |

(9) Alarm No. 20 *: No signal 1

Both the differential signals of the encoder connected to the main card become "H" or "L".

| | Cause | Verification method | Remedy |
|---|---|---|---|
| 1 | The connector of the detector is imperfectly connected. | Visually check the connector.<br>• Main card CN2<br>• Detector side Cannon connector. | Connect the connector properly. |
| 2 | If the cable between the amplifier and the detector is defective: | Test the cable with a normal one from another axis. | Replace the cable with a new one. |
| 3 | If the detector is abnormal: | Test the detector with a normal one from another axis (note that the zero point deviates slightly.) | Replace the detector with a new one. |

(10) Alarm No. 21 *: No signal 2

Both the differencial signals connected to the add-on card become "H" or "L".

| | Cause | Verification method | Remedy |
|---|---|---|---|
| 1 | If the connector of the detector is imperfectly connected: | Visually check the following connector.<br>• Detector connector of add-on card.<br>• Detector side Cannon connector. | Connect the connector properly. |
| 2 | If the cable between the amplifier and the detector is defective: | Test the cable with a normal one from another axis. | Replace the cable with a new one. |
| 3 | If the detector is defective: | Test the detector with a normal one from another axis (note that the zero point deviates slightly.) | Replace the detector with a new one. |

(11) Alarm No. 22 : No signal 3

The output voltage of the resolver connected to the RF33/332 card becomes 0 V.

| | Cause | Verification method | Remedy |
|---|---|---|---|
| 1 | If one of the cables of the detector is imperfectly connected.<br><br>Card name / Check pin<br>RF33: CP2-1 CP2-3<br>RF332: CP3-1 CP3-3 | (1) Visually check<br>• Detector connector of add-on card.<br>• Detector side Cannon connector<br>(2) Check using a synchroscope.<br> 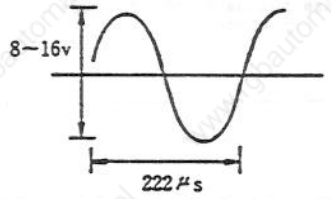 <br><br>(Emergency stop state) | Correctly connect the cable. |
| 3 | the cable between the lifier and the detector defective: | Test the cable with a normal one from another axis. | Replace the cable with a new one. |
| | If the RF33/332 card is defective:<br><br>Card name / Check pin<br>RF33: CP1-1 CP1-3<br>RF332: CP2-1 CP2-2 | (1) Check using the synchroscope.<br> 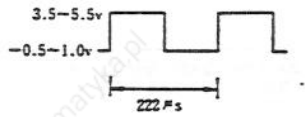 <br><br>(2) Same as 1-(2)<br>(Emergency stop state) | Replace the RF33/332 card with a new one. |
| 4 | If the detector is defective: | Test the detector with a normal one from another axis. | Replace the detector with a new one. |

(12) Alarm No. 24 : Phases grounded detect

If one of phases U, V, or W of the amplifier output is grounded:

| | Cause | Verification method | Remedy |
|---|---|---|---|
| 1 | If the motor cable is defective. | Check the resistance between the terminal block TE1 and each of phases U, V, and W using the circuit tester. | (1) Check the cable connections of the phases U, V, and W of the terminal block.<br>(2) Check that the motor connector and Cannon connector are free of oil.<br>(3) Replace the motor cable with a normal one. |
| 2 | If the base card is defective, Note 1. | Test the base card with a normal one. | Replace the base card with a new one. |

Note 1: In the case of MR-S11: Base card RG101
In the case of MR-S12: Base card RG22:

(13) Alarm No. 25 : Battery alarm

If the battery voltage of the RF33/332 card drops:

| | Cause | Verification method | Remedy |
|---|---|---|---|
| 1 | When the battery voltage drops. | Turn off the power and measure the voltage at both electrodes of the battery. When the voltage drops below 3.20 V, the battery alarm activates. | For two or three consecutive days, turn the power on for 8 hours a day. |
| 2 | The battery is defective. | Even if the above instructions are followed, the battery alarm occurs: | Replace the battery with a new one. For details of how to replace the battery, see 2.2. For details of operation after the replacement, see 8.4. |

(14) Alarm No. 26 : No control axis error (Exists only on MR-S12.)

Rotary switch on the main card is set at "F" and an overcurrent is conducted through the AC bus which is not controlled.

| | Cause | Verification method | Remedy |
|---|---|---|---|
| 1 | Setting error of rotary switch. | Visual (Upper left switch; of main card) | Straighten the matter. Remember that this error does not trigger the alarm without other cause(s). |
| 2 | Trouble concerning on the power of axis which is not used. | Same as the check method of alarm 32. | |
| 3 | Defective base card. | Try to exchange with the base card of another normal amplifier. | Replace the base card. |
| 4 | Defective main card. | Try to exchange with the main card of another normal amplifier. It is necessary to switch AXES SELECTION SW. | Replace the main card. |

(15) Alarm No. 27 : Internal clock error (Exists only on MR-S12.)

Alarm occurs when the internal clock of the main card has stopped.

| | Cause | Verification method | Remedy |
|---|---|---|---|
| 1 | Defective main card. | Try to exchange with the bas card of another normal amplifier. | Replace the main card. |

(16) Alarm No. 30 : Over Regeneration

Overheating of the regeneration resistor is detected. (Because overheating is detected by software, when the power of the servo amplifier is turned on and then turned off, the value being computed is cleared. Therefore, after the alarm occurs, when the power of the servo amplifier is repeatedly turned off and then on, the resistor may burn.)

| | Cause | Verification method | Remedy |
|---|---|---|---|
| 1 | If the servo parameter ORT is incorrectly set: | ORT = 4680 (Absence of option regeneration resistor)<br>ORT = 3010 (Presence of option regeneration resistor) | Correctly set the parameter. |
| 2 | If the frequency of the acceleration/deceleration exceeds the value in the specification: | Using the operation program where the alarm has occurred, measure the number of acceleration times in the rapid traverse operation for one minute and check where the frequency is within the value in the specification.<br>See Appendix 5, "Checking Positioning Repeatability." | (1) Decrease the repeatability frequency.<br>(2) Decrease the rapid traverse rate.<br>(3) If no option regeneration resistor was provided, mount one. |
| 3 | If the regeneration power transistor is short-circuited and broken: | Check the resistance of the regeneration power transistor using the circuit tester.<br> 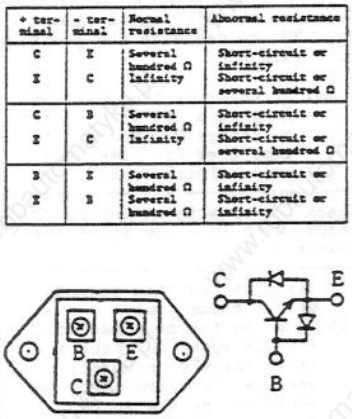 | Replace the regeneration power transistor with a new one or replace the entire unit with a new one. |

| + terminal | - terminal | Normal resistance | Abnormal resistance |
|---|---|---|---|
| C | E | Several hundred Ω | Short-circuit or infinity |
| E | C | Infinity | Short-circuit or several hundred Ω |
| C | B | Several hundred Ω | Short-circuit or infinity |
| E | C | Infinity | Short-circuit or several hundred Ω |
| B | E | Several hundred Ω | Short-circuit or infinity |
| E | B | Several hundred Ω | Short-circuit or infinity |

(17) Alarm No. 31 : Over speed

A speed exceeding the allowable value of the motor is detected.

| | Cause | Verification method | Remedy |
|---|---|---|---|
| 1 | If the servo parameter MTY is incorrectly set: | Check whether the parameter is set to a value for 3000 rpm rather than 2000 rpm. | Correctly set the parameter. For details, see 7, "Details of Servo Parameters." |
| 2 | If the servo parameter RNG is incorrectly set: | Check that the detector used for the position detector is correctly set: | Correctly set the parameter. For details, see 7, "Details of Servo Parameters." |
| 3 | If the servo parameter PIT is incorrectly set: | Check whether the lead of the ball screw is set in the unit of mm or degrees. In a special gear ratio, the parameter value does not always accord with the real speed. | Correctly set the parameter. |
| 4 | If the rapid traverse rate is too high: | Check whether or not $\text{Speed (rpm)} = \frac{\text{rapid traverse rate (mm/min)}}{\text{ball screw lead (mm)}}$ exceeds the motor specification value. | Decrease the rapid traverse rate. |
| 5 | If the acceleration/deceleration time constant is too small and an overshoot occurs: | Increase the acceleration/deceleration time constant. | Consider the acceleration/deceleration time constant. |
| 6 | If the servo system is unstable and an overshoot occurs: | Increase the high speed loop gain VG1 or decrease the position loop gain PGN.<br>Note: In changing the position loop gain, it is necessary to change OD1 and OD2 so that they are reversely proportional to PGN. | Set the gain once again. |
| 7 | If the cable between the position detector and the servo amplifier is defective: | Check for erratic motion in the motor, even in a low speed feed operation. | Repair the cable. |
| 8 | If the position detector is defective: | (1) Test the position detector with a normal one.<br>(2) When the position detector and the speed detector are independently provided, operate the servo motor by substituting the speed detector for the position detector. | Replace the detector with a new one. |
| 9 | If the minimum movement unit has been set to 0.1μ system instead of 1μ system: | Check the system specification. | Correctly set the parameter. |

(18) Alarm No. 32 *: Over current

| | Cause | Verification method | Remedy |
|---|---|---|---|
| 1 | If the phases U, V and W of the servo amplifier outputs short-circuit each other: | Remove the cables of the phases U, V, and W from the terminal block, disconnect the Cannon connector of the motor, and use the circuit tester to check whether the phases short-circuit each other. | Arrange the cables so that they will not short-circuit. |
| 2 | If the phases U, V, and W of the servo amplifier outputs are grounded: | Check the resistance between each of the phases U, V, and W of the terminal block and the case using the circuit tester. | Arrange the cables so that they are not grounded. |
| 3 | If the speed detection cable is defective: | Test the cable with a normal cable. | Replace the cable with a new one. |
| 4 | If the mounting direction of the speed detector is not in accordance with the parameter value being set: | The following table shows the relationship between the mounting direction of the motor/detector and the parameters.<br>Bit F: 0 = AC, 1 = BD<br> 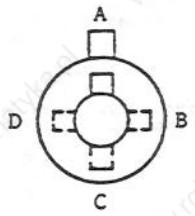 | Correctly position the speed detector or change the parameter. For details, see 7, "Details of Servo Parameters, #17. STY." |
| 5 | If the speed detector is defective: | Test the detector with a normal one. | Replace the detector with a new one. |
| 6 | If the main card is defective: | | Replace the RF01 card with a new one. |
| 7 | Defective main card. | Try to exchange with a normal main card. | Replace the main card. |

Note) Where there is an overcurrent error, do not turn on the servo before the cause is clarified.

If the over current alarm occurs, the transistor module may be defective.
Before restoring the operation of the motor, check that the transistor module is normal using the following procedure:

## Transistor module verification procedure

| No. | Description |
|---|---|
| 1 | Turn off the 3Ø, 200/220 VAC power input. |
| 2 | Dismount the main card and remove all the screws which fasten the power card and the related parts. Dismount the power card from the frame. |
| 3 | Measure the resistance between each two pins of the transistor module using the circuit tester. |

| Pin to be measured by circuit tester | | Normal resistance | Abnormal resistance | Pin to be measured by circuit tester | | Normal resistance | Abnormal resistance |
|---|---|---|---|---|---|---|---|
| + | - | | | + | - | | |
| P | B1 | Several hundred ohms | Short-circuit or infinity | N | B2 | Several hundred ohms | Short-circuit or infinity |
| | B3 | | | | B4 | | |
| | B5 | | | | B6 | | |
| | U | Several hundred ohms | Short-circuit or infinity | | U | Infinity | Short-circuit or several hundred ohms |
| | V | | | | V | | |
| | W | | | | W | | |
| B1 | P | Infinity | Short-circuit or several hundred ohms | B2 | N | Infinity | Short-circuit or several hundred ohms |
| B3 | | | | B4 | | | |
| B5 | | | | B6 | | | |
| U | | Infinity | Short-circuit or several hundred ohms | U | | Several hundred ohms | Short-circuit or infinity |
| V | | | | V | | | |
| W | | | | W | | | |
| B1 | U | Infinity | Short-circuit or several hundred ohms | B2 | U | Infinity | Short-circuit or several hundred ohms |
| B3 | V | | | B4 | V | | |
| B5 | W | | | B6 | W | | |
| U | B1 | Several hundred ohms | Short-circuit or infinity | U | B2 | Several hundred ohms | Short-circuit or infinity |
| V | B3 | | | V | B4 | | |
| W | B5 | | | W | B6 | | |

(Circuit tester: x 10 ohm range)

Measure the same terminal for each of the phases U, V, and W and check that all values are equal.
If an abnormality is found in any portion, replace the transistor module with a new one. (Replace the amplifier with a new one.)

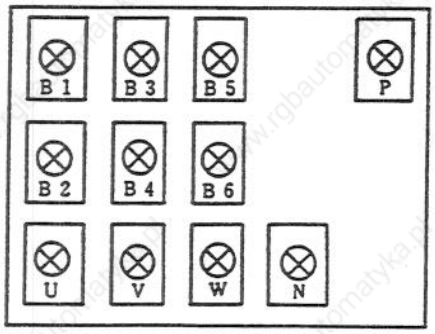


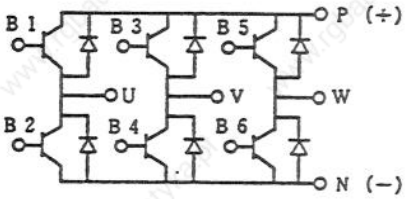


| | |
|---|---|
| 4 | Restore the transistor module in the order of steps 2 and 1 above. |

(19) Alarm No. 33 : Over voltage

The DC bus voltage in the unit exceeds the allowable value (around 400 V).

| | Cause | Verification method | Remedy |
|---|---|---|---|
| 1 | The cables are incorrectly connected to the terminal block. | Connection when the regeneration option resistor is not used:<br> 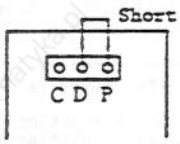 <br><br>Connection when the regeneration option resistor is used:<br> 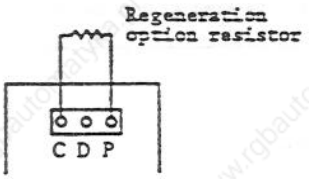 <br> | Correctly connect the cables. |
| 2 | If the acceleration/deceleration frequency is excessive and the acceleration/deceleration time constant is too small: | (1) Increase the acceleration/deceleration time constant.<br>(2) Decrease the acceleration/deceleration frequency.<br>(3) Decrease the rapid traverse rate. | (1) Increase the acceleration/deceleration time constant.<br>(2) Decrease the acceleration/deceleration frequency.<br>(3) Decrease the rapid traverse rate. |
| 3 | When the vertical axis is unbalanced, the acceleration/deceleration time constant is small. | (1) Increase the acceleration/deceleration time constant.<br>(2) Decrease the acceleration/deceleration frequency.<br>(3) Decrease the rapid traverse rate. | (1) Increase the acceleration/deceleration time constant.<br>(2) Decrease the acceleration/deceleration frequency.<br>(3) Decrease the rapid traverse rate. |
| 4 | If the regeneration resistor is broken: | Measure the resistance between terminals C and P of the terminal box using the circuit tester.<br>P(+), C(-): Approx. 13 ohms<br>Measure the resistance 3 minutes after the charge lamp goes out. | |
| 5 | If the regeneration power transistor is broken: | Measure the resistance in the same manner as (12)-4. | |

(20) Alarm No. 34 : Data parity

If a parity error occurs in data which is received from NC:

| | Cause | Verification method | Remedy |
|---|---|---|---|
| 1 | The connectors CN1A and CN1B of the main card are not perfectly connected. | Check that they are perfectly connected. | Correctly connect the connectors and tighten them with screws. |
| 2 | If the cable between NC and the servo amplifier is defective: | Test the cable with a normal one. | Replace the cable with a new one. |
| 3 | If noise enters the cable between NC and the servo amplifier: | (1) Take precautions against noise. See 3.5, "Precautions for Installing Amplifier." (2) Check whether the noise occurs when a specific relay contractor in the power control box is turned on and off. | (1) Take precautions against noise. (2) Mount a spark killer, etc. |
| 4 | If a card on the NC side is defective (MC611, etc.) | Test the card with a normal one. | Replace the card with a new one. |

(21) Alarm No. 35 *: Data error

The amount of movement by the movement command from NC is excessive.

| | Cause | Verification method | Remedy |
|---|---|---|---|
| 1 | The connectors CN1A and CN1B of the main card are not perfectly connected. | Check that they are perfectly connected. | Correctly connect the connectors and tighten them with screws. |
| 2 | If the cable between NC and the servo amplifier is defective: | Test the cable with a normal one. | Replace the cable with a new one. |
| 3 | If noise enters the cable between NC and the servo amplifier: | (1) Take precautions against noise. See 3.5, "Precautions for Installing Amplifier." (2) Check whether the noise occurs when a specific relay contractor in the power control box is turned on and off. | (1) Take precautions against noise. (2) Mount a spark killer, etc. |
| 4 | If a card on the NC side is defective (MC611, etc.) | Test the card with a normal one. | Replace the card with a new one. |

(22) Alarm No. 36 : Transfer error

A periodical data transfer from NC is stopped.

| | Cause | Verification method | Remedy |
|---|---|---|---|
| 1 | The connectors CN1A and CN1B of the main card are not perfectly connected. | Check that they are perfectly connected. | Correctly connect the connectors and tighten them with screws. |
| 2 | If the cable between NC and the servo amplifier is defective: | Test the cable with a normal one. | Replace the cable with a new one. |
| 3 | If noise enters the cable between NC and the servo amplifier: | (1) Take precautions against noise. See 3.5, "Precautions for Installing Amplifier." (2) Check whether the noise occurs when a specific relay contractor in the power control box is turned on and off. | (1) Take precautions against noise. (2) Mount a spark killer, etc. |
| 4 | If a card on the NC side is defective (MC611, etc.) | Test the card with a normal one. | Replace the card with a new one. |

(23) Alarm No. 37 *: Parameter error

A servo parameter transferred from NC during initialization is abnormal.

| | Cause | Verification method | Remedy |
|---|---|---|---|
| 1 | The data range is incorrect. | Check the upper and lower limit values of the setting values. NC indicates the incorrect parameter number. See 7, "Details of Servo Parameters." | Set the parameter once again and turn the power off and on. |
| 2 | If the servo parameter STY does not accord with the hardware setting: | The following table shows the relationship between STY and the hardware setting.<br>Card configuration / Parameter STY<br>RG101 / ××0<br>RG101 + RF31 / ××4<br>RG101 + RF31 / ××5, ××4, ××1<br>NC indicates "17" as the incorrect parameter number. | Set the parameter once again and turn the power off and on. |
| 3 | The combination of the servo parameter RNG, PIT, PC1, and PC2, and PGN is incorrect. | Check the upper and lower limit values of the setting values. NC indicates "34" as the incorrect parameter number. See (Note 1) of 7, "Details of Servo Parameters." | Set the parameter once again and turn the power off and on. |
| 4 | The unit conversion constant transferred from NC is set to 0. | NC indicates "33" as the incorrect parameter number. | The parameter is incorrectly set on the NC side. |

| | Cause | Verification method | Remedy |
|---|---|---|---|
| 5 | The connectors CN1A and CN1B of the main card are not perfectly connected. | Check that they are perfectly connected. | Perfectly connect the connectors and tighten them with screws. |
| 6 | If the cable between NC and the servo amplifier is defective: | Test the cable with a normal one. | Replace the cable with a new one. |
| 7 | Noise enters the cable between NC and the servo amplifier: | (1) Take proper precautions against noise. See 3.5, "Precautions for Installing Amplifier." (2) Check whether the noise occurs when a specific relay contractor in the power control box is turned on and off. | (1) Take proper precautions against noise. (2) Mount a spark killer, etc. |
| 8 | If a card on the NC side is defective (MC611, etc.): | Test the card with a normal one. | Replace the card with a new one. |

(24) Alarm No. 42 *: Feedback error 1

If the feedback value of the motor shaft end detector is incorrect:

| | Cause | Verification method | Remedy |
|---|---|---|---|
| 1 | The cable between the amplifier and the detector is defective. | Test the cable with a normal one from another axis. | Replace the cable with a new one. |
| 2 | If the motor shaft end detector is defective: | Test the motor shaft end detector with a normal one from another axis. | Replace the motor shaft end detector with a new one. |
| 3 | If the main card (or add-on card) is defective: | Test the main card (or add-on card) with a normal one from another axis. Change the axis selection switch position of the main card. For details, see 5.1, "Replacing Servo Amplifier Control Card." | Replace the main card (or add-on card) with a new one. |

(25) Alarm No. 43 *: Feed back error 2

The feed back value in the fully closed loop is invalid.

| | Cause | Verification method | Remedy |
|---|---|---|---|
| 1 | If the cable between the amplifier and the detector on the machine shaft end is defective: | Test the cable with a normal one from another axis. | Replace the cable with a new one. |
| 2 | If the motor shaft end detector is defective: | Test the motor shaft end detector with a normal one from another axis. | Replace the cable with a new one. |
| 3 | If the machine shaft end detector is defective: | Test the machine shaft end detector with a normal one from another axis. | Replace the machine shaft end detector with a new one. |
| 4 | If the motor shaft end detector is defective: | Test the motor shaft end detector with a normal one from another axis. | Replace the motor shaft end detector with a new one. |
| 5 | If the add-on card is defective. | Test the add-on card with a normal one from another axis. | Replace the add-on card with a new one. |
| 6 | If the main card is defective: | Test the main card with a normal one from another axis. Change the axis selection switch position of the main card. For details, see 5.1, "Replacing Servo Amplifier Control Card." | Replace the main card with a new one. |

(26) Alarm No. 45 : Fin over heat

The fin thermal protector in the unit is activated.

| | Cause | Verification method | Remedy |
|---|---|---|---|
| 1 | If the motor current exceeds the continuous output current limit value of the amplifier: | Decrease the load amount.<br>Decrease the acceleration/deceleration frequency.<br>Decrease the rapid traverse rate.<br>Decrease the ratio of the heavy cutting time period. | Same as left hand column. |
| 2 | If the regeneration resistor and the regeneration power transistor are overloaded: | Decrease the acceleration/deceleration frequency.<br>Decrease the rapid traverse rate. | Same as left hand column. |
| 3 | If the thermal protector is defective: | Check whether or not the thermal protector is activated in the non-load state. | Replace the unit with a new one. |

(27) Alarm No. 46 *: Motor over heat

The thermal protector in the motor is activated.

| | Cause | Verification method | Remedy |
|---|---|---|---|
| 1 | If the motor operation exceeds the continuous rating: | Check whether or not the motor is hot.<br>Decrease the load amount.<br>Decrease the acceleration/deceleration frequency.<br>Decrease the ratio of the heavy cutting time. | The load amount is decreased: |
| 2 | The cables are incorrectly connected to the terminal block. | Check whether or not the motor is cool:<br>• The cables are incorrectly connected to the terminal blocks G1 and G2.<br>• The cables are incorrectly connected to the Cannon connectors G1 and G2 of the motor.<br>Check the continuity of G1 and G2 using the circuit tester. | Correctly connect the cables. |
| 3 | If the thermal protector is defective: | Check G1 and G2 of the motor using the circuit tester. | Replace the motor with a new one. |
| 4 | If the regeneration option unit MR-RB30 is overheated (only on the axis where the regeneration option unit is mounted). | Check whether or not the regeneration option unit is hot. It is possible to consider cause 2 or 3 of the alarm No.3 "Over-regeneration".<br>For details, see "Over regeneration." | See "Over-regeneration." |
| 5 | If the thermal protector of the regeneration option unit MR-RB30 is defective (only on the axis where the regeneration option unit is mounted): | Check G3 and G4 of the regeneration option unit using the circuit tester. | Replace the regeneration option unit with a new one. |

Note) G1, G2 terminal application

| | |
|---|---|
| MR-S11 | G1, G2 |
| MR-S12 | LG1, LG2, MG1, MG2 |

(28) Alarm No. 50 *: Overload 1

The motor is operated in the hatched area of the following thermal characteristic:
The motor rating current and the time represented by ○, □, ×, and △ in the figure depend on the motor type. Refer to the following table.

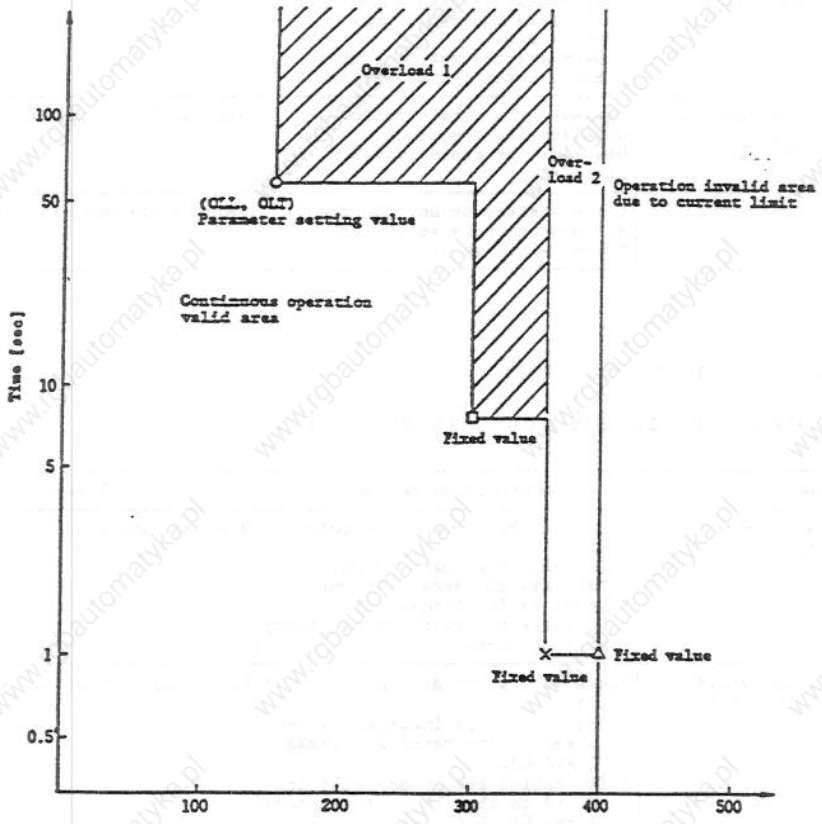


| Motor | ○ | | □ | | × | | △ | |
|---|---|---|---|---|---|---|---|---|
| | Level | Time | Level | Time | Level | Time | Level | |
| HA053/13 | OLL | OLT/10 sec. | 250% | 10 | 320% | 1 | 355% | |
| 23/33 | OLL | OLT/10 | 250 | 10 | 355 | 1 | 375 | |
| 40 | OLL | OLT/10 | 250 | 10 | 500 | 1 | 555 | |
| 43 | OLL | OLT/10 | 250 | 10 | 360 | 1 | 400 | |
| 80 | OLL | OLT/10 | 250 | 10 | 410 | 1 | 455 | |
| 83 | OLL | OLT/10 | 250 | 10 | 305 | 1 | 340 | |
| 100 | OLL | OLT/10 | 250 | 10 | 290 | 1 | 320 | |
| 103 | OLL | OLT/10 | 220 | 5 | 305 | 1 | 340 | |
| 200 | OLL | OLT/10 | 200 | 5 | 270 | 1 | 300 | |
| 203 | OLL | OLT/10 | 190 | 5 | 265 | 1 | 295 | |
| 300/700 | OLL | OLT/10 | 180 | 5 | 245 | 1 | 270 | |
| 900 | OLL | OLT/10 | 180 | 5 | 270 | 1 | 300 | |

Note 1: Parameter standard setting value: OLL = 150% OLT/10 = 60 sec.
Note 2: In the case of (ILP = 1364, ILN = -1364), when the parameter values are changed, the level of △ is correspondingly changed.

| | Cause | Verification method | Remedy |
|---|---|---|---|
| 1 | If the motor operation exceeds the continuous rating value: | Check whether or not the motor is hot:<br>Decrease the load amount.<br>Decrease the acceleration/deceleration frequency.<br>Decrease the rapid traverse rate.<br>Decrease the ratio of the heavy cutting time, etc. | The load amount is decreased. |
| 2 | The motor collides with a machine. | Check whether or not the motor collides with the machine. | Separate the motor from the machine.<br>Check that the soft limit operates correctly. |
| 3 | If the servo parameters OLL and OLT are incorrectly set: | Check that the parameters are set to the following standard values.<br>OLL: 150, OLT: 600 | Correctly set the parameters. |
| 4 | If a hunting occurs by the reverse servo operation: | 1. The motor power cable connections are incorrect.<br>2. The servo parameter STY is incorrectly set.<br>3. The servo parameter MTY is incorrectly set. | Correct the cable connections and the parameters.<br>For details, see 7, "Details of Servo Parameters." |
| 5 | The detection system is defective. | 1. If the detector is defective. Replace the detector with a normal one.<br>2. If the detector cable is defective: Replace the cable with a normal cable. | Correct the cable connections and the parameters.<br>For details, see 7, "Details of Servo Parameters." |
| 6 | If a hunting occurs due to unstable servo system: | 1. The servo parameter PGN is incorrectly set.<br>2. The servo parameter PC1 is incorrectly set.<br>3. The servo parameter PC2 is incorrectly set.<br>4. The servo parameter RNG is incorrectly set.<br>5. The servo parameter VG1 is incorrectly set. | Correct the cable connections and the parameters.<br>For details, see 7, "Details of Servo Parameters." |

(29) Alarm No. 51 *: Overload 2

The motor is operated in the hatched area of the following thermal characteristic:
The motor rating current and the time represented by ○, □, ×, and △ in the figure depend on the motor type. Refer to the following table.

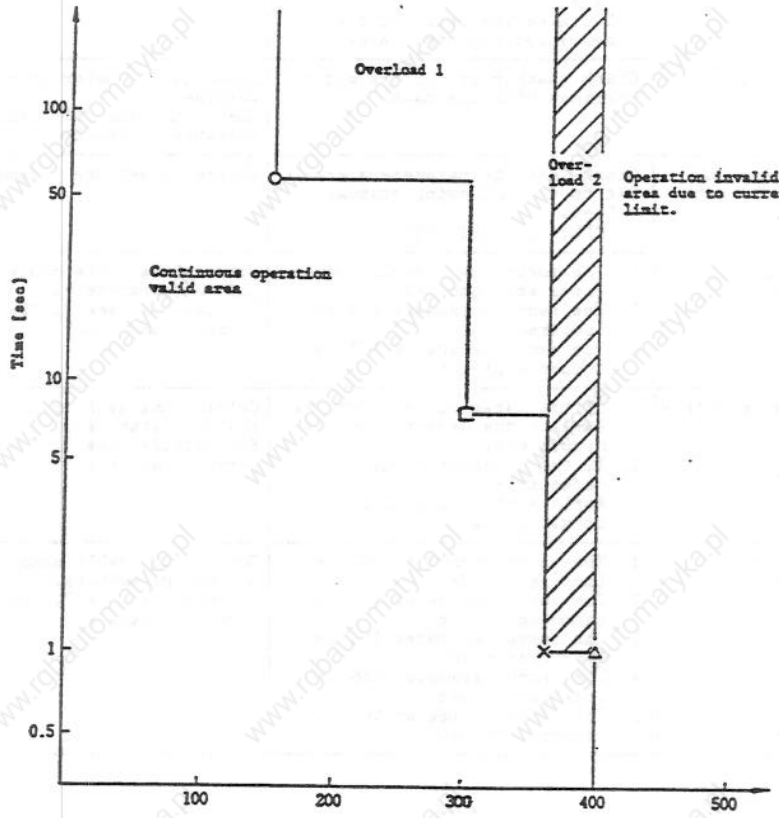


| Motor | ○ | | □ | | × | | △ | |
|---|---|---|---|---|---|---|---|---|
| | Level | Time | Level | Time | Level | Time | Level | |
| HA053/13 | OLL | OLT/10 sec. | 250% | 10 | 320% | 1 | 355% | |
| 23/33 | OLL | OLT/10 | 250 | 10 | 355 | 1 | 375 | |
| 40 | OLL | OLT/10 | 250 | 10 | 500 | 1 | 555 | |
| 43 | OLL | OLT/10 | 250 | 10 | 360 | 1 | 400 | |
| 80 | OLL | OLT/10 | 250 | 10 | 410 | 1 | 455 | |
| 83 | OLL | OLT/10 | 250 | 10 | 305 | 1 | 340 | |
| 100 | OLL | OLT/10 | 250 | 10 | 290 | 1 | 320 | |
| 103 | OLL | OLT/10 | 220 | 5 | 305 | 1 | 340 | |
| 200 | OLL | OLT/10 | 200 | 5 | 270 | 1 | 300 | |
| 203 | OLL | OLT/10 | 190 | 5 | 265 | 1 | 295 | |
| 300/700 | OLL | OLT/10 | 180 | 5 | 245 | 1 | 270 | |
| 900 | OLL | OLT/10 | 180 | 5 | 270 | 1 | 300 | |

Note 1: Parameter standard setting value: OLL = 150% OLT/10 = 60 sec.
Note 2: In the case of (ILP = 1364, ILN = -1364), when the parameter values are changed, the level of △ is correspondingly changed.

| | Cause | Verification method | Remedy |
|---|---|---|---|
| 1 | The motor collides with a machine. | Check whether or not the motor collides with the machine. | Separate the motor from the machine. |
| 2 | If the acceleration/deceleration time constant is too short: | Observe the current on the servo monitor screen and check whether or not the current exceeds the level marked with × on the preceding table for 1 sec or more. | Increase the acceleration/deceleration time constant. |
| 3 | If a hunting occurs by the reverse servo operation: | 1. The motor power cable connections are incorrect.<br>2. The servo parameter STY is incorrectly set.<br>3. The servo parameter MTY is incorrectly set. | Correct the cable connections and the parameters. For details, see 7, "Details of Servo Parameters." |
| 4 | The detection system is defective. | 1. If the detector is defective: Replace the detector with a normal one.<br>2. If the detector cable is defective: Replace the cable with a normal cable. | Correct the cable connections and the parameters. |
| 5 | If a hunting occurs due to unstable servo system: | 1. The servo parameter PGN is incorrectly set.<br>2. The servo parameter PC1 is incorrectly set.<br>3. The servo parameter PC2 is incorrectly set.<br>4. The servo parameter RNG is incorrectly set.<br>5. The servo parameter VG1 is incorrectly set. | Correct the cable connections and the parameters. For details, see 7, "Details of Servo Parameters." |
| 6 | If the DC bus voltage in the unit drops: | Check whether or not in the ready ON state, the neon lamp on the left side of the unit terminal block light up (the 7-segment display indicates [d1] or [d1]). | Replace the unit with a new one. |

(30) Alarm No. 52 *: Over droop

The real machine position deviates from the ideal machine position according to the command position set by OD1.
The machine position is in the hatched area of the following figure.

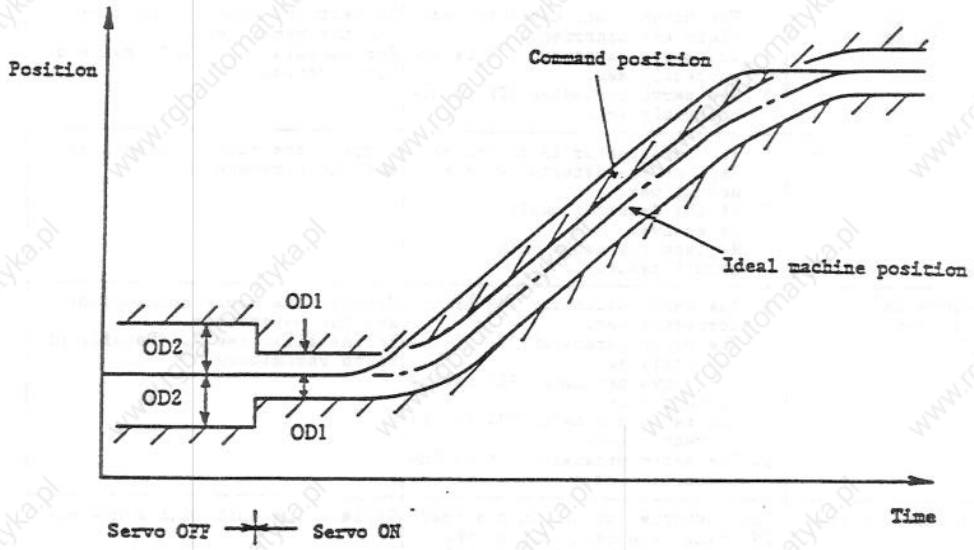

| | Cause | Verification method | Remedy |
|---|---|---|---|
| 1 | If the acceleration/deceleration time constant is too short: | Increase the acceleration/deceleration time constant. Obtain the minimum acceleration/deceleration time constant from the following equation.<br><br>$Ts\ min = \frac{2\pi N(Jm - J_L)}{60 \times (Tm - T_L)}$<br><br>where<br><br>N : Rapid traverse rate [rpm]<br>Jm: Motor inertia[kg·cm·S²]<br>$J_L$: Load inertia [kg·cm·S²]<br>Tm: Maximum motor torque [kg·cm]<br>$T_L$: Maximum load torque of rapid traverse [kg·cm]<br>Ts min: Minimum acceleration/deceleration time constant [S]<br>For details of the motor constant, see Appendix 7. | Increase the acceleration/deceleration time constant or decrease the rapid traverse rate. |
| 2 | If the current is excessively limited: | Check the servo parameters ILP and ILN. | Correct the servo parameters. |
| 3 | The motor collides with a machine. | Check whether the motor collides with the machine. | Separate the motor from the machine. |
| 4 | If a hunting occurs by the reverse servo operation: | 1. The motor power cable connections are incorrect.<br>2. The servo parameter STY is incorrectly set.<br>3. The servo parameter MTY is incorrectly set. | Correct the cable connections and the parameters. For details, see 7, "Details of Servo Parameters." |
| 5 | The detection system is defective. | 1. If the detector is defective: Replace the detector with a normal one.<br>2. If the detector cable is defective: Replace the cable with a normal cable. | Correct the cable connections and the parameters. |
| 6 | If a hunting occurs due to unstable servo system: | 1. The servo parameter PGN is incorrectly set.<br>2. The servo parameter PC1 is incorrectly set.<br>3. The servo parameter PC2 is incorrectly set.<br>4. The servo parameter RNG is incorrectly set.<br>5. The servo parameter VG1 is incorrectly set. | Correct the cable connections and the parameters. For details, see 7, "Details of Servo Parameters." |
| 7 | If the DC bus voltage in the unit drops: | Check whether or not in the ready ON state, the neon lamp on the left side of the unit terminal block lights up (the 7-segment display indicates [:] or [d] ). | Replace the unit with a new one. |
| 8 | If the gain of the servo system is correct: | 1. Continuously increase the level of the servo parameter VG1 in the unit of 20.<br>2. Continuously decrease the level of the servo parameter PGN in the unit of 5. | 1. After the left-hand adjustment, observe the situation.<br>2. After the left-hand adjustment, set the interpolation axis value to the same value. |

(31) Alarm No. 53 : Over-droop 2

Actual mechanical position has been displaced during servo off beyond the distance set by OD2 from the ideal mechanical position for the commanded position.

| | Cause | Verification method | Remedy |
|---|---|---|---|
| 1 | When the error offset during servo off was not arranged, the motor was operated beyond the value of parameter OD2. | Confirm the amount of mechanical movement during servo off. | |
| 2 | Inadequate insertion of CN1A, CN1B of main card into connectors. | Check the state of insertion. | Correct the insertion and insert into the groove. |
| 3 | Some trouble with the cable between NC and servo amplifier. | Try to replace the cable. | Replace the cable. |
| 4 | Noises exist on the cable between NC and servo amplifier. | (1) Arrange the noise prevention.<br>→ Refer to cautions for installation of the amplifier.<br>(2) It is raised with the timing of On/Off of specific relay contactor in the power control box. | (1) Arrange the noise prevention.<br>(2) Add the spark killer, etc. |
| 5 | Defective card at NC side (MC611, etc.) | Try to replace with a normal card. | Replace the card. |

(32) Alarm No. 54 : Amp. overload (Exists only on MS-S12.)

It was operated beyond a definite time when the total value of current of the motor which is connected with the motor, beyond the following level. The following table shows the current level and time.

| | Current level (A) | Time (min) |
|---|---|---|
| MR-S12-33A | 21 | 12 |
| MR-S12-40A | | |
| MR-S12-80B | | |
| MR-S12-80A | | |
| MR-S12-100B | 32 | |
| MR-S12-100A | | |

| | Cause | Verification method | Remedy |
|---|---|---|---|
| 1 | The amplifier was operated beyond its rating of continued operation. | Try to reduce the load<br>• Reduce the frequency of acceleration and deceleration.<br>• Slow down the rapid traverse rate.<br>• Reduce the rate of heavy cutting time. | Reduce the load. |
| 2 | Setting error of servo parameter MTY | Is servo parameter MTY identical to the motor's requirement? | Adjust accordingly. |
| 3 | Hunting by a reverse servo | 1. The wrong power cable is connected to the motor.<br>2. Setting error of servo parameter STY<br>3. Setting error of servo parameter MTY | Correct accordingly.<br>See 7. Details of parameter. |
| 4 | Hunting by unstable servo line | 1. Setting error of servo parameter PGN.<br>2. Setting error of servo parameter PC1.<br>3. Setting error of servo parameter PC2.<br>4. Setting error of servo parameter PNG.<br>5. Setting error of servo parameter VG1. | Correct accordingly.<br>See 7. Detail of parameter. |

(33) Alarm No. 55 : Emergency

The terminals B and R of the terminal block, which were short-circuited, are open. (These terminals may be linked to the emergency stop depending on the machine model.)
In the standard specification, the terminals are short-circuited in the terminal block.

| | Cause | Verification method | Remedy |
|---|---|---|---|
| 1 | If the emergency stop occurs: | When the emergency stop occurs, the terminals B and R are open. | Normal operation |
| 2 | The 200/220 VAC input voltage drops (in the phases R and S). | Check the input voltage using the volt meter. | Consider the power supply facility. |
| 3 | If the unit is struck by something: | When a force exceeding 5 G strikes the unit (for example the bottom of the unit is struck by a wooden hammer, etc.). | Remove the cause. |
| 4 | If a contactor in the unit is broken: | Check the continuity between each two contacts of the contactor (see the main circuit structural drawing). | Replace the unit with a new one. |

(34) Alarm No. 56 : Other axis alarm

An alarm occurs in the unit connected to CN1B, or the cable end (termination connector) is disconnected.

Example)

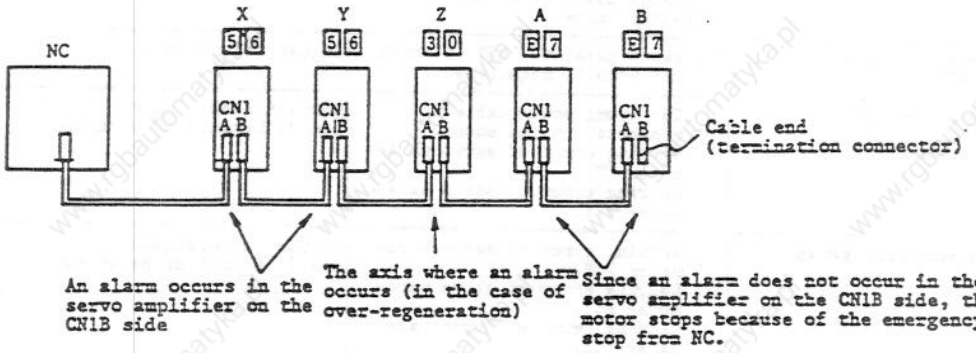


| | Cause | Verification method | Remedy |
|---|---|---|---|
| 1 | An alarm occurs in the servo amplifier on the CN1B side. | | Normal operation. |
| 2 | The cable end is disconnected. | | Correctly mount the cable end. |
| 3 | The power of the amplifier which is not used is not turned on. | In the above example, axis B is not used and the power input of the axis is disconnected. | In the left-hand example,<br>1. Turn on the power of axis B.<br>2. Connect the cable end to CN1B axis A. |

(35) Warning No. E0 : Warning over regeneration

The 80 % level of the regeneration alarm is detected. Because it is not an alarm, the servo OFF does not occur. However, if the motor is operated in this condition, the regeneration alarm may occur. For details, see (12) "Over-regeneration."
Note: It is recommended that the precautions described in item 2, (12), "Over regeneration" be taken. Check that the value of the regeneration load on the servo monitor screen gradually increases while E0 appears. When it does, see (12), "Over regeneration."

(36) Warning No. E1 : Warning overload

The 80 % level of the overload 1 alarm is detected. Because it is not an alarm, the servo OFF does not occur. However, if the motor is operated in this condition, the overload 1 alarm may occur. For details, see (22) "Overload 1".

(37) Warning No. E3 : Absolute position counter warning

Occurs when the value of the absolute position counter is invalid. Although an alarm does not occur even if the motor is operated in this condition, when the NC power is turned on, zero return operation is required. This warning may occur just after the motor is installed or before the zero return operation is performed. At that time, perform the zero return operation.
Check the absolute position detector, encoder, and add-on card (RF33/332) where cables are connected.

(38) Warning No. E4 *: Warning parameter error

A parameter value which is not allowed has been set.
(For the setting range, see 7, "Details of Servo Parameters."
Any invalid parameter is ignored and the value before the invalid value was set will kept.
When a normal value is set, this warning disappears.
The servo OFF state does not occur.

(39) Warning No. E5 *: Warning absolute detect error

There is an error in the internal data for absolute position detection. The servo OFF state does not occur.

| | Cause | Verification method | Remedy |
|---|---|---|---|
| 1 | If the grid interval of the machine parameter is incorrectly set: | Check that the grid interval of the parameter is set to "20". | Correct the parameter as described in the left-hand column. |
| 2 | If the resolver data of the point where the dog type zero return is performed is abnormal: | When the value of 1X on the servo monitor screen is in the following range, the data is abnormal.<br>278 < 1X < 4722<br>5070 < 1X<br>(See 8, "Absolute Position System.") | 1. Perform the dog type zero return operation once again.<br>2. When the data is in the left hand range even after taking the above countermeasure, replace the detector and the add-on card. |
| 3 | If the absolute value compensation data is abnormal: | | Replace the detector and the add-on card with new ones. |

For warnings relating to the absolute position system, see 8, "Absolute Position System."

(40) Warning No. E6 *: Warning over travel

When the speed loop step type is set for over-travel by the limit SW, a warning occurs while the speed loop is controlled in the over-travel state. The speed loop control time may be set by a parameter on the NC side.

| | Cause | Verification method | Remedy |
|---|---|---|---|
| 1 | Over-travel | Check whether or not the over-travel state takes place. | Normal operation |

(41) Warning No. E7 : NC emergency

NC is in the emergency stop state.

| | Cause | Verification method | Remedy |
|---|---|---|---|
| 1 | NC is in the emergency stop state. | | Normal operation |

(42) Warning No. A0 *: Warning absolute first transmission

When the NC power is turned on, the data received from the absolute position detector (OAER5KC) is abnormal. However, even if the motor is operated in this condition, the servo OFF state does not occur.

| | Cause | Verification method | Remedy |
|---|---|---|---|
| 1 | If the cable between the amplifier and the absolute position detector is defective: | Test the cable with a normal one from another axis. | Replace the cable with a new one. |
| 2 | If the add-on card (RF37 □) is defective: | Test the add-on card with a normal one from another axis. | Replace the add-on card with a new one. |
| 3 | If the absolute position detector is defective: | Test the detector with a normal one from another axis. | Replace the detector with a new one. |

(43) Warning No. A1 *: Warning absolute serial signal

In the normal operating state, the data received from the absolute position detector (OAER5KC) is abnormal. Even if the motor is operated in this condition, the servo OFF state does not occur.

| | Cause | Verification method | Remedy |
|---|---|---|---|
| 1 | If the cable between the amplifier and the absolute position detector is defective: | Test the cable with a normal one from another axis. | Replace the cable with a new one. |
| 2 | If the add-on card (RF37 □) is defective: | Test the add-on card with a normal one from another axis. | Replace the add-on card with a new one. |
| 3 | If the absolute position detector is defective: | Test the detector with a normal one from another axis. | Replace the detector with a new one. |

(44) Warning No. A2 : Warning absolute battery voltage

When the power is turned on, the voltage of the battery on the add-on card (RF37□) drops.

| | Cause | Verification method | Remedy |
|---|---|---|---|
| 1 | If the add-on card (RF37 □) is incorrectly set: | Visually check the add-on card, battery connection, and setting plug. (See 6.2) | Correctly set the setting plug. |
| 2 | If the battery voltage drops: | Check the voltage using the circuit tester. | Charge the battery for four hours or more. |
| 3 | If the battery is defective: | Charge the battery and check the voltage using the circuit tester. | Replace the battery with a new one. |
| 4 | If the cable is defective: | Test the cable with a normal one from another axis. | Replace the cable with a new one. |
| 5 | If the detector is defective: | Test the detector with a normal one from another axis. | Replace the detector with a new one. |
| 6 | If the add-on card (RF37 □) is defective: | Test the add-on card (RF37 □) with a normal one from another axis. | Replace the add-on card (RF37 □) with a new one. |

(45) Warning No. A3 *: Warning absolute cable No. connection

The power voltage applied to the absolute position detector (OAER5KC) drops. (Normally detected.)
Even if the motor is operated in this condition, the servo OFF state does not occur.

| | Cause | Verification method | Remedy |
|---|---|---|---|
| 1 | If the battery voltage drops: | Check the voltage using the circuit tester. | Charge the battery or replace it with a new one. |
| 2 | If the cable is broken: | Test the cable with a normal one from another axis or check the continuity. | Repair or replace the cable with a new one. |
| 3 | If the add-on card (RF37 □) is defective: | Test the add-on card (RF37 □) with a normal one from another axis. | Replace the add-on card (RF37 □) with a new one. |
| 4 | If the detector is defective: | Test the detector with a normal one from another axis. | Replace the detector with a good one (it is necessary to perform the initial set of the zero point return operation). |

(46) Warning No. A4 *: Warning absolute position error

The feedback pulse from the absolute position detector is abnormal. Even if the motor is operated in this condition, the servo OFF state does not occurs, however, the position deviates.

| | Cause | Verification method | Remedy |
|---|---|---|---|
| 1 | If a noise enters the cable between the amplifier and the detector: | Check whether or not the cable has been clamped. | Correctly clamp the cable. |
| 2 | | Check whether or not the power cable crosses the cable between the amplifier and the detector. | Separate the cables from each other. |
| 3 | If the detector is defective: | Test the detector with a normal one from another axis. | Replace the detector with a new one (it is necessary to perform the initial set of the zero point return operation). |

(47) Warning No. A5 *: Warning absolute resolver

The feedback signal from the absolute position detector is abnormal. Even if the motor is operated in this condition, the servo OFF state does not occur.

| | Cause | Verification method | Remedy |
|---|---|---|---|
| 1 | If a noise enters the cable between the amplifier and the detector: | Check whether or not the cable has been clamped. | Correctly clamp the cable. |
| 2 | | Check whether or not the power cable crosses the cable between the amplifier and the detector. | Separate the cables from each other. |
| 3 | If the detector is defective: | Test the detector with a normal one from another axis. | Replace the detector with a new one (it is necessary to perform the initial set of the zero point return operation). |

### 4.2.2 WHEN AN "AMPLIFIER NOT MOUNTED" ALARM OCCURS (NC SIDE ALARM):

The NC unit issues the "amplifier not mounted" alarm.

| | Cause | Verification method | Remedy |
|---|---|---|---|
| 1 | If the servo amplifier power is not turned on: | Check whether the 7-segment indicator of the servo amplifier lights up or not. | Turn on the power of the servo amplifier. |
| 2 | The power of the servo amplifier should be turned on after the power of NC is turned on. | Turn on the power of the servo amplifier after that of NC. | Perform the operation described in the left-hand column. |
| 3 | If the servo amplifier does not operate correctly. | Check whether or not the 7-segment indicator indicates [8]. | 1. Replace the EPROM with a new one.<br>2. Replace the main card with a new one. |
| 4 | If the cables between MCP and the amplifier, and between the amplifiers, are defective: | Test the cables with normal ones. | Replace the cables with new ones. |
| 5 | If the cable end (termination connector) is defective: | Test the cable end with a normal one. | Replace the cable end with a new one. |

### 4.2.3 WHEN THE MOTOR VIBRATES OR GENERATES A VIBRATION SOUND:

(1) When touching the machine, if you feel small vibration or when you hear a howling vibration sound:

| | Verification method and repair |
|---|---|
| 1 | Adjust the servo parameters. |

| | Servo parameter |
|---|---|
| ① | Decrement 5. VG1 by 50 (lower limit: 50) |
| ② | Decrement 11. IQC by 50 (lower limit: 128) |
| ③ | Decrement 12. IDG by 50 (lower limit: 256) |
| ④ | Turn on 17. STY FBC (bit B). |
| ⑤ | Turn on 17. STY FBF 1 to 3 (bit 8 to A) in the following order. |

| | FBF3(bitA) | FBF2(bit9) | FBF1(bit8) |
|---|---|---|---|
| 1 | 1 | 1 | 1 |
| 2 | 1 | 0 | 0 |
| 3 | 0 | 1 | 0 |
| 4 | 1 | 1 | 0 |
| 5 | 0 | 0 | 1 |
| 6 | 1 | 0 | 1 |
| 7 | 1 | 1 | 1 |

Note 5. VG1 is a parameter for response property of speed loop. When excessively decreasing the value of this parameter, the response property is degraded.

(2) When the motor vibrates or generates a vibration sound in the rapid traverse state:

| | Verification method and repair |
|---|---|
| 1 | Adjust the servo parameters. |

| | Servo parameter |
|---|---|
| ① | Take the same countermeasures as (1). |
| ② | Set a value which is the cutting feed speed + 100 rpm to SP2 and set the same value as VG1 to VG2. Repeat the rapid traverse operation by decrementing VG2 by 10 (limit value: 0). |

## 4.2.4 WHEN THE CUTTING SURFACE OR CIRCULARITY IS POOR:

| | Verification method and repair |
|---|---|
| 1 | When the taper or the surface accuracy in the direction of 45° of an arc is poor: |

| Servo parameter |
|---|
| Increment 5. VG1 by 20 (until a vibration or sound occurs in the stop state or in the rapid traverse state). |

| | |
|---|---|
| 2 | If there are noticeable projections at each quadrant change (noticeable joins): |

| Increment 5. VG1 by 20. |
|---|
| Turn on 17. STY SMC (bit E).<br>Increment 16. TGN by 20 from 0. When the value of 16. TGN is excessively large, arcs get dented. |

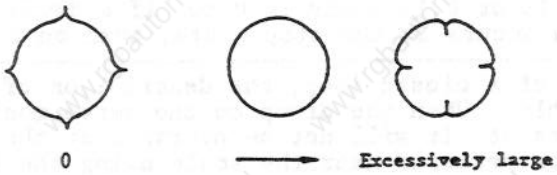

## 4.2.5 WHEN AN OVERSHOOT OCCURS DURING POSITIONING:

| | Verification method and repair |
|---|---|
| 1 | In case of semi-closed loop: |

| | Servo parameter |
|---|---|
| ① | Increment 5. VG1 by 50 (until a vibration or sound occurs in the stop state or in the rapid traverse state). |
| ② | Increment 8. VIA by 200 (upper limit: 2000). |

Note 1: When the overshoot amount is excessively large (5μ or more), check whether the droop on the servo monitor screen is overshot for the same amount, and when overshot for the same amount, take the above countermeasures.
When the situation cannot be improved in the above manner, increase the value of PGN for 20 or increase the acceleration/deceleration time constant in the axis specification.
When the droop is not overshot, the overshoot occurs in the mechanical system rather than the motor. At that time, check the mechanical system.

2 In case of a closed loop:

| | Servo parameter |
|---|---|
| ① | Increment 5. VG1 by 50 (until a vibration or sound occurs in the stop state or in the rapid traverse state). |
| ② | Increment 8. VIA by 200 (upper limit: 2000). |
| ③ | Decrement 3. PGN by 5 (Lower limit: approx. 20)<br>However, in the simultaneous interpolation axis, the same value should be used. |
| ④ | Turn on 27. SSF PID (bit 0).<br>Decrement 7. VIL by 5 from 10000 (lower limit: 9800). |
| ⑤ | Turn all of 27. SSF PID (bit 0), IDC (bit 1), and IDF (bit 2) and decrement VIL by 20 from 10000 (lower limit: 9500).<br>Note) Although the overshoot and limit cycle are removed in step of ④ above, if the response property is degraded, try ⑤. |
| ⑥ | When a 1μ or 0.1μ scale is used, if a deviation within 1μ or 0.1μ occurs in the stop state, turn on SSF CNG (bit 11). |

Note 2: In case of a closed loop, the description of Note 1 is also applicable. When the droop on the servo monitor screen is not overshot, it will not be overshot at the scale. It should be measured near the scale using the dial gauge, etc. When the droop is not overshot near the scale, check the mechanical system.

## 4.2.6 WHEN A SURGE FEED OCCURS IN ONE PULSE FEED OPERATION:

| | Verification method and repair |
|---|---|
| 1 | When several pulses are input, if the motor is not operating, check whether or not the same amount of the droop occurs on the servo monitor screen.<br><br>(1) When the droop occurs:<br><br>Servo parameter<br>① Increment 5. VG1 by 50<br>② Increment 8. VIA by 200 (until a vibration or sound occurs in the stop state or in the rapid traverse state).<br><br>Note) When SSF PID (bit 0) of the closed loop 27 is turned on.<br><br>Servo parameter<br>① Take countermeasures 4.2.3 ⑤.<br><br>(2) When the droop does not occur:<br>Since the motor or the ball screw end detector in the closed loop moves to the scale, the surge feed occurs somewhere else in the mechanical system. Check the mechanical system. |

## 4.2.7 EVEN IF THE POWER IS TURNED ON, THE 7-SEGMENT DISPLAY DOES NOT SHOW ANY DATA OR IT SHOWS [88] .

| | Cause | Verification method | Remedy |
|---|---|---|---|
| 1 | If the control power of the main card is shortcircuited in the detector or the detector cable: | Disconnect the detector cable from the main card (in the emergency stop state). | Replace the detector or detector cable with a new one. |
| 2 | If the control power of the main card is short-circuited on the add-on card: | Remove the add-on card (in the emergency stop state). | Replace the add-on card with a new one. |
| 3 | If the EPROM of the main card is not correctly mounted: | Visually check whether or not the EPROM is mounted in the location marked on it. Alternatively, check whether or not the pins of the EPROM are bent.<br><br> 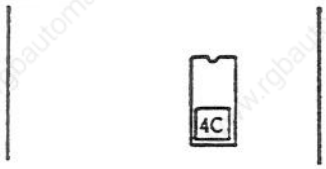 <br> | Correctly mount the EPROM. |

## 4.2.8 EVEN IF THE NC POWER IS TURNED ON, THE 7-SEGMENT DISPLAY DOES NOT CHANGE FROM [Ab], [AA] OR IT MOMENTARILY SHOWS [AC], [Ad], [AE], AND THEN RETURNS TO [Ab] [AC]:

| | Cause | Verification method | Remedy |
|---|---|---|---|
| 1 | If the cables between NC and the amplifier, and between the amplifiers, are disconnected: | Visually check the following cables.<br>• Cables connected to the main cards CN1A and CN1B.<br>• Cables connected to the NC side. | Correctly connect the cables. |
| 2 | If the axis number selection CS1 of the main card is incorrectly set: | Check whether or not the same axis number is used for two axes, or an incorrect axis number is used. | Correctly set the axis number selection CS1. |
| 3 | If the cables between NC and the amplifier and between the amplifiers are defective: | In the order of the cables connected between NC and each axis, when the 7-segment display momentarily indicates [AE], the cables that follow may be defective. Test the cables with normal ones.<br>The 7-segment display momentarily indicates [A][E].<br> 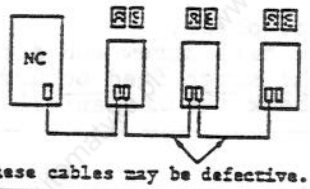 <br>These cables may be defective. | Replace the cables with new ones. |
| 4 | The main card is defective. | In the order of the cables connected between NC and each axis, when the 7-segment display momentarily indicates [AE], the cards that follow may be defective. Test the cards with normal ones.<br>The 7-segment display momentarily indicates [A][E].<br> 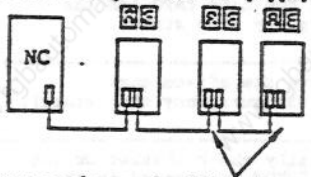 <br>These cards may be defective. | Replace the cards with new ones. |
| 5 | The software or hardware of NC may be defective. | (1) Check whether NC is normally started up.<br>(2) Test the card connected to the servo amplifier with a normal one. | Repair the NC side.<br>Replace the card on the NC side with a new one (MC611 card, etc.) |

# 5. UNIT REPLACEMENT METHODS

## 5.1 MOUNTING/DISMOUNTING CONTROL PRINTED CIRCUIT BOARD

### 5.1.1 DISMOUNTING CONTROL PRINTED CIRCUIT BOARD

| 1 | Dismounting add-on printed circuit board |
|---|---|
| | 1) Turn off the power and disconnect the connectors.<br>Note) When the absolute position detection card is mounted on the control printed circuit board, do not disconnect the connectors. If you do, the dog type zero point return operation is required.<br> 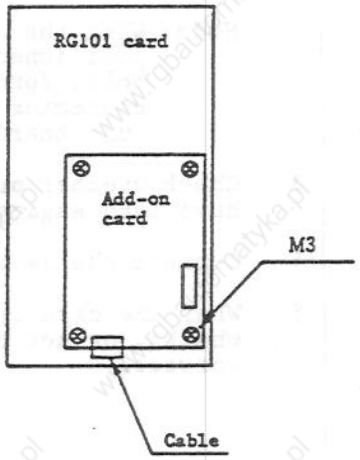 <br><br>2) Remove the four printed circuit board mounting screws.<br>3) Disconnect the associated connectors along with the printed circuit board. |
| 2 | Dismounting main card (RG101): |
| | 1) Turn off the power and disconnect the connectors.<br>2) While disengaging the printed circuit board supports, lift up the board.<br>3) Disengage the supports in the order of 1 to 3.<br> 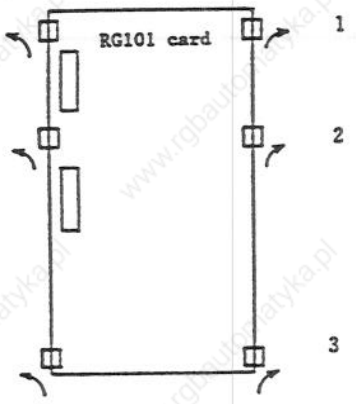 <br> |

## 5.1.2 MOUNTING CONTROL PRINTED CIRCUIT BOARD

| 1 | Mounting main card (RG101) |
|---|---|
| | 1) Connect the connectors CON1 and CON2 on the printed circuit board in accordance with the guide portions of the main circuit.<br>2) After the connectors are connected, check whether the mate connector is positioned at the verification hold.<br>Note: When the mate connector is not positioned at the verification hole, forcefully push the connector on the printed circuit board.<br>3) Check whether or not the six supports have been engaged in position.<br>4) Connect the associated connectors.<br>5) When the card is replaced, check whether or not the settings are correct. |

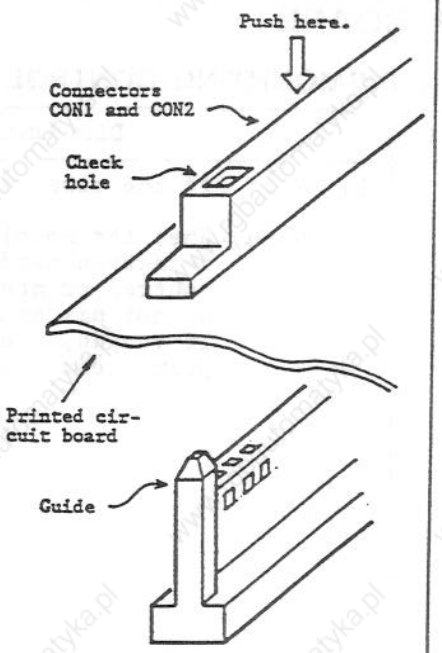


| 2 | Mounting add-on card |
|---|---|
| | 1) Mount the add-on card on the RG101 card so that the connectors on the add-on card accord with those on the RG101 card.<br>2) Loosen the four mounting screws.<br>3) Connect the associated connectors. |

## 5.2 DETECTOR MOUNTING METHOD

In the AC servo system, it is necessary to detect the positions of the magnetic polarities of the motor (magnet positions) unlike the DC servo system. The detector should be mounted in the following manner:

(1) Detector mounting surface

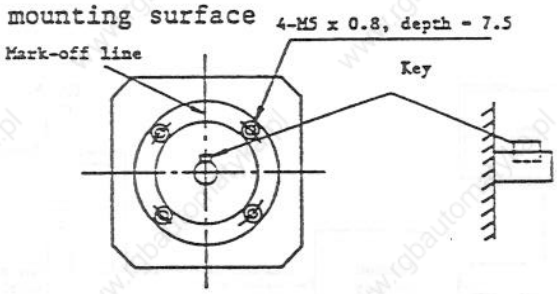


(2) Detector

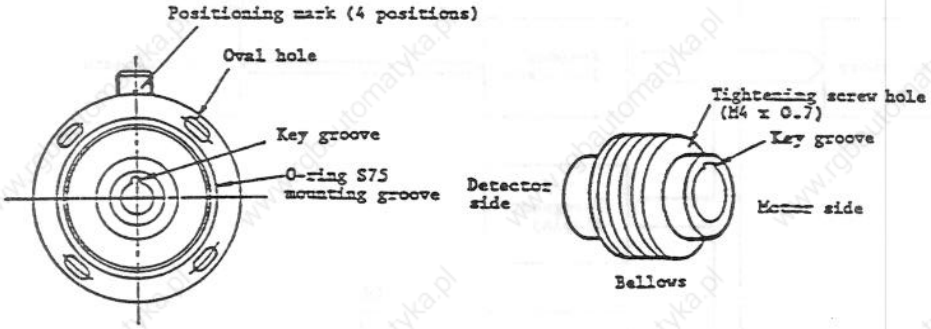


(3) Mounting (in the case that the detector mounting direction is A)

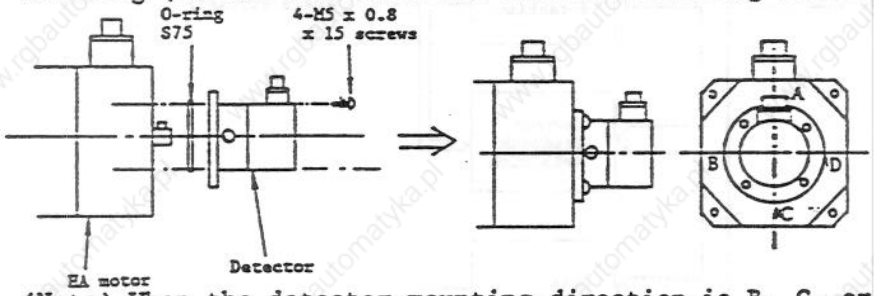


(Note) When the detector mounting direction is B, C, or D, the detector connector is placed in the position B, C, or D in the above figure, respectively.

(4) Mounting method
- (I) Mount the O-ring (S75) on the flange of the detector.
- (II) Mount the M4 hex socket screw on the coupling.
- (III) Engage the motor shaft key to the key groove of the bellows of the detector.
- (IV) Match the positioning mark of the detector with the mark-off line of the motor.
- (V) Mount the detector on the motor. (Use M5 x 0.8 screw.)
- (VI) Tighten the screw on the key groove so as to prevent the key from moving.
- (VII) Close the rubber plug of the detector.
- (Note) Because the relative positions of the detector and the bellows have been determined, do not dismount the bellows from the detector.

# 6. HARDWARE CHECK METHODS

## 6.1 FUNCTIONS OF CARDS

(1) RG101

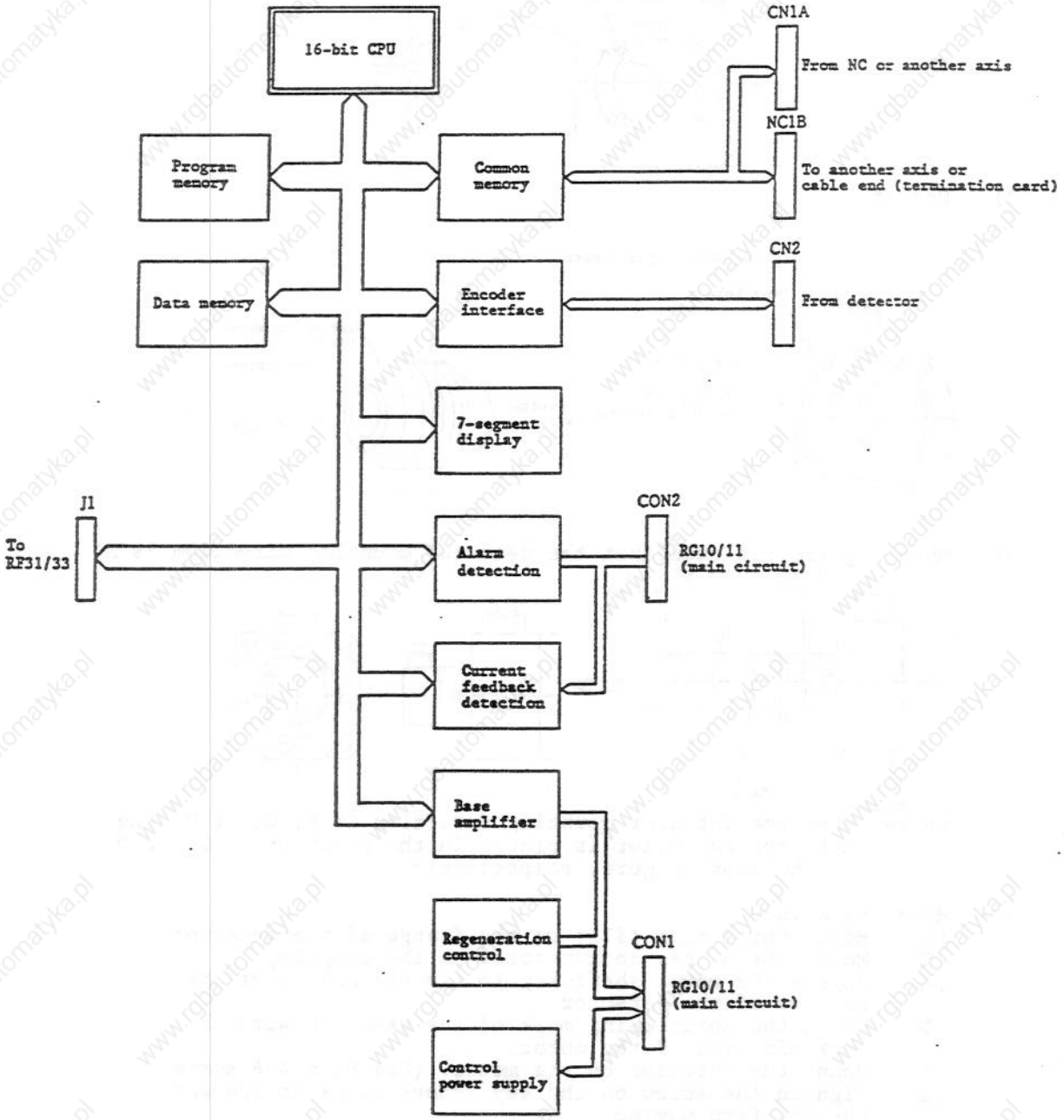

(2) RF31/33

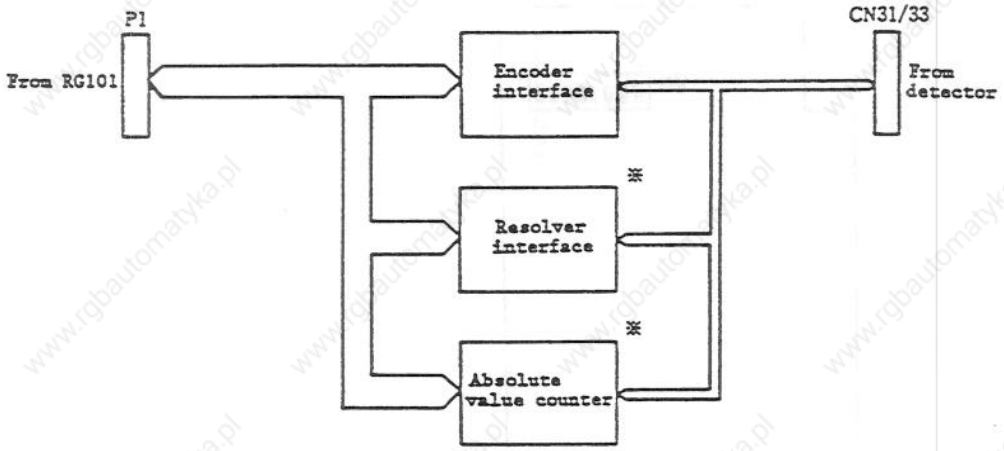


* The asterisked items are not provided for RF31.

## 6.2 HARDWARE SETTING AND CHECK PINS

RG101 setting method

| | Function | Setting | Example |
|---|---|---|---|
| CS1 | Axis number selection | 0 to 6: Select an axis number.<br>7 to F: Not used. | Axis 1 ... 0<br>Axis 2 ... 1<br>. .<br>. .<br>Axis 6 ... 5 |

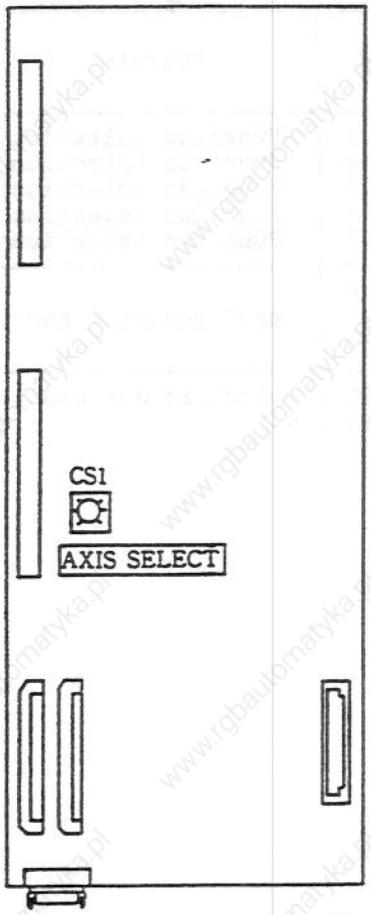

RF31 setting method

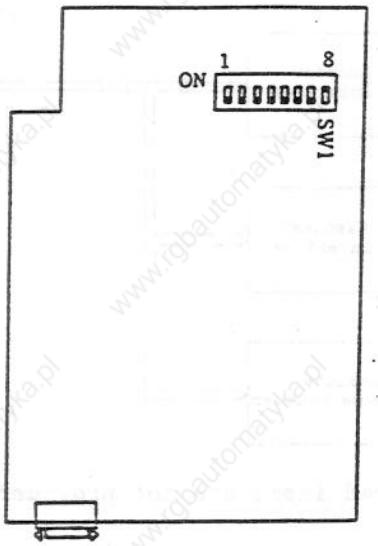


| Name | | Function | Setting | | Standard position | Remarks |
|---|---|---|---|---|---|---|
| | | | ON | OFF | | |
| SW1 | 1 | Function selection | | | OFF | Not used |
| | 2 | Function selection | | | OFF | Not used |
| | 3 | Function selection | | | OFF | Not used |
| | 4 | Function selection | | | OFF | Not used |
| | 5 | Function selection | | | OFF | Not used |
| | 6 | RF31 mounting check | Fixed | | OFF | |
| | 7 | | | | OFF | |
| | 8 | | | | ON | |

Even if a switch is not used, set it to the switch position as shown in the table.

RF33 setting method

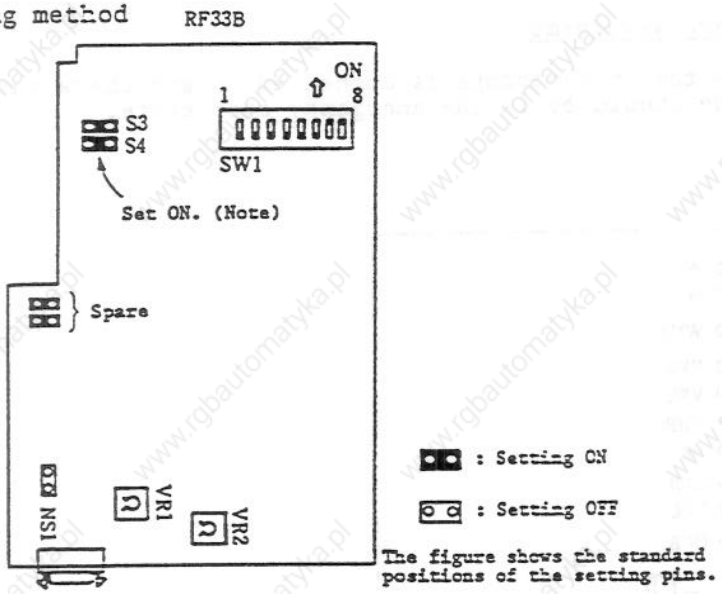


| Name | Function | Remarks |
|---|---|---|
| VR1 | Adjustment of amplitude variation | Adjusted at factory. |
| VR2 | Adjustment of amplitude variation | Adjusted at factory. |

| Name | | Function | Setting | | Standard position | | Remarks |
|---|---|---|---|---|---|---|---|
| | | | ON | OFF | 33A | 33B | |
| SW1 | 1 | Function selection | | | OFF | OFF | Not used |
| | 2 | Function selection | | | OFF | OFF | Not used |
| | 3 | Function selection | | | OFF | OFF | Not used |
| | 4 | Function selection | | | OFF | OFF | Not used |
| | 5 | Function selection | | | OFF | OFF | Not used |
| | 6 | | | | OFF | OFF | |
| | 7 | RF33 mounting check | Fixed | | ON | ON | |
| | 8 | | | | ON | ON | |
| A | | FB gain selection (1x) | Standard | Gain up | ON | - | |
| NS1 | | Resolver no-signal | Invalid | Valid | OFF | OFF | |
| S1 | | Function selection | | | OFF | - | Not used |
| S2 | | Function selection | | | OFF | - | Not used |
| S3 | | Battery connection | Connection | Not connected | OFF | OFF | When they are used, turn on these switch positions. |
| S4 | | Battery connection | Connection | Not connected | OFF | OFF | |

Even if a switch is not used, set it to the switch position as shown in the table.

(Note) S3 and S4 have been turned off at the factory.
Before the power is turned on, they should be turned on (when they are set, use the spare setting pins).
Unless S3 and S4 are set, the absolute position is not backed up.

Check pins and waveforms

Before the synchroscope is connected to any check pin, the machine should be in the emergency stop state.

(1) RG101

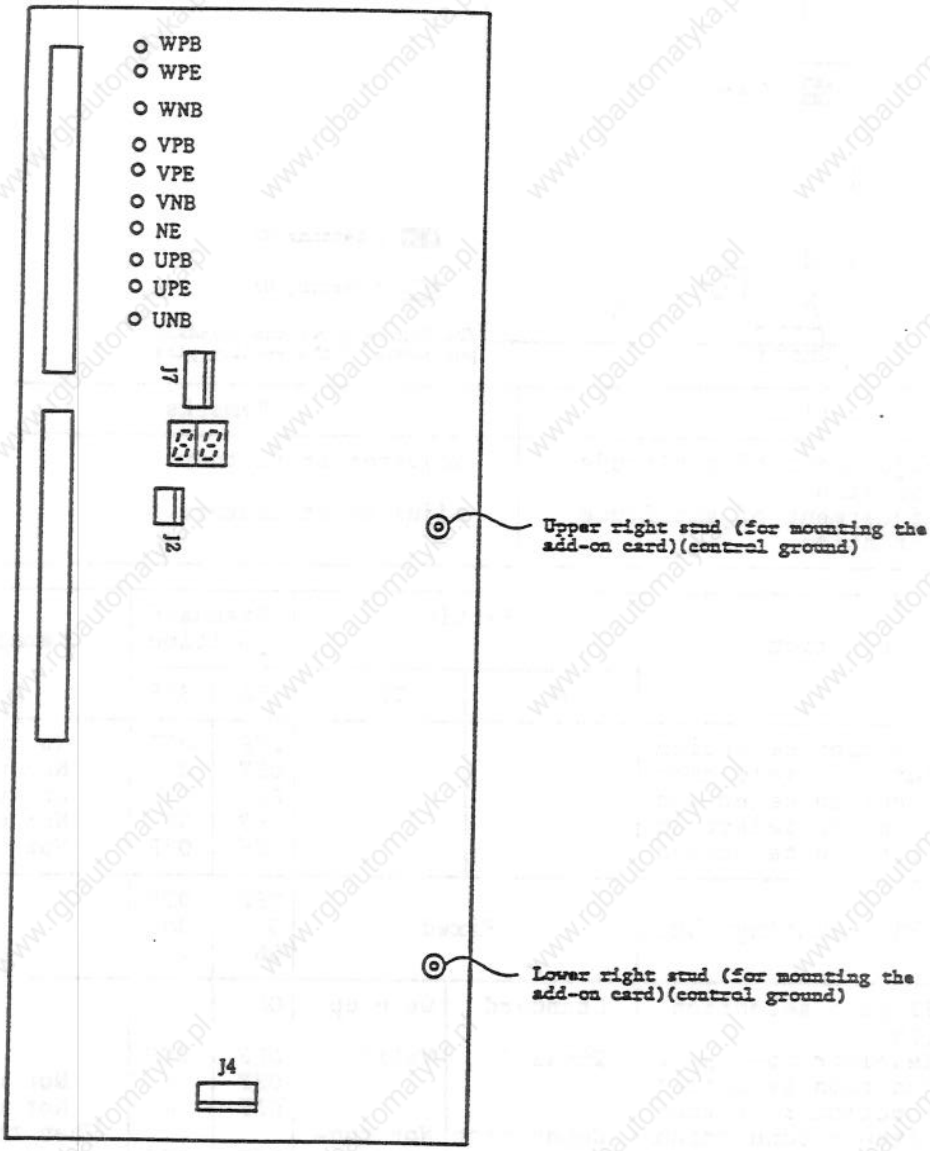

<table>
<tr><th>Terminal name</th><th>Signal name</th><th>Ground terminal</th><th>Signal, description, and waveform</th></tr>
<tr><td>J2-1<br>J2-2<br>J2-3</td><td>IV<br>IU<br>AG</td><td>J2-3</td><td>Current of motor phase V<br>Current of motor phase U<br>Control ground<br>Example of waveform) The waveform depends on the load amount.<br>IU/IV<br><br>IU/IV<br> 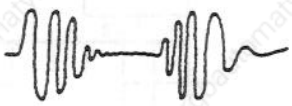 <br>Acceleration Deceleration<br><br><table><tr><th>Motor</th><th>Current amount per volt</th></tr><tr><td>HA23/23</td><td>3.0 A/V</td></tr><tr><td>40/43</td><td>6.2</td></tr><tr><td>80/83</td><td>10.4</td></tr><tr><td>100</td><td>15.6</td></tr><tr><td>103/200</td><td>20.0</td></tr><tr><td>203/300</td><td>31.2</td></tr><tr><td>700</td><td>41.6</td></tr><tr><td>900</td><td>52.0</td></tr></table>The maximum current of each motor is equivalent to 3.8 V.</td></tr>
<tr><td>J4-1<br>J4-2<br><br>J4-3</td><td>A<br>B<br><br>Z</td><td>Lower right stud</td><td>Encoder, phase A<br>Encoder, phase B<br><br>Encoder, phase Z<br>Example of waveform) When the motor shaft is rotated CCW from the view of the load:<br> 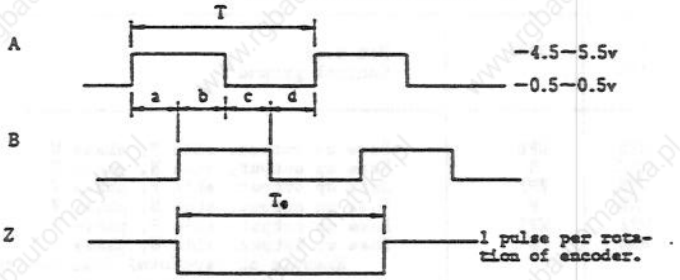 <br><br>R : Motor speed [rpm]<br>Encoder: OSE5K-6-8-108 (5000 p/r)<br>$T = \frac{60}{R \times 5000}$ [sec]<br>$a, b, c, d = \frac{1}{4}T \pm \frac{1}{12}T$<br>To = T - 3T</td></tr>
</table>

| Terminal name | Signal name | Ground terminal | Signal, description, and waveform |
|---|---|---|---|
| J4-4<br>J4-5<br>J4-6 | U<br>V<br>W | Lower right stud | Encoder, phase U<br>Encoder, phase V<br>Encoder, phase W<br>Example of waveform) When the motor shaft is rotated CCW from the view of the load:<br> 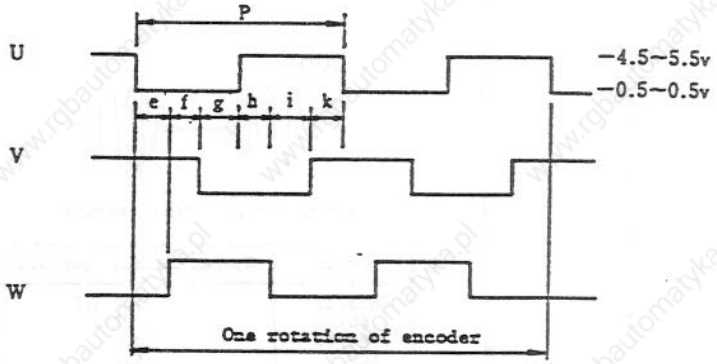 <br><br>R : Motor speed [rpm]<br>$P = \frac{60}{R \times 2}$<br>$e \cdot f \cdot g \cdot h \cdot j \cdot k = \frac{1}{6}P \pm \frac{1}{900}P$ |
| J7-1<br>J7-2<br>J7-3<br>J7-4 | P5<br>5G<br>P15<br>N15 | J7-2 | +5V 4.75 - 5.25V<br>Control ground<br>+15V 14.25 - 15.75V<br>-15V -14.25 - -15.75V |
| J7-5<br>J7-6 | AN<br>15G | J7-5 | Not used<br>Control ground |
| UPB<br>UNB<br>VPB<br>VNB<br>WPB<br>WNB | UPB<br>UNB<br>VPB<br>VNB<br>WPB<br>WNB | UPE<br>N<br>VPE<br>N<br>WPE<br>N | Base up output, side P, phase U<br>Base up output, side N, phase U<br>Base up output, side P, phase V<br>Base up output, side N, phase V<br>Base up output, side P, phase W<br>Base up output, side N, phase W<br>Example of waveform) When the servo ON stops:<br> 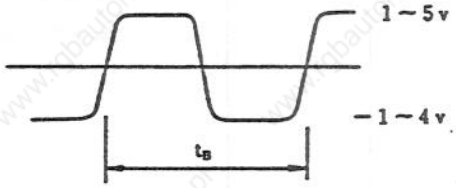 <br><br>$t_B \fallingdotseq 444\mu s$ |

(2) RF31

| Terminal name | Signal name | Ground terminal | Signal, description, and waveform |
|---|---|---|---|
| CP-1<br>CP-2<br>CP-3 | A<br>B<br>Z | Lower right stud | Encoder, phase A<br>Encoder, phase B<br>Encoder, phase Z<br>Example of waveform) When the motor shaft is rotated CCW from the view of the detector: |

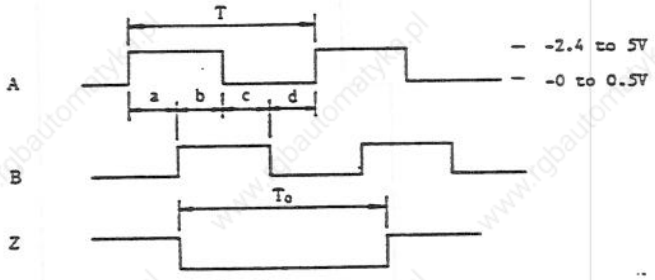


R : Motor speed [rpm]
Encoder: OSE5K-2T (5000 p/r)

$$T = \frac{60}{R \times 5000} \text{ [sec]}$$

$$a, b, c, d = \frac{1}{4}T \pm \frac{1}{12}T$$

$$To = T - 3T$$

RF31 card

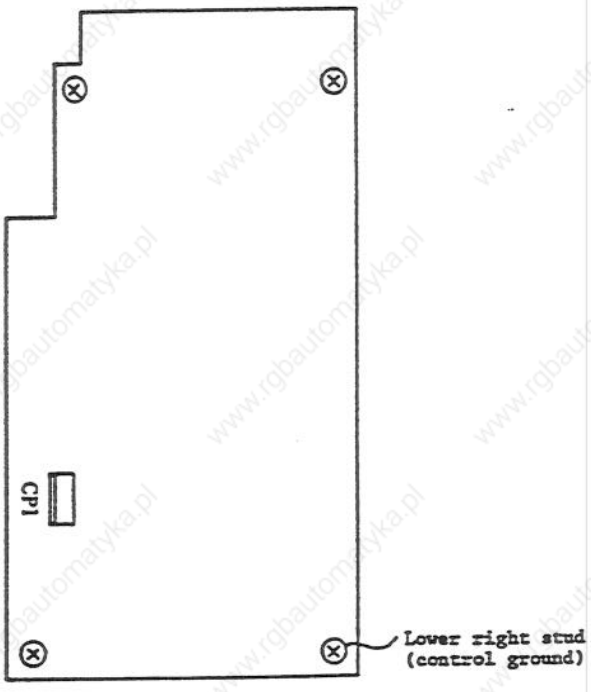

(3) RF33

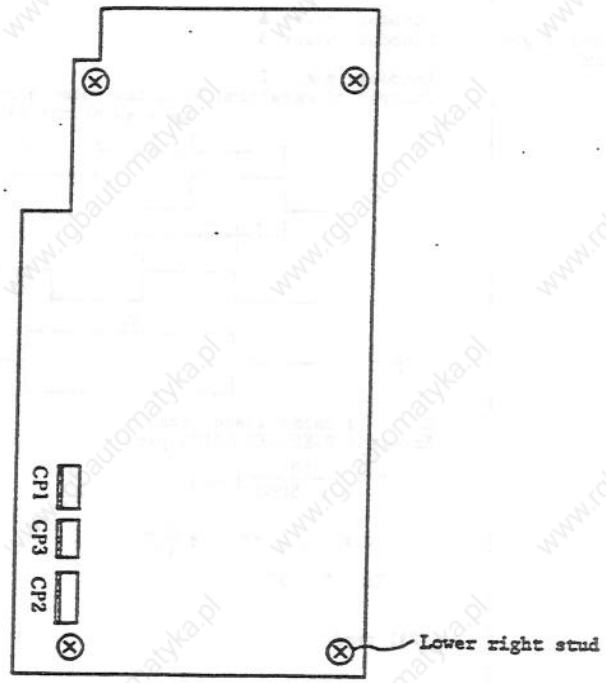

| Terminal name | Signal name | Ground terminal | Signal, description, and waveform |
|---|---|---|---|
| CP1-1<br>CP1-2<br>CP1-3 | EX<br>FB<br>15G | CP1-3 | Rectangular waveform for exciting resolver<br>Rectangular waveform of resolver FB<br>Control ground<br>Example of waveform)<br> 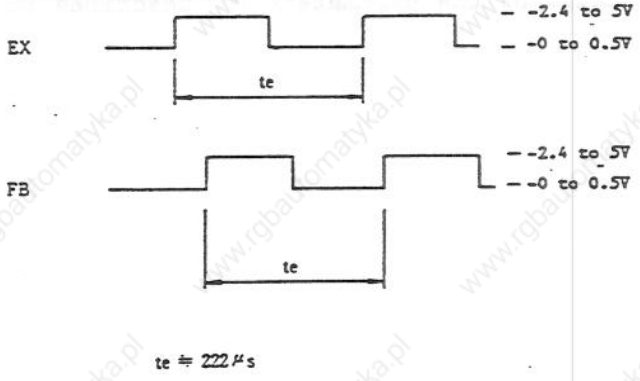 <br><br>te ≒ 222 μs |
| CP3-1<br>CP3-2<br>CP3-3 | A<br>B<br>Z | Lower right stud | Encoder, phase A<br>Encoder, phase B<br>Encoder, phase Z<br>Example of waveform) When the motor shaft is rotated CCW from the view of the detector:<br> 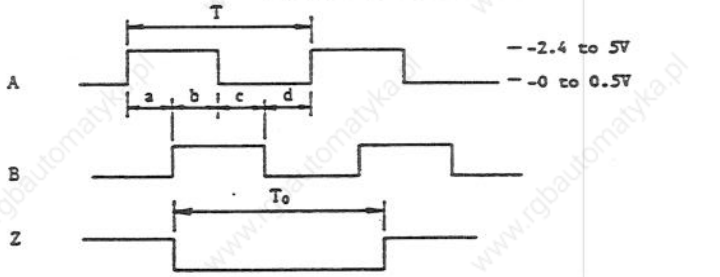 <br><br>R : Motor speed [rpm]<br>Encoder: OAER-SK-1X (5000 p/r)<br>$T = \frac{60}{R \times 5000}$ [sec]<br>$a, b, c, d = \frac{1}{4}T \pm \frac{1}{12}T$<br>To = T - 3T |
| CP2-1 | FBL | CP2-3 | Resolver FB level<br>Example of waveform)<br> 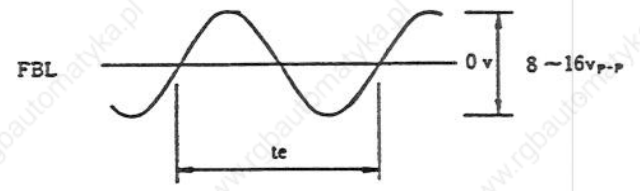 <br><br>te ≒ 222 μs |
| CP2-2<br>CP2-3<br>CP2-4 | P15<br>15G<br>N15 | CP2-3 | +15V control power 14.25 - 15.75V<br>Control ground<br>-15V control power -14.25 - -15.75V |

# 7. DETAILS OF SERVO PARAMETERS

There are 32 servo parameters. The display method and setting/operation method of them depend on the NC model. For details, see the related instruction manual.
The details of the parameters are described in the following.

Description of parameter

| | Item | | Description | Setting range (unit) |
|---|---|---|---|---|
| 1 | PC1 | | Sets the number of gear teeth on the motor side. (PC1 and PC2 should be set to the smallest ratio of the integers.) | 1 to 30. When the value exceeds the above range, see Note 1. |
| 2 | PC2 | | Sets the number of gear teeth on the machine side. (PC1 and PC2 should be set to the smallest ratio of the integers.) | 1 to 30. When the value exceeds the above range, see Note 1. |
| 3 | PGN | | Sets the position loop gain in the unit of 0.25. Normally sets this parameter to 33.00. | 1 to 200 (rad/sec) |
| 4 | LGN | | Sets the speed PI-P control feedback gain. In the speed PI control state, sets this parameter to 0. | Setting in Hex. |
| 5 | VG1 | | Sets the speed loop gain. Normally sets this parameter to 150. To improve the repeatability, increase this parameter value (to 200 to 300). However, vibration and sound also increase. | 1 to 500 |
| 6 | VG2 | | This parameter is set when the VG1 variable function is used. Sets the speed loop gain at the motor rating speed x 1.2. When this function is not used, sets this parameter to 0. | -32768 to 32767 |
| 7 | VIL | | Sets the ratio of the lag compensation of the speed loop. When this parameter value is set to 10000, the lag compensation is not performed. To decrease the gain, decreases this parameter value. However, when bit 0 of the parameter SSF is 0, this setting becomes invalid and this parameter value is treated as if it were set to 10000. When the parameter is valid, normally this parameter is set to 9990. | 9000 to 10000 |

| | Item | | Description | Setting range (unit) |
|---|---|---|---|---|
| 8 | VIA | | Sets the frequency of the leading compensation of the speed loop.<br>To improve the response property, increases the parameter value.<br>Normally sets this parameter to the standard value.<br>The response property is operated by VG1.<br>Normally sets this parameter to 682. | 163 to 16384<br>(0.085 rad/sec) |
| 9 | IQA | | Internal compensation of current loop.<br>Normally sets this parameter to the standard value.<br>See the (separate covered) standard setting. | 1 to 7680 |
| 10 | IDA | | Internal compensation of current loop.<br>Normally sets this parameter to the standard value.<br>See the (separate covered) standard setting. | 1 to 32767 |
| 11 | IQG | | Internal compensation of current loop.<br>Normally sets this parameter to the standard value.<br>See the (separate covered) standard setting. | 1 to 32767 |
| 12 | IDG | | Internal compensation of current loop.<br>Normally sets this parameter to the standard value.<br>See the (separate covered) standard setting. | 100 to 5000 |
| 13 | ILP | | Sets the current limit value.<br>Multiplies the current value (peak value, A) to be limited by the magnification in the following table to set the parameter.<br>A value exceeding the maximum current value cannot be set. | 1 to 1364 |
| 14 | ILN | | | -1 to -1364 |
| 15 | FFC | | Not used. Normally sets this parameter to 0. | |
| 16 | TGN | | Sets the gain of the lost motion compensation.<br>When this parameter is set to 0, the compensation gain is 0. When this parameter is set to 100, 100% of compensation is performed.<br><br>(Note) When the gain is compensated, check that bit E of the parameter STY is set to 1. When bit E is 0, the compensation does not work. | 0 to 200 (%) |

| Motor model | Max. current | Magnification |
|---|---|---|
| HA053, 13 | 5.5 Ap | 248.0 |
| 23, 33 | 11.5 | 118.6 |
| 40, 43 | 24.0 | 56.8 |
| 80, 83 | 40.0 | 34.1 |
| 100 | 60.0 | 22.7 |
| 103, 200 | 80.0 | 17.1 |
| 203, 300 | 120.0 | 11.4 |
| 700 | 160.0 | 8.5 |
| 900 | 200.0 | 6.8 |

| | Item | | Description | Setting range (unit) |
|---|---|---|---|---|
| 17 | STY | | Setting for servo loop | Setting in Hex |

| F | E | D | C | B | A | 9 | 8 | 7 | 6 | 5 | 4 | 3 | 2 | 1 | 0 |
|---|---|---|---|---|---|---|---|---|---|---|---|---|---|---|---|
| VDR | SMC | | | FBC | FBF 3 | FBF 2 | FBF 1 | ABS | PDC | FBD | FCL | PD 2 | PD 1 | VD 2 | VD 1 |

**VDR** Speed detector connector [Normally 0]

0: Direction A or C (same or reverse direction of motor Cannon connector)
1: Direction B or D (direction perpendicular to motor Cannon connector)

**SMC** Lost motion compensation [Normally 0]

0: Does not work.
1: Works. (the gain is controlled by TGN.)

**FBC** Speed FB compensation [Normally 0]

0: Not to be performed
1: To be performed (The jitter is compensated in light load state.)

**FBF3 FBF2 FBF1** Compensation of speed FB

When the machine vibrates, by compensating the speed FB, the machine vibration can be reduced.
According to the machine resonance frequency, by referring to the following table, set FBF1 to FBF3.
The speed FB compensation of the conventional model MR-S series is equivalent to 100.

| FBF3 | FBF2 | FBF1 | Frequency for reduction |
|---|---|---|---|
| 1 | 1 | 1 | 400 to 900 |
| 1 | 0 | 0 | 250 to 450 |
| 0 | 1 | 0 | 200 to 300 |
| 1 | 1 | 0 | 180 to 250 |
| 0 | 0 | 1 | 140 to 200 |
| 1 | 0 | 1 | 120 to 180 |
| 0 | 1 | 1 | 100 to 150 |
| 0 | 0 | 0 | The speed FB is not compensated. |

**ABS** Absolute value detection function

0: Does not work.
1: Works. (Valid in absolute value system)

**PDC** Position feedback polarity

0: Positive polarity (motor reverse load mounting direction or same direction)
1: Negative polarity (reverse direction of motor reverse load side)

<table>
<tr><th></th><th colspan="2">Item</th><th>Description</th><th>Setting range (unit)</th></tr>
<tr><td>17</td><td>STY</td><td></td><td>
FCL Servo loop<br>
0: Semi-closed loop<br>
1: Closed loop (including ball screw end)<br><br>
PD2 | PD1 Position detector connection card<br><br>
VD2 | VD1 Speed detector connection card<br><br>
<table>
<tr><th>Connection card</th><th>PD2/VD2</th><th>PD1/VD1</th></tr>
<tr><td>RG101<br>RF31, RF33</td><td>0<br>0</td><td>0<br>1</td></tr>
</table>
Example) The parameters values depend on the servo amplifier type.
<table>
<tr><th>Servo amplifier</th><th>PD2</th><th>PD1</th><th>VD2</th><th>VD1</th><th></th></tr>
<tr><td>E01</td><td>0</td><td>0</td><td>0</td><td>0</td><td>0</td></tr>
<tr><td>E31</td><td>0</td><td>1</td><td>0</td><td>0</td><td>4</td></tr>
<tr><td>E33</td><td>0</td><td>0</td><td>0</td><td>1</td><td>1</td></tr>
<tr><td></td><td>0</td><td>1</td><td>0</td><td>1</td><td>5</td></tr>
<tr><td>Z33</td><td>0</td><td>1</td><td>0</td><td>1</td><td>5</td></tr>
</table>
</td><td></td></tr>
<tr><td>18</td><td>PIT</td><td></td><td>Sets the ball screw pitch (lead).</td><td>1 to 50 (mm)</td></tr>
<tr><td>19</td><td>RNG</td><td></td><td>
Sets the following value in the following table depending on the position detector.
<table>
<tr><th colspan="2">Position detector</th><th>RNG</th></tr>
<tr><td colspan="2">2500p/r (Detector built in HA053/13)</td><td>10</td></tr>
<tr><td colspan="2">3000p/r</td><td>12</td></tr>
<tr><td colspan="2">5000p/r { OSE5K-6-12-108<br>OSE5KN-6-12-108<br>OSE5KN-ET-3-9.52-0<br>OAER5K-1X-3-8-108<br>OAER5K-1X-ET-3-9.52-0 }</td><td>20</td></tr>
<tr><td colspan="2">25000p/r (OAER25K-1X-3-8-108)</td><td>100</td></tr>
<tr><td>Linear scale</td><td>PIT x 1μ</td><td></td></tr>
<tr><td>Inductosyn</td><td>Scale resolution</td><td></td></tr>
</table>
</td><td>1 to 1000</td></tr>
<tr><td>20</td><td>ORT</td><td></td><td>
Sets the thermal coefficient of the regeneration resistor overheat detection (OR, WOR).
<table>
<tr><th></th><th>①</th><th>②</th></tr>
<tr><td>Standard (without external regeneration resistor)</td><td>4680</td><td>4688</td></tr>
<tr><td>With external regeneration resistor</td><td>3010</td><td>3000</td></tr>
</table>
① MR-S11-33, 40, 80, 100, 200, 300<br>
② MR-S11-700, 900 (Standardly, 200W 20Ω external resistor x 3)
</td><td>51 to 18000 (100 ms)</td></tr>
</table>

| | Item | | Description | Setting range (unit) |
|---|---|---|---|---|
| 21 | OLT | | Sets the detection time constant of the motor overload detection (OL1, WOL).<br>Normally sets this parameter to 60 sec (setting value: 600) | 1 to 18000 (100 ms) |
| 22 | OLL | | Sets the detection level of the motor overload detection (OL1, WOL).<br>Normally sets this parameter to 150%. | 1 to 500 (%) |
| 23 | OD1 | | Sets the excessive error range during servo ON.<br>Sets the maximum deviation to the ideal droop (assuming that the load against the command is small).<br>Ideally, the deviation becomes 0. However, a deviation occurs due to the calculation error of ideal droop and the affect of the load. Thus, sets this parameter to 20% or more of the maximum droop in the rapid traverse state.<br> 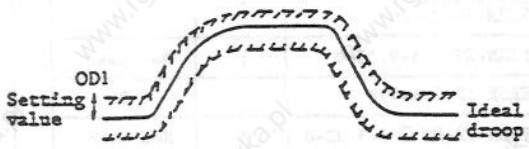 <br><br>When the droop is in the above hatched lines, an excessive error alarm occurs.<br>Example) Rapid traverse 15 m/min<br>Position loop gain 33<br>Interpolation unit 0.5μ<br>$\frac{15 \times 10^6}{60 \times 33 \times 0.5} \times 0.2 = 3030 \doteq 3100$<br>Rapid traverse / Setting<br>5 m/min / 1100<br>10 / 2100<br>15 / 3100<br>20 / 4100<br>30 / 6100 | 1 to 32767 (Interpolation unit) |
| 24 | ZRZ | | Sets the in-position determination value. Unless the in-position state takes place, the servo parameter cannot be changed.<br>Normally sets this parameter to 100. | 0 to 32767 (Interpolation unit) |

| | Item | | Description | Setting range (unit) |
|---|---|---|---|---|
| 25 | MTY | | Sets the model name of the motor and detector.<br><br>C 8 4 0<br>PEN \| ENT \| MTT<br><br>PEN Sets the position detector using the following table.<br><br>ENT Sets the speed detector (mounted on the motor reverse load side) using the following table:<br><br>In the case of semi-closed, PEN = ENT.<br><br>Detector / PEN / ENT<br>2500p/r: Detector built in HA053/13 — 6 — 6<br>3000p/r: Encoder — 0 — 0<br>5000p/r: OSE5K-6-12-108 OSE5KN-6-12-108 — 1 — 1<br>OSE5KN-ET □-3-9.52-0 — 1 — Not used<br>OAER5K-1X-3-8-108 — 9 — 9<br>OAER5K-1X-ET □-3-9.52-0 — 9 — Not used<br>25000p/r: OAER25K-1X-3-8-108 — A Note 1 — A Note 1<br>Linear scale: Inductosyn + A/D converter, Optical scale, Magnescale — 4 — 4<br><br>Note 1: In the 2400 rpm specification, B is used.<br><br>MTT Sets the motor model name using the following table.<br><br>Motor model name / MTT / Motor model name / MTT<br>EA40 00 HA053 8C<br>EA80 01 HA13 8D<br>EA100 02 HA23 8E<br>EA200 03 HA33 8F<br>EA300 04 HA43 80<br>EA700 05 HA83 81<br>EA900 06 HA103 32<br>HA203 33 | Setting in Hex |
| 26 | OD2 | | Sets the excessive error range in the servo off state. The setting value is the same as OD1. When this parameter is set to 0, the excessive error is not detected. | 0 to 32767 (Interpolation unit) |

| | Item | | Description | Setting range (unit) |
|---|---|---|---|---|
| 27 | SSF | | Selects special servo functions. | Setting in Hex |

| F | E | D | C | B | A | 9 | 8 | 7 | 6 | 5 | 4 | 3 | 2 | 1 | 0 |
|---|---|---|---|---|---|---|---|---|---|---|---|---|---|---|---|
| VSB | ODU | ODI | | CNG | PGR | DIR | IND | | | | ECM | | IDF | IDC | PID |

**PID** Speed loop lag compensation [Normally 0]

0: Does not work.
1: Works.

**IDC** Improves the response property when the above PID is set in the closed loop.

**IDF** Set for improvement
(available from version B0 or later)

| | IDF | IDC | PID |
|---|---|---|---|
| Semi-closed loop standard | 0 | 0 | 0 |
| Closed-loop standard | 0 | 0 | 1 |
| Closed-loop response property improvement | 1 | 1 | 1 |

**ECM** High speed, high accuracy system
(when connected to M300V series)

0: Normal system
1: High speed, high accuracy system

**FBD** Feedback error detection function

0: Works.
1: Does not work.

**IND**
**DIR** Sets these parameters when the width of phase Z of the scale feedback is wide and when the scale has many Z phases.
(Inductosyn + A/D converter, Magnescale, etc.)

| | DIR | IND |
|---|---|---|
| Zero point return direction + | 0 | 1 |
| Zero point return direction - | 1 | 1 |

| | Item | | Description | Setting range (unit) |
|---|---|---|---|---|
| 27 | SSF | | PGR PC1, PC2 setting range extension function<br>0: Invalid<br>1: Valid (The position loop gain PGN is an integer. The values of PC1 and PC2 can be increased up to 4 times. However, PGN is changed after the NC power is tuned on and then off. (See Note 1.)<br><br>CNG Compensation in closed-loop stop state<br>0: Invalid<br>1: Valid (When 1μ or 0.1μ scale is used, if a small jittar of 1μ or 0.1μ or less is present, it can compensated.)<br><br>OD1 OD1, OD2 parameter always change<br>0: Invalid<br>1: Valid (When NC is used for a special application such as push-stop, this parameter is used. When this parameter becomes valid, without turning off the NC power, the OD1 and OD2 parameters can be changed.)<br><br>ODU x 10 function of OD1 and OD2 parameters<br>0: Invalid<br>1: Valid (This parameter is used when the values of OD1 and OD2 exceed 32700. When this parameter is valid, the setting values of OD1 and OD2 become the real excessive error range.)<br><br>VBS Software blind zone range compensation<br>0: Invalid<br>1: Valid (The amount of compensation is controlled by SP3.) | |

| | Item | | Description | Setting range (unit) |
|---|---|---|---|---|
| 28 | SP1 | | Normally sets this parameter to 0. (Not used) | -32768 to 32767 |
| 29 | SP2 | | When the machine vibrates in the rapid traverse state, this parameter is used.<br>(Normally sets this parameter to 0.) | -32768 to 32767 |
| 30 | SP3 | | Sets the software blind zone compensation amount.<br>When VBS (bit F) of SSF is set, this parameter is valid.<br>In the valid state, normally sets this parameter to 30.<br>When this parameter is not used, sets this parameter to 0. | -32768 to 32767 |
| 31 | SP4 | | Current loop compensation parameter.<br>When this parameter is used, sets this parameter to 10. | -32768 to 32767 |
| 32 | SP5 | | Unbalance torque compensation<br>This parameter is used when bit E of the parameter SSF or bit 0 of SSF is set. While observing the current load (%) of the servo monitor on the I/F diagnosis screen, manually feeds several ten pulses in the + direction and - direction. When the current load is positive, checks the maximum value. When the current load is negative, checks the minimum value. Sets the average of the values in the + direction and - direction to SP5. When the average is negative, adds 65536 to the parameter value.<br><br>Example 1)<br>When the current load is +50 % in the + direction and -10% in the - direction,<br>$\frac{50 - 10}{5} = 20$ Thus, sets this parameter SP5 to 20.<br><br>Example 2)<br>When the current load is -30% in the + direction and -10% in the - direction,<br>$\frac{-30 - 20}{2} = -20$ Since the value is negative, 65537 - 20 = 65517. Sets this parameter to 65517. | -32768 to 32767 |

Parameter standard setting list for each motor model

| Parameter | | 3000 rpm standard motor | | | | | | | |
|---|---|---|---|---|---|---|---|---|---|
| | | HA053 | HA13 | HA23 | HA33 | HA43 | HA83 | HA103 | HA203 |
| 1 | PC1 | | | | | | | | |
| 2 | PC2 | | | | | | | | |
| 3 | PGN | 33.00 | 33.00 | 33.00 | 33.00 | 33.00 | 33.00 | 33.00 | 33.00 |
| 4 | LGN | 0 | 0 | 0 | 0 | 0 | 0 | 0 | 0 |
| 5 | VG1 | 70 | 70 | 100 | 100 | 150 | 150 | 150 | 150 |
| 6 | VG2 | 0 | 0 | 0 | 0 | 0 | 0 | 0 | 0 |
| 7 | VIL | 10000 | 10000 | 10000 | 10000 | 10000 | 10000 | 10000 | 10000 |
| 8 | VIA | 682 | 682 | 682 | 682 | 682 | 682 | 682 | 682 |
| 9 | IQA | 1024 | 1024 | 2048 | 2048 | 1024 | 1024 | 1024 | 1024 |
| 10 | IDA | 1024 | 1024 | 2048 | 2048 | 2048 | 2048 | 2048 | 2048 |
| 11 | IQG | 256 | 256 | 224 | 224 | 256 | 256 | 256 | 256 |
| 12 | IDG | 256 | 256 | 224 | 224 | 512 | 512 | 512 | 512 |
| 13 | ILP | 1230 | 1230 | 1230 | 1230 | 1230 | 1230 | 1230 | 1230 |
| 14 | ILN | -1230 | -1230 | -1230 | -1230 | -1230 | -1230 | -1230 | -1230 |
| 15 | FFC | 0 | 0 | 0 | 0 | 0 | 0 | 0 | 0 |
| 16 | TGN | 0 | 0 | 0 | 0 | 0 | 0 | 0 | 0 |
| 17 | STY | | | | | | | | |
| 18 | PIT | | | | | | | | |
| 19 | RNG | | | | | | | | |
| 20 | ORT | 4680 | 4680 | 4680 | 4680 | 4680 | 4688 | 4688 | 4680 |
| 21 | OLT | 600 | 600 | 600 | 600 | 600 | 600 | 600 | 600 |
| 22 | OLL | 150 | 150 | 150 | 150 | 150 | 150 | 150 | 150 |
| 23 | OD1 | | | | | | | | |
| 24 | ZRZ | 100 | 100 | 100 | 100 | 100 | 100 | 100 | 100 |
| 25 | MTY | xx8C | xx8D | xx8E | xx8F | xx80 | xx81 | xx32 | xx33 |
| 26 | OD2 | | | | | | | | |
| 27 | SSF | 0000 | 0000 | 0000 | 0000 | 0000 | 0000 | 0000 | 0000 |
| 28 | SP1 | 0 | 0 | 0 | 0 | 0 | 0 | 0 | 0 |
| 29 | SP2 | 0 | 0 | 0 | 0 | 0 | 0 | 0 | 0 |
| 30 | SP3 | 0 | 0 | 0 | 0 | 0 | 0 | 0 | 0 |
| 31 | SP4 | 0 | 0 | 0 | 0 | 0 | 0 | 0 | 0 |
| 32 | SP5 | 0 | 0 | 0 | 0 | 0 | 0 | 0 | 0 |

* Blank columns are set depending on the machine specification.

| Parameter | 2000 rpm standard motor | | | | | | | Remarks |
|---|---|---|---|---|---|---|---|---|
| | HA40 | HA80 | HA100 | HA200 | HA300 | HA700 | HA900 | |
| 1 PC1 | | | | | | | | |
| 2 PC2 | | | | | | | | |
| 3 PGN | 33.00 | 33.00 | 33.00 | 33.00 | 33.00 | 25.00 | 25.00 | |
| 4 LGN | 0 | 0 | 0 | 0 | 0 | 0 | 0 | |
| 5 VG1 | 150 | 150 | 150 | 150 | 150 | 250 | 250 | |
| 6 VG2 | 0 | 0 | 0 | 0 | 0 | 0 | 0 | |
| 7 VIL | 10000 | 10000 | 10000 | 10000 | 10000 | 10000 | 10000 | |
| 8 VIA | 682 | 682 | 682 | 682 | 682 | 682 | 682 | |
| 9 IQA | 2048 | 2048 | 1024 | 1024 | 1024 | 1024 | 1024 | |
| 10 IDA | 2048 | 2048 | 2048 | 2048 | 2048 | 2048 | 2048 | |
| 11 IQG | 512 | 512 | 256 | 256 | 256 | 200 | 200 | |
| 12 IDG | 512 | 512 | 512 | 512 | 512 | 256 | 256 | |
| 13 ILP | 1230 | 1230 | 1230 | 1230 | 1230 | 1230 | 1230 | |
| 14 ILN | -1230 | -1230 | -1230 | -1230 | -1230 | -1230 | -1230 | |
| 15 FFC | 0 | 0 | 0 | 0 | 0 | 0 | 0 | |
| 16 TGN | 0 | 0 | 0 | 0 | 0 | 0 | 0 | |
| 17 STY | | | | | | | | |
| 18 PIT | | | | | | | | |
| 19 RNG | | | | | | | | |
| 20 ORT | 4680 | 4680 | 4680 | 4680 | 4680 | 4688 | 4688 | ORT: When the regeneration option resistor is used, 3010 should be set. However, when HA700/ HA900 is used, 3000 should be set. |
| 21 OLT | 600 | 600 | 600 | 600 | 600 | 600 | 600 | |
| 22 OLL | 150 | 150 | 150 | 150 | 150 | 150 | 150 | |
| 23 OD1 | | | | | | | | |
| 24 ZRZ | 100 | 100 | 100 | 100 | 100 | 100 | 100 | |
| 25 MTY | xx00 | xx01 | xx02 | xx03 | xx04 | xx05 | xx06 | |
| 26 OD2 | | | | | | | | |
| 27 SSF | 0000 | 0000 | 0000 | 0000 | 0000 | 0000 | 0000 | |
| 28 SP1 | 0 | 0 | 0 | 0 | 0 | 0 | 0 | |
| 29 SP2 | 0 | 0 | 0 | 0 | 0 | 0 | 0 | |
| 30 SP3 | 0 | 0 | 0 | 0 | 0 | 0 | 0 | |
| 31 SP4 | 0 | 0 | 0 | 0 | 0 | 0 | 0 | |
| 32 SP5 | 0 | 0 | 0 | 0 | 0 | 0 | 0 | |

* Blank columns are set depending on the machine specification.

Parameter setting list for each servo type

| Servo type | Standard type | High accuracy type | Ball screw end detection type | Scale F/B type | High accuracy scale F/B type | Inductosyn F/B type | Absolute position detection type | Absolute position ball screw end detection type |
|---|---|---|---|---|---|---|---|---|
| System | Incremental detection | | | | | | Absolute position detection | |
| | Semi-closed loop | | Closed loop | | | | Semi-closed loop | Closed loop |
| | 1 micron | Submicron | 1 micron | 1 micron | Submicron | 1 micron | 1 micron | 1 micron |
| Servo amplifier type | MR-S □-E01 | MR-S □-E33 | MR-S □-E31 | MR-S □-E31 | MR-S □-E33 | MR-S □-E31 | MR-S □-Z33 | MR-S □-Z33 |
| 17 STY | xx00 | xx05 | xx14<br>xx54 | xx14<br>xx54 | xx11<br>xx51 | xx14<br>xx54 | xx85 | xx95<br>xxD5 |
| 19 Note 1 RNG (HA053 /13) | 20 (10) | 100 | 20 | Note 2 $\frac{\text{PITx1}\mu}{\text{Scale resolution}(\mu)}$ | Note 2 $\frac{\text{PITx1}\mu}{\text{Scale resolution}(\mu)}$ | Note 2 $\frac{\text{PITx1}\mu}{\text{Scale resolution}(\mu)}$ | 20 | 20 |
| 25 Note 1 MTY (HA053 /13) | 11xx (66xx) | Note 3 AAxx BBxx | 11xx | 41xx | 4Axx | 41xx | 99xx | 91xx |

Note 1: The item in parentheses is a parameter according to the HA053/13 motor. When the HA053/13 motor is used, the servo type is restricted. For details, contact Mitsubishi Electric.

2: For PIT, the value of the parameter No.18 should be used.

3: BBxx for the 2400 rpm specification

Note (1) Restrictions of PC1 and PC2

Normally the values of PC1 and PC2 range from 1 to 30. However, when the following restrictions are satisfied, other values except for 1 to 30 can be set.
Even in the range from 1 to 30, the following restrictions should be satisfied.

1. Semi-closed system

(1) PC1 ≤ 2730 / (PIT x RNG)
(2) PC2 ≤ 32767 / (RNG x U)
U: Interpolation unit

2. Closed system (including ball screw end)

(1) PC1 ≤ 2730 / (PIT x RNG)
(2) PC2 ≤ 8190 / PGN
U: Interpolation unit

Substitute the above equation for the PIT value where PIT and RNG are reduced to the lower term. However, RNG should be a value before reduced to the lower term.

Example In the case of a full closed loop where PIT = 10, RNG = 20, U = 0.5, PGN = 33, PIT = 1.

(1) PC1 ≤ 5460/(1 x 20) ≒ 273
(2) PC2 ≤ 32767/(20 x 0.5) ≒ 3276
(3) PC2 ≤ 8190/33 ≒ 248

∴ PC1 ≤ 273, PC2 ≤ 248

3. When PGR of SSF bit A is valid, the restrictions are changed.

1) Semi-closed system
(1) PC1 ≤ 10920/(PIT x PNG)
(2) PC2 ≤ 32767/(RNG x U)

2) Closed system
(1) PC1 ≤ 10920/(PIT x RNG)
(2) PC2 ≤ 32760/PGN

Note (2) Interpolation unit (U)

Unit of NC. The values shown in the left-hand figure depend on the command unit (input unit).

| Command unit (input unit) | Interpolation unit (U) |
|---|---|
| 10μ/5μ | 5μ |
| 1μ/0.5μ | 0.5μ |
| 0.1μ/0.05μ | 0.05μ |

Note (3) The values of the parameters 3 to 16 are always valid.
The values of the parameters 1, 2 and 17 to 32 are valid after the power is turned off and then on.

Note (4) Example of setting PC1, PC2, and PIT

| | Item | Setting example |
|---|---|---|
| 1<br>2 | PC1,<br>PC2, | (1) When the detector is in the motor reverse load side:<br>o Ball screw<br>By reducing the gear ratio of the motor side and the machine side into the lower term, sets the parameters to the resultant values.<br>Example) When the speed reduction ratio is 18/30, reduces the values and obtains 3/5. Sets 3/5 to these parameters.<br> 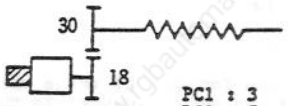 <br>PC1 : 3<br>PC2 : 5<br>o Rotary shaft<br>Reduces the gear ratio of the motor side and the machine side into the lower term and sets the parameters to the resultant values.<br>Example) When the rotation angle is 360°.<br> 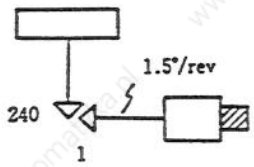 <br>PC1 : 1<br>PC2 : 240<br>(PIT : 360)<br>(2) When the detector is on the machine side (including ball screw end):<br>o Ball screw<br>Same as linear scale (1)<br> 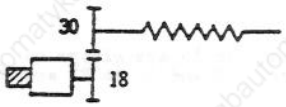 <br>PC1 : 3<br>PC2 : 5<br>In the rotation type, sets the gear ratio of the motor and the detector.<br> 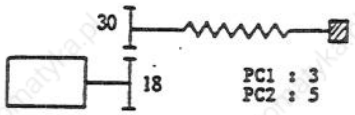 <br>PC1 : 3<br>PC2 : 5<br>Exception) When the gear structure is special.<br> 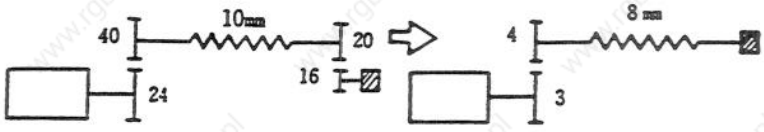 <br>$\frac{24}{40} \times \frac{20}{16} = \frac{3}{4}$<br>PC1 : 3<br>PC2 : 4<br>PIT : 8 |

| | Item | Setting example |
|---|---|---|
| | PC1,PC2 continued | ○ Rotary shaft<br>Sets the gear ratio of the motor and detector.<br>Example<br> 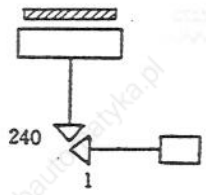 <br><br>PC1 : 1 (PIT : 360)<br>PC2 : 240<br>Exception) When the gear structure is special:<br> 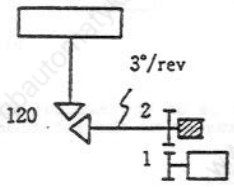 <br><br>PC1 : 1<br>PC2 : 2<br>PIT : 3 Sets these parameters to the left hand values. |
| 18 | PIT | (1) Ball screw<br>○ When the detector is on the motor reverse load side:<br>Sets the parameter to the ball screw pitch.<br>Example<br> 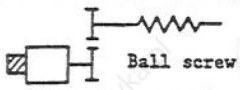 <br><br>PIT : 10<br>When the detector is on the machine side:<br>Sets the parameter to the ball screw pitch converted into the detector.<br>Example<br> 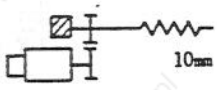 <br><br>PIT : 10<br>Exception) When the gear structure is special:<br> 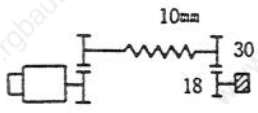 <br><br>$10 \times \frac{18}{30} = 6$<br>PIT : 6 |

| | Item | Setting example |
|---|---|---|
| | PIT continued | ○ When the detector is on the machine side (linear scale): Sets the ball screw pitch as it is. |

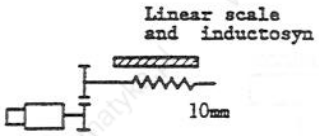


PIT : 10

(2) Rotary shaft

○ When the detector is on the motor reverse load side:
Sets the parameter to the rotation angle of one turn of the machine.
Normally sets this parameter to 360°.

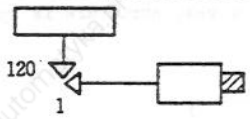


PIT : 360

○ When the detector is on the machine side (rotary inductosyn, etc.):
Sets the parameter to the rotation angle of one turn of the machine.

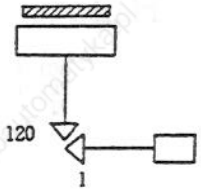


PIT : 360

Exception) When the gear structure is special:

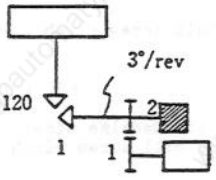


PC1 : 1
PC2 : 2
PIT : 3

Note (5) Setting examples of units and detectors

| Amplifier model name | | E-01 | E-31 | | | | | E-33 | | Z-33 | | |
|---|---|---|---|---|---|---|---|---|---|---|---|---|
| Speed detector | | OSE5K OSE5KN | OSE5K | | | | | OAER25K-1X | | OAER5K-1X | OSE5K | |
| Position detector | | | OSE5KN-ET (Ball screw end) | Linear scale (1μ) | Inductosyn AD converter 1/2000 | Rotary inductosyn 360P AD converter 1/2000 | Linear scale (0.1μ) | | Linear scale (0.1μ) | | OAER5K-1X-ET | |
| Servo parameter | 17. STY | 00 | 14<br>xx54 | 14<br>xx54 | 14<br>xx54 | xx14<br>xx54 | xx15<br>xx54 | xx05 | xx11<br>xx51 | xx85 | xx94<br>xxD4 | |
| | 19. RNG | 20 | 20 | PIT | PIT | 360 | PIT<br>x 10 | 100 | PIT<br>x 10 | 20 | 20 | |
| | 25. MTY | 11xx | 11xx | 41xx | 41xx | 41xx | 41xx | AAxx<br>(BBxx) | 4Axx | 99xx | 91xx | |
| | 27. SSF | 0000 | 0000 | 0000 | 0100( )<br>0300(-) | 0100( )<br>0300(-) | 0000 | 0000 | 0000 | 0000 | 0000 | |
| | | | | | | | | | | | | |
| | Other | | | | | Example of PIT=360 and gear ratio is 1/90<br>PC1=1<br>PC2=90 | | OD1<br>OD2 x 10<br>ZR2 | | | | |
| Zero point return parameter | 4.graspc | 20,10,5,4,2,1 | 20,10,5,4,2,1 | Note) | 2, 1 | 2, 1 | Note) | 100,50,25,20,10 5,4,2,1 | Note) | 20 | 20 | |

Note) Any integer value where (A-phase output pulses between Z phases) x 4/1000 is divided by any integer and which is one of integer value of RNG. For a scale where the Z phase has only one pulse, any value which is one of integer value of RNG can be selected.

# 8. ABSOLUTE POSITION SYSTEM (T20/T30 SYSTEM AND M300 SERIES)

## 8.1 ABSOLUTE POSITION SYSTEM STRUCTURING PARAMETERS

(1) Absolute position function valid parameter:
[NC basic specification] Each axis

| | | |
|---|---|---|
| M3 | abson | 1 |
| T20/T30 | None | |

(2) Zero point return parameter:

| | | |
|---|---|---|
| M3 | grspc | 20 |
| T20/T30 | AU | 0 OR 20 |

(3) Absolute position detection type parameter: [Servo parameter]

i) Motor end detection

| | | | |
|---|---|---|---|
| M3 | #17 | STY | |
| T20/T30 | #17 | | |

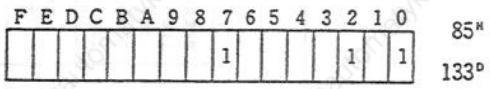


ii) Ball screw end detection

| | | | |
|---|---|---|---|
| M3 | #17 | STY | |
| T20/T30 | #17 | | |

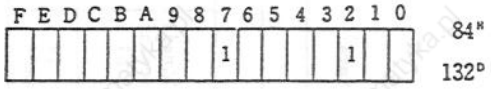


(4) Absolute position detection parameters: [Servo parameters]

i) Motor end detection

| | | | |
|---|---|---|---|
| M3 | #25 | MTY | |
| T20/T30 | #25 | | |

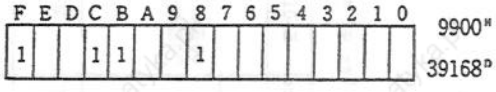


ii) Ball screw end detection

| | | | |
|---|---|---|---|
| M3 | #25 | MTY | |
| T20/T30 | #25 | | |

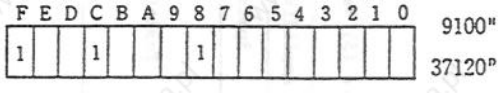

## 8.2 DOG TYPE ZERO POINT RETURN PARAMETERS

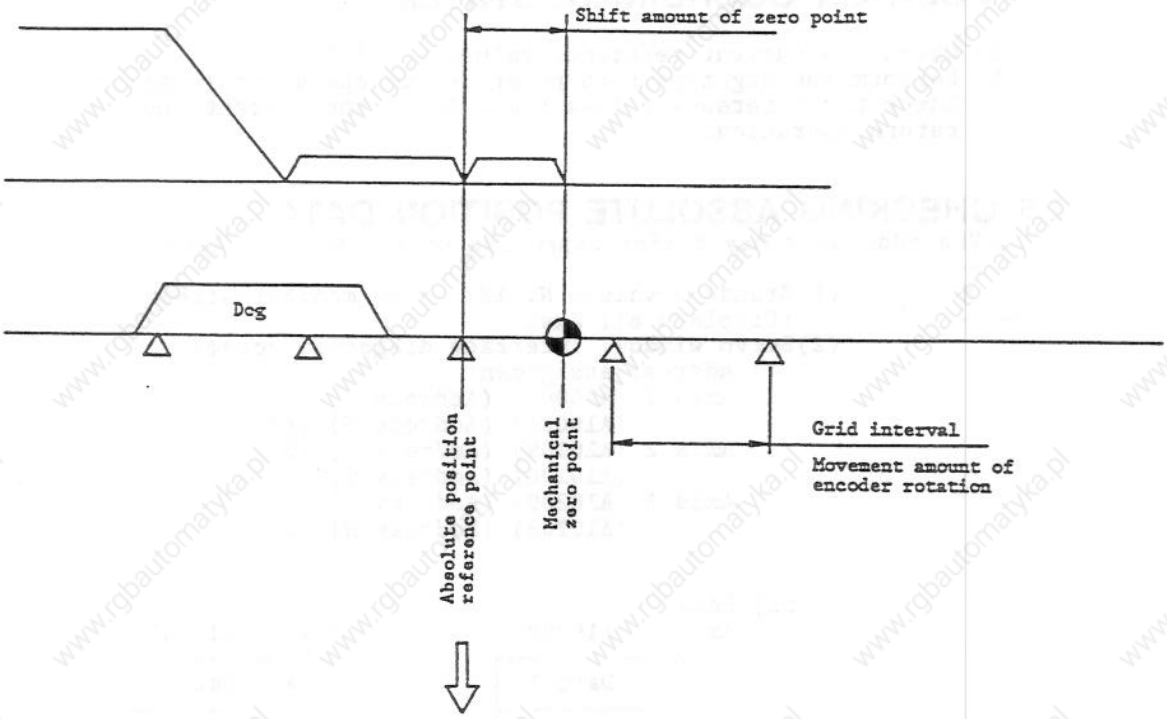


Setting absolute position reference values

- Lead SW counter value N
- Resolver zero point position 1X

NC backup data (fixed value)

(Note 1) Unless the dog type zero point return operation is performed, the absolute position reference values N and 1X are kept to the reference values of the former dog type zero point return operation.

(Note 2) Data of N and 1X is displayed on the servo monitor screen in the M3 system: on the I/F diagnosis screen in the T20/T30 system.

## 8.3 VERIFICATION PROCEDURE FOR ABSOLUTE POSITION DATA

(1) Set the zero point shift amount to 0.
(2) Perform the high speed zero point return operation (stops at the absolute value reference point).
Note: When the dog type zero point return operation is performed, N and 1X which are backed up in NC are set again.
(3) Check whether ni which is the current value of the lead switch and 1Xi of the 1X data are same as those of the reference values on the diagnosis screen.
(4) As a verification of the grid, check whether the value of the cyclic counter is near 0 or 20000 on the diagnosis screen.

## 8.4 WHEN AN ABNORMALITY OCCURS IN THE ABSOLUTE POSITION COORDINATE SYSTEM:

(1) Check the current reference values N and 1X.
(2) Perform the dog type zero point return operation (alarm release).
(3) Check the reference values N and 1X of the current dog type zero point return operation.

## 8.5 CHECKING ABSOLUTE POSITION DATA

(The addresses may differ depending on the ROM versions.)

M3

(1) Standard values N, 1X: Servo monitor screen
(Displays all axes.)
(2) Servo window: Interface diagnosis screen
i) Address assignment

```
Axis 1 (A10009) (Address L) (B)
       (A10008) (Address H) (B)
Axis 2 (A10109) (Address L) (B)
       (A10108) (Address H) (B)
Axis 3 (A10209) (Address L) (B)
   .   (A10208) (Address H) (B)
   .       .
   .       .
```

ii) Data

Axis 1 A10008

| 9 | |
|---|---|
| A | Data 1 |
| B | Data 2 |
| C | Data 3 |
| D | Data 4 |

Axis 2 A10108

| 9 | |
|---|---|
| A | Data 1 |
| B | Data 2 |
| C | Data 3 |
| D | Data 4 |

(3) Servo window addresses

| | Address H | Address L | Data L/H |
|---|---|---|---|
| Current lead switch value ni | 50 | 70 | Data 2,4 |
| Current resolver value 1Xi | 50 | 71 | Data 2,4 |
| Cyclic counter value | 50 | 72 | Data 3,4 |

T20/T30 (1) Standard values N, 1X: Diagnosis screen

```
Axis 1      N : 1CB102  (Data L)
                    3   (Data H)
            1X: 1CB104  (Data L)
                    5   (Data H)

Axis 2      N : 1CB112  (Data L)
                    3   (Data H)
            1X: 1CB114  (Data L)
                    5   (Data H)
```

(2)Servo data window: Diagnosis screen

i) Address assignment

181FF2 03 INPUT (Address assignment valid)

Axis 1

181F00 (Address L)

F01 (Address H)

Axis 2

181F10 (Address L)

. F11 (Address H)

.

ii) Data

Axis 1

| | |
|---|---|
| 181F02 | Data 1 |
| 03 | Data 2 |
| 04 | Data 3 |
| 05 | Data 4 |

Axis 2

| | |
|---|---|
| 181F12 | Data 1 |
| 13 | Data 2 |
| 14 | Data 3 |
| 15 | Data 4 |

(3)Servo window addresses

| | Address H | Address L | Data L/H |
|---|---|---|---|
| Current lead switch value ni | 50 | 70 | Data 1,3 |
| Current resolver value 1Xi | 50 | 71 | Data 1,3 |
| Cyclic counter value | 50 | 72 | Data 1,2 |

M310

(1)Standard values N, 1X: Servo monitor screen
(Display all axes)

(2)Servo window: Interface diagnosis screen

i) Address assignment

Axis 1 (9689) (Address L) (B)
(9688) (Address H) (B)
Axis 2 (9989) (Address L) (B)
(9988) (Address H) (B)
Axis 3 (9C89) (Address L) (B)
. (9C88) (Address H) (B)
. (9F89) .
. (9F88) .

| Address |
|---|
| 950C |
| 980C |
| 9B0C |
| 9E0C |

When the bit 7 is set to 1, the monitoring starts.
When the bit 7 is set to 0, the monitoring stops.

ii) Data

Axis 1 9688

| | |
|---|---|
| 9 | |
| A | Data 1 |
| B | Data 2 |
| C | Data 3 |
| D | Data 4 |

Axis 2 9988

| | |
|---|---|
| 9 | |
| A | Data 1 |
| B | Data 2 |
| C | Data 3 |
| D | Data 4 |

(3)Servo window addresses

| | Address H | Address L | Data L/H |
|---|---|---|---|
| Current lead switch value ni | 50 | 70 | Data 2,4 |
| Current resolver value 1Xi | 50 | 71 | Data 2,4 |
| Cyclic counter value | 50 | 72 | Data 3,4 |

MR-S amplifier Window function in M310L/M

(1) Set the address of the amplifier to the window address (W).

(2) When monitoring the data of the address being set in (1) above, set the window monitor start bit.
When the bit is set, the amplifier data is sampled to the window data every 3.5 ms and monitored.
When the monitor start bit is reset (set to 0), the monitoring of the amplifier data is stopped.

| | | Address | | | |
|---|---|---|---|---|---|
| | | Axis 1 | 2 | 3 | 4 |
| Address to be set | 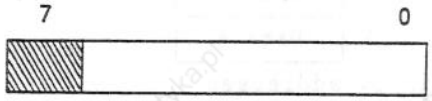 Window monitor start | 950C | 980C | 9B0C | 9E0C |
| | Window address | 9688 | 9988 | 9C88 | 9F88 |
| Address of data to be monitored | Window data | 968A | 998A | 9C8A | 9F8A |

## 8.6 ABSOLUTE POSITION DETECTION ALARMS

Errors relating to the absolute position detection are listed in the following table.

| No. | Abbre-viation | Name | Description |
|---|---|---|---|
| 25 | BA | Battery Alarm | The voltage of the battery for backing up the absolute position detection circuit on the RF33 card drops.<br>Replace the battery with a new one or charge it.<br>The absolute position may be lost. |
| E3* | WAC | Warning absolute counter error | Absolute position counter is wrong.<br>Error is suspected with the absolute position detector, encoder, cable or add-on card.<br>Initial setting may not be made. |
| E5 | WAB | Warning absolute detector error warning | The reference value of the resolver 1x backed up in NC or the encoder/resolver error is abnormal (20° < 1X < 340° and 365° < 1X or ERE > 50).<br>The absolute position may be lost. |
| A0* | WAT | Warning absolute first transmis-sion | When NC power is turned On, the data received form the absolute value detector are alarm incorrect. |
| A1* | WAS | Warning absolute serial signal | Under normal operations, the data received from the absolute value detector are incorrect. |
| A2 | WAV | Warning absolute battery voltage | Voltage drop on the battery which is installed on RF37X. |
| A3* | WAN | Warning absolute cable No. connection | Drop of power voltage to the absolute value detector. |
| A4* | WAP | Warning absolute position error | There is some error with the detector's A or B phase. |
| A5* | WAR | Warning absolute resolver | There is some error on resolver or feedback signal. |

# II AC SERVO MR-S12 SERIES MAINTENANCE MANUAL (2-AXIS INTEGRATED SERVO AMPLIFIER)

www.rgbautomatyka.pl

# 1. OUTLINE OF S10 SERIES AC SERVO SYSTEM

## 1.1 FEATURES OF S10 SERIES SERVO SYSTEM

(1) Connection to MELDAS M300 series NC
The S10 series AC servo system can be connected to a MELDAS M300 V series NC to provide high speed computation and high speed communication functions.
Thus, a servo system enriched with high accuracy control functions and a robust property can be set up. In addition, error due to tick motion which may occur in high response machinery can be compensated for.

(2) Series of AC servo systems
The HA series servo motor which provides high response and easy maintenance is used. A wide range of servo motors and servo amplifiers is lined up, thereby covering a wider power range than a conventional series. In addition, a wide range of multiple axis-type amplifiers are also provided.

(3) Performance enhancement by all-digital servo
All-digital control system used in the conventional model S series system is enhanced. Using a high speed CPU, the system provides high response, repeatability, and reliability for high speed as well as accuracy control operations.

(4) Intelligence
Individual CPUs control individual axes to enhance machining accuracy. Increasing the number of tuning parameters allows the system to be adjusted securely. In addition, the AI diagnosis function is also improved.

(5) Improvement of reliability by utilizing less parts and cables.
Using gate arrays for control card components allows the number of parts to be significantly reduced. In addition, the main circuit components mounted on the power card contribute to reducing the number of cables.

(6) High speed, highly accurate machining(0.1 $\mu$m/pulse command)
The maximum speed in submicron(0.1 $\mu$m/pulse command) selection specification is increased up to 2400 rpm.

(7) Absolute position detection system
An absolute position detection system free from the zero point return operations is provided.

# 1.2 S10 SERIES SERVO SYSTEM TABLE

## System structure

| System | | Com-mand | System structural drawing | System type/System performance | Axis specifi-cation | Unit format: Servo amplifier | Unit format: Option card | Unit format: Motor shaft end detector | Unit format: Machine end /ball screw end detector | Cable name: Amplifier–motor shaft end detector cable | Cable name: Amplifier–motor shaft end detector–machine end detector cable |
|---|---|---|---|---|---|---|---|---|---|---|---|
| Absolute position detection | Incremental detection | 1 micron | | Standard type<br>• Maximum follow-up performance: 1 Mpps<br>• Minimum resolution : 0.018°/p (Motor shaft end)<br>• Maximum speed : 3000 rpms<br>The maximum speed depends on the motor being used. | 1-axis | MR-S11-□-E01 | - | OSE5K-6-17-108 (OSE5K) | - | CN2K○ Actuator L ≤ 7.5m–N541C583 L > 7.5m–N541C582 | - |
| | | | | | 2-axis | MR-S12-□-E01 | - | | | | |
| | | Subm-icron | | High accuracy type<br>• Maximum follow-up performance: 2 Mpps<br>• Minimum resolution : 0.0036°/p (Motor shaft end)<br>• Maximum speed : 2400 rpm | 1-axis | MR-S11-□-E33 | RF-33 | OWR25K-1X-3-8-108 (OWR25K-1X) | - | CN33K○ L ≤ 20m–N541C616 | - |
| | | | | | 2-axis | MR-S12-□-E33 | RF-332 | | | | |
| | Semi-closed loop | 1 micron | | Ball screw end detection type<br>• Maximum follow-up performance: 1 Mpps (Ball screw end)<br>• Minimum resolution : 0.018°/p (Ball screw end)<br>• Maximum speed : 3000 rpm (Ball screw end)<br>The maximum speed depends on the motor being used. | 1-axis | MR-S11-□-E31 | RF-31 | OSE5K-6-12-108 (OSE5K) | OSE5KN-KT□-3-9.52-0 Connector direction | CN2K○ | CN31RN○ |
| | | | | | 2-axis | MR-S12-□-E31 | RF-312 | | | | |
| | | Subm-icron | | Scale F/B type<br>• Maximum follow-up performance: 1 Mpps<br>• Minimum resolution : 1μm or 0.5μm<br>• Maximum speed : 3000 rpm<br>System performance depends on the motor and scale being used. | 1-axis | MR-S11-□-E31 | RF-31 | OSE5K-6-12-108 (OSE5K) | Various scales of pulse F/B outputs of 1μ and 0.5μ specification can be connected. | CN2K○ | CN31HO/HO |
| | | | | | 2-axis | MR-S12-□-E31 | RF-312 | | | | |
| | | | | High accuracy scale F/B type<br>• Maximum follow-up performance: 2 Mpps<br>• Minimum resolution : 0.1μm<br>• Maximum speed : 2400 rpm<br>System performance depends on the scale being used. | 1-axis | MR-S11-□-E33 | RF-33 | OAER25K-1X-3-8-108 (OWR25K-1X) | Various scales of pulse F/B outputs in 0.1μ specification can be connected. | CN33NO | CN31NO |
| | | | | | 2-axis | MR-S12-□-E33 | RF-332 | | | | |
| | Closed loop | 1 micron | | Absolute position detection type<br>• Maximum follow-up performance: 1 Mpps<br>• Minimum resolution (Motor shaft end) : 0.018°/p<br>• Maximum speed : 3000 rpm<br>The maximum speed depends on the motor being used. | 1-axis | MR-S11-□-Z33 | RF-33 | OAER5K-1X-3-8-108 (OWR25K-1X) | - | CN33KO | - |
| | | | | | 2-axis | MR-S12-□-Z33 | RF-332 | | | | |
| | | 1 micron | | Absolute position ball screw end detection type<br>• Maximum follow-up performance: 1 Mpps (Ball screw end)<br>• Minimum resolution (Ball screw end) : 0.018°/p<br>• Maximum speed : 3000 rpm (Ball screw end)<br>The maximum speed depends on the motor being used. | 1-axis | MR-S11-□-Z33 | RF-33 | OSE5K-6-12-108 (OSE5K) | OAER5K-1X-ET□-3-9.52-0 Connector direction | CN2K○ | CN33R |
| | | | | | 2-axis | MR-S12-□-Z33 | RF-332 | | | | |

Note (1) : System structural drawing above repreeents the one axis type.
(2) : In a two-axis system, when the required option cards are same systems, systems can be combined freely for each axis.
In addition, the standard system can be combined with any system.

# 1.3 MR-S12 SERVO SYSTEM FUNCTIONAL BLOCK DIAGRAM

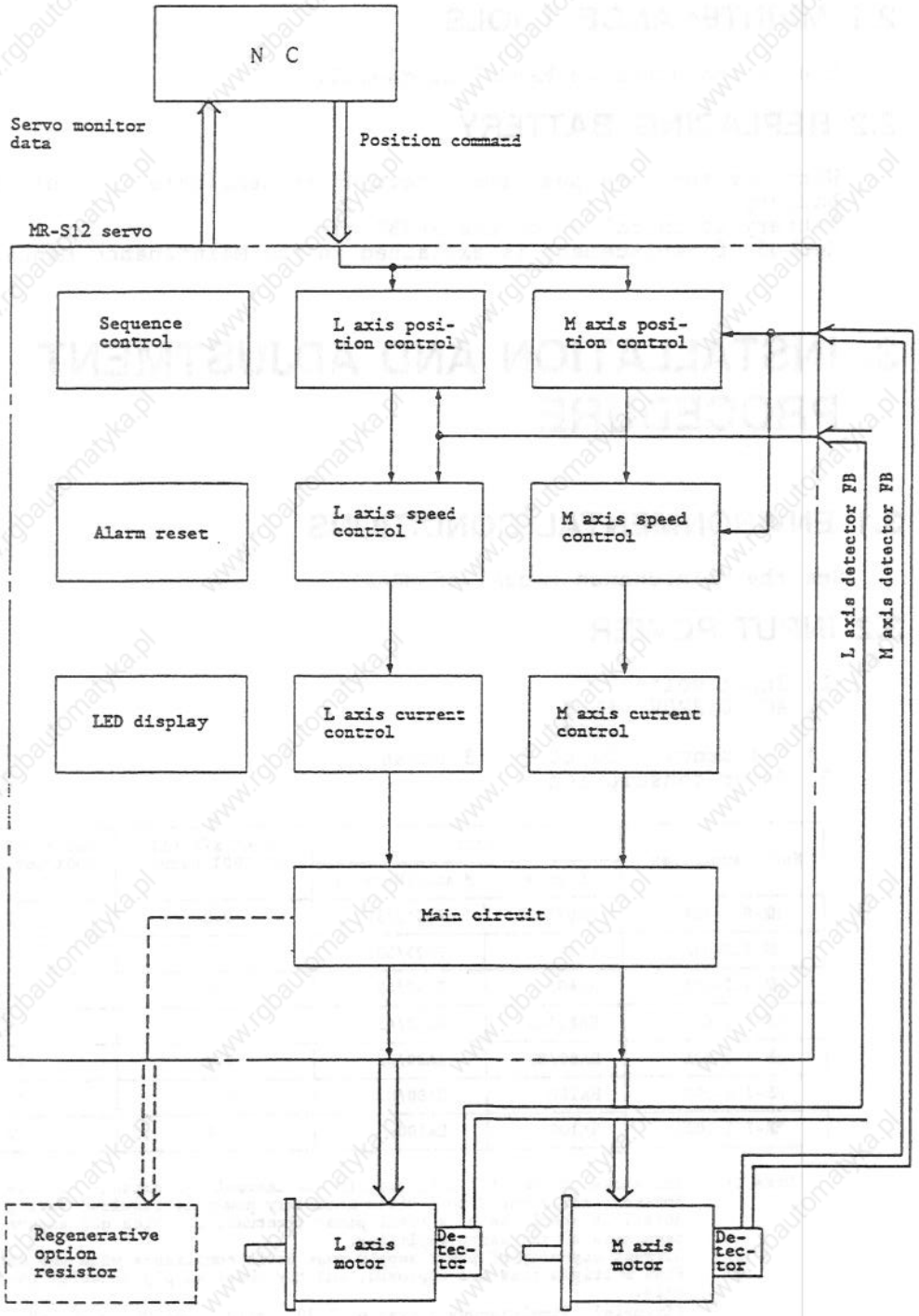

# 2. DAILY MAINTENANCE

## 2.1 MAINTENANCE TOOLS

See the Maintenance Manual of MR-S11.

## 2.2 REPLACING BATTERY

With the absolute position detection system, data are retained using the battery.
Battery is installed on the RF332 card.
Method of replacement is explained in the Maintenance Manual of MR-S11.

# 3. INSTALLATION AND ADJUSTMENT PROCEDURE

## 3.1 ENVIRONMENTAL CONDITIONS

See the Maintenance Manual of MR-S11.

## 3.2 INPUT POWER

(1) Input voltage
AC200/220V +10%
-15%
(2) Frequency: 50/60 Hz, 3 phase
(3) Power consumption

| Servo amplifier | Motor | | Input kVA (1) at 100% output | Input A(2) at 170V, 100% output |
|---|---|---|---|---|
| | L axis | M axis(Note 1) | | |
| MR-S12-13A | HA053/13 | HA053/13 | 0.8 | 2.8 |
| MR-S12-33A | HA23/33 | HA23/33 | 1.2 | 4.2 |
| MR-S12-40A | HA40/43 | HA40/43 | 2.0 | 7.0 |
| MR-S12-80B | HA80/43 | HA40/43 | 2.6 | 9.1 |
| MR-S12-80A | HA80/83 | HA80/83 | 3.2 | 11 |
| MR-S12-100B | HA100 | HA80/83 | 4.3 | 15 |
| MR-S12-100A | HA100 | HA100 | 5.4 | 19 |

Note 1) The above table (1) will satisfy the thermal kVA capacity at the power supply. However, since the 2 to 3 times momentary power is required during acceleration of the motor, it should be of a small power fluctuation, which can ensure 170V to 242V at the terminals of the servo amplifier.
2) Current capacity of power supply must be in compliance with the above table (2).
3) When multiple axes are employed, add the power supply capacity per each additional axis.
[Example] Simultaneous 3 axes of HA80 + HA100 + HA300 → 10.2kVA 34.6A
For the selection of no-fuse breaker, refer to the explanation of specifications.
4) Input transformer
When the power supply voltage does not meet the above specifications, use the power supply transformer at the input side.

# 3.3 MAIN CIRCUIT DIAGRAM

## 3.3.1 EXTERNAL CONNECTION TERMINALS

TE1

| Terminal symbol | Application | Remarks |
|---|---|---|
| B | External emergency stop | Normal B-R short-circuit |
| R | Input AC200/220V 50/60Hz | |
| S | | |
| T | | |
| LU | L axis motor wiring (U phase) | |
| LV | L axis motor wiring (V phase) | |
| LW | L axis motor wiring (W phase) | |
| MU | M axis motor wiring (U phase) | |
| MV | M axis motor wiring (V phase) | |
| MW | M axis motor wiring (W phase) | |

(G) ground is for grounding of the housing.

TE2

| Terminal symbol | Normal | With regeneration unit |
|---|---|---|
| C | No connection | Regeneration unit connected. |
| D | Shortcircuit on the short bar | No connection |
| P | | Regeneration unit connected. |

TE3

| Terminal symbol | Application | Remarks |
|---|---|---|
| LG1 | For connection of L axis Clixon thermal terminal 1 | |
| LG2 | For connection of L axis motor Clixon thermal terminal 2 | |
| MG1 | For connection of M axis motor Clixon thermal terminal 1 | |
| MG2 | For connection of M axis motor Clixon thermal terminal 2 | |
| EM1 | Contactor connection terminal for external brake | Contactor on with servo On. |
| EM2 | Contactor connection terminal for external brake | |

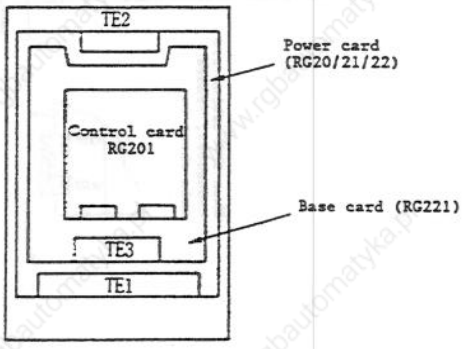

## 3.3.2 CONNECTION DIAGRAM

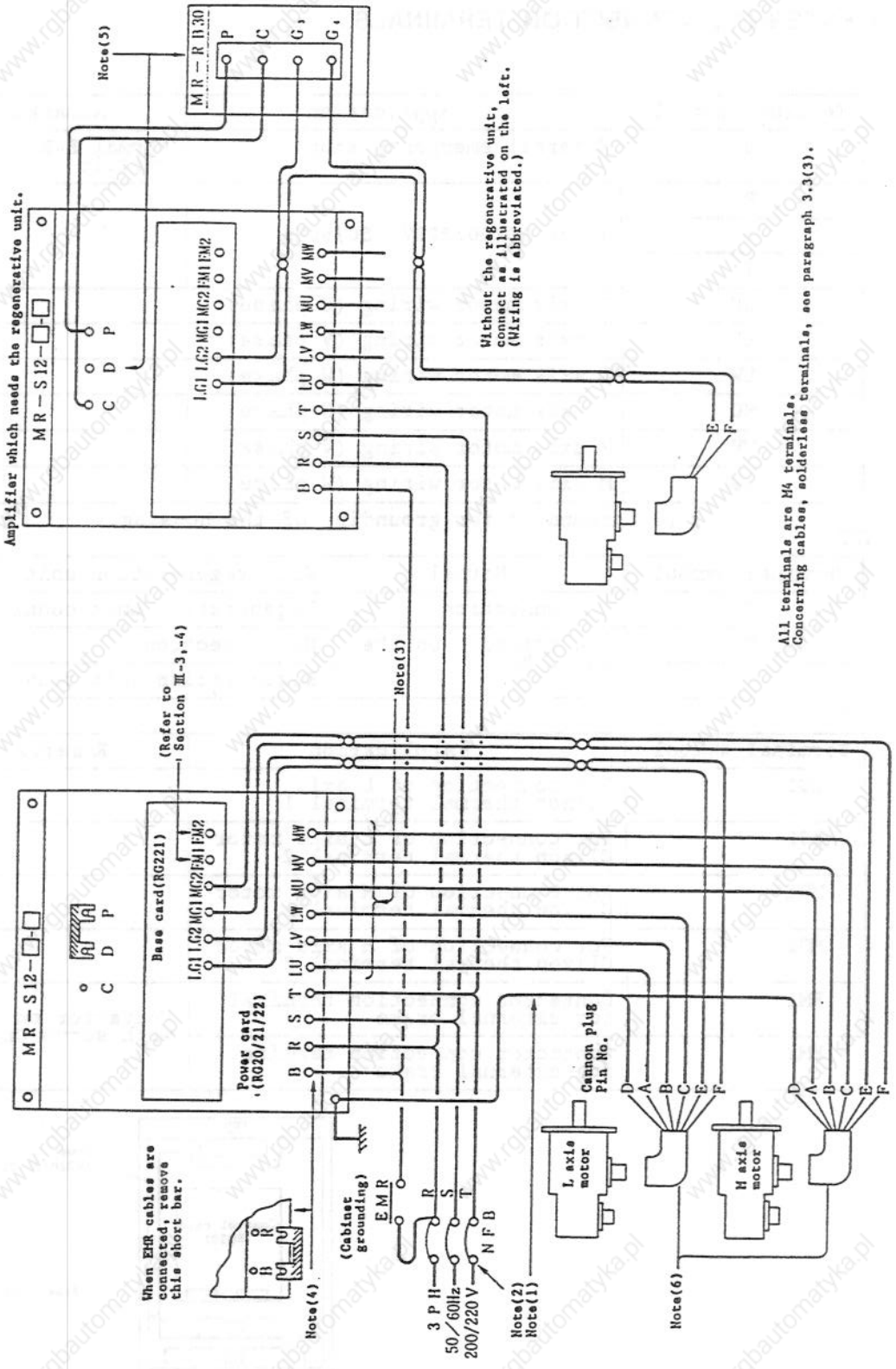

Note (1) The servo amplifier is 200 V. As long as the power supply specification is satisfied, the power transformer is not required. When a 400 V or higher is used, use a voltage drop transformer.
Since the main circuit does not use a transformer, ground it.
The above figure does not show a transformer with an overseas specification.

(2) The phase order of the power terminals R, S, and T of the servo amplifier is freely assigned. However, when many axes are used, different symbol cables should not be connected.

(3) Precautions for connecting servo amplifier terminals U, V, and W.

a. The relationship between the phase order of the servo amplifier terminals U, V, and W and the motor pins A, B, and C should be maintained.
If the phase order is incorrect, the motor may vibrate or rotate abruptly.
The motor cannot be rotated in reverse by changing the phase order.

b. Power should not be applied to the output terminals U, V, and W of the servo amplifier. Avoid connecting the cables in a way that the output terminals U, V, and W of the servo amplifier could be mistakenly grounded. Such a mistake may damage the servo amplifier.

(4) The terminals B and R of the servo amplifier are connected with a short wire. When EMR (emergency stop) cables are connected, remove this short wire. When the EMR contacts are open, the servo is accurately emergency-stopped.

(5) The terminals D and C of the servo amplifier are connected with a short wire. When the regeneration option is used, remove the short bar and connect it as shown in the following figure (see paragraph 3.4).
Since the regeneration option generates heat, avoid causing a fire in the surrounding portion and the connection cables.

(6) MR-S11-700 and MR-S11-900 are not provided with terminal D. The regeneration resistor should be mounted separately.
Connect the regeneration resistor between the terminals C and P. For the specification of the regeneration resistor, see paragraph 3.4. Since the regeneration option generates heat, avoid firing the surrounding portion and the connection cables.

(7) The type of Cannon connector to be used depends on the motor.
For details, see 3.3.2.

(8) The position of each terminal on the servo amplifier depends on the large capacity type and small capacity type. For the terminal positions, see the Specification Manual.
Obey the precautions in paragraphs 3.5 and 3.6.

(9) For the selection of the non-fuse breaker, see the Specification Manual.

When terminal B of the servo amplifier is connected to the EMR contact, the emergency stop is structured in two different systems (alarm codes 55 and E7).
The current which flows during the EMR contact is approx. 30 mA per axis at 200 V, 60 Hz.
Even if the EMR contacts are open again after the emergency stop takes place, unless the reset operation is performed from NC, the emergency stop cannot be reset.

## 3.3.3 CONNECTING MOTOR

MR-S12 is classified into the following 5 types depending on the capacity and motors have some limitations respectively for L and M axes.

| Type of amplifier | L axis drive motor | M axis drive motor |
|---|---|---|
| MR-S12-13A- □ | HA053/13 | HA053/13 |
| MR-S12-33A- □ | HA23/33 | HA23/33 |
| MR-S12-40A- □ | HA40/43 | HA40/43 |
| MR-S12-80B- □ | HA80/83 | HA40/43 |
| MR-S12-80A- □ | HA80/83 | HA80/83 |
| MR-S12-100B- □ | HA100 | HA80/83 |
| MR-S12-100A- □ | HA100 | HA100 |

(1) The L axis motor always has a larger capacity than the M axis motor. For example, MR-S12-80B- □ means the amplifier for L axis corresponding to HA80 and "B" suffixed to 80 indicates the amplifier having M axis is 1 rank below L axis, i.e. corresponding to HA40. In the same manner, MR-S12-80A- □ having suffix "A" means that the amplifier corresponds to HA80, the same as the L axis.

MR-S12- □ □

- Alphabet A, B ... Indicates the capacity of the M axis.
  - A: The same capacity as the L axis
  - B: 1 rank below the L axis
- Arabic numeral .. Indicates the capacity of the L axis. Corresponds to HA**.

(2) When MR-S12-80B- □ is used, if HA40 motor is used on L axis and HA80 on M axis by mistake, there is the danger that HA40 on L axis is demagnetized.

(3) Feedback connector of the L axis motor is LCN2 (semi-closed) and MCN2 (semi-closed) for the M axis motor.

(4) Typical examples of wrong wiring are shown on the next page.

Examples of wrong wiring

(1) Do not connect a motor of smaller capacity to the L axis.

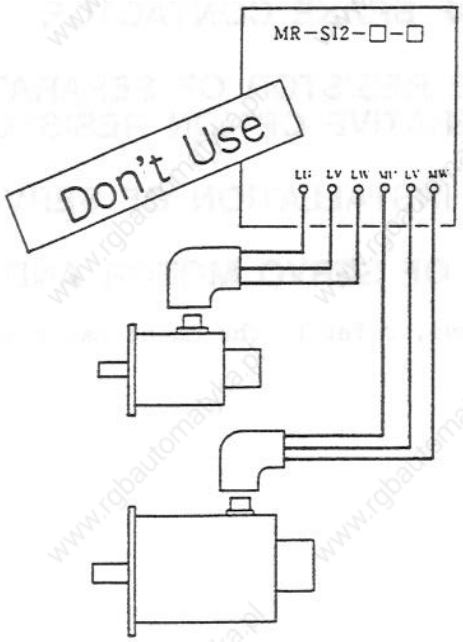


(2) Do not misconnect UVW phases terminals and L, M of detector cables.

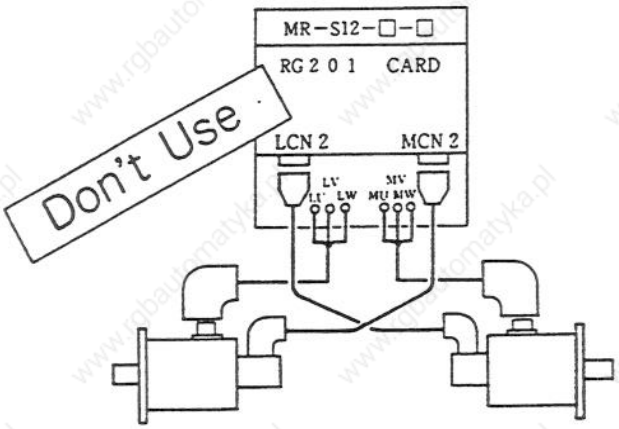

### 3.3.4 MOTOR WIRE CONNECTION

(1) Cannon plug
(2) Motor with terminal box
(3) Wires and cables

## 3.4 UTILIZATION OF BRAKE CONTACTOR

## 3.5 REGENERATIVE RESISTOR OF SEPARATE INSTALLATION TYPE (REGENERATIVE OPTION RESISTOR)

## 3.6 CAUTION FOR INSTALLATION OF SERVO AMPLIFIER

## 3.7 INSTALLATION OF SERVO MOTOR AND DETECTOR

Concerning the above, refer to the Maintenance Manual of MR-S11 servo amplifier.

## 3.8 PRECAUTIONS FOR POWER ON AFTER INSTALLATION

(1) Before power ON
After the main circuit cables and required cables have been connected, but before turning on the power, check the following items.

1) Check that the 3Ø 200/220 VAC has been connected to the terminals R, S, and T of the terminal block.

2) Check that the motor power cable has been connected to the terminals U, V, and W of the terminal.

3) When a regeneration option resistor has not been used, check to see if the terminals C and P of the terminal block (upper section) have been short-circuited.
When the regeneration option resistor has been connected, check that it has been connected to the terminals C and P of the terminal block (upper section).
When the regeneration option resistor has been connected, check that the terminals D and P of the terminal block are not short-circuited (upper section).

4) Check that the cable from NC or from CN1B of another axis has been connected to CN1A. Check that the cable from CN1A or the cable end (termination connector) has been connected to CN1B.

5) Check that the cable from the detector has been connected to RG101 or RF31/33. (For the correct connection method, see Appendix 2, "Cable Connection Drawing."

6) Check that the RG101 card has been correctly mounted on the unit. (Check that the projected parts from the small holes of CON1 and CON2 are aligned with their top planes.
(For the correct connection method, see Appendix 2, "Cable Schematic Diagram.")

7) Check that CS1 (axis number setting) of the RG101 card has been correctly set. (For the correct setting method, see Appendix 2, "Cable Schematic Diagram.")

8) Check that the RG101 card and RF31/33 cards have been correctly set. (For the correct setting method, see Appendix 2, "Cable Schematic Diagram.")

9) Check that the servo parameters have been correctly set on the NC screen. (For the correct setting method, see Appendix 2, "Cable Schematic Diagram.")

10) When using the motor for the first time and if an abnormality is suspected, before connecting NC and the servo amplifier, turn the NC power on and then decrease the values of ILP and ILN of the servo parameters. This limits the torque of the motor, thereby reducing the degree of an abnormality.

(Example) 13. ILP 1230 → 500
14. ILN -1230 → -500

(2) Caution at the interruption of power supply
1) The main braker, which supplies the power of 3-phase, AC 200/220V to the amplifier, must be shutdown more than 1 second after the cutoff of NC power. With the specifications of absolute value, the control to reduce the battery power consumption is conducted at this moment. (RF332A card excluded)

(3) Check points after the "power ON"

Normal display at 7-segment after the "power on" is shown below. (on RG201 card)

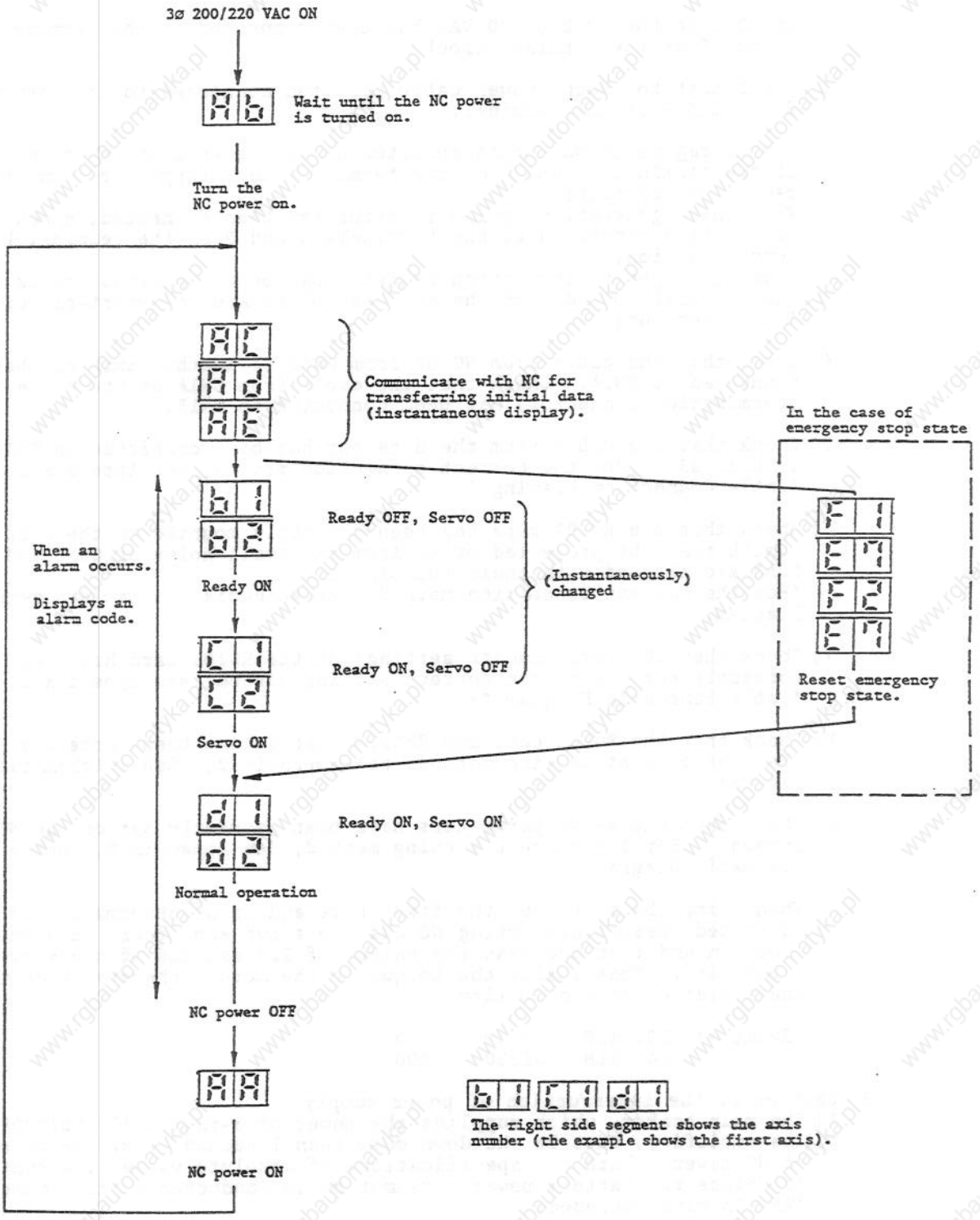

# 4. TROUBLESHOOTING

## 4.1 7-SEGMENT DISPLAY

The amplifier's state is indicated by 7-segment display located at the upper left corner of the amplifier.
When there is any alarm, alarm number is also displayed on the display.

State display of MR-S amplifier

| Display | State | Description |
|---|---|---|
| AA | INITIALIZE | Waiting for the touch up of NC power supply (NC power On → Off) |
| Ab | INITIALIZE | Waiting for the touch up of NC power supply (Amplifier power Off → On and NC power Off) |
| AC | INITIALIZE | Parameter transfer is demanded. |
| Ad | INITIALIZE | Parameter change is demanded. |
| AE | INITIALIZE | Waiting for main servo IT start. |
| | | |
| b♯ | READY OFF | At Ready Off |
| C♯ | SERVO OFF | At servo Off |
| d♯ | SERVO ON | At servo On |
| | | |
| F♯ → E* | WARNING | Warning is given. |
| F♯ → A* | WARNING | Warning is given. |
| F♯ → ** | ALARM | Alarm is given. |
| .. | WATCH DOG ALM | Watch dog alarm |
| FA | NO CONTROL L | L axis off-control (Note 1) |
| Fb | NO CONTROL M | M axis off-control (Note 2) |

(Note 1) If, while the power of the amplifier is turned off, the axis select switch at the top left of RG201 is set to "F" and power to the servo amplifier is turned on, overall control is not conducted on that axis.
(Neither is communication with NC for initializing made nor is the alarm given.)
In a case a shown below, the L axis becomes off-control.

(Example)

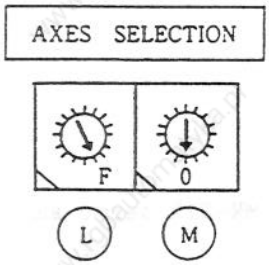


♯ : Axis No.
* : Warning No.
** : Alarm No. (See servo alarm and warning.)

State display after INITIALIZE is indicated orderly as the lighting and extinguishing are repeated for each axis. Some examples are shown below.
(Example 1) When the L axis is assigned to the No.1 axis (X axis) and the M axis to the No.2 axis (Y axis), it is servo On with both axes.

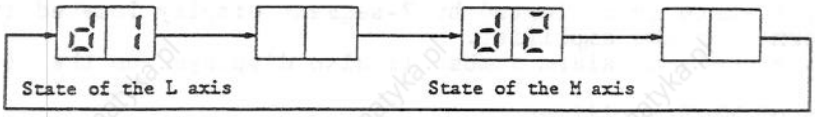


(Example 2) With the above axes designation, the emergency stop signal is input from NC.

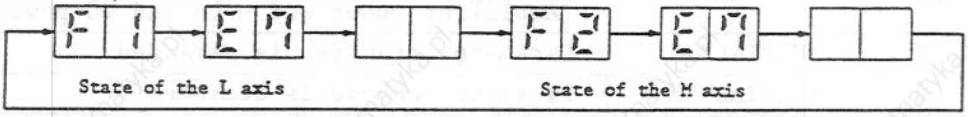


(Example 3) With the above axes designation, when the motor overheat alarm (No.46) is given on the L axis (X axis), the following display will be indicated. (On the M axis (Y axis), the error on the other axis alarm is given.

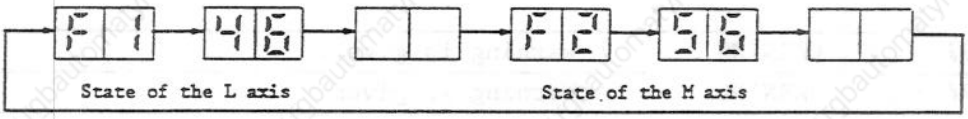


(Example 4) When the AXES SELECTION switch is set to "F" because the L axis is not used, and power is turned on. There is an emergency stop signal input to the M axis from NC.

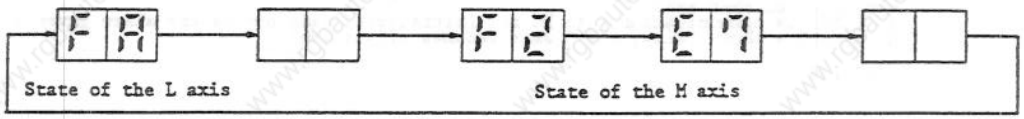


**Servo alarm and caution**

## 4.2 TROUBLESHOOTING

Refter to Maintenance Manual of MR-S11 servo amplifier.

# 5. UNIT REPLACEMENT METHODS

## 5.1 MOUNTING/DISMOUNTING CONTROL PRINTED CIRCUIT BOARD

### 5.1.1 DISMOUNTING CONTROL PRINTED CIRCUIT BOARD

| 1 | Dismounting add-on printed circuit board |
|---|---|
| | 1) Turn Off the power and disconnect the attached connector.<br>Note: When the absolute value detection card is installed, do not disconnect the connector. If this is neglected, the dog type zero return becomes necessary.<br> 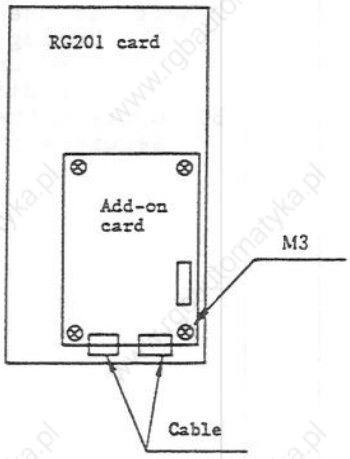 <br><br>2) Remove screws securing the printed circuit board (4 pcs.).<br>3) Remove the combined connector together with the printed circuit board. |
| 2 | Dismounting the main card (RG201) |
| | 1) Turn Off the power and disconnect the attached connector.<br>2) Hold up the printed circuit board to this side while removing the support which holds the printed circuit board.<br>3) Remove the support in the order 1 to 3.<br> 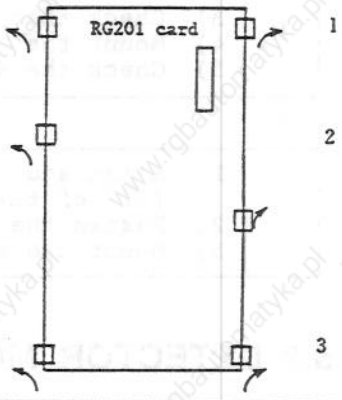 <br> |
| 3 | Dismounting the base amplifier card (RG221) |
| | 1) You will find RG221 after main card RG201 is removed.<br>2) This card can be removed in the same manner as 2.<br>Note: If 2 is omitted and only 3 is conducted, the main card and base card can be removed as a set. |

## 5.1.2 MOUNTING THE CONTROL PRINTED CIRCUIT BOARD

| 1 | Mounting the base amplifier card (RG221) |
|---|---|
| | 1) Insert connectors on the printed circuit board along the guide of the connector on the main circuit side.<br>2) If the connector is inserted, peep through the check hole to see if the lower connector is set close to the hole.<br>Note: If the lower connector is not coming to the check hole, press the connector on the printed circuit board hard.<br>3) Confirm that the supports are securely fixed at 6 points.<br> 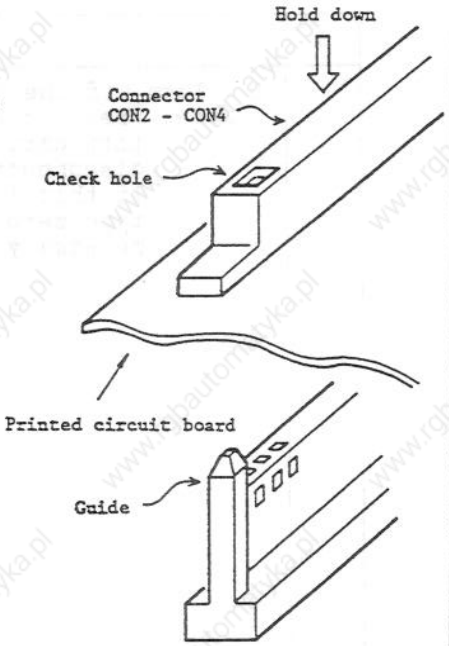 |
| 2 | Mounting the main card (RG201) |
| | 1) Mount CON1 (rear face of card) on RG221 in the manner of engagement.<br>2) When the card is installed, confirm that CON1 is mounted securely.<br>3) Check that the 6 supports are fixed firmly.<br>4) Mount the attached connector.<br>5) Check the setting when the card is replaced. |
| 3 | Mounting the add-on card (RF312/332) |
| | 1) Align and mount the add-on card connector on the connector (J1) of the RG201 card.<br>2) Fasten the 4 mounting screws.<br>3) Mount the attached connector. |

## 5.2 DETECTOR MOUNTING METHOD

Refer to Maintenance Manual of MR-S11 for the detector mounting method.

# 6. HARDWARE CHECK METHODS

## 6.1 FUNCTION OF CARDS

(1) RG201 (Main card)

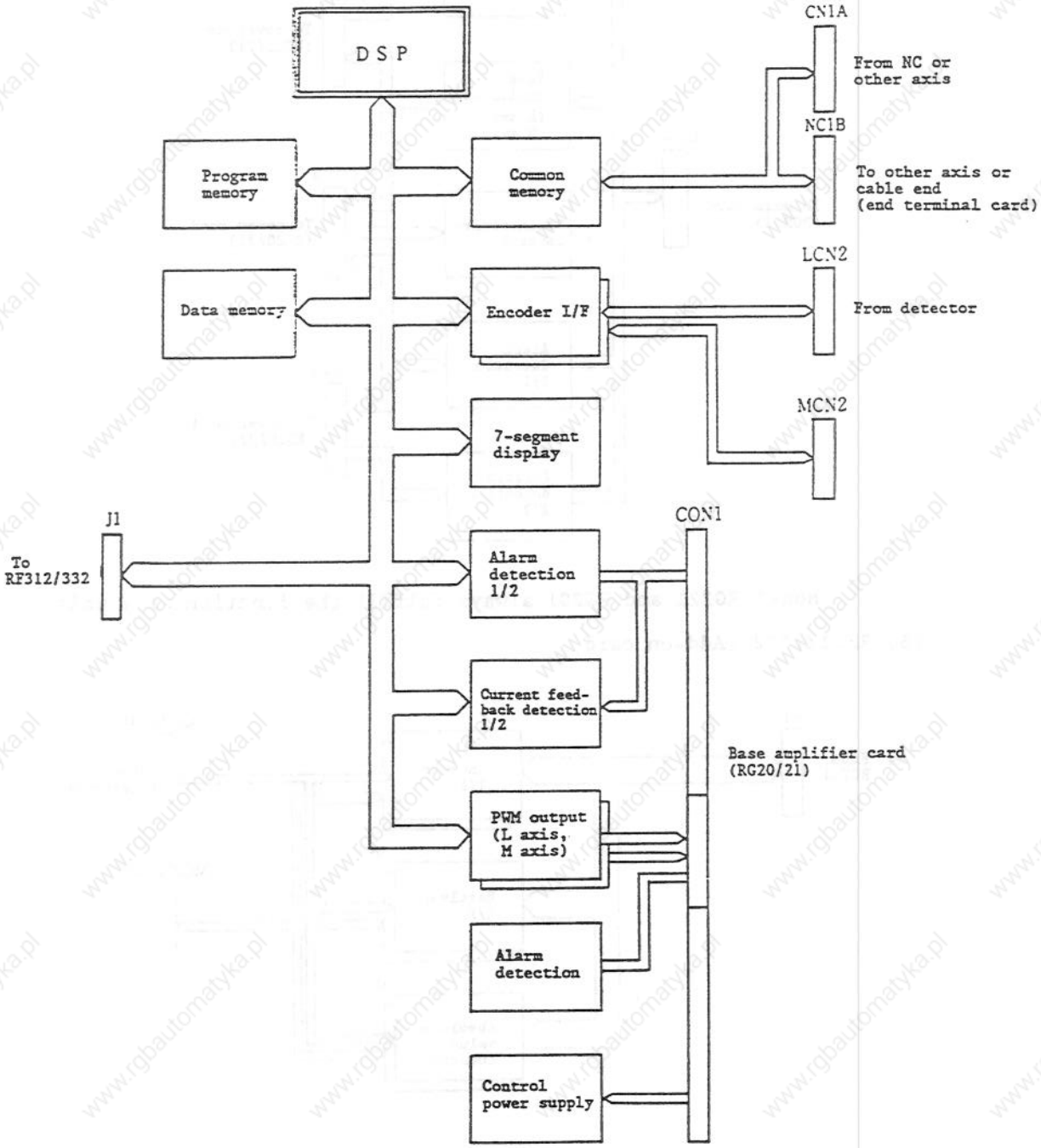

(2) RG221 (Base amplifier card)

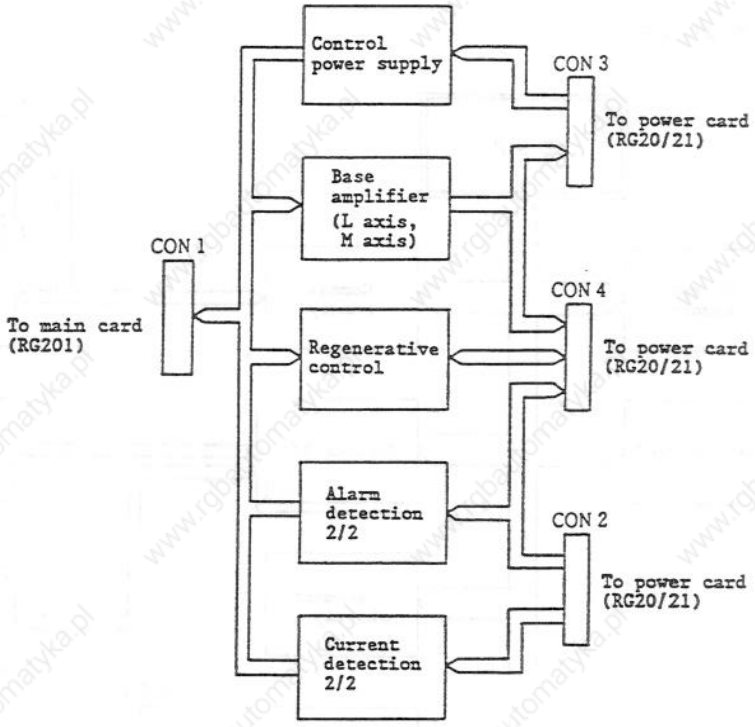


Note) RG221 and RG201 always fulfill the function as a pair.

(3) RF312/332 (Add-on card)

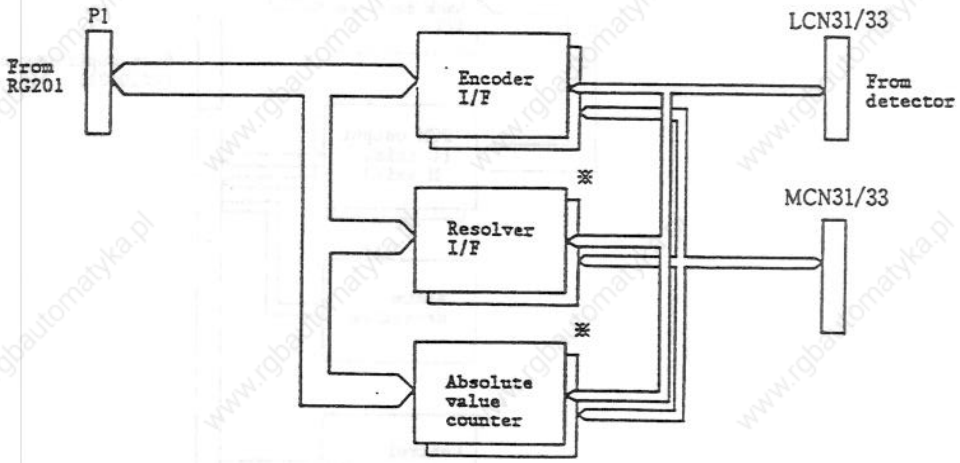


* Not provided on RFS312.

# 6.2 SETTING AND CHECK PIN

RG201 setting method

| | Function | Setting | (Example) |
|---|---|---|---|
| L | L axis for axis number selection | 0 to 5: Axis No., select<br>F: Select on axis not yet being used.<br>6 to E: Cannot use. | No.1 axis...0<br>No.2 axis...1<br>No.3 axis...4 |
| M | M axis for axis number selection | | |

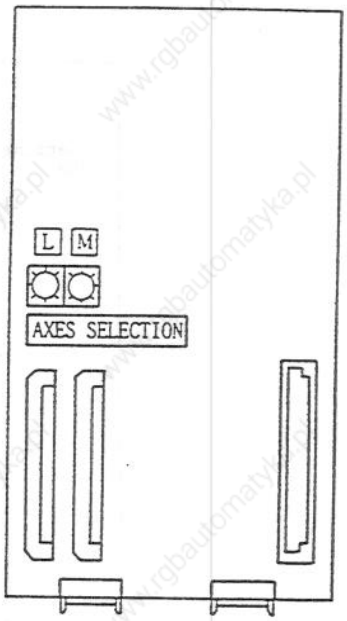


RF312 setting method

Setting is not at all necessary with this card.

RF232 setting method

: Setting ON
: Setting OFF
Figure shows the standard setting.

| Name | Function | Setting | | Standard | Remarks |
|---|---|---|---|---|---|
| | | ON | OFF | | |
| RSYD | Absolute value counter reset | Invalid | Valid | ON | |
| BAC1 | Battery connected | Connected | Disconnected | OFF | Turn On during operation (Note) |
| BAC2 | Battery connected | Connected | Disconnected | OFF | Turn On during operation (Note) |
| 1VR1 | Resolver phase adjust L axis | | | | Do not change because it is adjusted at shipment from the factory. |
| 2VR1 | Resolver phase adjust M axis | | | | Do not change because it is adjusted at shipment from the factory. |

Conduct the setting based on the above table even if it is not used.

(Note) BAC1, 2 are set to Off at the shipment.
Set them to On before power is applied.
If this is neglected, the absolute value cannot be backed up with the battery.

Check pin and waveform

Select the emergency stop before a synchro-probe is attached to the check pin.

(1) RG201

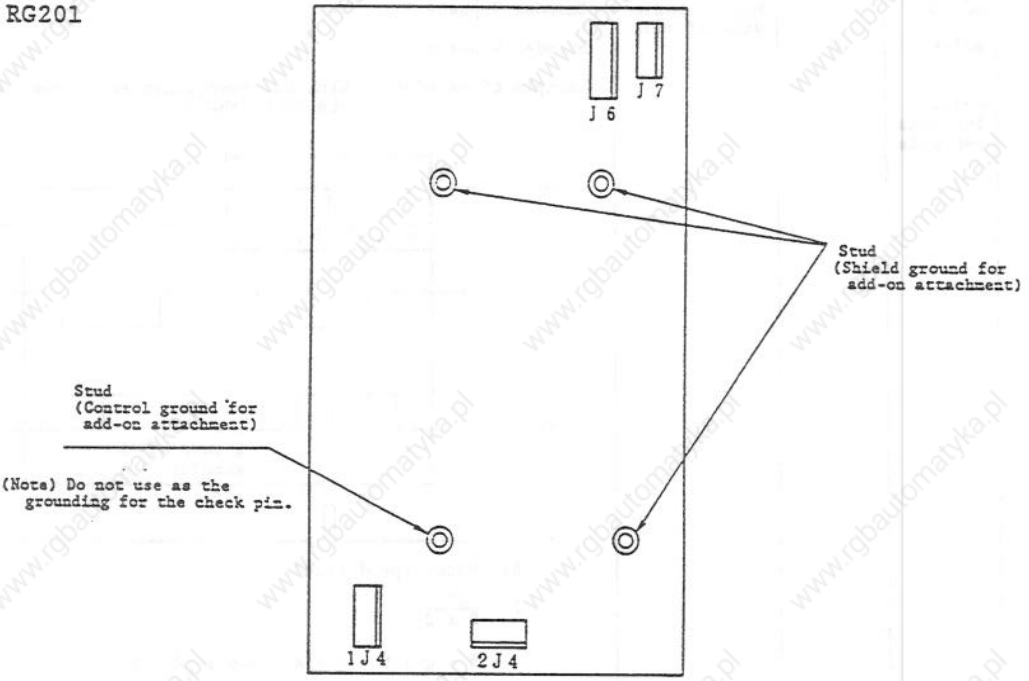


| Terminal name | Signal name | Ground terminal | Signal, description, waveform |
|---|---|---|---|
| nJ4-1<br>nJ4-2<br><br>nJ4-3<br><br><br>n=1,2<br>1=L axis<br>2=M axis | A<br>B<br><br>Z | Right, bottom side of stud | Encoder A phase n = 1 (L axis encoder feedback signal)<br>Encoder B phase n = 2 (M axis encoder feedback signal)<br>Encoder Z phase<br>Example of waveform) With CCW revolution seen from load side on motor shaft<br> 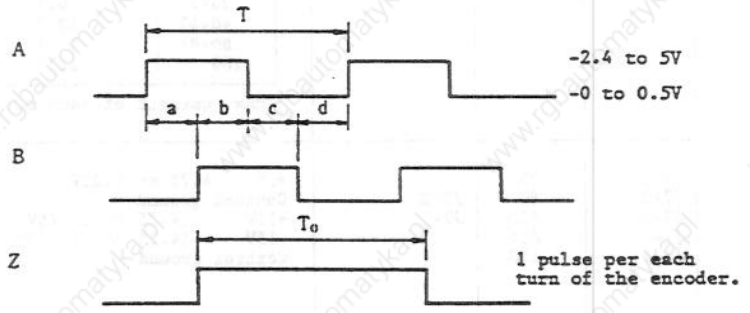 <br>R : Motor speed [rpm]<br>Encoder: OSE5K-6-8-108 (5000p/r)<br>$R = \frac{60}{R \times 5000}$ [sec]<br>$a, b, c, d = \frac{1}{4} T \pm \frac{1}{12} T$<br>T0 = T to 3T |

<table>
<tr><th>Terminal name</th><th>Signal name</th><th>Ground terminal</th><th>Signal, description, waveform</th></tr>
<tr><td>nJ4-4<br>nJ4-5<br><br>nJ4-6<br><br>n=1,2<br>1=L axis<br>2=M axis</td><td>U<br>V<br><br>W</td><td>Right, bottom side of stud</td><td>Encoder U phase<br>Encoder V phase<br><br>Encoder W phase<br><br>Example of waveform) With CCW revolution seen from the load side on the motor shaft<br> 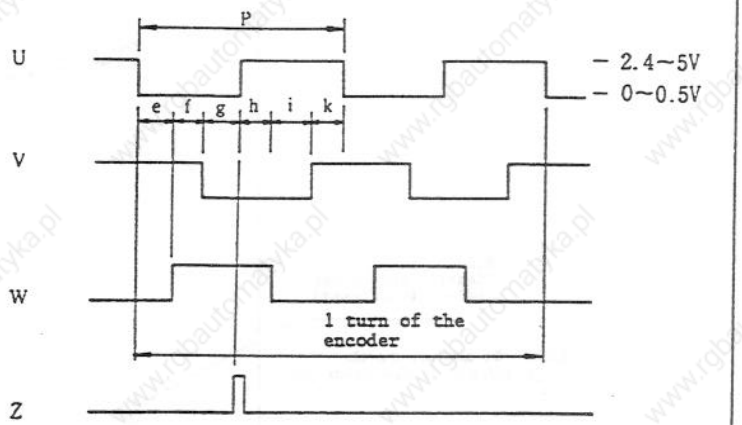 <br><br>R: Motor speed [rpm]<br>$P = \frac{60}{R \times 2}$<br>$e \cdot f \cdot g \cdot h \cdot j \cdot k = \frac{1}{6}p \pm \frac{1}{900}p$</td></tr>
<tr><td>J6-1<br>J6-2<br>J6-3<br>J6-4<br>J6-8</td><td>1U<br>1U<br>2U<br>2V<br>AG</td><td>J6-8</td><td>L axis motor U phase current<br>L axis motor V phase current<br>M axis motor U phase current<br>M axis motor V phase current<br>Analog ground<br> <br><br>Waveform varies depending on the load.<br>(Current shows the peak current.)<br><table><tr><th>Motor</th><th>Current value per 1V</th></tr><tr><td>HA053•13</td><td>2.9 A/V</td></tr><tr><td>23•33</td><td>6.1</td></tr><tr><td>40•43</td><td>12.7</td></tr><tr><td>80•83</td><td>21.2</td></tr><tr><td>100</td><td>31.8</td></tr></table>Max. current of each motor is equivalent to 1.9V.</td></tr>
<tr><td>J7-1<br>J7-2<br>J7-3<br>J7-4<br>J7-6</td><td>P5<br>5G<br>P15<br>N15<br>15G</td><td>J7-2<br>J7-6</td><td>+5V 4.75 to 5.25V<br>Control ground<br>+15V 14.25 to 15.75V<br>-15V -14.25 to -15.75V<br>Control ground</td></tr>
</table>

(2) RF312

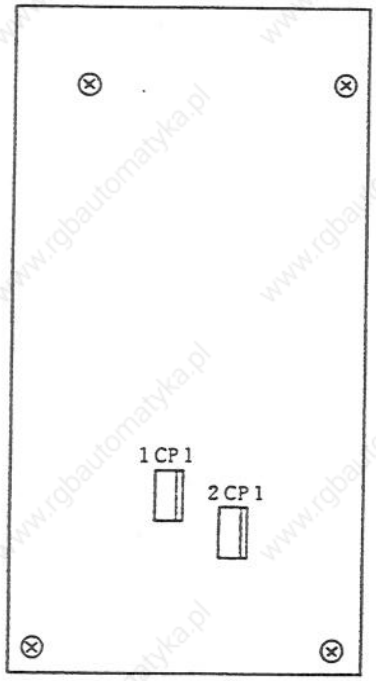

| Terminal name | Signal name | Ground terminal | Signal, description, waveform |
|---|---|---|---|
| nCP-1<br>nCP-2<br><br>nCP-3<br><br><br>n=1,2<br>1=L axis<br>2=M axis | A<br>B<br><br>Z | Right, bottom side of stud | Encoder A phase<br>Encoder B phase<br><br>Encoder Z phase<br><br>Example of waveform) With CCW revolution seen from the shaft side of the detector<br><br> 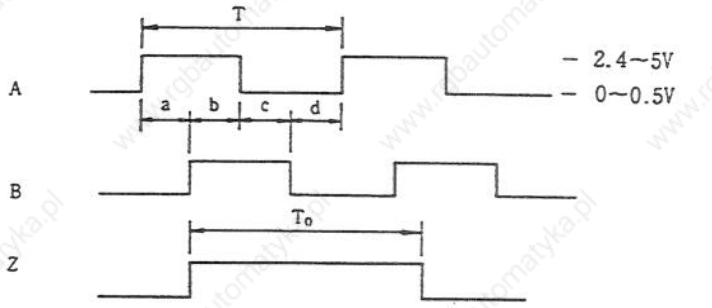 <br><br><br>R : Motor speed [rpm]<br>Encoder: OSE5K-ET (5000p/r)<br><br>$R = \frac{60}{R \times 5000}$ [sec]<br><br>$a, b, c, d = \frac{1}{4}T \pm \frac{1}{12}T$<br><br>T0 = T to 3T |

(3) RF332

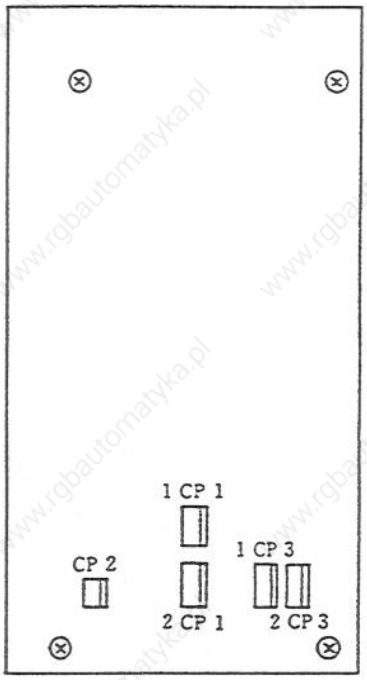

| Terminal name | Signal name | Ground terminal | Signal, description, waveform |
|---|---|---|---|
| nCP1-1<br>nCP1-2<br><br>nCP1-3<br><br><br>n=1,2<br>1=L axis<br>2=M axis | A<br>B<br><br>Z | Right, bottom side of stud | Encoder A phase<br>Encoder B phase<br>Encoder Z phase<br>Example of waveform) With CCW revolution seen from the shaft side of the detector<br> 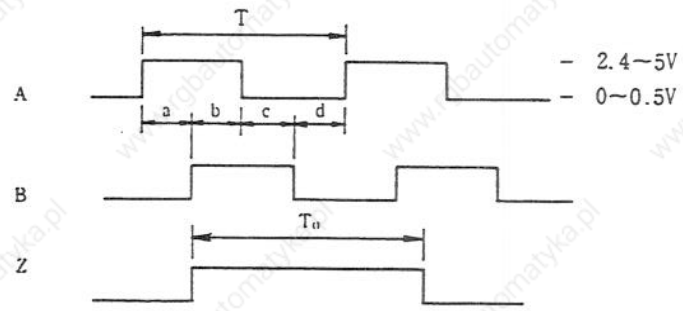 <br>R : Motor speed [rpm]<br>Encoder: OAER-5K-1X(5000p/r)<br>$R = \frac{60}{R \times 5000}$ [sec]<br>$a, b, c, d = \frac{1}{4} T \pm \frac{1}{12} T$<br>T0 = T to 3T |
| CP2-1<br><br>CP2-2<br><br><br>n=1,2<br>1=L axis<br>2=M axis | EX<br><br>15G | CP2-2 | Rectangular wave for resolver excitation<br>Control ground<br>Example of waveform)<br> 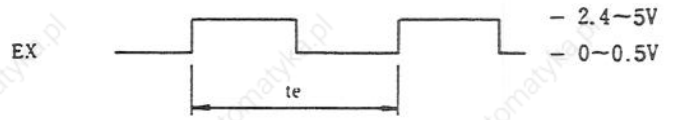 |
| nCP3-1<br><br>n=1,2<br>1=L axis<br>2=M axis | FBL | CP3-3 | Resolver FB level<br>Example of Waveform)<br> 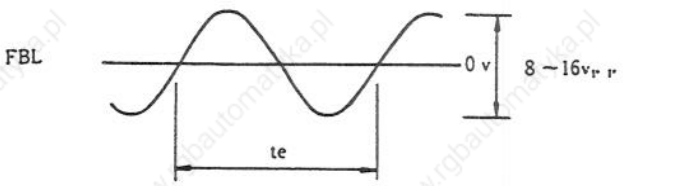 <br>te ≒ 222 μs |
| nCP3-2<br>nCP3-3<br>nCP3-4 | P15<br>15G<br>N15 | CP3-3 | +15V control power supply 14.25 to 15.75<br>Control ground<br>-15V control power supply -14.25 to -15.75 |

# 7. DETAILS OF SERVO PARAMETER

There are 32 servo parameters and the display and setting methods are different for respective NCs. Refer to respective instruction manuals for the details.
For the contents of the parameter, see Maintenance Manual of servo amplifier MR-S11.

# 8. ABSOLUTE POSITION SYSTEM

Concering the absolute position system, refer to Maintenance Manual of MR-S11 servo amplifier.

# APPENDIX

www.rgbautomatyka.pl

# APPENDIX 1 CABLE CONNECTION

## APPENDIX 1.1 CABLE DIAGRAM

Cable diagrams between NC controller, servo amplifier and detector are as illustrated below.
Refer to paragraph 2.2 for the details of cable specifications and to Chapter 3 for the wiring connectin of the main circuit.

(1) Standard type (1 micron, motor shaft end detection)

MR-S11-□-E01 Cable diagram

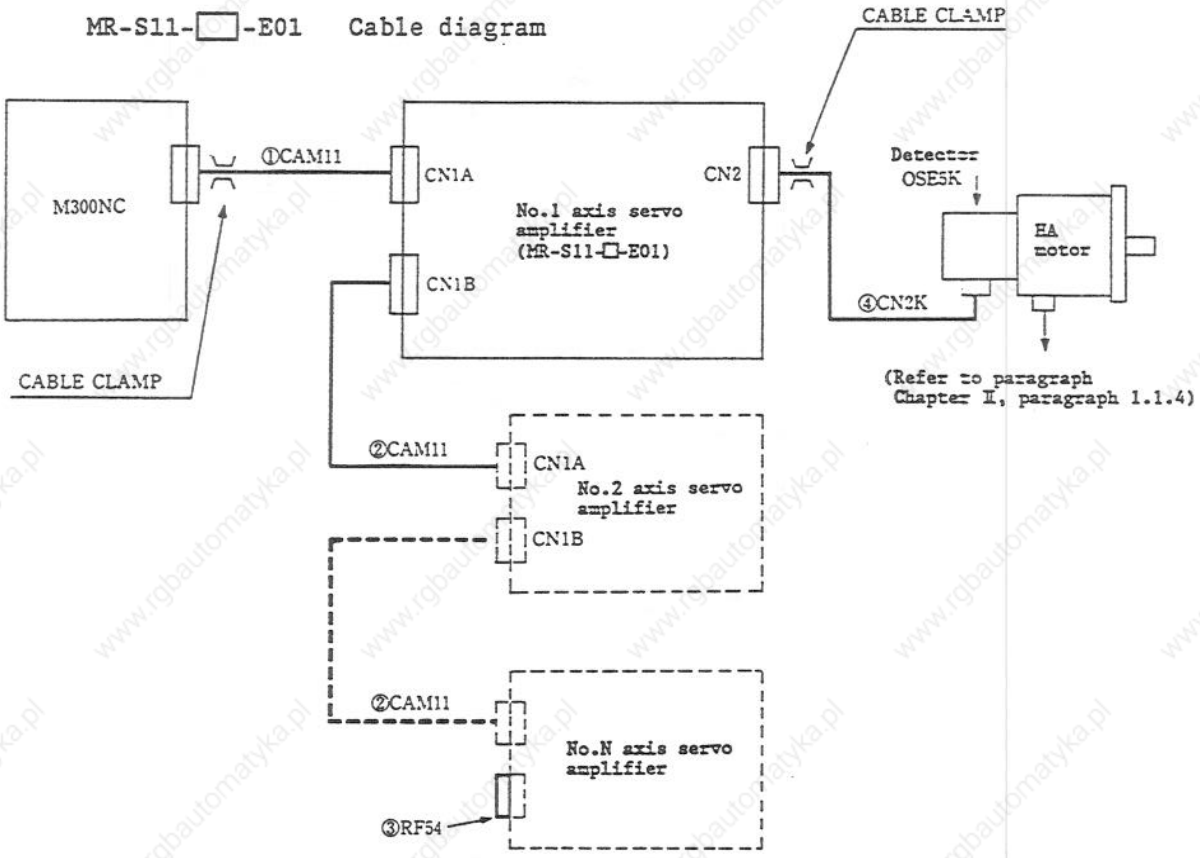


| Part No. | Cable name | Application | Q'ty | Standard length | Max. length | Reference paragraph for specifications |
|---|---|---|---|---|---|---|
| 1 | CAM11 | MCP-AMP or SIF-AMP CABLE | 1 | 5m | 30m overall length | Appendix 2 |
| 2 | CAM11 | AMP-AMP CABLE | N-1 | 0.5m | | |
| 3 | RF54 | CABLE END | 1 | - | - | |
| 4 | CN2K | AMP-ENC CABLE | N-1 | 5m | 50m | |

Note (1) N: Total axes number N ≤ 6. (or N ≤ 4 with M310 NC)
(2) Example of calculation of overall length of parts No. ①, ② cables: With standard length and 6 axes
... 1 x 5 x 5 x 0.5 = 7.5m

(2) High accuracy type (submicron, motor shaft end detection)

MR-S11-□-E33 Cable diagram

Case of high accuracy type No.1 axis is shown.

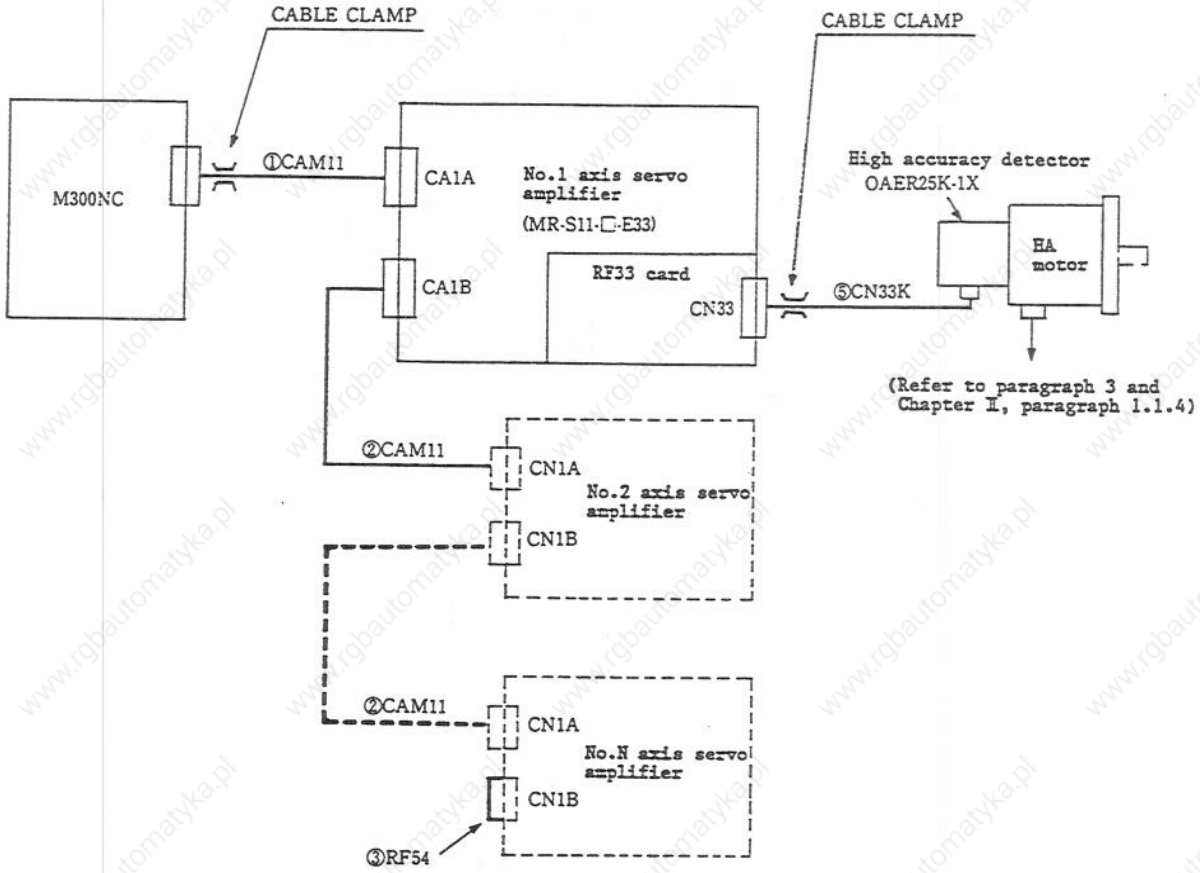


| Part No. | Cable name | Application | Q'ty | Standard length | Max. length | Reference paragraph for specifications |
|---|---|---|---|---|---|---|
| 1 | CAM11 | MCP-AMP CABLE | 1 | 5m | 30m overall length | Appendix 2 |
| 2 | CAM11 | AMP-AMP CABLE | N-1 | 0.5m | | |
| 3 | RF54 | CABLE END | 1 | - | - | |
| 4 | CN2K | AMP-ENC CABLE | N-1 | 5m | 50m | |
| 5 | CN33K | AMP-ENC CABLE | n | 5m | 50m | |

Note (1) N: Total axes number N ≤ 6.
n: Number of axes of high accuracy type
(2) Example of calculation of overall length of parts No. ①, ②
cables: With standard length and 3 axes
... 1 x 5 + 0.5 x 2 = 7m

(3) Ball screw end detection type (1 micron)

MR-S11-□-E31 Cable diagram

Case of ball screw end detection type No.1 axis is shown.

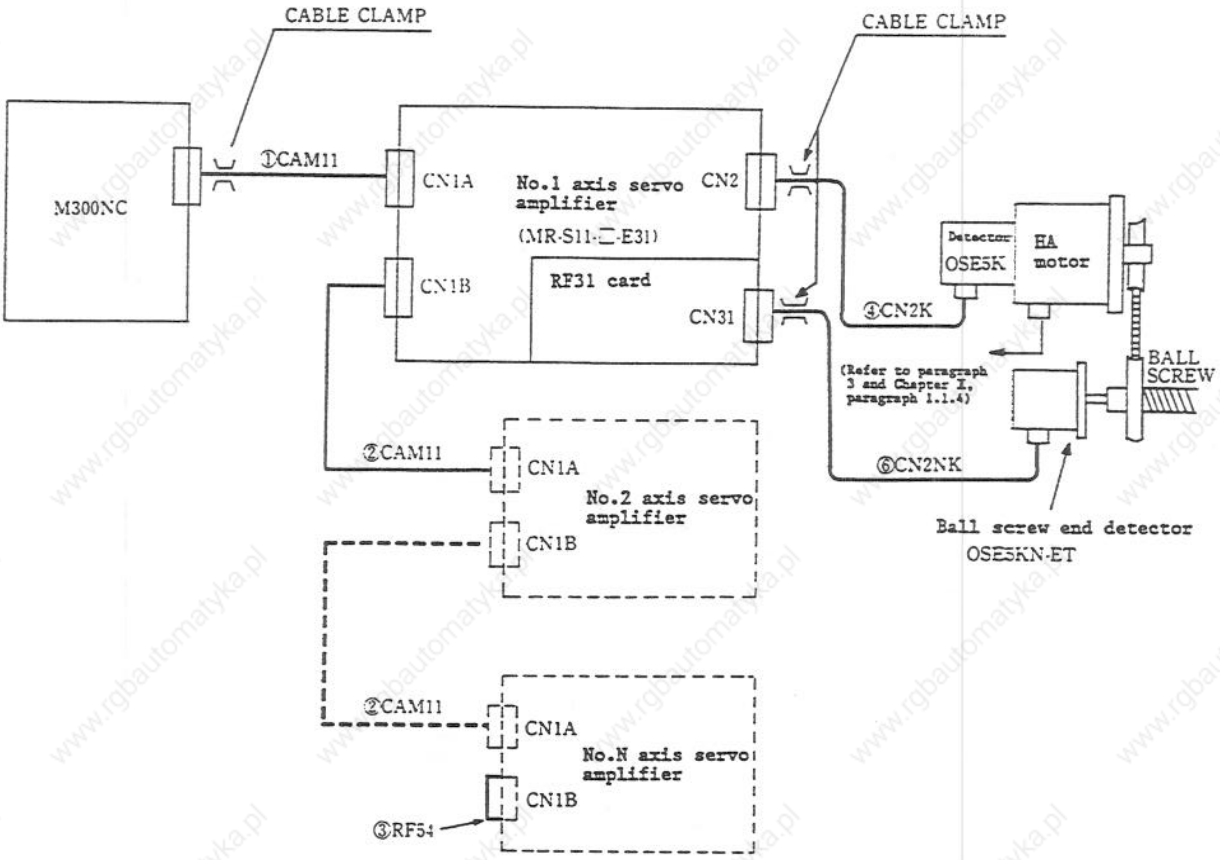


| Part No. | Cable name | Application | Q'ty | Standard length | Max. length | Reference paragraph for specifications |
|---|---|---|---|---|---|---|
| 1 | CAM11 | MCP-AMP CABLE | 1 | 5m | 30m overall length | Appendix 2 |
| 2 | CAM11 | AMP-AMP CABLE | N-1 | 0.5m | | |
| 3 | RF54 | CABLE END | 1 | - | - | |
| 4 | CN2K | AMP-ENC CABLE | N-1 | 5m | 50m | |
| 6 | CN2NK | AMP-ENC CABLE | n | 5m | 50m | |

Note (1) N: Total axes number N ≤ 6.
n: Number of axes of ball screw end detection type.
(2) Example of calculation of overall length of parts No. ①, ②
cables: With standard length and 6 axes
... 1 x 5 x 0.5 x 5 = 7.5m

(4) Scale F/B type (1 micron)

MR-S11-□-E31 Cable diagram

Case of 1 micron scale F/B No.1 axis is shown.

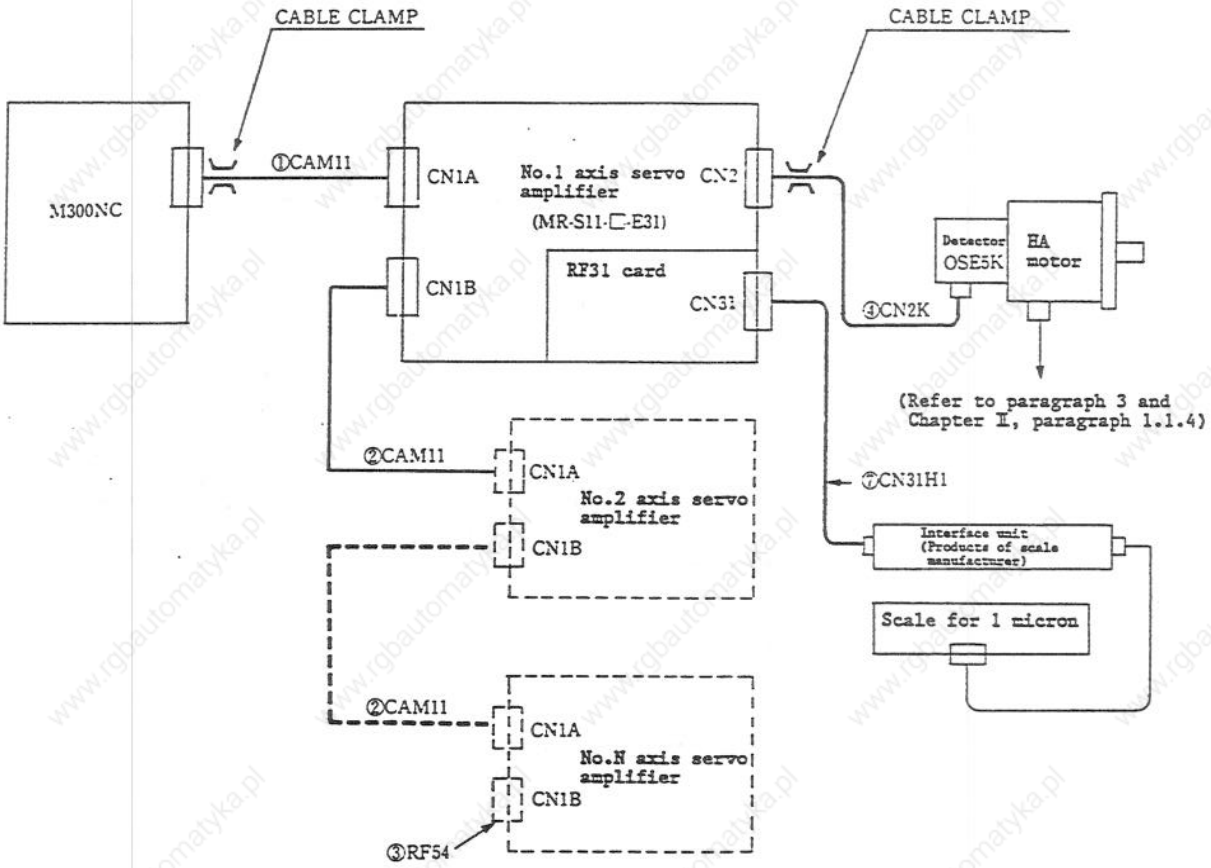


| Part No. | Cable name | Application | Q'ty | Standard length | Max. length | Reference paragraph for specifications |
|---|---|---|---|---|---|---|
| 1 | CAM11 | MCP-AMP CABLE | 1 | 5m | 30m overall length | Appendix 2 |
| 2 | CAM11 | AMP-AMP CABLE | N-1 | 0.5m | | |
| 3 | RF54 | CABLE END | 1 | - | - | |
| 4 | CN2K | AMP-ENC CABLE | N | 5m | 50m | |
| 7 | CN31H | AMP-I/F UNIT CABLE | n | Manufacturer's specifications | Manufacturer's specifications | |

Note (1) N: Total axes number N ≤ 6.
n: Number of axes of scale F/B type.
(2) Example of calculation of overall length of parts No. ①, ② cables: With standard length and 3 axes
... 1 x 5 + 2 x 0.5 = 6m

(5) High accuracy scale F/B type (Submicron)

MR-S11-□-E33 Cable diagram

Case of high accuracy scale F/B No.1 axis is shown.

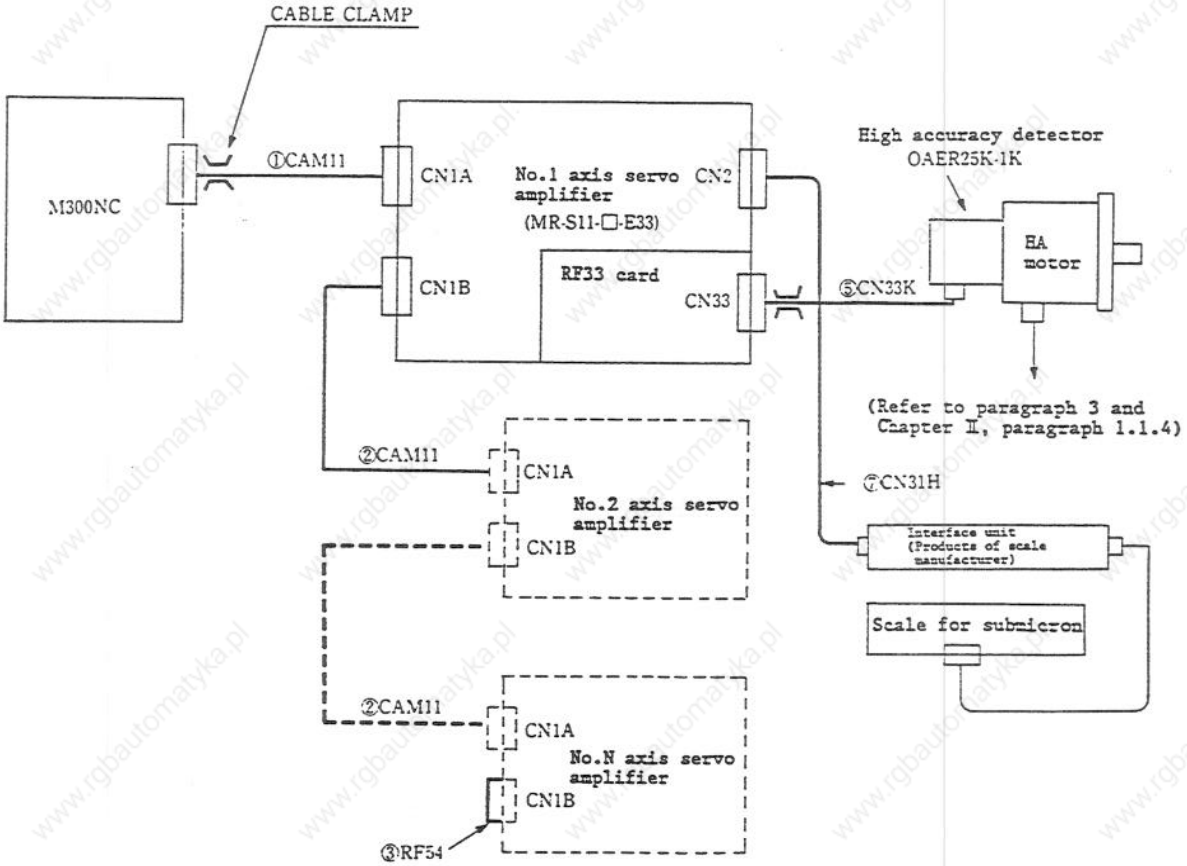


| Part No. | Cable name | Application | Q'ty | Standard length | Max. length | Reference paragraph for specifications |
|---|---|---|---|---|---|---|
| 1 | CAM11 | MCP-AMP CABLE | 1 | 5m | 30m overall length | Appendix 2 |
| 2 | CAM11 | AMP-AMP CABLE | N-1 | 0.5m | | |
| 3 | RF54 | CABLE END | 1 | - | - | |
| 4 | CN2K | AMP-ENC CABLE | N-1 | 5m | 50m | |
| 5 | CN33K | AMP-ENC CABLE | n | 5m | 20m | |
| 7 | CN31H | AMP-I/F UNIT CABLE | n | Manufacturer's specifications | Manufacturer's specifications | |

Note (1) N: Total axes number N ≤ 6.
n: Number of axes of high accuracy scale F/B type.
(2) Example of calculation of overall length of parts No. ①, ② cables: With standard length and 3 axes
... 1 x 5 + 2 x 0.5 = 6m

(6) Inductosyn F/B type (1 micron)

MR-S11-□-E31 Cable diagram

Case of Inductosyn F/B type No.1 axis is shown.

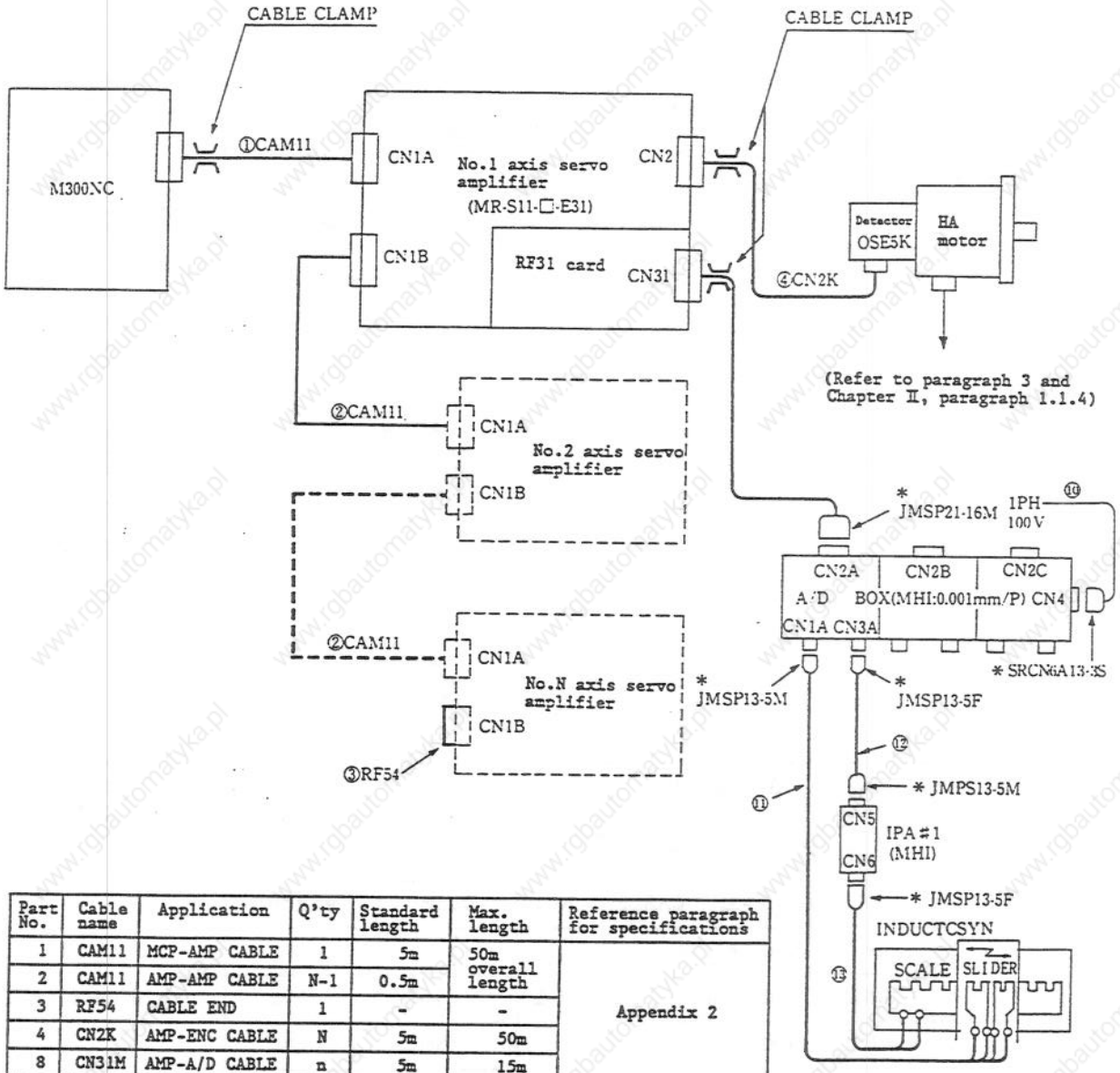


| Part No. | Cable name | Application | Q'ty | Standard length | Max. length | Reference paragraph for specifications |
|---|---|---|---|---|---|---|
| 1 | CAM11 | MCP-AMP CABLE | 1 | 5m | 50m overall length | Appendix 2 |
| 2 | CAM11 | AMP-AMP CABLE | N-1 | 0.5m | | |
| 3 | RF54 | CABLE END | 1 | - | - | |
| 4 | CN2K | AMP-ENC CABLE | N | 5m | 50m | |
| 8 | CN31M | AMP-A/D CABLE | n | 5m | 15m | |
| 10 | A/D POWER CABLE | | 1 | | 20m | Instruction Manual No.I-134 by Mitsubishi Heavy Industory, November 1985 |
| 11 | A/D SLIDER CABLE | | n | | 20m | |
| 12 | A/D LPA CABLE | | n | | 20m | |
| 13 | IPA-SCALE CABLE | | n | | 0.5m | |

Note (1) N: Total axes number N ≤ 6.
n: Number of axes of inductosyn F/B type.

(2) Example of calculation of overall length of parts No. ①, ② cables: With standard length and 3 axes
... 1 x 5 + 0.5 x (N-1) m

(3) Plug with * mark is an accessory of Inductosyn system.

(7) Absolute position detection type (1 micron, motor end detection)

MR-S11-□-Z33 Cable diagram

Case of absolute position detection type No.1 axis is shown.

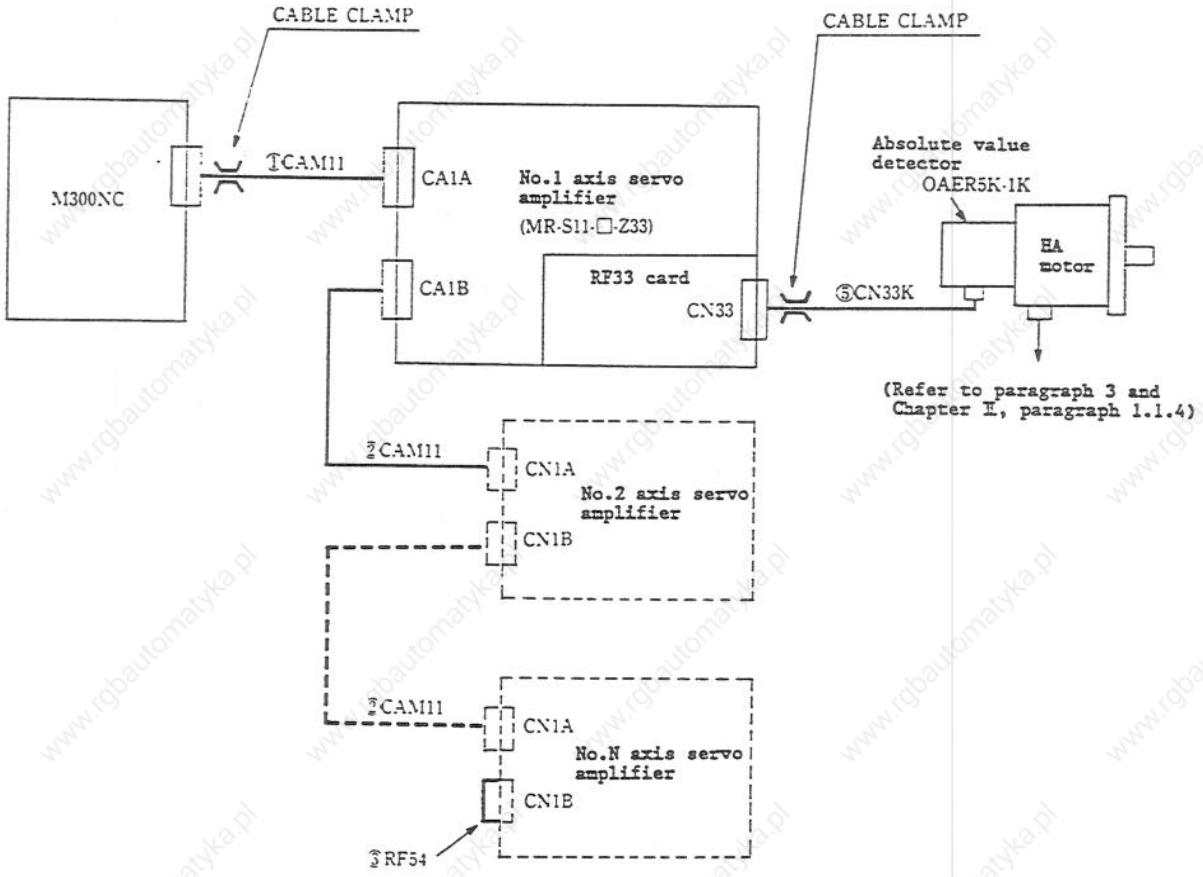


| Part No. | Cable name | Application | Q'ty | Standard length | Max. length | Reference paragraph for specifications |
|---|---|---|---|---|---|---|
| 1 | CAM11 | MCP-AMP CABLE | 1 | 5m | 30m overall length | Appendix 2 |
| 2 | CAM11 | AMP-AMP CABLE | N-1 | 0.5m | | |
| 3 | RF54 | CABLE END | 1 | - | - | |
| 4 | CN2K | AMP-ENC CABLE | N-n | 5m | 50m | |
| 5 | CN33K | AMP-ENC CABLE | n | 5m | 50m | |

Note (1) N: Total axes number N ≤ 6.
(2) Calculation of overall length of parts No. ①, ② cables:
1 x 5 x (N-1) x 0.5 m

(8) Absolute position, ball screw end detection type (1 micron)

MR-S11-□-Z33 Cable diagram

Case of absolute position, ball screw end detection type No.1 axis is shown.

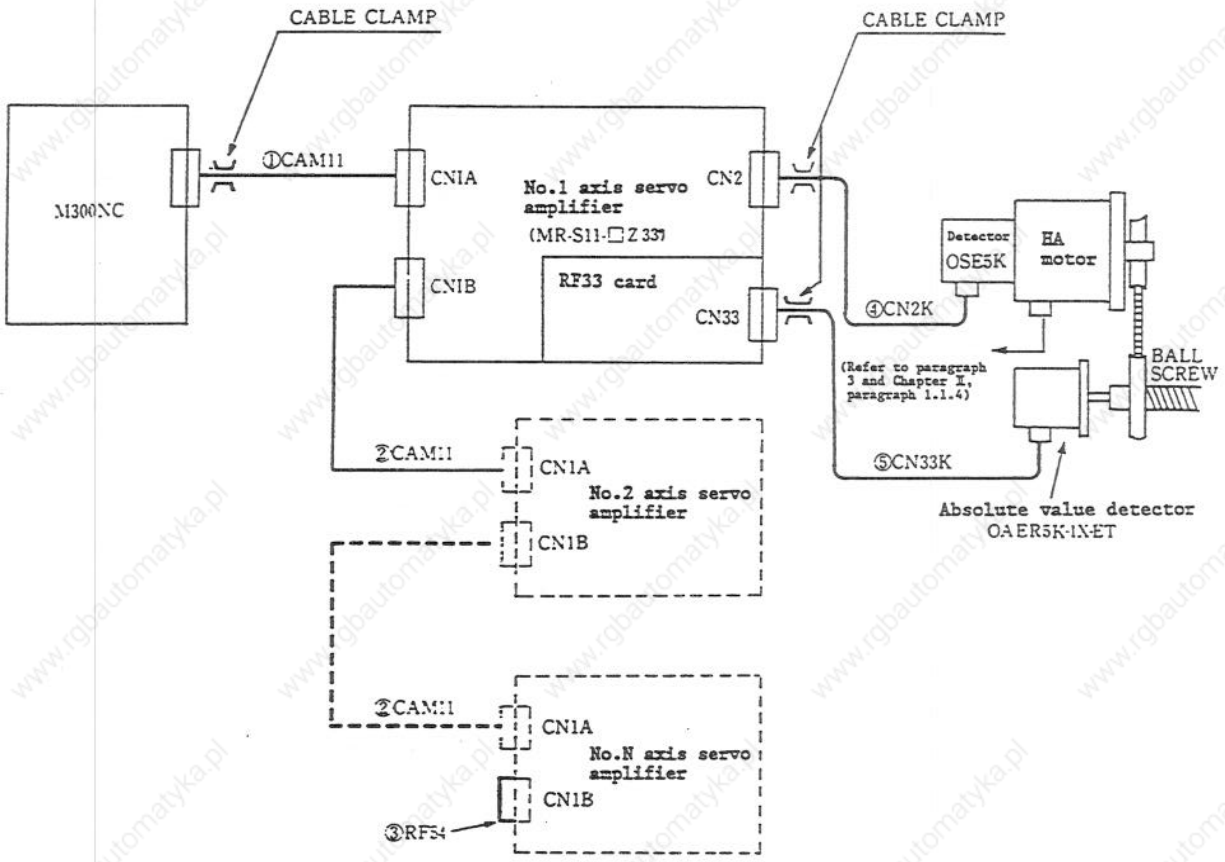


| Part No. | Cable name | Application | Q'ty | Standard length | Max. length | Reference paragraph for specifications |
|---|---|---|---|---|---|---|
| 1 | CAM11 | MCP-AMP CABLE | 1 | 5m | 30m overall length | Appendix 2 |
| 2 | CAM11 | AMP-AMP CABLE | N-1 | 0.5m | | |
| 3 | RF54 | CABLE END | 1 | - | - | |
| 4 | CN2K | AMP-ENC CABLE | N | 5m | 50m | |
| 5 | CN33K | AMP-ENC CABLE | n | 5m | 50m | |

Note (1) N: Total axes number N ≤ 6.
n: Number of axes of absolute position, ball screw end detection type.
(2) Calculation of overall length of parts No. ①, ② cables:
1 x 5 + (N-1) x 0.5 [m]

(9) Standard type (1 micron, motor shaft end detection)

MR-S12-□-E01 Cable diagram

Case of high accuracy type No.1 axis is shown.

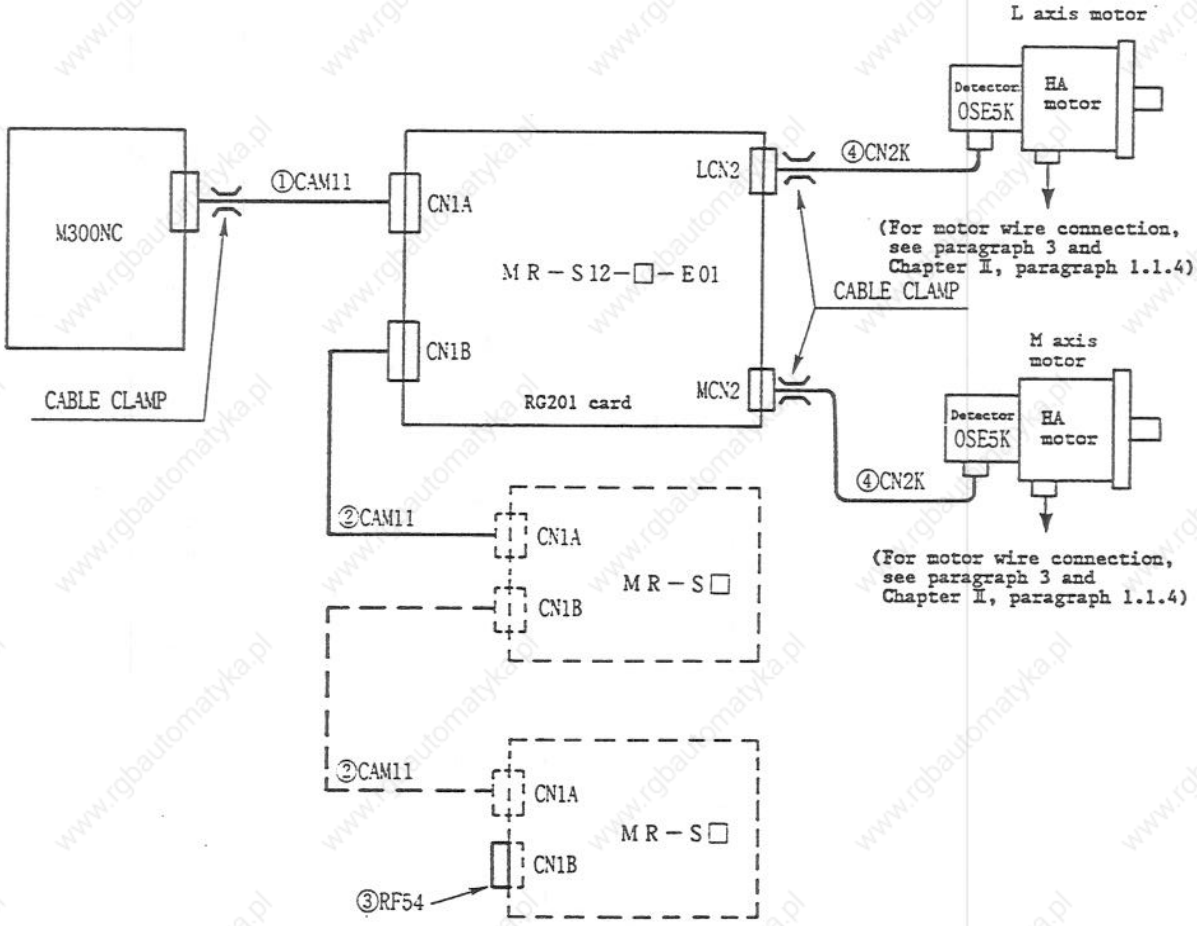


| Part No. | Cable name | Application | Q'ty | Standard length | Max. length | Reference paragraph for specifications |
|---|---|---|---|---|---|---|
| 1 | CAM11 | MCP-AMP or SIF-AMP CABLE | 1 | 5m | 30m overall length | Appendix 2 |
| 2 | CAM11 | AMP-AMP CABLE | K-1 | 0.5m | | |
| 3 | RF54 | CABLE END | 1 | - | - | |
| 4 | CN2K | AMP-ENC CABLE | N | 5m | 50m | |

Note (1) N: Total axes number N ≤ 6. (or N ≤ 4 with M310 NC)
K: Units of servo amplifiers

(2) Example of calculation of overall length of parts No. ①, ② cables: With standard length
... 1 x 5 + (K-1) x 0.5 (m)

(3) Following relation must be established: L axis motor capacity ≥ M axis motor capacity.

(10) High accuracy type (submicron, motor shaft end detection)

MR-S12-□-E33 Cable diagram

Case of total axes high accuracy type is shown.

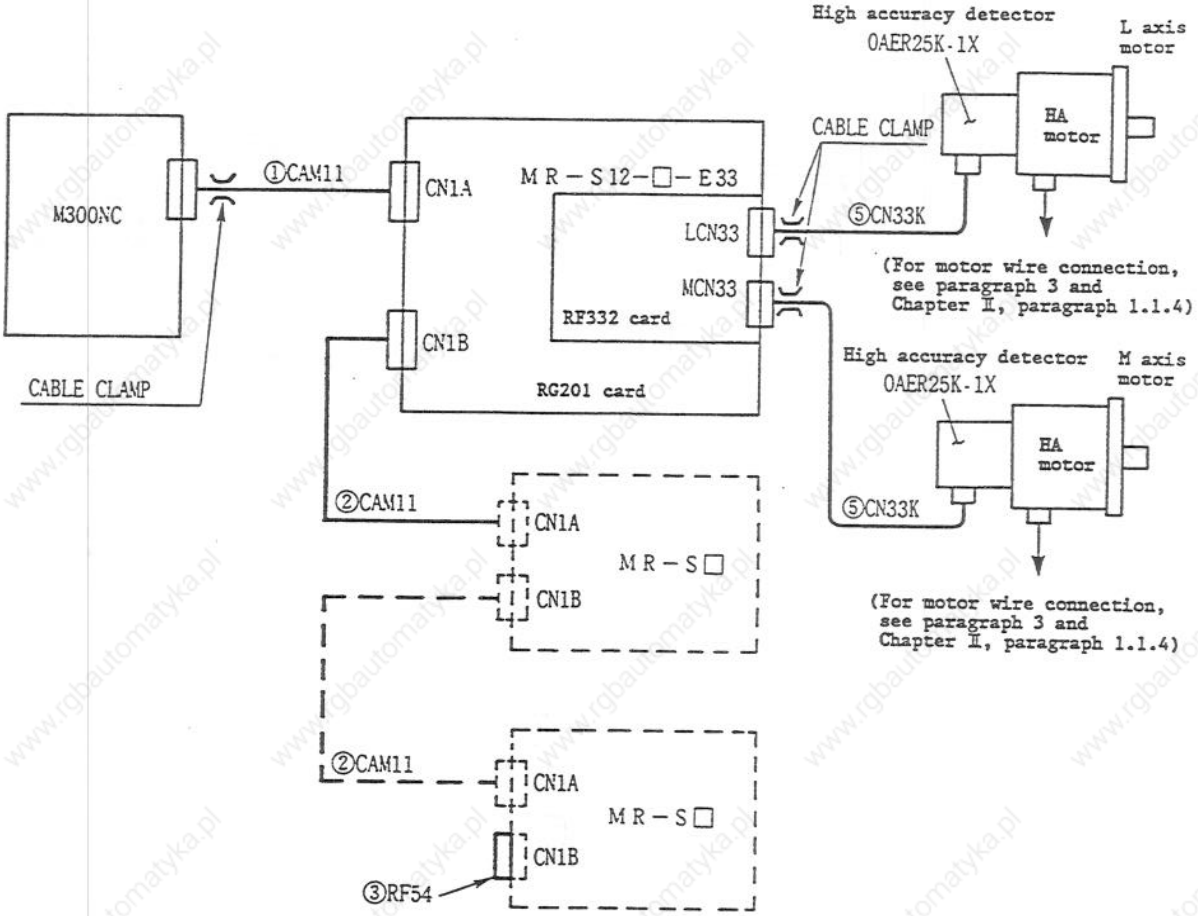


| Part No. | Cable name | Application | Q'ty | Standard length | Max. length | Reference paragraph for specifications |
|---|---|---|---|---|---|---|
| 1 | CAM11 | MCP-AMP or SIF-AMP CABLE | 1 | 5m | 30m overall length | Appendix 2 |
| 2 | CAM11 | AMP-AMP CABLE | K-1 | 0.5m | | |
| 3 | RF54 | CABLE END | 1 | - | - | |
| 4 | CN2K | AMP-ENC CABLE | N-n | 5m | 50m | |
| 5 | CN33K | AMP-ENC CABLE | n | 5m | 50m | |

Note (1) N: Total axes number N ≤ 6. (or N ≤ 4 with M310 NC)
n: Number of axes of high accuracy type.
K: Units of servo amplifier
(2) Example of calculation of overall length of parts No. ①, ② cables: With standard length ... 1 x 5 + (K-1) x 0.5 (m)
(3) The following relation must be established: L axis motor capacity ≥ M axis motor capacity.

(11) Ball screw end detection type (1 micron)

MR-S12-□-E31 Cable diagram

Case of ball screw end detection type No.1, 2 axes is shown.

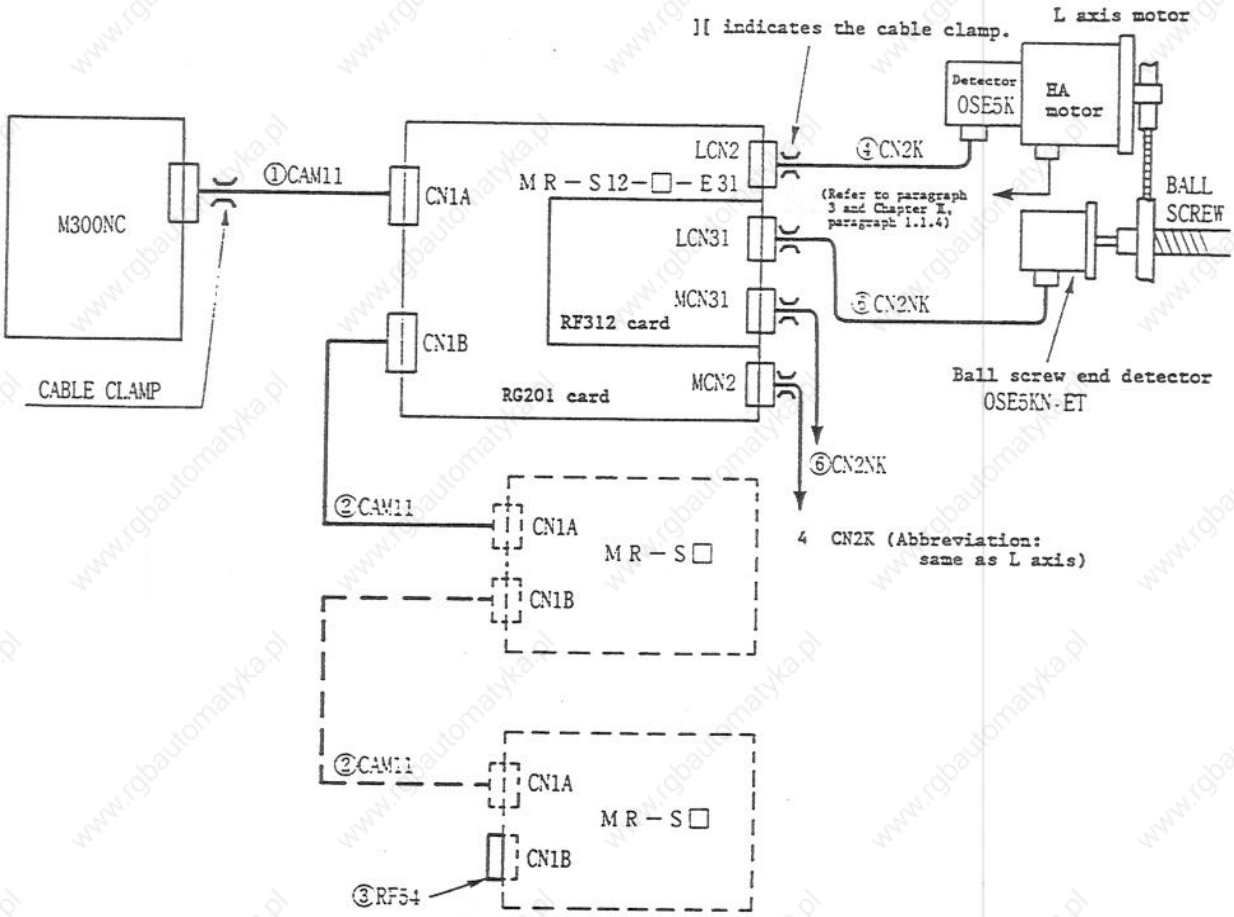


| Part No. | Cable name | Application | Q'ty | Standard length | Max. length | Reference paragraph for specifications |
|---|---|---|---|---|---|---|
| 1 | CAM11 | MCP-AMP or SIF-AMP CABLE | 1 | 5m | 30m overall length | Appendix 2 |
| 2 | CAM11 | AMP-AMP CABLE | K-1 | 0.5m | | |
| 3 | RF54 | CABLE END | 1 | - | - | |
| 4 | CN2K | AMP-ENC CABLE | N | 5m | 50m | |
| 6 | CN2NK | AMP-ENC CABLE | n | 5m | 50m | |

Note (1) N: Total axes number N ≤ 6.
n: Number of axes of ball screw end detection type.
K: Units of servo amplifiers
(2) Example of calculation of overall length of parts No. ①, ② cables: With standard length ... 1 x 5 + (K-1) x 0.5 (m)
(3) The following relation must be established: L axis motor capacity ≥ M axis motor capacity.

(12) Scale F/B type (1 micron)

MR-S12-□-E31 Cable diagram

Case of scale F/B type No.1, 2 axes is shown.

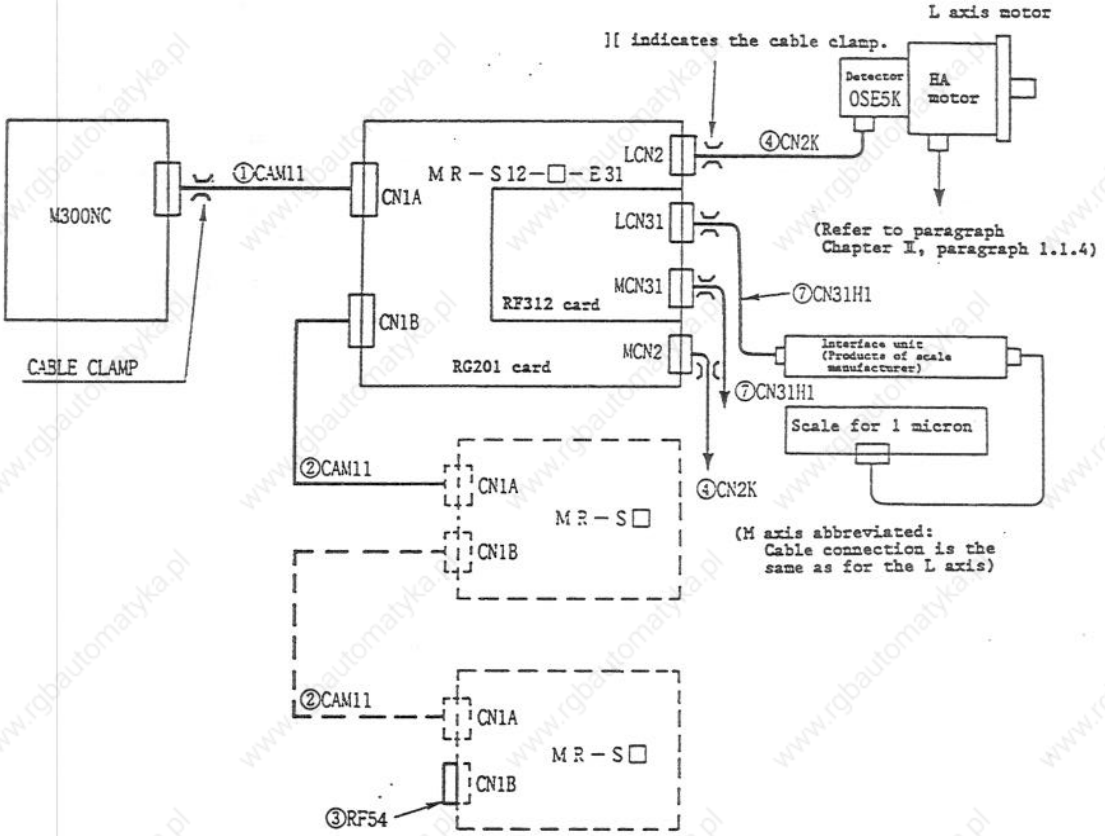


| Part No. | Cable name | Application | Q'ty | Standard length | Max. length | Reference paragraph for specifications |
|---|---|---|---|---|---|---|
| 1 | CAM11 | MCP-AMP or SIF-AMP CABLE | 1 | 5m | 30m overall length | Appendix 2 |
| 2 | CAM11 | AMP-AMP CABLE | K-1 | 0.5m | | |
| 3 | RF54 | CABLE END | 1 | - | - | |
| 4 | CN2K | AMP-ENC CABLE | N | 5m | 50m | |
| 7 | CN31H | AMP-I/F UNIT CABLE | n | Manufacturer's specifications | Manufacturer's specifications | Option |

Note (1) N: Total axes number N ≤ 6.
n: Number of axes of scale F/B type.
K: Units of servo amplifiers
(2) Example of calculation of overall length of parts No. ①, ② cables: With standard length ... 1 x 5 + (K-1) x 0.5 (m)
(3) The following relation must be established: L axis motor capacity ≥ M axis motor capacity.

(13) High accuracy scale F/B type (submicron)

MR-S12-□-E33 Cable diagram

Case of high accuracy scale F/B type No.1 axis is shown.

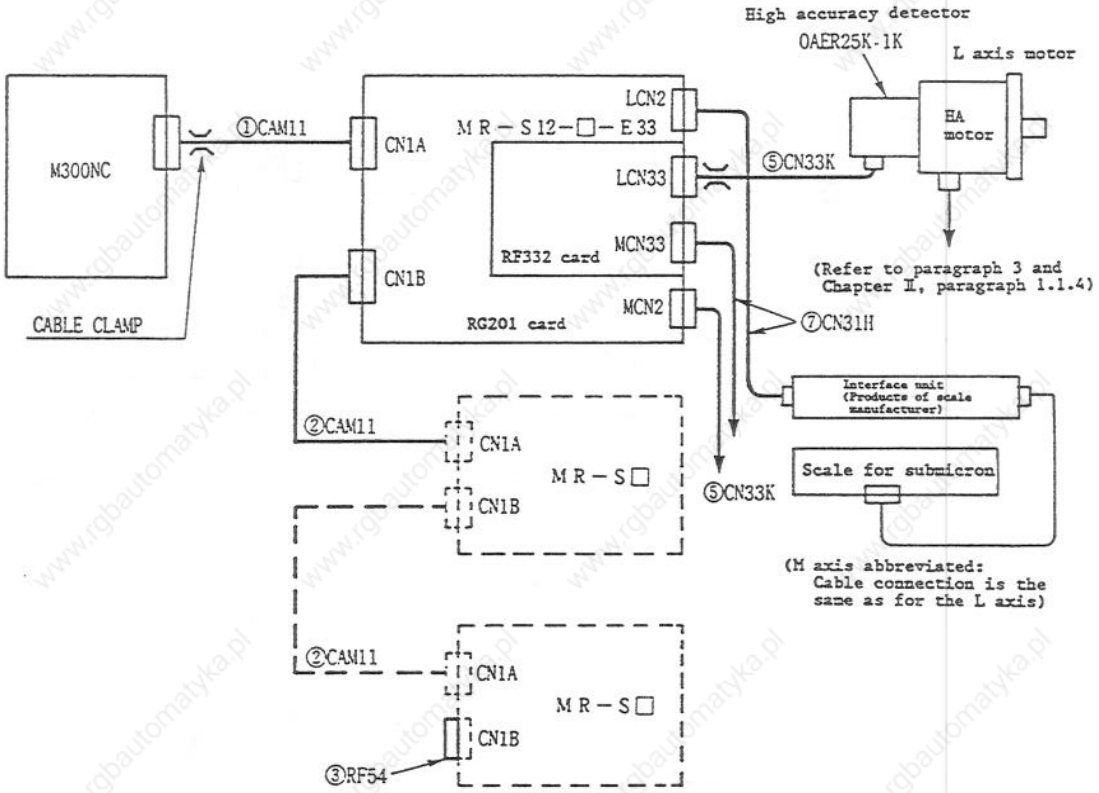


| Part No. | Cable name | Application | Q'ty | Standard length | Max. length | Reference paragraph for specifications |
|---|---|---|---|---|---|---|
| 1 | CAM11 | MCP-AMP or SIF-AMP CABLE | 1 | 5m | 30m overall length | Appendix 2 |
| 2 | CAM11 | AMP-AMP CABLE | K-1 | 0.5m | | |
| 3 | RF54 | CABLE END | 1 | - | - | |
| 4 | CN2K | AMP-ENC CABLE | N-n | 5m | 50m | |
| 5 | CN33K | AMP-ENC CABLE | n | 5m | 20m | |
| 7 | CN31H | AMP-I/F UNIT CABLE | n | Manufacturer's specifications | Manufacturer's specifications | Option |

Note (1) N: Total axes number N ≤ 6.
n: Number of axes of high accuracy scale F/B type.
K: Units of servo amplifier
(2) Example of calculation of overall length for parts No. ①, ② cables: With standard length ... 1 x 5 + (K-1) x 0.5 (m)
(3) The following relation must be established: L axis motor capacity ≥ M axis motor capacity.

## (14) Inductosyn F/B type (1 micron)

MR-S11-□-E31 Cable diagram

Case of Inductosyn F/B type of micron/P with No. 1, 2 axes is shown.

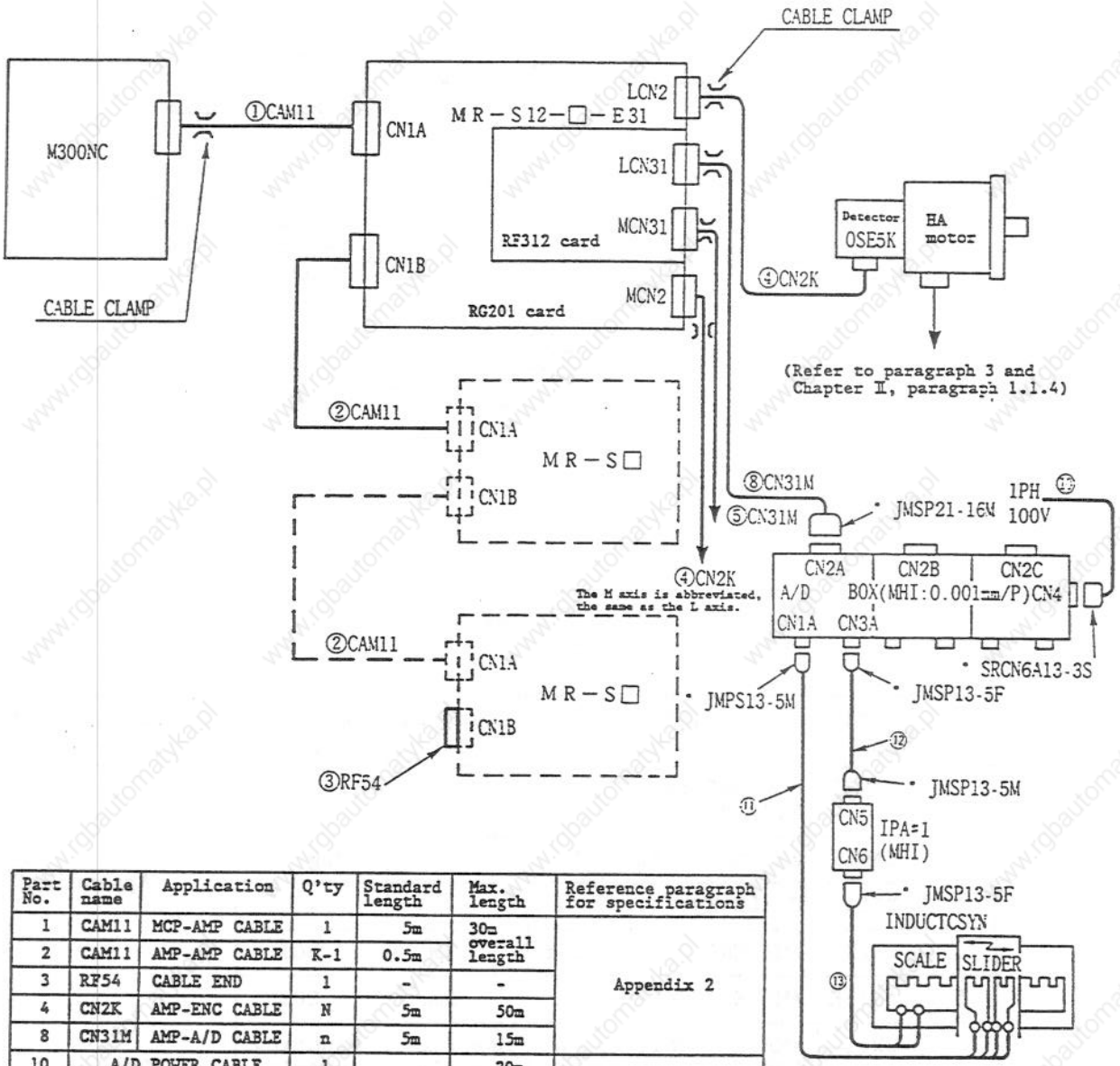


| Part No. | Cable name | Application | Q'ty | Standard length | Max. length | Reference paragraph for specifications |
|---|---|---|---|---|---|---|
| 1 | CAM11 | MCP-AMP CABLE | 1 | 5m | 30m overall length | Appendix 2 |
| 2 | CAM11 | AMP-AMP CABLE | K-1 | 0.5m | | |
| 3 | RF54 | CABLE END | 1 | - | - | |
| 4 | CN2K | AMP-ENC CABLE | N | 5m | 50m | |
| 8 | CN31M | AMP-A/D CABLE | n | 5m | 15m | |
| 10 | A/D POWER CABLE | | 1 | | 20m | Instruction Manual No.I-134 by Mitsubishi Heavy Industory, November 1985 |
| 11 | A/D SLIDER CABLE | | n | | 20m | |
| 12 | A/D LPA CABLE | | n | | 20m | |
| 13 | IPA-SCALE CABLE | | n | | 0.5m | |

Note (1) N: Total axes number N ≤ 6.
n: Number of axes of inductosyn F/B type.
K: Units of servo amplifier
(2) Example of calculation of overall length for parts No. ①, ② cables: With standard length ... 1 x 5 + 0.5 x (N-1) m
(3) Plug with * mark is an accessory of Inductosyn system.
(4) The following relation must be established, L axis motor capacity ≥ M axis motor capacity.

(15) Absolute position detection type (1 micron, motor shaft end detection)

MR-S12-□-Z33 Cable diagram

Case of absolute position detection type No. 1, 2 axis is shown.

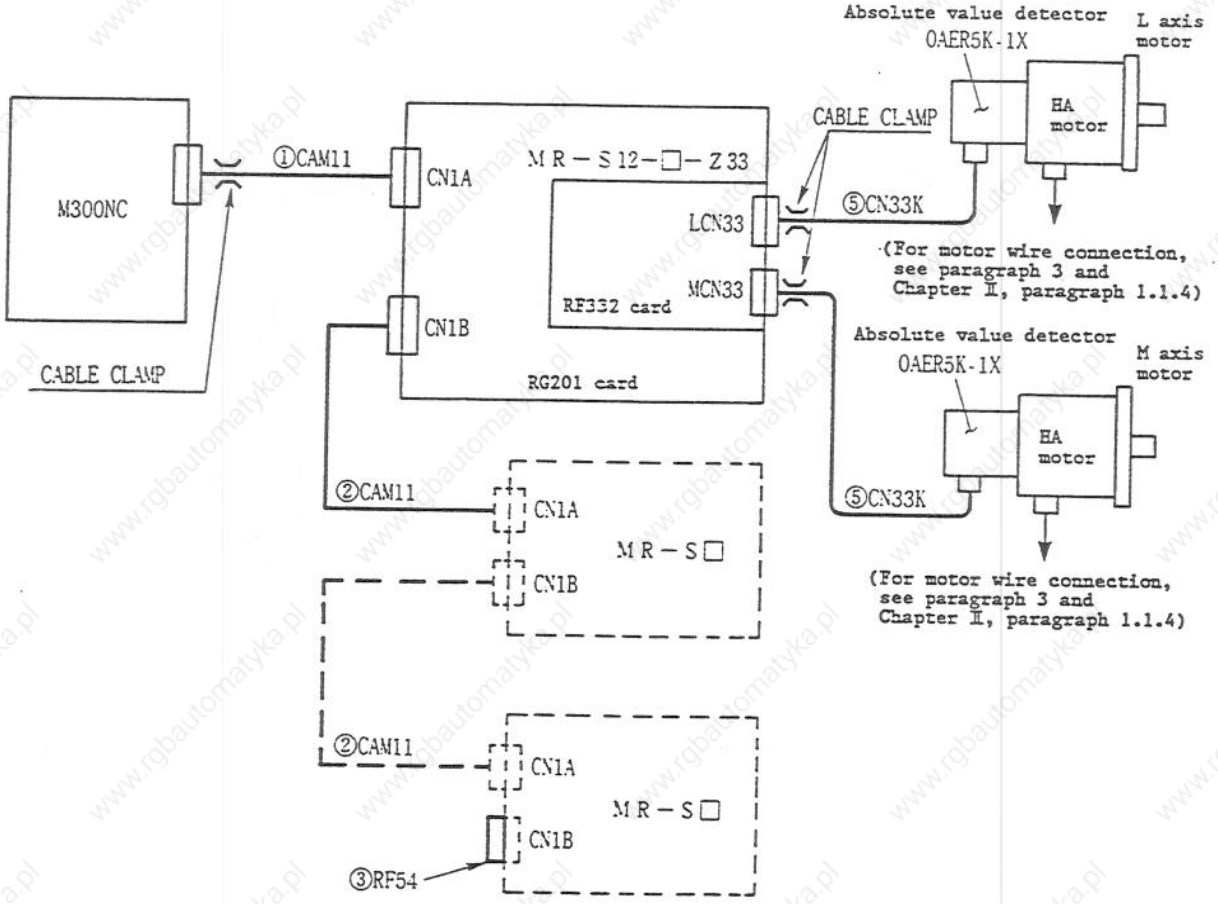


| Part No. | Cable name | Application | Q'ty | Standard length | Max. length | Reference paragraph for specifications |
|---|---|---|---|---|---|---|
| 1 | CAM11 | MCP-AMP CABLE | 1 | 5m | 30m overall length | Appendix 2 |
| 2 | CAM11 | AMP-AMP CABLE | K-1 | 0.5m | | |
| 3 | RF54 | CABLE END | 1 | - | - | |
| 4 | CN2K | AMP-ENC CABLE | N-n | 5m | 50m | |
| 5 | CN31M | AMP-ENC CABLE | n | 5m | 50m | |

Note (1) N: Total axes number N ≤ 6. (or N ≤ 4 with M310 NC)
n: Number of axes of absolute position detection type.
K: Units of servo amplifier
(2) Example of calculation of overall length of parts No. ①, ② cables: 1 x 5 + (K-1) x 0.5 (m)
(3) The following relation must be established: L axis motor capacity ≥ M axis motor capacity.

(16) Absolute position, ball screw end detection type (1 micron)

MR-S12-□-Z33 Cable diagram

Case of absolute position, ball screw end detection type No.1, 2 axes are shown.

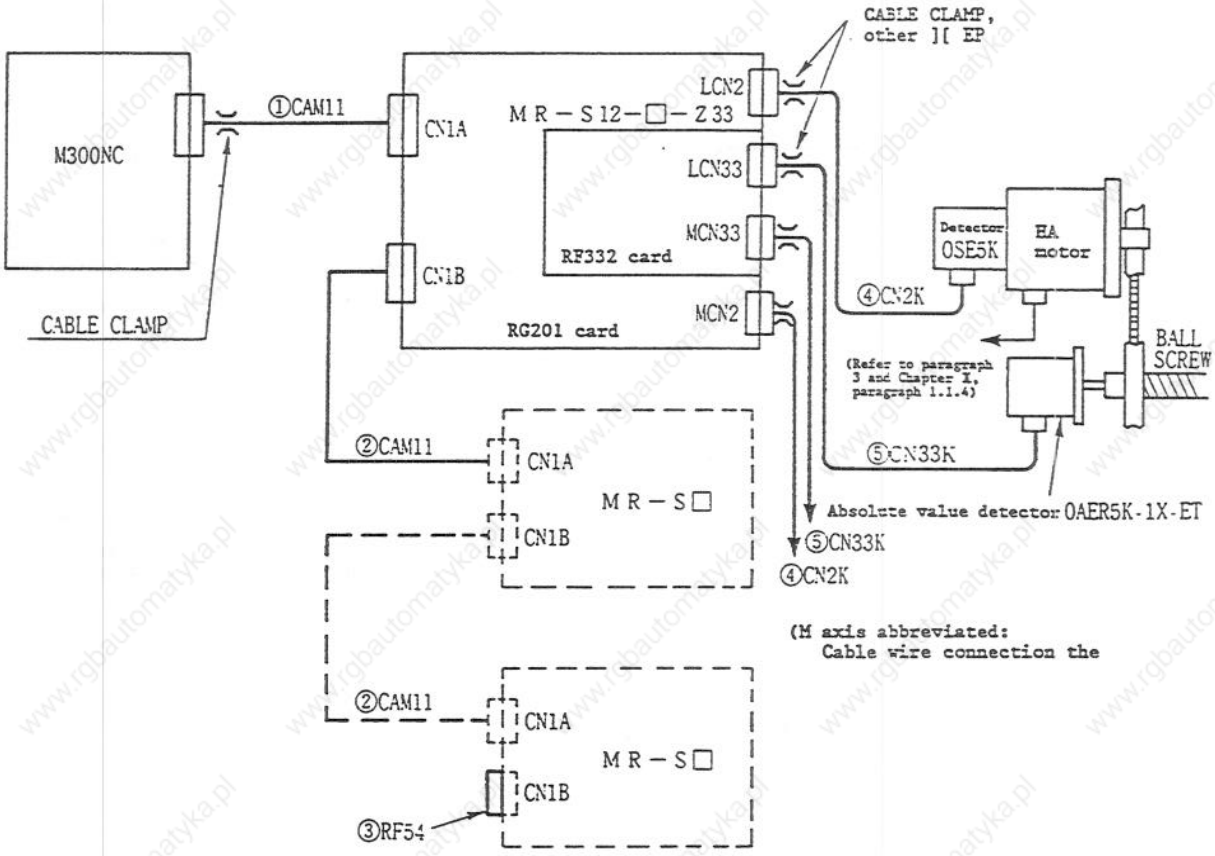


| Part No. | Cable name | Application | Q'ty | Standard length | Max. length | Reference paragraph for specifications |
|---|---|---|---|---|---|---|
| 1 | CAM11 | MCP-AMP CABLE | 1 | 5m | 30m overall length | Appendix 2 |
| 2 | CAM11 | AMP-AMP CABLE | K-1 | 0.5m | | |
| 3 | RF54 | CABLE END | 1 | - | - | |
| 4 | CN2K | AMP-ENC CABLE | N | 5m | 50m | |
| 5 | CN31M | AMP-ENC CABLE | n | 5m | 50m | |

Note (1) N: Total axes number N ≤ 6.
n: Number of axes of absolute position, ball screw end detection type.
K: Units of servo amplifier
(2) Example of calculation of overall length of parts No. ①, ② cables: 1 x 5 + (N-1) x 0.5 (m)
(3) The following relation must be established: L axis motor capacity ≥ M axis motor capacity.

# APPENDIX 2 CABLE SPECIFICATION

| Name | Cable specification |
|---|---|
| CAM11<br>Continued<br><br>MCP-AMP CABLE<br>‖<br>CAM11 of MCP is connected to CN1A of AMP.<br><br>AMP-AMP CABLE<br>‖<br>CN1B of the AMP is connected to CN1A of the NEXT AMP. | 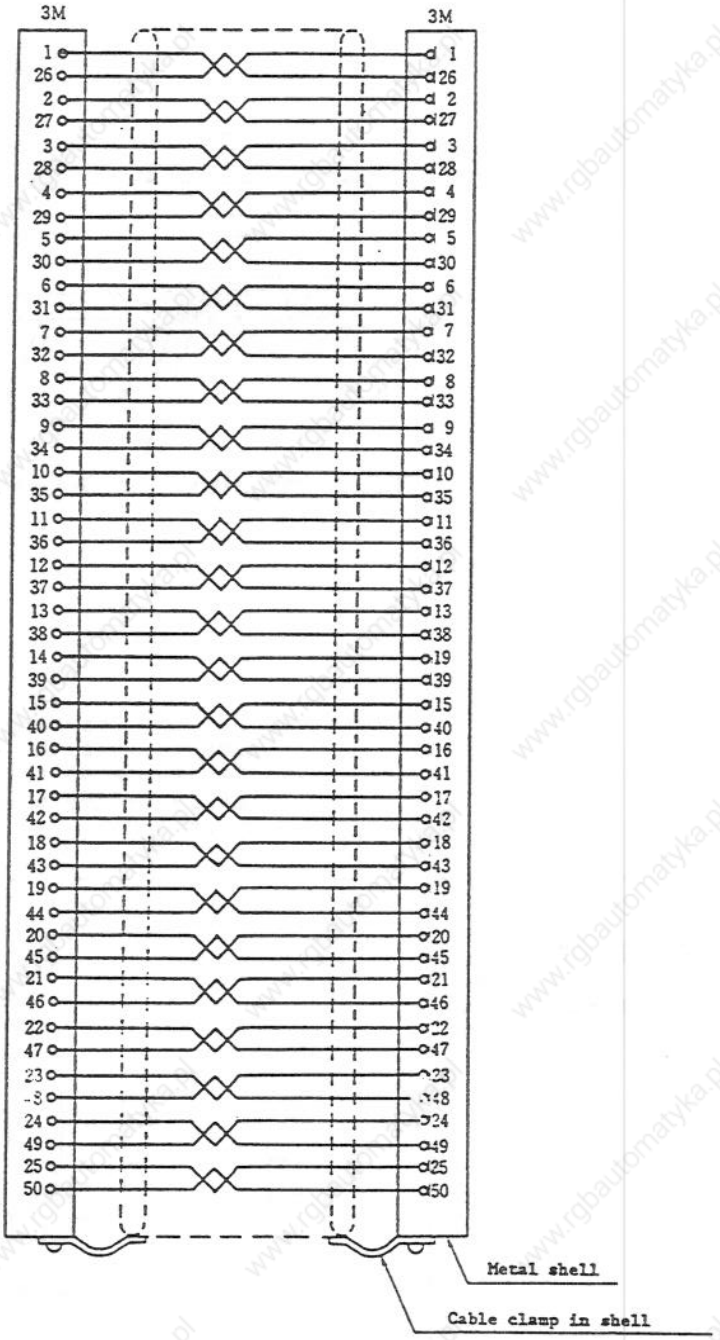 |

| Name | Cable specification |
|---|---|
| CAM11<br>Continued | 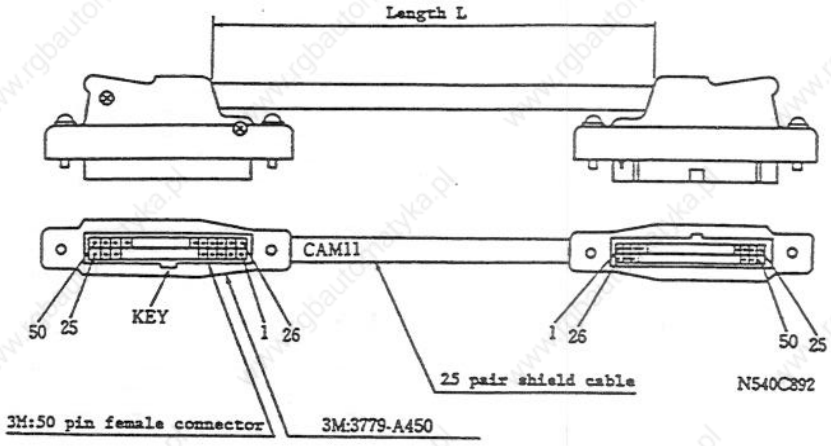 <br>Note (1) For the standard length and the maximum length, see the cable system diagram.<br>(2) The shape of the left portion of the CAM11 cable is the same as that of the right portion |
| RF54<br>CABLE END<br>This connector is inserted into CN1B of the last AMP. | 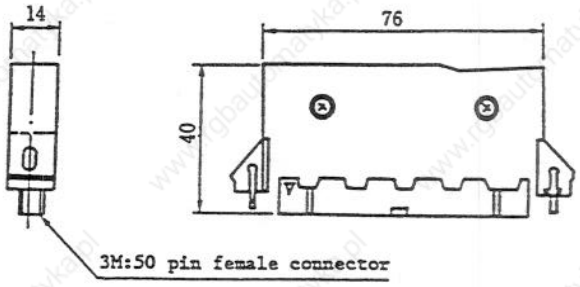 |

## Detector cable

### AMP-ENC CABLE (OSE5K/OSE5K-ET)

| Name | Cable specification |
|---|---|

CN2K

(CN2K1 - 6)

(CN31R1 - 6)

AMP-ENC CABLE

When the cable length ranges from 7.5 m to 50 m.

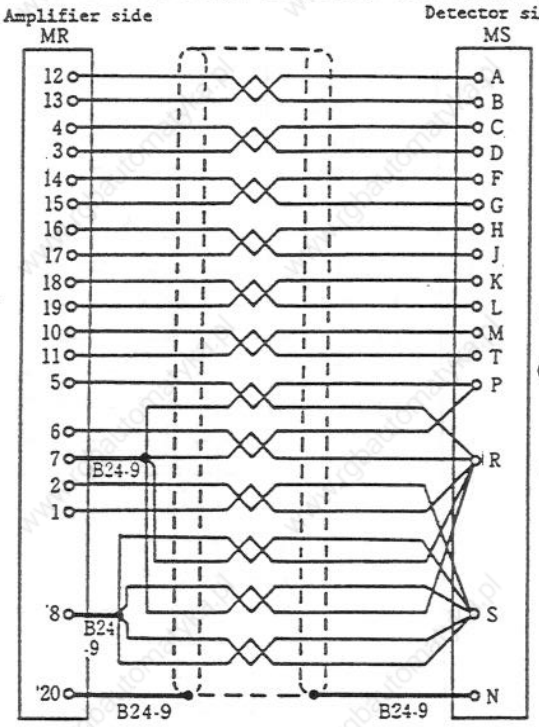


Connector type

○ MR connector

Case MR-20L5

Housing MPR-20M01

Contact MRP-M102 (Honda)

○ Cannon connector

Connector MS3108B20-29S (Japan Aviation Electronics)

Clamp MS3057-12A

○ Cable type

F-DPEVSB 12P×0.2SQ (Daiichi Denko)

Max. L=50m

When the cable length is less than 7.5 m.

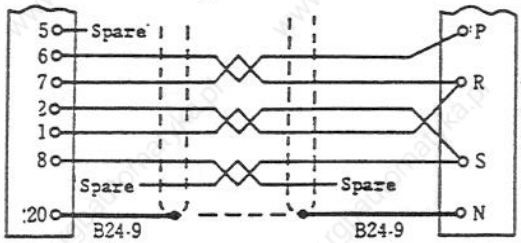


The structure is the same as the above figure except for the connections of pins, P, R, and S. However, the length should be L ≤ 7.5 m. Standard length L = 5 m.

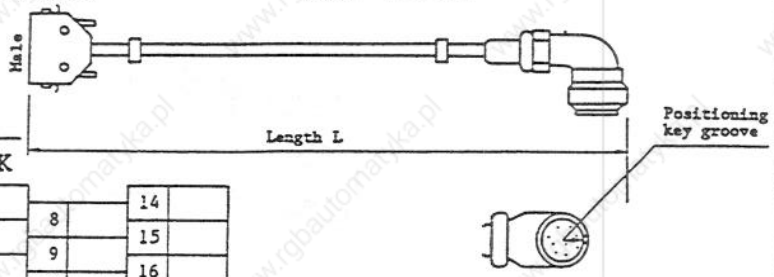


Signal name (reference)

• RF01 card CN2 → OSE-5K

| | | | | | | | | | | | | | | | |
|---|---|---|---|---|---|---|---|---|---|---|---|---|---|---|---|
| 1 | GND | 8 | +5 | 14 | PZ | 1 | | 8 | | 14 | | | | | |
| 2 | +5 | 9 | | 15 | PZR | 2 | | 9 | | 15 | | | | | |
| 3 | PBR | 10 | PW | 16 | PU | 3 | | 10 | | 16 | | | | | |
| 4 | PB | 11 | PWR | 17 | PUR | 4 | | 11 | | 17 | | | | | |
| 5 | +15 | 12 | PA | 18 | PV | 5 | | 12 | | 18 | | | | | |
| 6 | +15 | 13 | PAR | 19 | PVR | 6 | | 13 | | 19 | | | | | |
| 7 | GND | | | 20 | SG | 7 | | | | 2 | | | | | |

N541C582
N541C583

## AMP-ENC CABLE

| Name | Cable specification |
|---|---|
| CN33K<br>(CN33K1 - 6)<br>(CN33R1 - 6)<br><br>AMP-ENC CABLE | 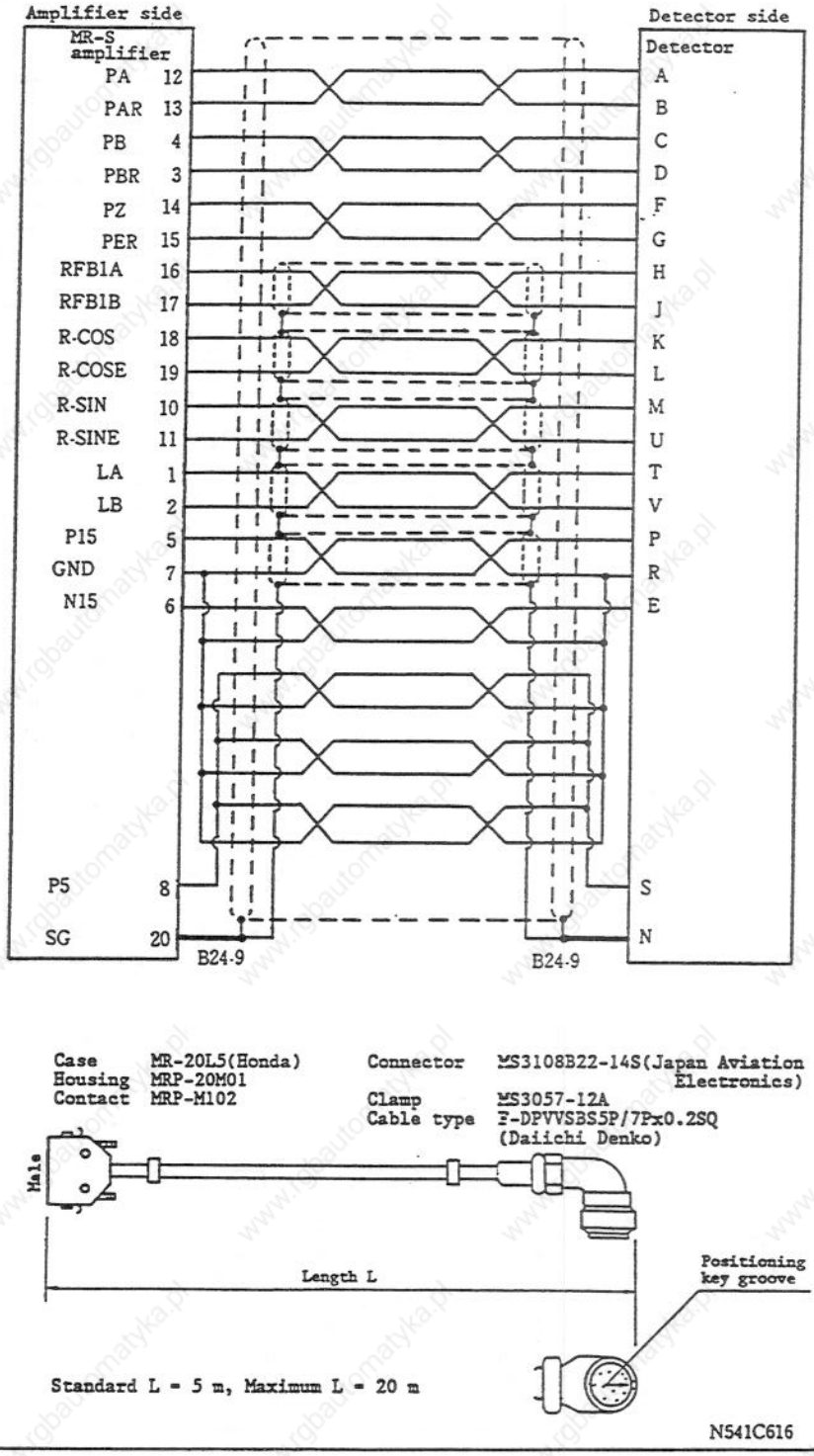 |

## AMP-ENC CABLE (OSE5KN/OSE5KN-ET□ONLY)

| Name | Cable specification |
|---|---|
| CN2NK<br>(CN2NK1 - 6)<br>(CN2NR1 - 6)<br><br>·P ENC CABLE | 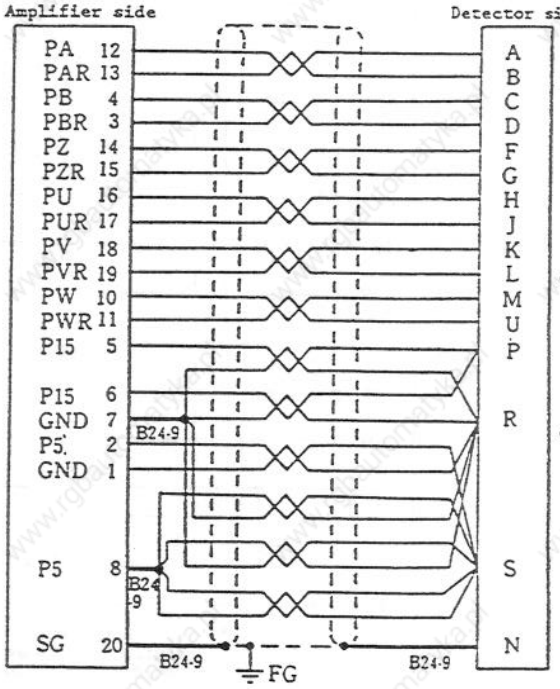 |



Note) This cable is used for the 19-pin connector type standard encoder OSE5KN-6-12-108 and the 19-pin connector type ball screw mounting encoder OSE5KN-ET1-3-9.52-0 rather than the 17-pin connector type encoders OSE5K-6-12-108 and OSE5K-ET1-3-9.52-0 and the absolute value encoders OAER5K and OAER25K.

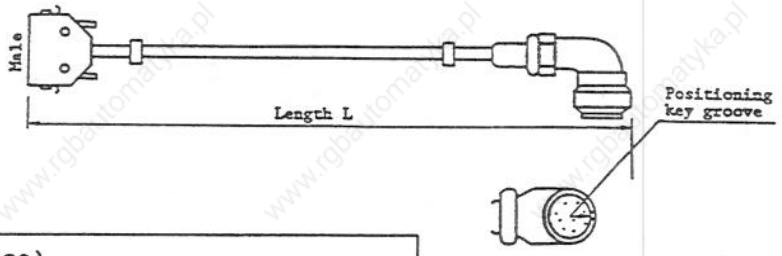



### Signal name (reference)

• RG101 card CN2 → OSE 5KN

| | | | | | | | | | | | |
|---|---|---|---|---|---|---|---|---|---|---|---|
| 1 | GND | 8 | P5 | 14 | PZ | 1 | | 8 | | 14 | |
| 2 | P5 | 9 | | 15 | PZR | 2 | | 9 | | 15 | |
| 3 | PBR | 10 | PW | 16 | PU | 3 | | 10 | | 16 | |
| 4 | PB | 11 | PWR | 17 | PUR | 4 | | 11 | | 17 | |
| 5 | P15 | 12 | PA | 18 | PV | 5 | | 12 | | 18 | |
| 6 | P15 | 13 | PAR | 19 | PVR | 6 | | 13 | | 19 | |
| 7 | GND | | | 20 | SG | 7 | | | | 20 | |

N541C671

## AMP-I/F UNIT CABLE

| Name | Cable specification |
|---|---|

CN31H

(CN31H1 - CN31H6)

AMP-I/F UNIT CABLE

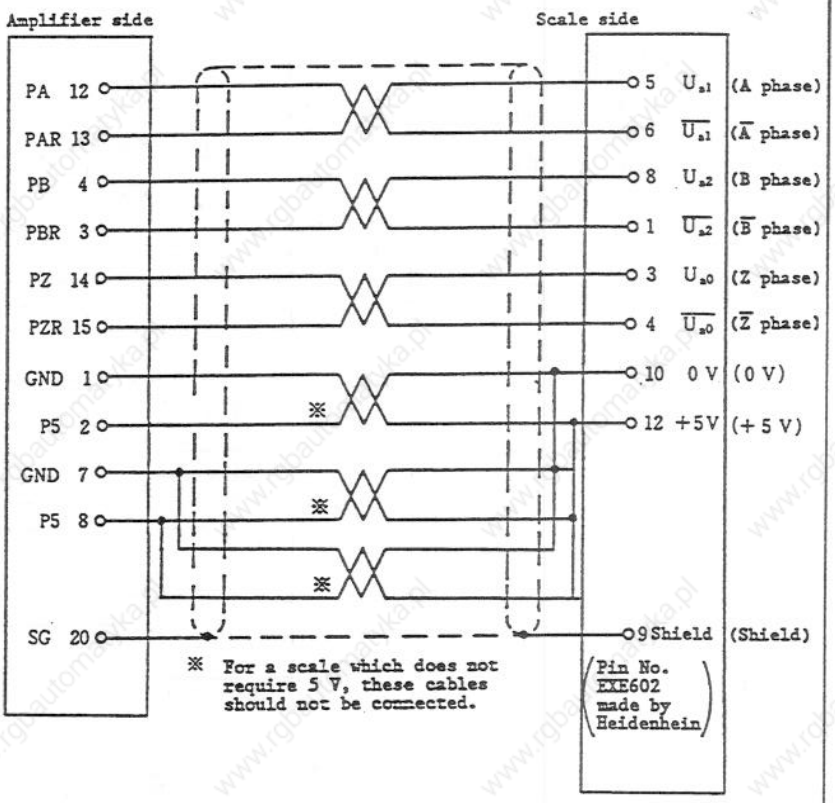


Case MR-20L5
Housing MRP-20M01
Contact MRP-M102

Cable type
F-DPEVSB 12Px0.2SQ
(Daiichi Denko)

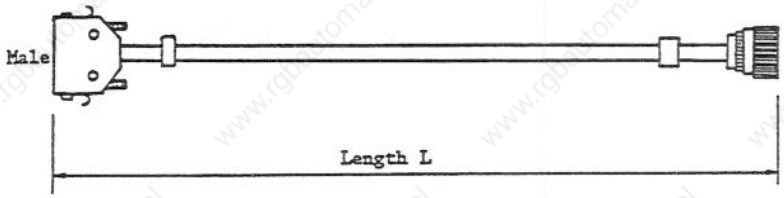


For details of the mate plug, contact the scale maker.

Signal name (reference)

| | | | | | |
|---|---|---|---|---|---|
| 1 | GND | 8 | +5 | 14 | PZ |
| 2 | +5 | 9 | | 15 | PZR |
| 3 | PBR | 10 | | 16 | |
| 4 | PB | 11 | | 17 | |
| 5 | | 12 | PA | 18 | |
| 6 | | 13 | PAR | 19 | |
| 7 | GND | | | 20 | SG |

Note) The output capacity of P5 is 250 mA, max.

## AMP-A/D CABLE

| Name | Cable specification |
|---|---|
| CN31M<br>(CN31M1 - CN31M6)<br>AMP-A/D CABLE | |

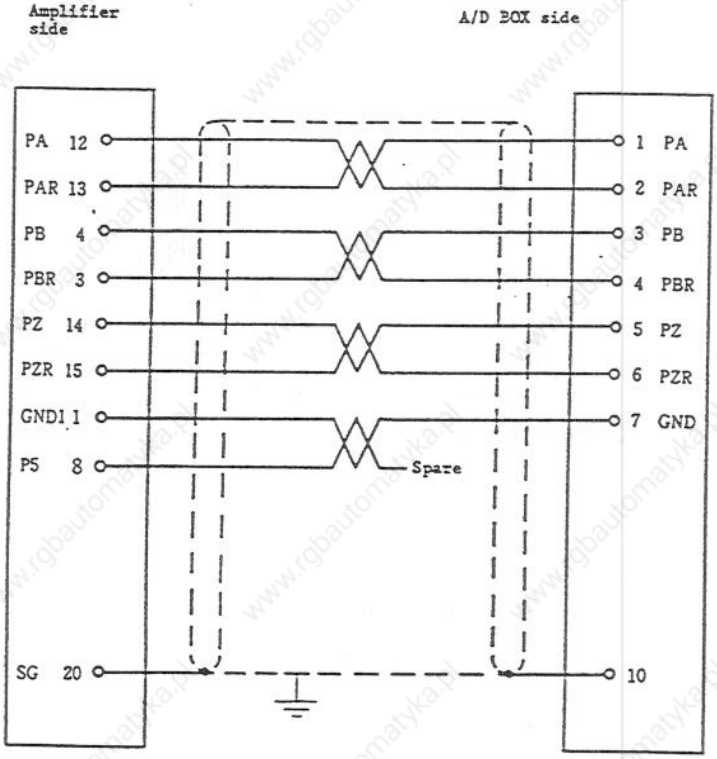


Note 1) The above wiring is an example of the use of A/D converter.

Case MR-20L5 (Honda)
Housing MRP-20M01
Contact MRP-M102

Cable type
F-DPEVSB 12Px0.2SQ
(Daiichi Denko)

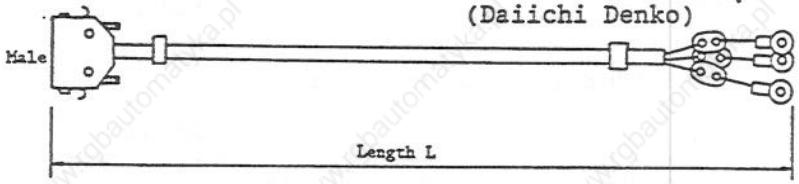


Since the mate plug JMSP21-16M is attached to the inductsyn system, the plug is not provided.

Standard L = 5 m
Maximum L = 20 m

### Signal name (reference)

• RF31 card CN31

| | | | | | |
|---|---|---|---|---|---|
| 1 | GND | | | 14 | PZ |
| 2 | +5 | 8 | +5 | 15 | PZR |
| 3 | PBR | 9 | | 16 | |
| 4 | PB | 10 | | 17 | |
| 5 | +15 | 11 | | 18 | |
| 6 | +15 | 12 | PA | 19 | |
| 7 | GND | 13 | PAR | 20 | SG |

CN2 of inductsyn A/D

| | | | |
|---|---|---|---|
| (1) | PA | (2) | PA |
| (3) | PB | (4) | PB |
| (5) | PZ | (6) | PZ |
| (7) | GP | (10) | SE |
| (12) | TSA | (13) | TSB |
| (15) | OH1 | (16) | OH2 |

## 20-pin Square Connector (Honda)

(1) Connector case MR20L5

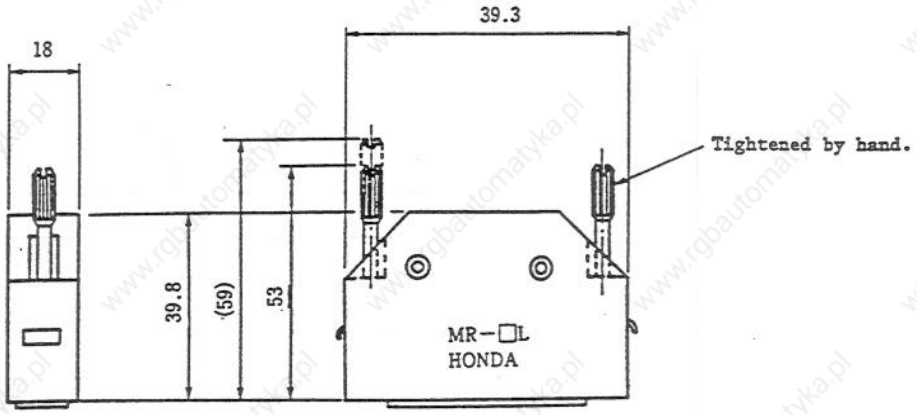


(2) Connector case MR-20L

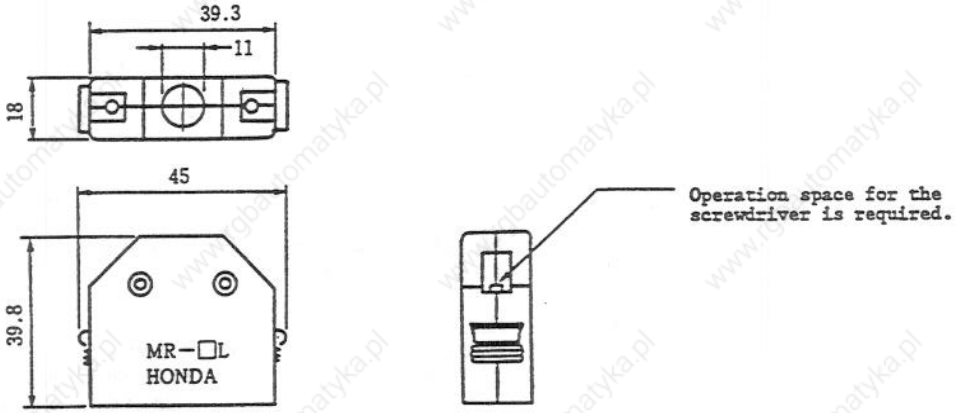


(3) Soldering type connector

MR-20M

MR-20F

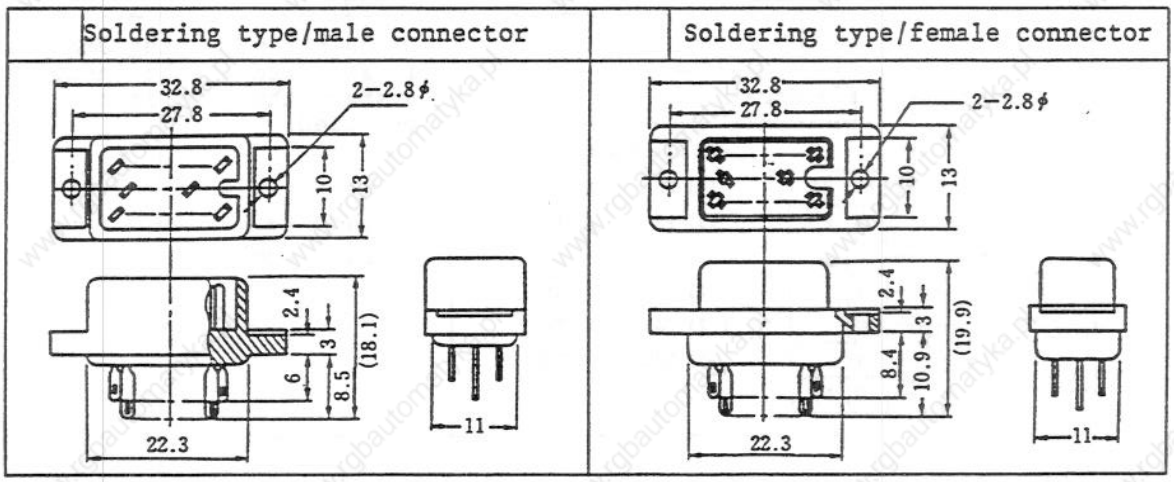

(4) Solderless type connector

MRP-20M01

MRP-20F01

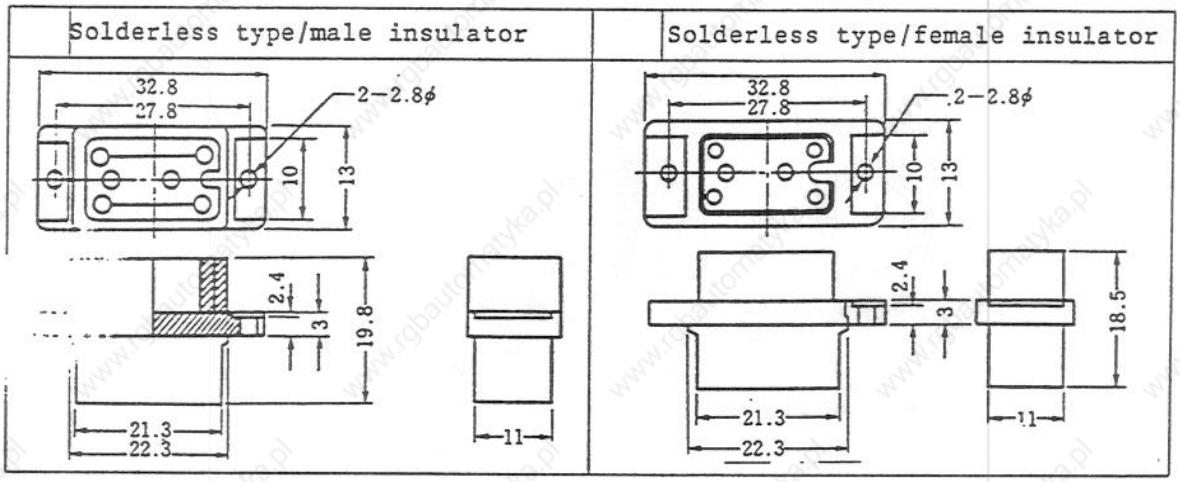


MRP-M102

MRP-F112

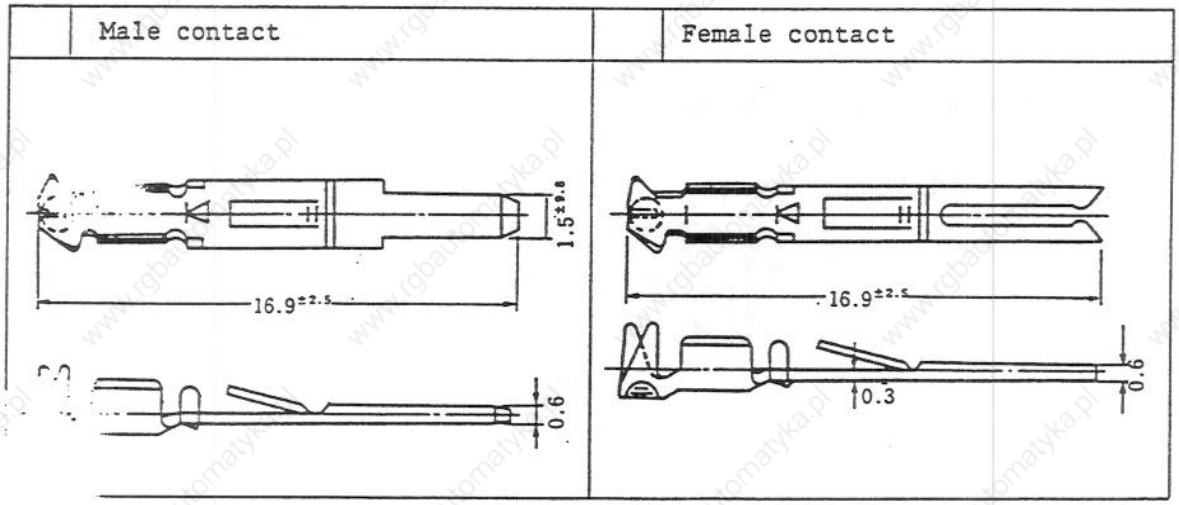


* The special solderless tool is required.

The servo amplifier and motor are not provided with the connectors and cables.

## Connector for Detector (Japan Aviation Electronics)

(1) Angular plug MS3108B20-29S

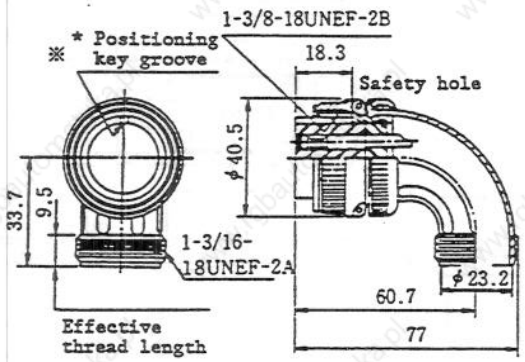


* Key position of Cannon connector: motor flange direction

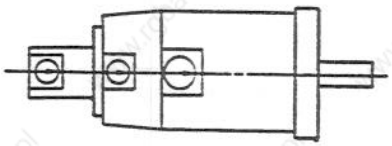

(2) Straight plug MS3106B20-29S

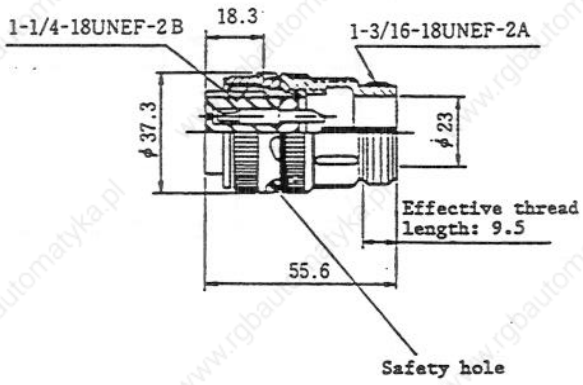


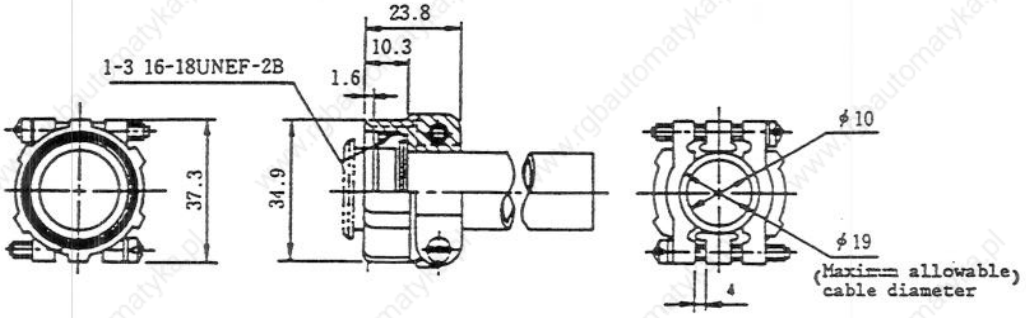


The servo amplifier and the motor are not provided with the connectors and the cables.

## Connector for Detector (Japan Aviation Electronics)

(4) Angular plug MS3108B22-14S

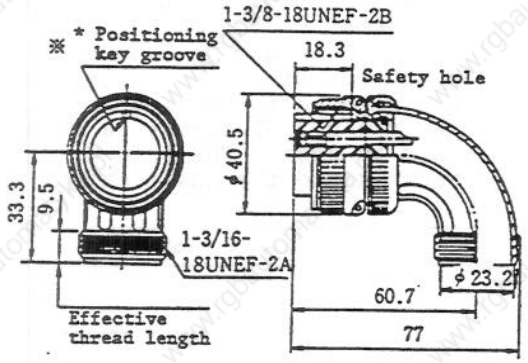


* Key position of Cannon connector: motor flange direction

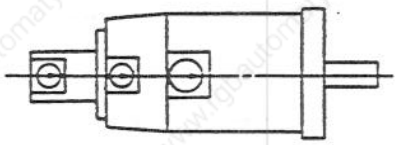

(2) Straight plug MS3106B22-14S

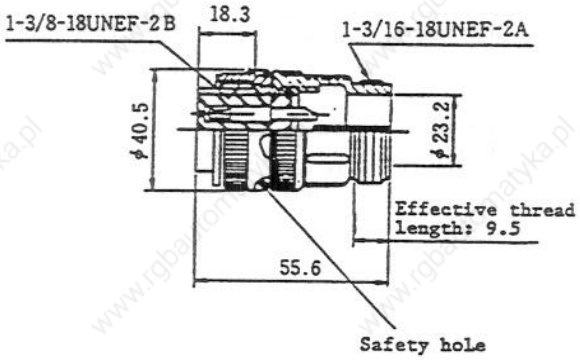


The servo amplifier and the motor are not provided with the connectors and the cables.

## Cable Protection Tube

When the effects of noise cannot be prevented or the noise-proof property is improved, the following metal tube should be selected and the signal cable should be passed to the tube.
This tube is also used when the cable sheath is cut or abraded by a cutting chip. In addition, on the detector side, the cable clamp MS3057 cannot be mounted. When the cables are exposed to bending and vibration, the cable may be broken. As the cable type 0.2 SQ cannot be used, a cable type whose conductor area is large should be used. The shield cable or the twist cable should be selected according to the instructions of Mitsubishi.

| Application | Example of assembling |
|---|---|
| Motor detector | 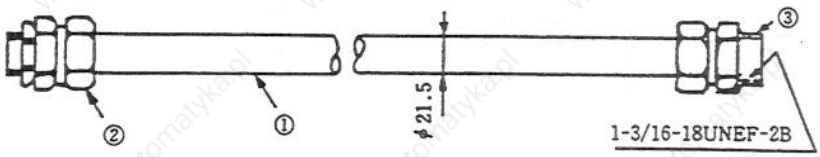 |



Table 5-4 Example of selection

| ① Tube | Connector | | | Manufacturer |
|---|---|---|---|---|
| | ② Amplifier side | Mounting screw | ③ Motor detector side | |
| FBA-4<br>(FePb wire braid sheath) | RBC-104 (Straight)<br>RBC-204 (45°)<br>RBC-304 (90°) | G16<br>G16<br>G16 | RCC-104-CA2022 | Nippon Flex K/K |
| Prica tube<br>PA-2 #17<br>(FePb sheath) | BC-17 (Straight) | Conduit thread 15 | PDC20-17 | Sankei S/S |
| Hiflex PT #17<br>(FePb sheath) | PSG-17 (Straight)<br>PLG-17 (90°)<br>PS-17 (Straight) | Thread diameter ø26.4<br>Thread diameter ø26.4 PF1/2 | PDC20-17 | Daiwa Dengyo K/K |

## Cable Clamps

Mount the earth plate near the servo amplifier, peel the cable sheath, and press the peeled shield cable to the earth plate using the cable clamp. When the cable is thin, clamp several cables. For details about precautions against noise, see 4.1 (9).

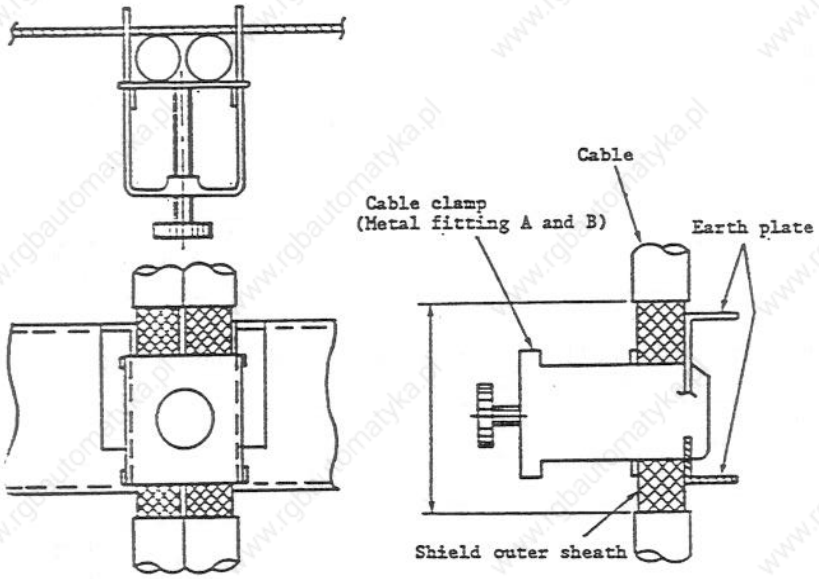


Clamping area view

The earth plate D and cable clamps A and B are supplied by Mitsubishi.

Earth plate (D) external drawing

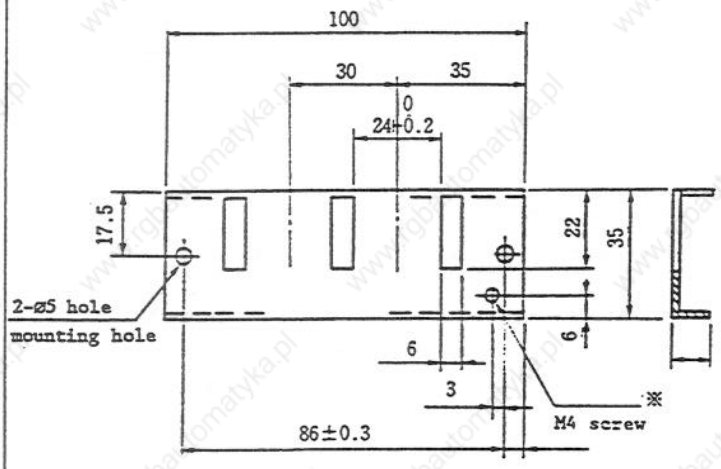


- The earth wiring cable should be connected between the earth plate and the cabinet earth plate.
- Two metal fitting A can be used.

* Screw hole for wiring to cabinet earth plate

Cable clamp external drawing

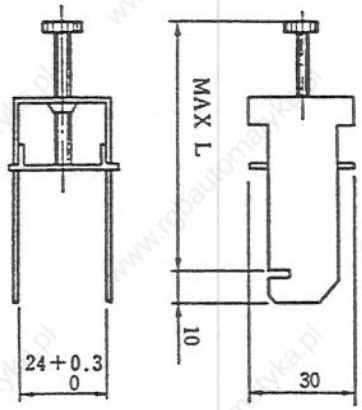


| | L |
|---|---|
| Metal fitting A | 70 |
| Metal fitting B | 45 |

APPENDIX 2
CABLE SPECIFICATION

## Cable Materials

When the wiring length between the motor and the amplifier is long and the motor is traveled, high bend resistant cables should be used.
The following table represents the typical types of cables made by Mitsubishi.

12-paired shielded cable
Model name: F-DPEVSB 12P x 0.2Q

| Q'ty and size (mm²) | Finished outer diameter (mm) | Characteristic of one cable | | | | Color | Bend resistant property | Remarks |
|---|---|---|---|---|---|---|---|---|
| | | Structure (q'ty/mm) | Conductor resistance (ohm/km) | - | - | | | |
| 12 x 0.2 | 11.0 | 40/0.08 | 100.5 | - | - | Black | Approx. 220 x $10^4$ times at R200 | |

Paired shield cable with 7 twisted pairs of conducting cables
Model name: F-DPVVSBS 7P x 0.2SQ

| Q'ty and size (mm²) | Finished outer diameter (mm) | Characteristic of one cable | | | | Color | Bend resistant property | Remarks |
|---|---|---|---|---|---|---|---|---|
| | | Structure (q'ty/mm) | Conductor resistance (ohm/km) | - | - | | | |
| 7 x 0.2 | 12.3 | 26/0.1 | 107 | - | - | Black | Approx. 24 x $10^4$ times at R200 | |

Paired shield cable with 7 twisted pairs of conducting cables + bundle of non-pairs cables.
Model name: JPVV-SBS-SB 7P x 0.2SQ

| Q'ty and size (mm²) | Finished outer diameter (mm) | Characteristic of one cable | | | | Color | Bend resistant property | Remarks |
|---|---|---|---|---|---|---|---|---|
| | | Structure (q'ty/mm) | Conductor resistance (ohm/km) | - | - | | | |
| 7 x 0.2 | 13.0 | 26/0.1 | 107 | - | - | Black | | 1st Electrical Work specification TS-86062 |

Special shielded cable
Model name: F-DPVVSBS 5P/7p x 0.2SQ

| Q'ty and size (mm²) | Finished outer diameter (mm) | Characteristic of one cable | | | | Color | Bend resistant property | Remarks |
|---|---|---|---|---|---|---|---|---|
| | | Structure (q'ty/mm) | Conductor resistance (ohm/km) | - | - | | | |
| 5 x 0.2<br>7 x 0.2 | 14.0 | 26/0.1 | 93.9 | - | - | Black | Approx. 40 x $10^4$ times at R200 | 12-pair shield cable including 5-pair shield cable BKO-NC6265 |

## Oil Proof Type AC Servo Motor Cable Connectors

For Flexible Conduit (90° angle type)

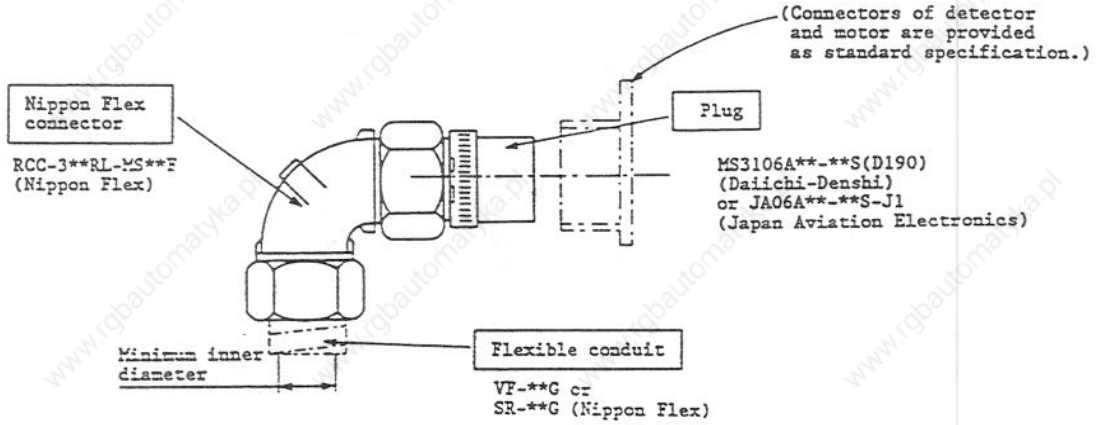


Note: The mate connector (receptacle) mounted on the motor can be used in the standard specification. The cable side connector is provided as a special specification.

For motor connector

| Servo motor model name | Plug | | Nippon Flex connector | Flexible conduit | |
|---|---|---|---|---|---|
| | Daiichi Denshi | Japan Aviation Electronics | Nippon Flex | Nippon Flex | Minimum inner diameter |
| HA053C HA053CB<br>HA23C HA23CB<br>HA33C HA33CB<br>HA13C HA13CB | MA3106A18-12S (D190) | JA06A-18-12S -J1 | RCC-303RL-MS18F | VF-03 SR-03 | 10.6 |
| | | | RCC-304RL-MS18F | VF-04 SR-04 | 14.0 |
| | | | RCC-306RL-MS18F | VF-06 SR-06 | 19.0 |
| HA40C HA40CB<br>HA80C HA80CB<br>HA43C HA43CB<br>HA83C HA83CB | MS3106A22-23S (D190) | JA06A-22-23S -J1 | RCC-304RL-MS22F | VF-04 SR-04 | 14.0 |
| | | | RCC-306RL-MS22F | VF-06 SR-06 | 19.0 |
| | | | RCC-308RL-MS22F | VF-08 SR-08 | 24.4 |
| HA100C HA100CB<br>HA103C HA103CB<br>HA200C HA200CB<br>HA203C HA203CB<br>HA300C HA300CB | MS3106A24-10S (D190) | JA06A-24-10S -J1 | RCC-304RL-MS24F | VF-04 SR-04 | 14.0 |
| | | | RCC-306RL-MS24F | VF-06 SR-06 | 19.0 |
| | | | RCC-308RL-MS24F | VF-08 SR-08 | 24.4 |

For brake cable

| | | | | | |
|---|---|---|---|---|---|
| HA053CB - 33CB<br>HA100CB - 300CB | MS3106A10SL -4S (D190) | JA06A-10SL-4S -J1 | RCC-302RL-MS10F | VF-02 SR-02 | 8.3 |

For detector cable

| | | | | | |
|---|---|---|---|---|---|
| Encoder | MS3106A20-29S (D190) | JA06A-20-29S -J1 | RCC-304RL-MS20F | VF-04 SR-04 | 14.0 |
| | | | RCC-306RL-MS20F | VF-06 SR-06 | 19.0 |
| Absolute value encoder | MS3106A22-14S (D190) | JA06A-22-14S -J1 | RCC-304RL-MS22F | VF-04 SR-04 | 14.0 |
| | | | RCC-306RL-MS22F | VF-06 SR-06 | 19.0 |
| | | | RCC-308RL-MS22F | VF-08 SR-08 | 24.4 |

## For Flexible Conduit (Straight type)

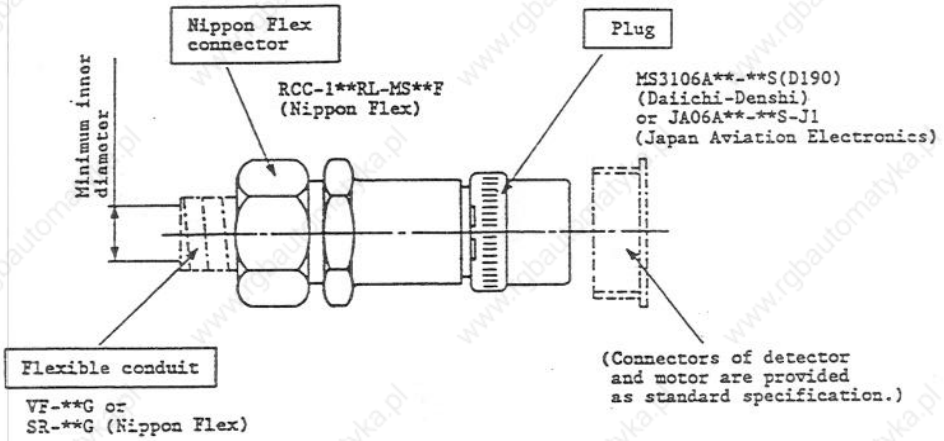


Note: The mate connector (receptacle) mounted on the motor can be used as the standard specification. The cable side connector is provided with a special specification.

### For motor connector

| Servo motor model name | Plug | | Nippon Flex connector | Flexible conduit | | |
|---|---|---|---|---|---|---|
| | Daiichi Denshi | Japan Aviation Electronis | Nippon Flex | Nippon Flex | | Minimum inner diameter |
| HA053C HA053CB<br>HA13C HA13CB<br>HA23C HA23CB<br>HA33C HA33CB | MS3106A18-12S (D190) | JA06A-18-12S -J1 | RCC-103RL-MS18F | VF-03 | SR-03 | 10.6 |
| | | | RCC-104RL-MS18F | VF-04 | SR-04 | 14.0 |
| | | | RCC-106RL-MS18F | VF-06 | SR-06 | 19.0 |
| HA40C HA40CB<br>HA80C HA80CB<br>HA43C HA43CB<br>HA83C HA83CB | MS3106A22-23S (D190) | JA06A-22-23S -J1 | RCC-104RL-MS22F | VF-04 | SR-04 | 14.0 |
| | | | RCC-106RL-MS22F | VF-06 | SR-06 | 19.0 |
| | | | RCC-108RL-MS22F | VF-08 | SR-08 | 24.4 |
| HA100C HA100CB<br>HA103C HA103CB<br>HA200C HA200CB<br>HA203C HA203CB<br>HA300C HA300CB | MS3106A24-10S (D190) | JA06A-24-10S -J1 | RCC-104RL-MS24F | VF-04 | SR-04 | 14.0 |
| | | | RCC-106RL-MS24F | VF-06 | SR-06 | 19.0 |
| | | | RCC-108RL-MS24F | VF-08 | SR-08 | 24.4 |

### For brake cable

| | | | | | | |
|---|---|---|---|---|---|---|
| HA053CB - 33CB<br>HA100CB - 300CB | MS3106A10SL-4S (D190) | JA06A-10SL-4S -J1 | RCC-102RL-MS10F | VF-02 | SR-02 | 8.3 |

### For detector cable

| | | | | | | |
|---|---|---|---|---|---|---|
| Encoder | MS3106A20-29S (D190) | JA06A-20-29S -J1 | RCC-104RL-MS20F | VF-04 | SR-04 | 14.0 |
| | | | RCC-106RL-MS20F | VF-06 | SR-06 | 19.0 |
| Absolute value encoder | MS3106A22-14S (D190) | JA06A-22-14S -J1 | RCC-104RL-MS22F | VF-04 | SR-04 | 14.0 |
| | | | RCC-106RL-MS22F | VF-06 | SR-06 | 19.0 |
| | | | RCC-108RL-MS22F | VF-08 | SR-08 | 24.4 |

# APPENDIX 3 MAIN CIRCUIT STRUCTURE

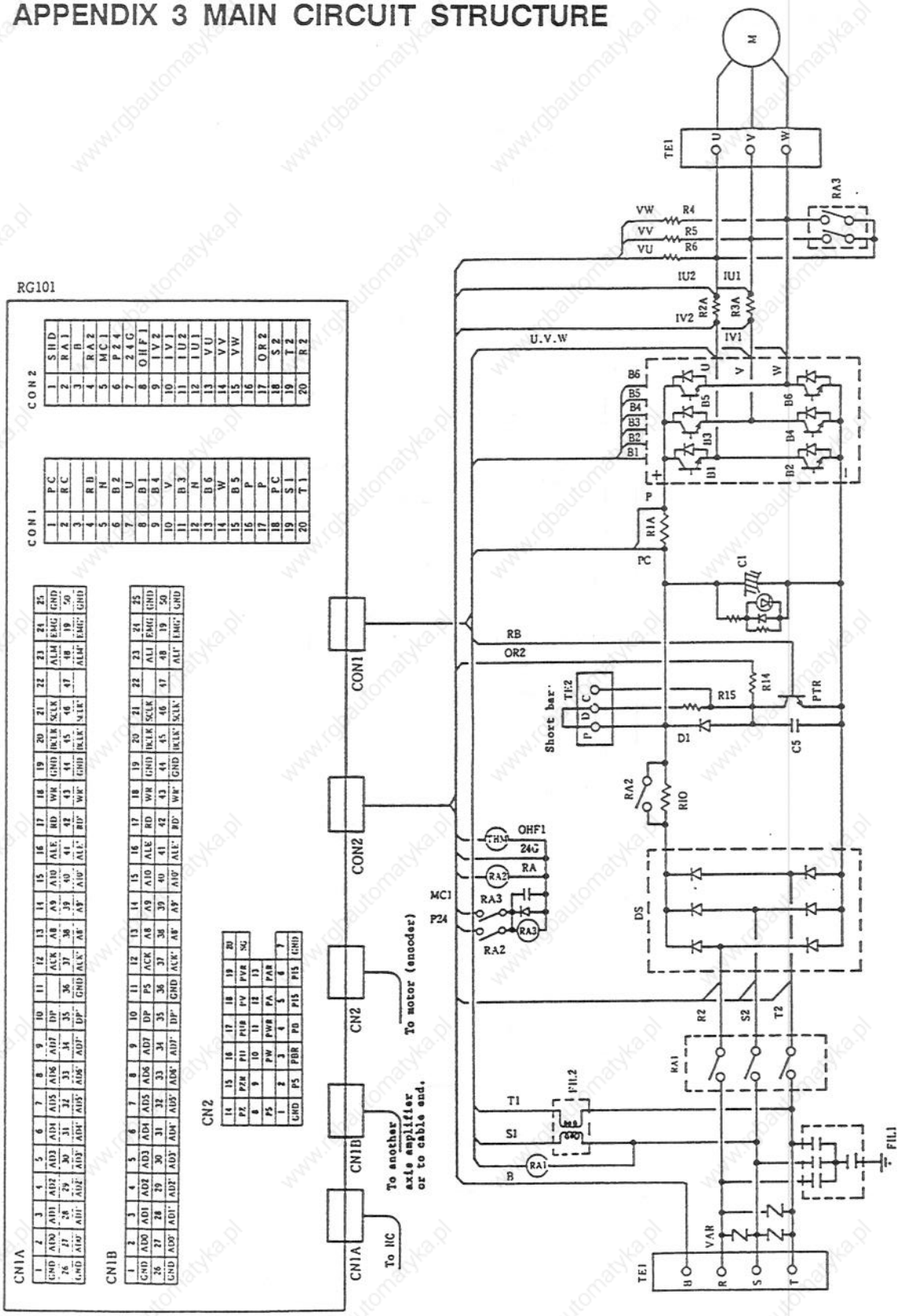

## Power Card (RG10/11) Layout

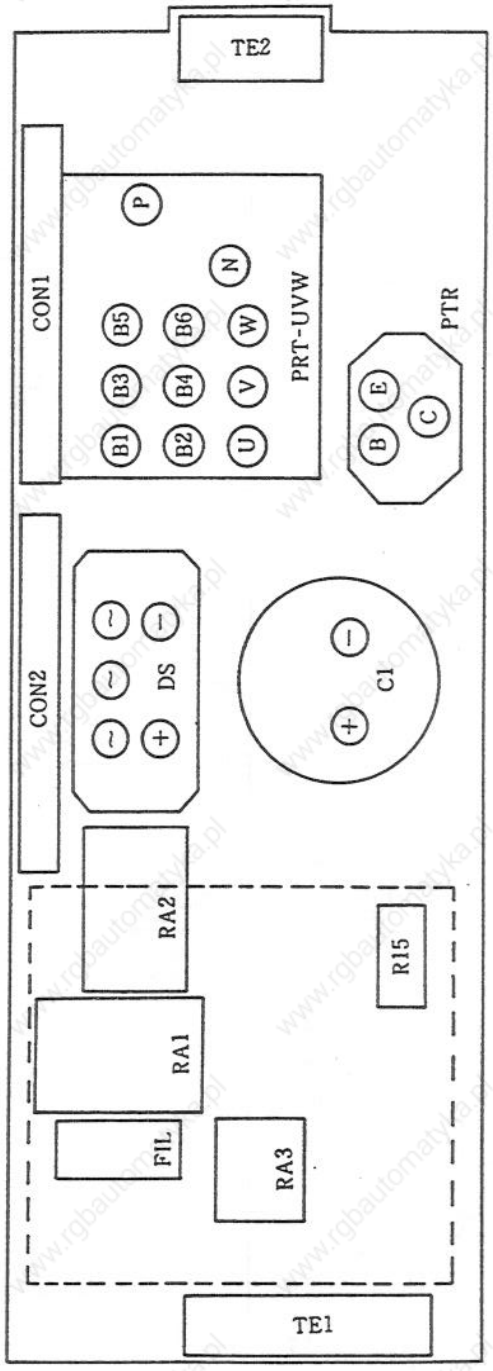

# APPENDIX 4 CHECKING MINIMUM ACCELERATION/ DECELERATION TIME CONSTANT

When the machine is accelerated or decelerated, because the motor output torque is restricted by the motor and the amplifier, the motor should be operated at the specified time constant or a higher time constant. When the time constant is too small, the error between the commanded value and the machine position becomes too large, resulting in an excessive error alarm.

(1) Checking minimum acceleration/deceleration time constant

The minimum acceleration/deceleration time constant is checked in accordance with the following chart, in the specified order:

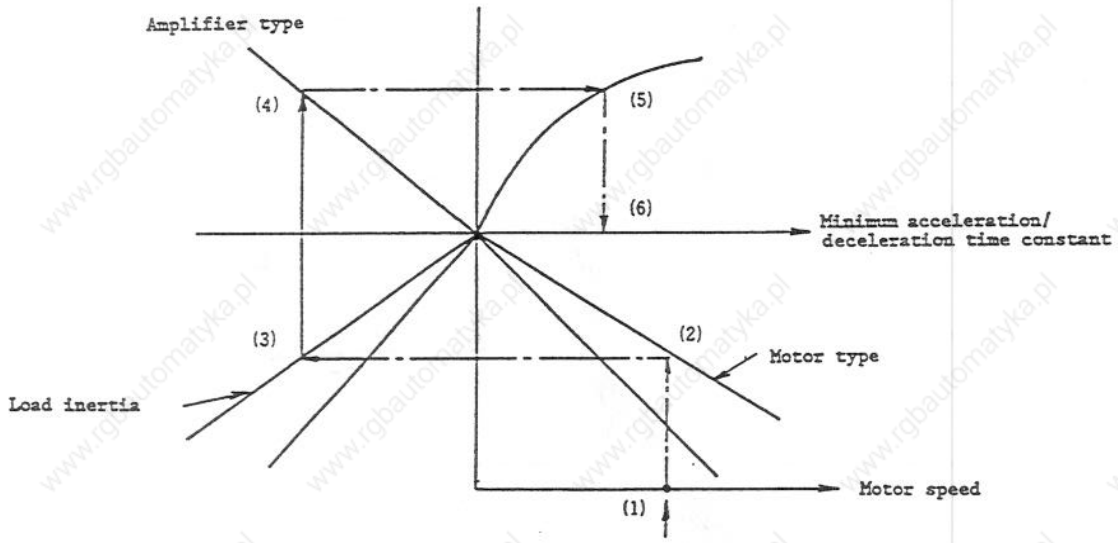


I) Determine the motor speeds in the rapid traverse speed and the cutting feed speed.
II) Select the motor type at (2).
III) Select the load inertia at (3).
IV) Select the inertia at (3).
V) Select the exponential function command or linear acceleration command and semi-closed type, closed type, or dual feedback type.
VI) (6) becomes the minimum acceleration/deceleration time constant. When the machine is actually operated, a value larger than the above value should be set.

APPENDIX 4
CHECKING MINIMUM ACCELERATION/
DECELERATION TIME CONSTANT

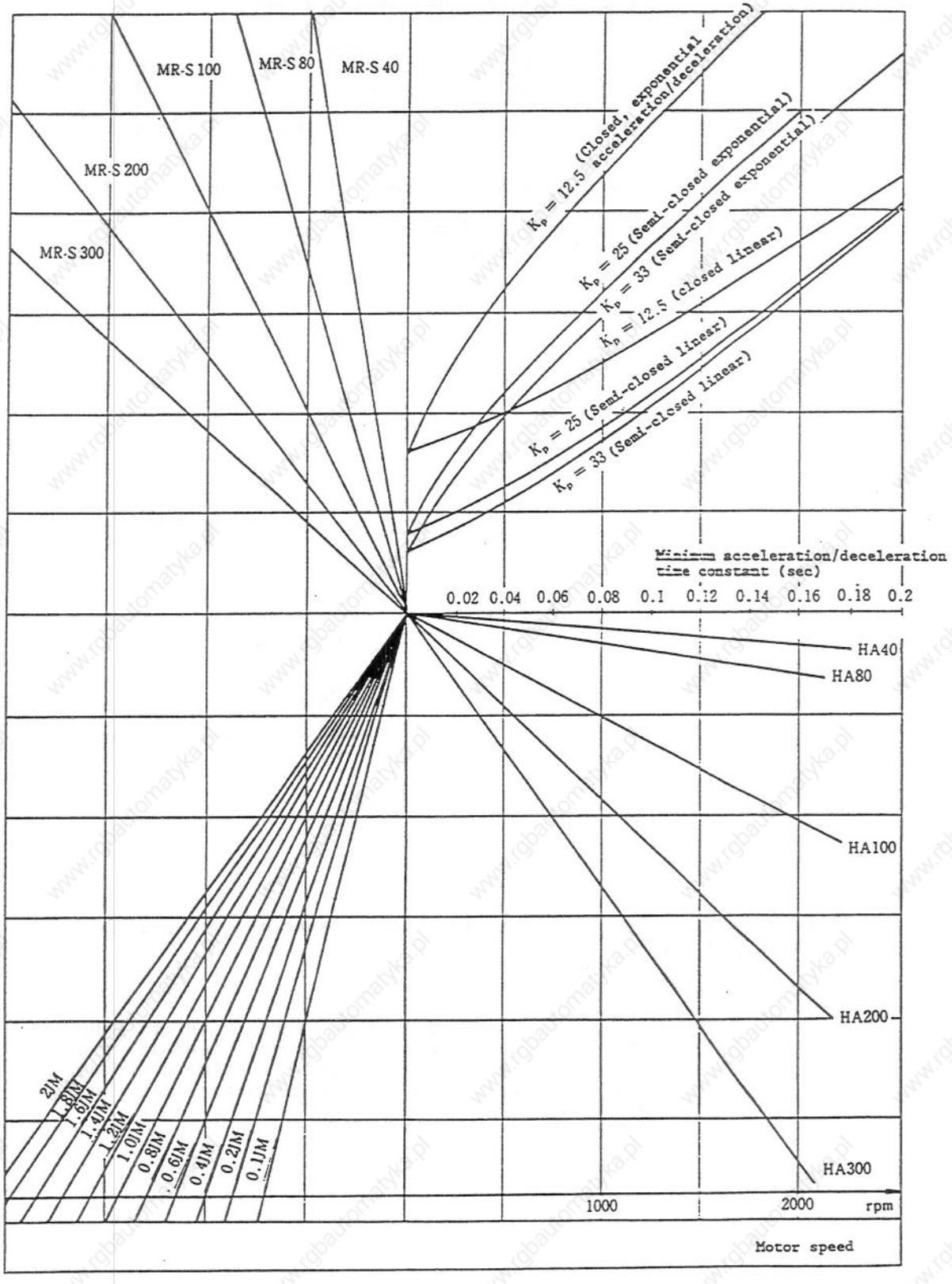

# APPENDIX 5 CHECKING POSITIONING REPEATABILITY

Since the motor generates regeneration energy while it is decelerated, the regeneration energy is consumed by a resistor built in the amplifier or an external regeneration resistor.
In a machine where the vertical axis is unbalanced, since the regeneration energy is large, the positioning repeatability is limited. It should be checked as follows:

(1) Checking the positioning repeatability

The positioning repeatability is performed in the order of the following chart.

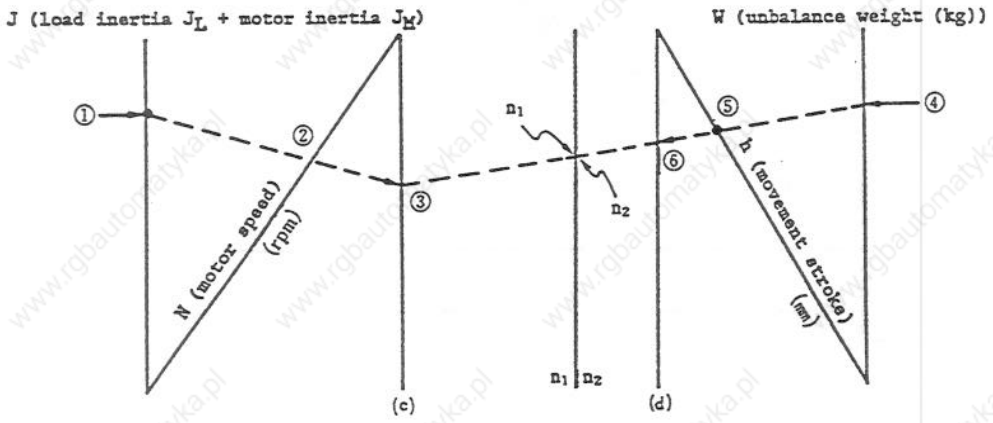


① Calculate the total value J, where the load inertia converted into motor shaft, and the motor inertia to be used, are added.
② Obtain the motor speed N ② in the rapid traverse state.
③ Obtain the intersection ③ of the extended line of ① and ② and the line (c).
④ Obtain the unbalance weight W ④ of the vertical axis.
⑤ Obtain the moving stroke (maximum value) h ⑤ of the vertical axis.
⑥ Obtain the intersection ⑥ of the extended line of ④ and ⑤ and the line (d).
⑦ Connect ③ and ⑥ where the intersection of the axes $n_1$ and $n_2$ becomes the value of the repeatability (times/min).

where
$n_1$: Repeatability of resistor built in MR-S1 amplifier
$n_2$: Repeatability where an external regeneration option resistor is connected.

(Note 1) The above repeatability $n_1$ and $n_2$ are restricted to $n_1$, $n_2$ = F/h times/min or less due to the rapid traverse speed F mm/min and the moving stroke (maximum value) h mm of the vertical axis.

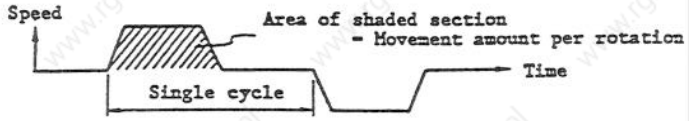

(2) Computation graphs (J = 0 - 0.56 kg·cm·sec²)

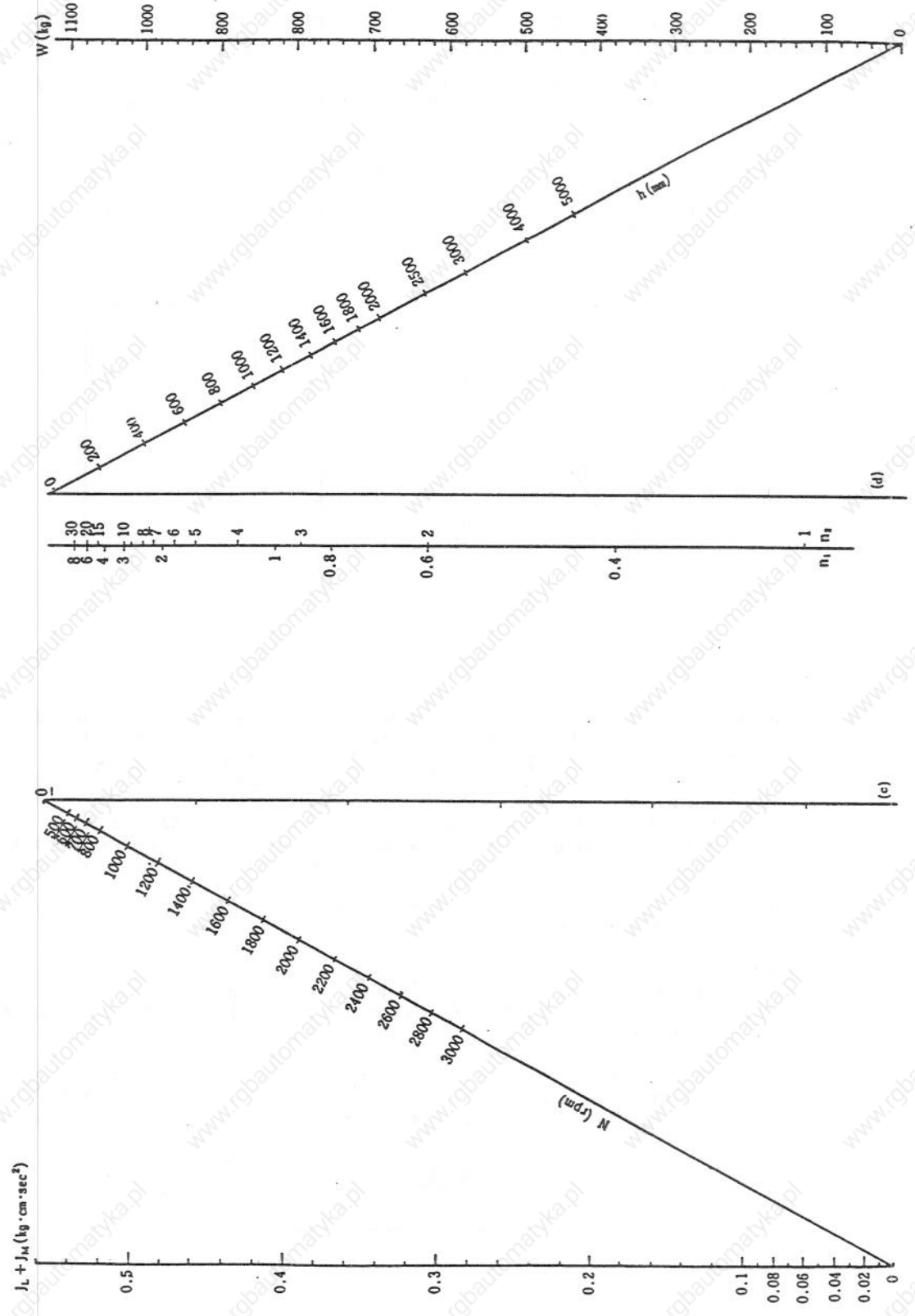

(3) Computation graphs (J = 0 - 0.28 kg·cm·sec²)

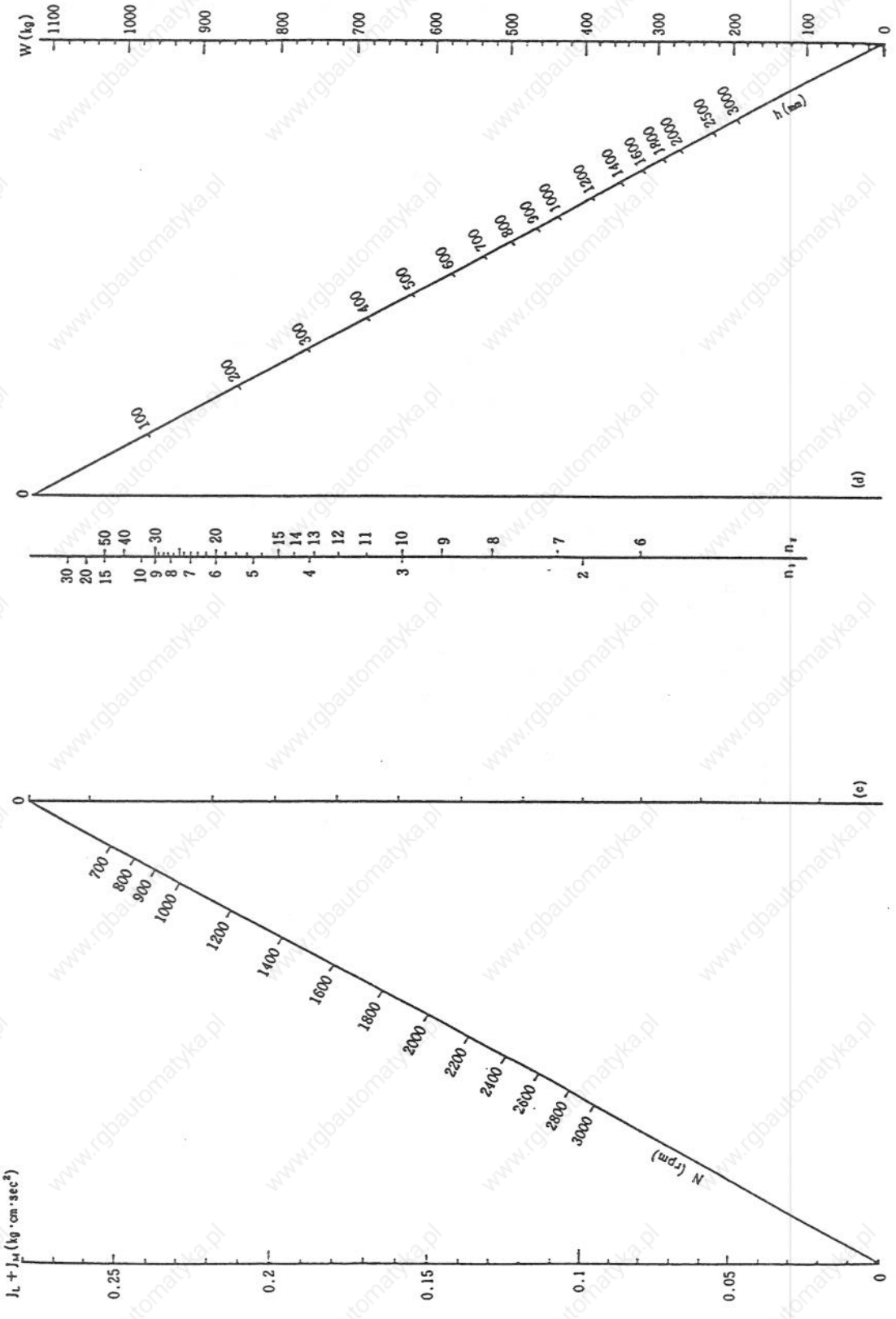

(4) Check method using calculation formula.
Check the positioning repeatability using the following formula.

$$n = \frac{120 \cdot Wg}{\frac{J}{100} \cdot \left(\frac{2\pi N}{60}\right)^2 \cdot g + w \cdot g \cdot \frac{h}{100} \cdot 0.8}$$

where n : Positioning repeatability (times/min)
J : Inertia converted into motor shaft (kg·cm·sec²)
$J = J_L + J_M$
$J_L$: Load inertia converted into motor shaft(kg·cm·sec²)
$J_M$: Motor rotor inertia (kg·cm·sec²)
N : Motor speed (rpm)
g : 9.8 m/sec²
W : Unbalance weight (kg)
When the frictional force is applied upward:
$W = W_H - W_f$
where $W_H$: Total weight of unbalance section (kg)
h : Total stroke of vertical axis (mm)
$W_R$ : Amount of regeneration resistance allowable heat generation (W)
When a resistance built in the MR-S amplifier is used: $W_R$=75W
When a regeneration option resistance is provided: $W_R$=250W

| Amplifier | Allowable heat dissipation ($W_R$) | |
|---|---|---|
| | Built-in resistance | Optional resistance |
| MR-S11 amplifier | 140 | 250 |
| MR-S12 amplifier | 140 | |
| MR-S1 (83 or less) | 100 | |
| MR-S1 (100 or more) | 140 | |
| MR-S2 (80A or less) | 100 | |
| MR-S2 (100B or more) | 140 | |

(Unit: W)

(5) External view of regeneration option resistance

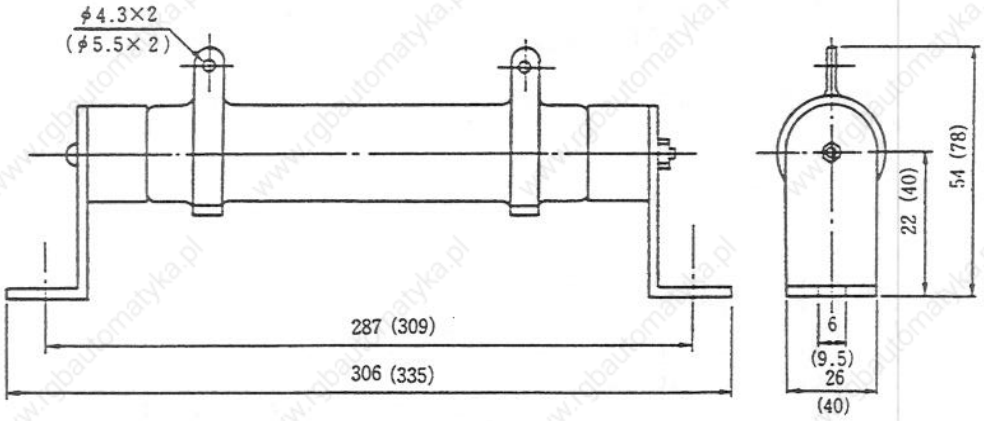


* The value in parentheses is the external dimensions of 7 kW option GZG 300 W, 20 OHM.

(Unit: mm)

| Resistance model | Rating power | Resistance | Remarks |
|---|---|---|---|
| GZG 200W390HNK | 200W | 39Ω | |
| GZG 200W200HM | 200W | 20Ω | Standard for 7 kW |
| GZG 300W200HM | 300W | 20Ω | Option for 7 kW |

# APPENDIX 6 CALCULATING COASTING AMOUNT IN EMERGENCY STOP

When the system detects an abnormality, the motor of the machine is stopped by a dynamic brake. The coasting amount of the machine can be obtained by the following formula.

$$L_{max} = \frac{F_{GO} \times 10^3}{60} \{0.03 + (AN^2 + B)(1 + \frac{J_L}{J_M}) \times 1.1\}$$

where

$L_{max}$ : Coasting amount of machine (mm)
$F_{GO}$ : Feed speed (rapid traverse) (m/min)
N : Motor speed (maximum speed) (rpm)
A : Coefficient (see the following table)
B : Coefficient (ditto)
$J_L$ : Load inertia converted into motor shaft (kg·cm·S²)
$J_M$ : Motor shaft rotor inertial (kg·cm·S²)

| Motor model | Motor inertial $J_M$ (kg·cm·S²) | Coefficients | |
|---|---|---|---|
| | | A | B |
| HA053 | $1.88 \times 10^{-4}$ | $0.86 \times 10^{-10}$ | $2.14 \times 10^{-2}$ |
| HA13 | $3.65 \times 10^{-4}$ | $1.02 \times 10^{-10}$ | $1.22 \times 10^{-2}$ |
| HA23 | 0.001 | $1.84 \times 10^{-10}$ | $1.06 \times 10^{-2}$ |
| HA33 | 0.002 | $2.67 \times 10^{-10}$ | $0.86 \times 10^{-2}$ |
| HA40 | 0.01 | $20.8 \times 10^{-10}$ | $1.15 \times 10^{-2}$ |
| HA43 | 0.01 | $17.9 \times 10^{-10}$ | $1.35 \times 10^{-2}$ |
| HA80 | 0.02 | $17.7 \times 10^{-10}$ | $0.98 \times 10^{-2}$ |
| HA83 | 0.02 | $14.4 \times 10^{-10}$ | $1.26 \times 10^{-2}$ |
| HA100 | 0.07 | $48.2 \times 10^{-10}$ | $1.67 \times 10^{-2}$ |
| HA103 | 0.07 | $38.7 \times 10^{-10}$ | $2.78 \times 10^{-2}$ |
| HA200 | 0.134 | $26.6 \times 10^{-10}$ | $2.27 \times 10^{-2}$ |
| HA203 | 0.134 | $12.5 \times 10^{-10}$ | $5.01 \times 10^{-2}$ |
| HA300 | 0.196 | $17.2 \times 10^{-10}$ | $3.11 \times 10^{-2}$ |
| HA700 | 0.259 | $12.5 \times 10^{-10}$ | $3.59 \times 10^{-2}$ |
| HA900 | 0.325 | $13.5 \times 10^{-10}$ | $4.26 \times 10^{-2}$ |

Note: $L_{max}$ deviates for ± 10% depending on the induced voltage coefficient.

# APPENDIX 7 SERVO MOTOR SPECIFICATIONS

(2000 rpm SPECIFICATION)

| Item \ Motor type | | | HA40 | HA80 | HA100 | HA200 | HA300 | HA700 | HA900 |
|---|---|---|---|---|---|---|---|---|---|
| Motor characteristics | Rating output | kW | 0.5 | 1.0 | 2.0 | 3.5 | 4.5 | 7 | 9 |
| | Rating torque | kgcm | 24.4 | 48.7 | 97.4 | 170 | 219 | 341 | 438 |
| | Stall torque | kgcm | 30 | 60 | 140 | 230 | 380 | 500 | 600 |
| Maximum torque with amplifier connected | | kgcm | 144 | 264 | 432 | 608 | 888 | 1216 | 1570 |
| Maximum speed | | rpm | 2000 | | | | | | |
| Motor inertia | Without brake | Jm kgcms$^2$ | 0.010 | 0.020 | 0.070 | 0.134 | 0.196 | 0.259 | 0.325 |
| | | GD$^2$ kgcm$^2$ | 39.2 | 78.4 | 274 | 525 | 768 | 1015 | 1274 |
| | With brake | Jm kgcms$^2$ | 0.011 | 0.021 | 0.074 | 0.138 | 0.200 | 0.263 | 0.329 |
| | | GD$^2$ kgcm$^2$ | 41.9 | 81.1 | 291 | 542 | 785 | 1032 | 1291 |
| Weight (including detector) | Without brake | kg | 8 | 12 | 21 | 32 | 43 | 56 | 79 |
| | With brake | kg | 10 | 14 | 27 | 38 | 49 | 62 | 81 |
| Equipped parts | Thermal protector | | Provided | | | | | | |
| | Shaft through-hole section oil seal | | Provided | | Provided/not provided (selectable) | | | Provided | |
| | Electromagnetic brake | | DC24V 15W 60kgcm | | DC24V 25W 200kgcm | | | | |
| | Cable connector | | Canon connector | | | | | Terminal box | |
| | Motor shaft end detector | | Detector model name should be specified (selectable). | | | | | | |
| Allowable shaft end radial load kg | | | 40 | | 210 | | | | |
| Operating environment | | | Ambient temperature: 0 to 40°C, free from oil and water, no condensation | | | | | | |

(3000 rpm SPECIFICATION)

| Item \ Motor type | | | HA053 | HA13 | HA23 | HA33 | HA43 | HA83 | HA103 | HA203 |
|---|---|---|---|---|---|---|---|---|---|---|
| Motor characteristics | Rating output | kW | 0.05 | 0.1 | 0.18 | 0.3 | 0.5 | 1.0 | 2.0 | 3.5 |
| | Rating torque | kgcm | 1.63 | 3.25 | 5.8 | 9.7 | 16.3 | 32.5 | 65 | 114 |
| | Stall torque | kgcm | 2.5 | 5 | 7 | 12 | 30 | 60 | 140 | 230 |
| Maximum torque with amplifier connected | | kgcm | 6.0 | 12 | 22 | 34 | 103 | 198 | 408 | 564 |
| Maximum speed | | rpm | 3000 | | | | | | | |
| Motor inertia | Without brake | Jm kgcms$^2$ | 1.88 x10$^{-4}$ | 3.65 x10$^{-4}$ | 0.001 | 0.002 | 0.01 | 0.02 | 0.07 | 0.134 |
| | | GD$^2$ kgcm$^2$ | 0.74 | 1.43 | 3.92 | 7.84 | 39.2 | 78.4 | 274 | 525 |
| | With brake | Jm kgcms$^2$ | 2.04 x10$^{-4}$ | 3.81 x10$^{-4}$ | 0.0011 | 0.0021 | 0.011 | 0.021 | 0.074 | 0.138 |
| | | GD$^2$ kgcm$^2$ | 0.80 | 1.49 | 4.45 | 8.37 | 41.9 | 81.1 | 291 | 542 |
| Weight (including detector) | Without brake | kg | 1.1 | 1.5 | 3.5 | 4.5 | 8 | 12 | 21 | 32 |
| | With brake | kg | 1.6 | 2.0 | 4.5 | 5.5 | 10 | 14 | 27 | 38 |
| Equipped parts | Thermal protector | | Provided | | | | | | | |
| | Shaft through-hole section oil seal | | Provided | | | | | | Not provided | |
| | Electromagnetic brake | | DC24V 5.2W 4kgcm | | DC24V 7.4W 9kgcm | | DC24V 15W 60kgcm | | DC24V 25W 300kgcm | |
| | Cable connector | | Canon connector | | | | | | | |
| | Motor shaft end detector | | Detector model name need not be specified. | | Detector model name should be specified (selectable). | | | | | |
| Allowable shaft end radial load kg | | | 8 | | 20 | | 40 | | 210 | |
| Operating environment | | | Ambient temperature: 0 to 40°C, free from oil and water, no condensation. | | | | | | | |

Note (1) Motors not listed in the table are special specification models.
(2) The motor and the motor shaft end detector should be separately specified. However, they should be connected by Mitsubishi. The user should not connect and/or modify them.
(3) The directional relationship of motor Cannon connector and motor shaft end detector Cannon connector should be in accord with the requirements of paragraph 3.1.
(4) The motor is not provided with wiring side plugs and cables.
(5) For detailed data of motors with electromagnetic brake, see 1.2.2.

## HA motor main specification

| Maximum speed | | 2000 rpm | | | 3000 rpm | | | |
|---|---|---|---|---|---|---|---|---|
| Item \ Motor model | | HA40 HA80 | HA100 HA200 HA300 | HA700 HA900 | HA053 HA13 | HA23 HA33 | HA43 HA83 | HA103 HA203 |
| Oil seal | Presence | o | o | o | o | o | o | o |
| | Absence | × | o | × | × | × | × | o |
| Shaft end | Straight shaft | Δ | o | o | o | o | Δ | o |
| | Taper shaft | o | × | × | × | o | o | × |
| Electro-magnetic brake | Presence | o | o | o | o | o | o | o |
| | Absence | o | o | o | o | o | o | o |
| Connection type | Cannon connector | o | o | × | o | o | o | o |
| | Terminal box | Δ | Δ | o | × | × | Δ | Δ |

o : Standard product  Δ : Special product  × : No specification

Note: When the oil-proofness is required, it is necessary to specify the Cannon connector type and the motor with oil seal. For the cable mating connector, use the Nippon Flex oil-proof connector (see III 2.2.3).

# APPENDIX 8 DETECTOR SPECIFICATIONS

| Item | Type | Model | Maximum speed (rpm) | Power | Detector output | Application type of output signals |
|---|---|---|---|---|---|---|
| Motor shaft end detector | Standard encoder | OSE5X-6-12-108<br>OSE5XN-6-12-108 | 3000 | DC5V +0.25V -0.5V | A phase, B phase 5000 P/R | Machine position detection (after 4 times multiplication, 20000 P/R) |
| | | | | | Z phase 1 P/R | Zero point indexing |
| | | | | | U phase, V phase W phase 2 P/R | Motor magnetic polarity detection |
| | | HA053/13 Encoder built in motor | 3000 | DC5V +0.25V -0.5V | A phase, B phase 2500 P/R | Machine position detection (after 4 times multiplication, 20000 P/R) |
| | | | | | Z phase 1 P/R | Zero point indexing |
| | | | | | U phase, V phase W phase 2 P/R | Motor magnetic polarity |
| | Ultra accurate encoder | OAER15X-1 x-3-3-108 | 1200 | DC5V +0.25V -0.5V DC±15V ±1.5V | A phase, B phase 25000 P/R | Machine position detection (after 4 times multiplication, 10000 P/R) |
| | | | | | Z phase 1 P/R | Zero point indexing |
| | | | | | 1 x resolver | Motor magnetic polarity detection |
| | Absolute value encoder | OAER5X-1 x-3-3-108 | 3000 | DC5V +0.25V -0.5V | A phase, B phase 5000 P/R | Machine position detection (after 4 times multiplication, 20000 P/R) |
| | | | | | Z phase 1 P/R | Zero point indexing |
| | | | | | 1 x resolver | Motor magnetic polarity detection, absolute value detection |
| | | | | | LA phase, LB phase 1 P/R | Absolute value of several rotation (Max. 32000 rev) |
| Ball screw end detector | Encoder | OSE5XN-ET -3--9.52-0 | 3000 | DC5V +0.25V -0.5V | A phase, B phase 5000 P/R | Machine position detection (after 4 times multiplication, 20000 P/R) |
| | | | | | Z phase 1 P/R | Zero point indexing |
| | Absolute value encoder | OAER5X-1x-ET -3-9.52-0 | 3000 | DC5V +0.25V -0.5V | A phase, B phase 5000 P/R | Machine position detection (after 4 times multiplication, 20000 P/R) |
| | | | | | Z phase 1 P/R | Zero point indexing |
| | | | | | 1 x resolver | Absolute value detection |
| | | | | | LA phase, LB phase 1 P/R | Absolute value of several rotation (Max. 32000 rev) |
| Inductosyn system (reference)<br>• Made by Mitsubishi Heavy Industry See note (4).<br>• Instruction Manual No.I-134 (November 1985) | | | 30 m/min | Single 100/ 110V | A phase, B phase 0.004 mm/P | Machine position detection (after 4 times multiplication, 0.001 mm/P) |
| | | | | | Z phase 2 mm/P | Zero point indexing (grid width = 2 mm) |

Note (1) For the performance of the servo system, see paragraph 1.2.
(2) When the detector is exposed to oil and/or water, a special specification type should be used.
(3) The detector is not provided with plugs and cables on the wiring side. For details, see III paragraph 2.2.3.
(4) Inductosyn system = INDUCTOSYN, IPA (one preamplifier/axis), A/D converter (resolution: 1/2000, 1 to 3 axis type), accessories (plugs, etc. on wiring side) should be purchased from the maker.

# APPENDIX 9 SERVO AMPLIFIER SPECIFICATIONS (MR-S11)

| Item | Unit | MR-S11 -33 | MR-S11 -40 | MR-S11 -80 | MR-S11 -100 | MR-S11 -103 | MR-S11 -200 | MR-S11 -300 | MR-S11 -700 | MR-S11 -900 |
|---|---|---|---|---|---|---|---|---|---|---|
| Applicable motor | | HA 23/33 | HA 40/43 | MR-S11 -80/83 | HA100 | HA103 | HA200 | HA 203/300 | HA700 | HA900 |
| Output voltage | Vrms | 155 | | | | | | | | |
| Continuous output current | Arms | 2.2 | 10 | | 15 | 22 | 22 | 37 | 47 | 56 |
| Maximum output current | Arms | 7.1 | 17 | 28 | 42 | 57 | 57 | 85 | 113 | 144 |
| Maximum output torque (when connected with amplifier) | kg•cm | 22/39 | 144/ 103 | 206/ 196 | 428 | 410 | 609 | 569/ 892 | 1220 | 1570 |
| Control method | - | Sine wave PWM system | | | | | | | | |
| Main circuit method | - | Transistor inverter | | | | | | | | |
| Braking | - | Regeneration brake and dynamic brake (in emergency stop state) | | | | | | | | |
| Allowable load inertia | - | Equal to or less than 2.5 times motor inertia | | | | | | | | |
| Allowable environmental temperature | °C | 0° to 55°C | | | | | | | | |
| Allowable environmental relative humidity | % | 90% or less (no condensation) | | | | | | | | |
| Storage temperature | °C | -15°C to 70°C | | | | | | | | |
| Storage relative humidity | % | 90% or less | | | | | | | | |
| Atmosphere | - | No harmful gas or dust | | | | | | | | |
| Allowable vibration | G | 5 to 10 Hz, amplitude 2.5 mm<br>10 to 30 Hz, 1G<br>30 minutes for each of X, Y, and Z directions | | | | | | | | |
| Allowable shock | G | Acceleration: 5G for 10 to 12 mS | | | | | | | | |
| Maximum heat generation | W | See paragraph 1.5. | | | | | | | | |
| Weight | kg | 11 | 11 | 11 | 11 | 11.5 | 11.5 | 11.5 | 18 | 25 |
| Power capacity | kVA | See paragraph 1.5. | | | | | | | | |
| Allowable power voltage | V | 200/220V +10% -15% 3-phases | | | | | | | | |
| Torque limit range | % | 0 to 100% | | | | | | | | |
| Position loop gain | $sec^{-1}$ | 10 to 100 $sec^{-1}$ | | | | | | | | |

Note (1): For details of the regeneration resistance, see paragraph 3.2
The regeneration resistors of MR-S11-700/900 are separately provided.
For details, see paragraph 3.2.2.

## Specifications of servo amplifier (MR-S12)

| Item | Unit | MR-S12 -13A | MR-S12 -33A | MR-S12 -40A | MR-S12-80B | | MR-S12 -80A | MR-S12-100B | | MR-S12 -100A |
|---|---|---|---|---|---|---|---|---|---|---|
| Applicable motor | | HA 053/13 | HA 23/33 | HA40 | HA80 | HA40 | HA80 | HA100 | HA80 | HA100 |
| Output voltage | Vrms | 155 | | | | | | | | |
| Continuous output current | Arms | 1.1 | 2.2 | 10 | 10 | 10 | 10 | 15 | 10 | 15 |
| Maximum output current | Arms | 3.3 | 7.1 | 17 | 28 | 17 | 28 | 42 | 28 | 42 |
| Max. output torque (When connected with amplifier) | kg·cm | 6/12 | 22/39 | 144 | 260 | 144 | 260 | 428 | 260 | 428 |
| Control method | - | Sine wave PWM system | | | | | | | | |
| Main circuit method | - | Transistor inverter | | | | | | | | |
| Braking | - | Regenerative brake and dynamic brake (at emergency stop) | | | | | | | | |
| Allowable load inertia | - | 2.5 times or less of motor inertia | | | | | | | | |
| Allowable environmental temperature | °C | 0°C to 55°C | | | | | | | | |
| Allowable environmental relative humidity | % | 90% or less (condensation not permissible) | | | | | | | | |
| Storage temperature | °C | -50°C to -70°C | | | | | | | | |
| Storage relative humidity | % | 90% or less | | | | | | | | |
| Atmosphere | - | Free from toxic gas, dust | | | | | | | | |
| Allowable vibration | G | 5 to 10 Hz Amplitude 2.5 mm<br>10 to 30 Hz 1G<br>30 min for each direction of X, Y or Z | | | | | | | | |
| Allowable shock | G | Acceleration 5G, 10 to 12 mS | | | | | | | | |
| Maximum heat generation | W | See paragraph 1.5. | | | | | | | | |
| Weight | kg | 10 | | | | | | | | |
| Power capacity | kVA | See paragraph 1.5. | | | | | | | | |
| Allowable power voltage | V | 200/220V +10% -15% 3 phases | | | | | | | | |
| Torque limit range | % | 0 to 100% | | | | | | | | |
| Position loop gain | $sec^{-1}$ | 10 to 100 $sec^{-1}$ | | | | | | | | |

Note (1) For details of regenerative resistor, refer to paragraph 3.2.

HISTORY OF PAST REVISIONS/AMENDMENTS

| Suffix | Month/Year | Revision or amendment |
|---|---|---|
| A | Jan., 1990 | (1) "MR-S12 Maintenance Manual" was added to "MR-S11 Maintenance Manual".<br>(2) The description of the servo amplifier maximum output torque was changed.<br>(3) Other errors were corrected. |
| B | June, 1990 | (1) A troubleshooting against alarm of power ON timing failure of a detector which requires a external power supply was added to 4.2.1(9) "Alarm No.21 No Signal 2" of 4.2 "Trouble-shooting".<br>(2) An encoder Z phase waveform of the RG101 card was corrected in the "6 H/W Check Method".<br>(3) The description of allowable heat dissipation of a regeneration resister was revised in Appendix 5 "Checking Repetitive Positioning Frequency".<br>(4) Other errors were corrected. |

©1996 MITSUBISHI ELECTRIC CORPORATION

ALL RIGHTS RESERVED

www.rgbautomatyka.pl

MITSUBISHI ELECTRIC CORPORATION
HEAD OFFICE MITSUBISHI DENKI BLDG MARUNOUCHI TOKYO 100 TEL: 03-3218-3426

**NOTICE:** These products/technologies are subject to U.S. regulations and/or COCOM strategic restrictions; diversion contrary thereto is prohibited.

Printed in U.S.A.

New publication, effective November 1997.
Specifications subject to change without notice.