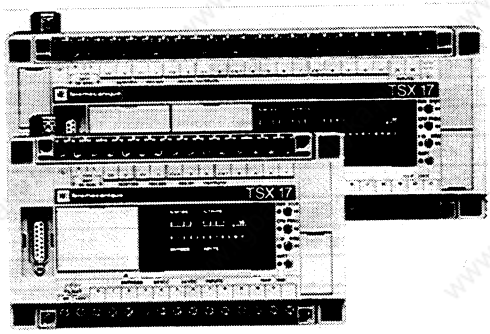

TSX 17-10
20/34/40 I/O
24 VDC inputs
relay/transistor outputs
PL7-1 language

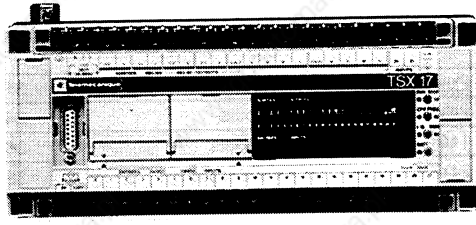

TSX 17-20
20/34/40 I/O
24 VDC/110 VAC inputs
relay/transistor outputs
PL7-1 or PL7-2 languages

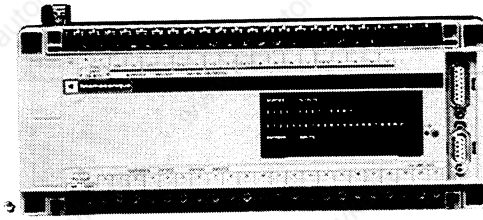

Extension block
30/40 I/O
24 VDC/110 VAC inputs
relay/transistor outputs

Discrete I/O extension module
- 6 24 VDC/110 VAC inputs
- 6 relay/triac/transistor outputs

Extension modules
4 analog inputs/2 analog outputs
4 analog timers
Uni-Telway Bus

Contents

TSX 17 Micro-PLC Installation Manual

Section	Sub-section		Page
1. Planning the Installation	1.1	TSX 17 Micro-PLC Description	4
	1.2	Discrete I/O Extension Blocks	13
	1.3	Discrete I/O Extension Modules	16
	1.4	Mains Power Break/Return	17
	1.5	Catalog Information (Accessories)	19
	1.6	Specific I/O	20
	1.7	PL7-2 Software Cartridges	20
	1.8	Saving Programs and Data	21
	1.9	I/O Addressing	24
2. Mounting	2.1	Building a Configuration	25
	2.2	Configuration Examples	26
	2.3	Basic PLC/Extension Compatibility	28
	2.4	Dimensions	29
	2.5	Mounting Considerations	30
3. Wiring	3.1	Power Supplies	31
	3.2	24VDC Inputs, Relay Outputs	34
	3.3	110VAC Inputs, Relay Outputs	36
	3.4	24VDC Inputs, Transistor Outputs	38
	3.5	Extension Module I/O	42
	3.6	2 and 3-Wire Detector Connection Examples	43
	3.7	Event Triggered Inputs	44
	3.8	Fast Counter	45
	3.9	Wiring the I/O	46

Contents

TSX 17 Micro-PLC Installation Manual

Section	Sub-section	Page
4. Setting into Service - Maintenance	4.1 Initial Power-up Procedure	47
	4.2 Checking the I/O Connections	48
	4.3 Troubleshooting Using the Indicator Lights	49
5. Technical Characteristics	5.1 Power Supply Characteristics	51
	5.2 Discrete Input Characteristics	51
	5.3 TSX 17-20 Event Triggered and Fast Counting Input Characteristics	52
	5.4 Discrete Output Characteristics	53
	5.5 Compatibility with Telemecanique Sensors	56
	5.6 Compatibility with Telemecanique Actuators	58
6. Service Conditions	6.1 Standards	59
	6.2 Environment - Normal Service Conditions	59
	6.3 Reliability	60
	6.4 Safety - System Availability	61
7. Appendix	7.1 Isolation Transformer Equipped Power Supply	62
	7.2 TSX 17 ACC2 Display	63

1 Planning the Installation

1.1 TSX 17 Micro-PLC Description

Basic TSX 17-10 Micro-PLC, TSX 171 2028

20 discrete I/O, 24VDC inputs, relay outputs. AC power supply.

This system comprises:

- a 110/240VAC power supply ① that provides a 24VDC, 250mA sensor supply output ②,
- a processor unit with a programming port ③ and a status display ④,
- 8K bytes of internal RAM program memory, that can be battery backed-up. The battery is located in ⑤ and has a 1 year service life,
- a location ⑥ for a plug-in EEPROM or EPROM memory cartridge for saving user programs,
- 20 discrete I/O (12 isolated 24VDC inputs ⑦, 8 relay outputs ⑧) with a front panel status display ⑨,
- a 9-pin I/O bus extension connector ⑩,
- 2 removable terminal blocks with protected screws ⑪,
- a ground connector ⑫.

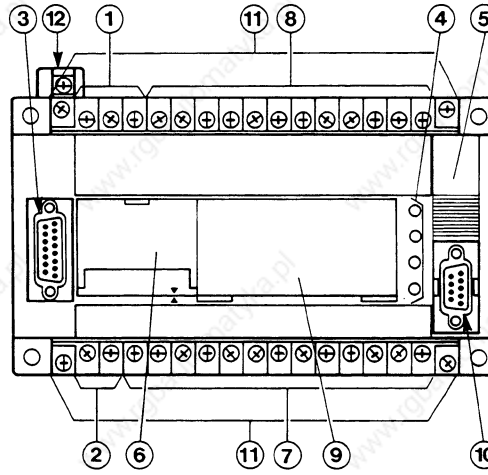

TSX 17 Micro-PLC Description (Cont'd)

Basic TSX 17-10 Micro-PLC, TSX 171 3428

34 Discrete I/O, 24VDC inputs, relay outputs. AC power supply.

This system comprises:

- a 110/240VAC power supply ① that provides a 24VDC, 250mA sensor supply output ②
- a processor unit with a programming port ③ and a status display, ④
- 8K bytes of internal RAM program memory that can be battery backed-up. The battery is located in ⑤ and has a 1 year service life,
- a location ⑥ for a plug-in EEPROM or EPROM memory cartridge for saving user programs,
- 34 discrete I/O (22 isolated 24VDC inputs ⑦, 12 relay outputs ⑧ with a front panel status display ⑨,
- a 9-pin I/O bus extension connector ⑩,
- 2 removable terminal blocks with protected screws ⑪,
- a ground connector ⑫,

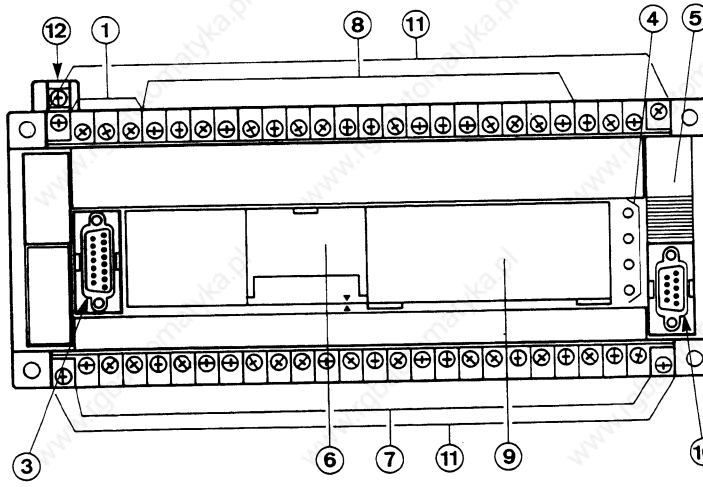

TSX 17 Micro-PLC Description (Cont'd)

Basic TSX 17-10 Micro-PLC, TSX 171 2002

20 discrete I/O, 24VDC inputs, transistor outputs. DC power supply

This system comprises:

- a 24VDC power supply ①,
- a processor unit with a programming port ③ and a status display ④,
- 8K bytes of internal RAM program memory, that can be battery backed-up. The battery is located in ⑤ and has a 1 year service life,
- a location ⑥ for a plug-in EEPROM or EPROM memory cartridge for saving user programs,
- 20 discrete I/O with a front panel status display ⑨,
  - 12 inputs 24VDC not isolated ⑦,
  - 8 transistor outputs ⑧ not isolated or protected against shorting, providing 2 different output levels:
    points 0 and 1 (2 outputs): 2 amps,
    points 2 to 7 (6 outputs): 1 amp,
- a 9-pin I/O bus extension connector ⑩,
- 2 removable terminal blocks with captive screw-terminals ⑪,
- a ground connector ⑫.

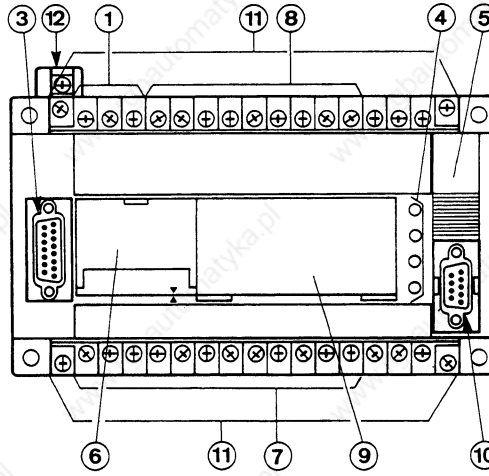

TSX 17 Micro-PLC Description (Cont'd)

Basic TSX 17-10 Micro-PLC, TSX 171 4002

40 discrete I/O, 24VDC inputs, transistor outputs. DC power supply.

This system comprises:

- a 24VDC power supply ①,
- a processor unit with a programming port ③ and a status display ④,
- 8K bytes of internal RAM program memory, that can be battery backed-up. The battery is located in ⑤ and has a 1 year service life,
- a location ⑥ for a plug-in EEPROM or EPROM memory cartridge for saving user programs,
- 40 discrete I/O with a front panel status display ⑨,
  - 24 inputs, 24VDC not isolated ⑦,
  - 16 transistor outputs ⑧ not isolated or protected against shorting, providing 2 different output levels:
    points 0 to 3 (4 outputs): 2 amps,
    points 4 to 15 (12 outputs): 1 amp,
- a 9-pin I/O bus extension connector ⑩,
- 2 removable terminal blocks with captive screw-terminals ⑪,
- a ground connector ⑪.

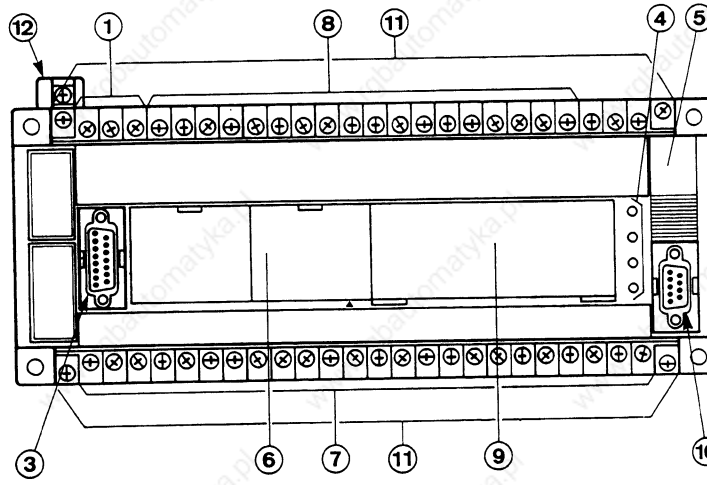

TSX 17 Micro-PLC Description (Cont'd)

Basic TSX 17-20 Micro-PLC, TSX 172 2028 - TSX 172 3428

20 or 34 Discrete I/O, 24VDC inputs, relay outputs. AC power supply.

These systems comprise:

- a 110/240VAC power supply ① that provides a 24VDC, 250mA supply output ② for sensors connected to the TSX 17,
- a processor unit with programming port ③ and status display ,
- an internal 24K byte RAM program memory (and 2K bytes of data in PL7-2 language), that can be battery backed-up. The battery is located in ⑤ and has a 1 year service life,
- a location ⑥ for a plug-in EEPROM or EPROM memory cartridge for saving user programs,
- a location ⑭ for a PL7-2 software cartridge. This optional cartridge is required if the user wishes to program in PL7-2 language. To connect the TSX T407 terminal to the TSX 17 programming port a TSX 17 ACC7 line adapter unit is also required,
- 20 or 34 discrete I/O with a front panel status display ⑨,

PLC	24VDC isolated inputs ⑦' ⑦	Relay outputs ⑧' ⑧
TSX 172 2028	12	8
TSX 172 3428	22	12

- a 9-pin I/O bus extension connector ⑩,
- 2 removable terminal blocks with captive screw-terminals ⑪,
- a ground connector ⑮,
- 2 event-triggered inputs ⑫ (24VDC inputs),
- a 2 KHz fast counter/timer ⑬, with counter and reset inputs (5/24VDC inputs).

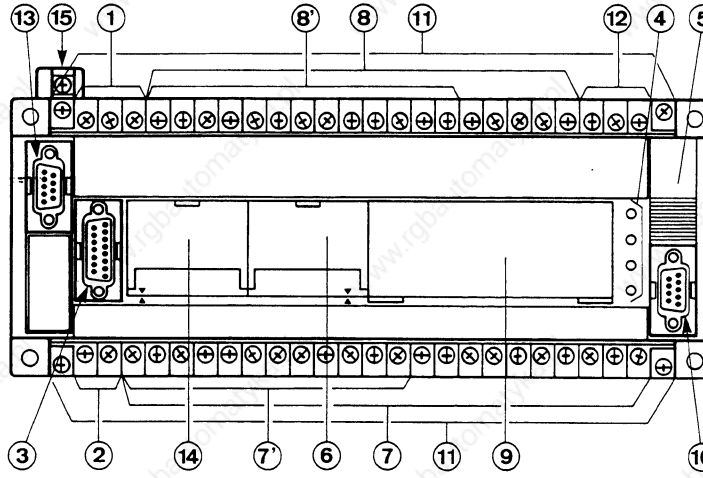

TSX 17 Micro-PLC Description (Cont'd)

Basic TSX 17-20 Micro-PLC, TSX 172 2044 - TSX 172 3444

20 or 34 Discrete I/O, 110VAC inputs, relay outputs. AC power supply.

These systems comprise:

- a 110/240VAC power supply ① that provides a 24VDC, 250mA supply output ② for sensors connected to the TSX 17,
- a processor unit with programming port ③ and status display ④,
- an internal 24K byte RAM program memory (and 2K bytes of data in PL7-2 language), that can be battery backed-up. The battery is located in ⑤ and has a 1 year service life,
- a location ⑥ for a plug-in EEPROM or EPROM memory cartridge for saving user programs),
- a location ⑭ for a PL7-2 software cartridge. This optional cartridge is required if the user wishes to program in PL7-2 language. To connect the TSX T407 terminal to the TSX 17 programming port a TSX 17 ACC7 line adapter unit is also required,
- 20 or 34 discrete I/O with front panel status display ⑨,

PLC	110VAC isolated inputs ⑦' ⑦	Relay outputs ⑧' ⑧
TSX 172 2044	12	8
TSX 172 3444	22	12

- a 9-pin I/O bus extension connector ⑩,
- 2 removable terminal blocks with captive screw-terminals ⑪,
- a ground connector ⑮,
- a common 110VAC input supply terminal ⑯,
- 2 event-triggered fast inputs ⑫ (24VDC inputs),
- a 2KHz fast counter/timer ⑬, with counter and reset inputs (5/24VDC inputs).

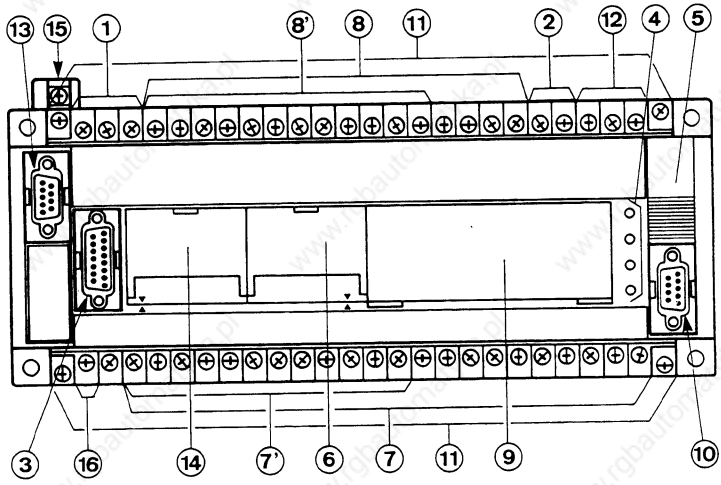

TSX 17 Micro-PLC Description (Cont'd)

Basic TSX 17-20 Micro-PLC, TSX 172 2012 - TSX 172 4012

20 or 40 Discrete I/O, 24VDC inputs, transistor outputs. DC power supply.

These systems comprise:

- a 24VDC power supply ①,
- a processor unit with programming port ③ and status display ④,
- an internal 24K byte RAM program memory (and 2K bytes of data in PL7-2 language), that can be battery backed-up. The battery is located in ⑤ and has a 1 year service life,
- a location ⑥ for a plug-in EEPROM or EPROM memory cartridge for saving user programs),
- a location ⑭ for a PL7-2 software cartridge. This optional cartridge is required if the user wishes to program in PL7-2 language. To connect the TSX T407 terminal to the TSX 17 programming port a TSX 17 ACC7 line adapter unit is also required,
- 20 or 40 discrete I/O with front panel status display ⑨,

PLC	24VDC isolated inputs ⑦' ⑦	0.35A isolated and protected transistor outputs ⑧' ⑧
TSX 172 2012	12	8
TSX 172 4012	24	16

- a 9-pin I/O bus extension connector ⑩,
- 2 removable terminal blocks with captive screw-terminals ⑪,
- a ground connector ⑮,
- 2 event-triggered fast inputs ⑫ (24VDC inputs),
- a 2KHz fast counter/timer ⑬, with counter and reset inputs (5/24VDC inputs).

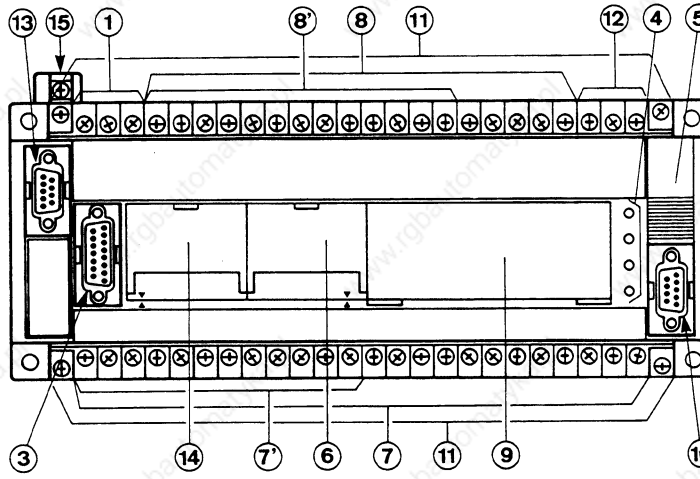

TSX 17 Micro-PLC Description (Cont'd)

PLC status display

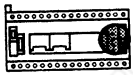

The results of the background self-tests that are run continually by the basic PLC units are displayed on the front panel by four LED indicators.

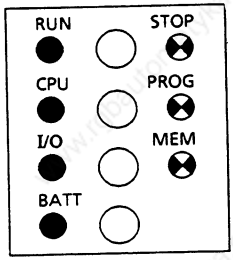

● Indicator on	⊗ Indicator blinking
PLC running	PLC stopped
CPU fault	Program watchdog fault
I/O fault	RAM memory fault
Battery fault	

I/O status display

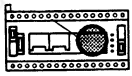

In addition to providing a continuous display of the status of the inputs, two output status display functions are also available, depending on the state of system bit SY14 and on the programming language used.

State of SY 14	PL7-1 language	PL7-2 language
0 (default state)	Display the status of the outputs.	
1	Display the state of internal bits: B248 to B255 on TSX 171 2028/2002 B240 to B255 on TSX 171 4002 - TSX 172 2012/4012/171 3428 TSX 172 2028/3428 TSX 172 2044/3444	Display the contents of word SW16 on TSX 172 2012/4012 TSX 172 2028/3428 TSX 172 2044/3444

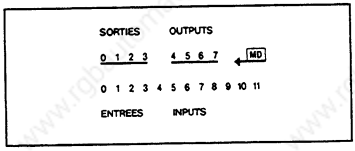

TSX 171 2028/2002

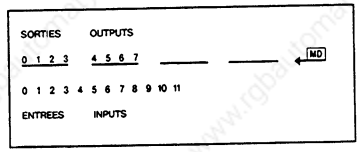

TSX 172 2012/2028/2044

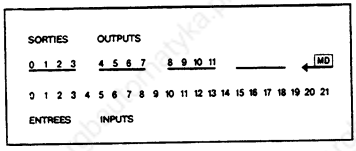

TSX 171 3428 - TSX 172 3428/3444

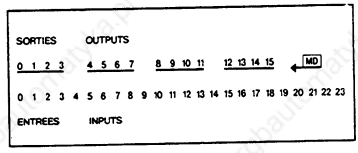

TSX 171 4002 - TSX 172 4012

TSX 17 Micro-PLC Description (Cont'd)

I/O status display (cont'd)

Elements displayed	Status SY14 (1)	Language	0 1 2 3	4 5 6 7	8 9 10 11	12 13 14 15
Outputs	**0**	**PL7-1** **PL7-2**	O0,00--	O0,04--	O0,08--	O0,12--
Internal bits	1	**PL7-1**	B255--	B251--	B247--	B243--
Word SY16	1	**PL7-2**	4th nibble	3rd nibble	2nd nibble	1st nibble

(1) The state of system bit SY14 is displayed on the front panel by the MD indicator:
SY14 = 0 MD indicator off (state taken by default),
SY14 = 1 MD indicator on.

TSX 17 ACC 2 - Digital display module for use with the basic TSX 17-20 PLC, for PL7-2 language programming

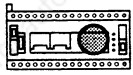

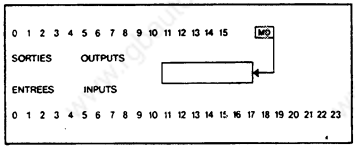

This display module is plugged in as a direct replacement for the standard display module fitted to the TSX 17-20. In addition to the I/O status display, this module comprises a 4 digit BCD display showing the content of word SW 16, if SY 14 = 1.

Depending on the program, the content displayed can be the value of a counter, timer, step number, etc. (refer to the example in sub-section 7-2).

SY 14 status	4 digit display	Output status display
0	**Inactive**	**Active**
1	**Active**	**Inactive**

Fitting the display module

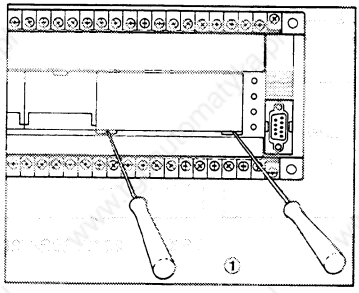

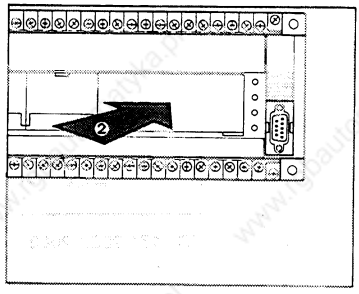

① Use a screwdriver to remove the original display unit.

② Insert the digital display unit and press down firmly.

These steps should only be performed with the PLC powered-down.

1.2 Discrete I/O Extension Blocks

TSX DMF 342 A extension block

34 discrete I/O, 24VDC inputs, relay outputs. AC power supply.

This extension block comprises:

- a 110/240VAC power supply ① that provides a 24VDC, 250mA sensor supply output ②,
- 34 discrete I/O with a front panel status display ⑤,
  - 22 isolated 24VDC inputs ③,
  - 12 relay outputs ④,
- an I/O bus connection or extension block fault LED ⑩,
- a 15-pin I/O bus input connector ⑥,
- a 9-pin I/O bus output connector ⑦,
- 2 removable terminal blocks with captive screw-terminals ⑧,
- a ground connector ⑨,

Maximum extension configurations:

- 2 extension blocks on a TSX 17-10 or TSX 17-20 using PL7-1 language,
- 3 extension blocks on a TSX 17-20 using PL7-2 language.

Refer to the compatibility rules on page 28.

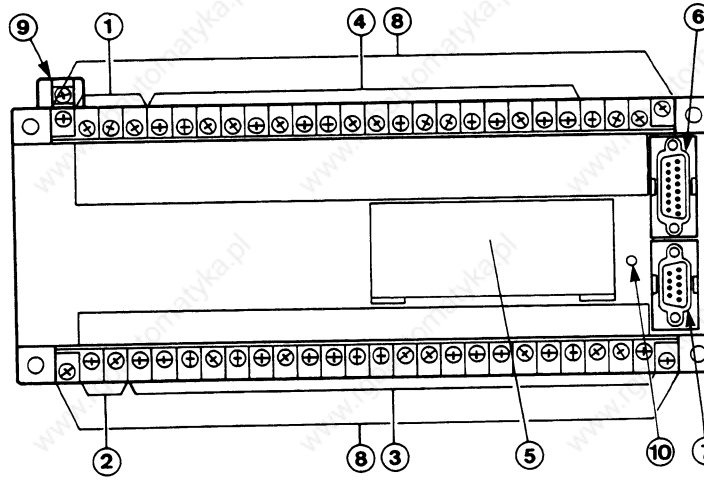

Discrete I/O Extension Blocks (Cont'd)

TSX DMF 344 A extension block

34 discrete I/O, 110VAC inputs, relay outputs. AC power supply.

This extension block comprises:

- a 110/240VAC power supply ① that provides a 24VDC, 250mA sensor supply output ②,
- 34 discrete I/O with a front panel status display ⑤,
  - 22 isolated 110VAC inputs ③,
  - 12 relay outputs ④,
- an I/O bus connection or extension block fault LED ⑩,
- a 15-pin I/O bus input connector ⑥,
- a 9-pin I/O bus output connector ⑦,
- 2 removable terminal blocks with captive screw-terminals ⑧,
- a ground connector ⑨,
- a common 110VAC input supply terminal ⑪,

Maximum extension configurations:

- 2 extension blocks on a TSX 17-10 or TSX 17-20 using PL7-1 language,
- 3 extension blocks on a TSX 17-20 using PL7-2 language.

Refer to the compatibility rules on page 28.

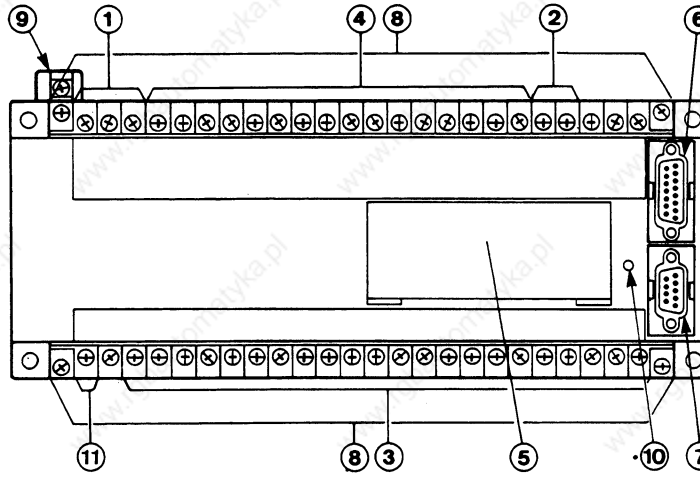

Discrete I/O Extension Blocks (Cont'd)

TSX DMF 400 - TSX DMF 401 extension blocks

40 discrete I/O, 24VDC inputs, transistor outputs. DC power supply.

These extension blocks comprise:

- two screw terminals for connecting a 24VDC power supply input ①,
- 40 discrete I/O with a front panel status display ⑤,

Extension blocks	24 VDC inputs ③		Transistor outputs ④	
	not isolated	isolated	not isolated not protected 1 & 2A	isolated protected 0.35A
TSX DMF 400	24	–	16 ①	–
TSX DMF 401	–	24	–	16

(1) points 0 to 3 (4 outputs): 2 amps,
points 4 to 15 (12 outputs): 1 amp.

- an I/O bus connection or extension block fault LED ⑩,
- a 15-pin I/O bus input connector ⑥,
- a 9-pin I/O bus output connector ⑦,
- 2 removable terminal blocks with captive screw-terminals ⑧
- a ground connector ⑨.

Maximum extension configurations:

- 2 extension blocks on a TSX 17-10 or TSX 17-20 using PL7-1 language,
- 3 extension blocks on a TSX 17-20 using PL7-2 language.

Refer to the compatibility rules on page 28.

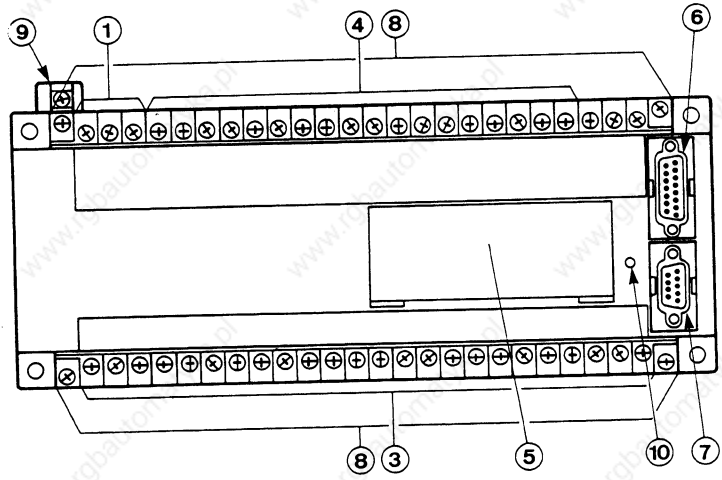

1.3 Discrete I/O Extension Modules

Extension modules - 8 discrete inputs or 6 discrete outputs

TSX DEF 812 - TSX DEF 804 input modules

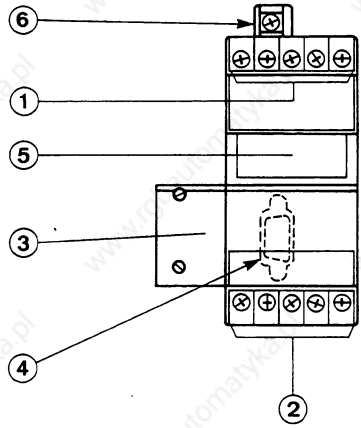

These modules comprise:

- 8 isolated 24VDC inputs ① and ② with a front panel status display ⑤,

Modules	Isolated inputs	
	24VDC	110VAC
TSX DEF 812	8	–
TSX DEF 804	–	8

- a 9-pin I/O bus input connector and its cable ③ to connect to the previous module,
- a 9-pin I/O bus output connector and its cable ④ to connect to the next module,
- a ground connector ⑥,

Maximum extension configurations:

- 2 extension modules on a TSX 17-10 or TSX 17-20 using PL7-1 language,
- 3 extension modules on a TSX 17-20 using PL7-2 language,

Refer to the compatibility rules on page 28.

TSX DSF 635 - TSX DSF 612 - TSX DSF 604 Output modules

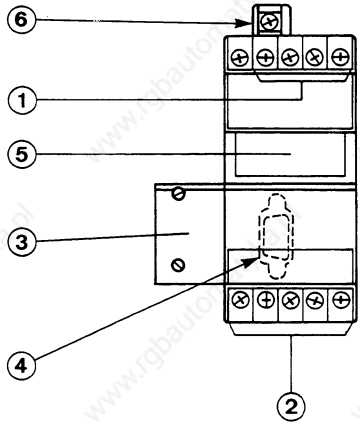

These modules comprise:

- 6 relay outputs ① and ② with a front panel status display ⑤,

Modules	Isolated outputs with		
	Relays	Transistors, (protected 0.35A)	Triacs
TSX DSF 635	6	–	–
TSX DSF 612	–	6	–
TSX DSF 604	–	–	6

- a 9-pin I/O bus input connector and its cable ③ to connect to the previous module,
- a 9-pin I/O bus output connector and its cable ④ to connect to the next module,
- a ground connector ⑥,

Maximum extension configurations:

- 2 extension modules on a TSX 17-10 or TSX 17-20 using PL7-1,
- 3 extension modules on a TSX 17-20 using PL7-2 language.

Refer to the compatibility rules on page 28.

1.4 Mains Power Break/Return

Consequences of a Mains Break

The effect of a mains power break/return on TSX 17 PLCs is described in the PL7-1 Summary (TSX D12011E) and PL7-2 Summary (TSX D12002E) manuals. The table below summarizes the consequences of a power break/return depending on:

- whether or not the processor monitors the sensor power supply,
- the duration of the power break. If the duration of the power break is less than the autonomy of the power supply module, the PLC will continue to execute its program normally and to acquire inputs and update outputs.

Depending on the type of power break/return, even if the context is coherent, the user should for application safety reasons, ensure that the processor has not received any wrong inputs caused by the power break. This situation can occur when the processor is still running on its own autonomy while power supply to sensors has been lost. The table below summarizes the various situations:

Basic PLC type	Sensor supply	PLC supply autonomy	Hot restart with input state errors
Type 1 24 VDC inputs, 110/240 VAC mains	Built-in and monitored by CPU bit Sx,1	10 to 50 ms at 110 V rated 20 to 50 ms at 220 V rated	No danger of input errors: sensor supply exceeds autonomy.
Type 2 24 VDC inputs, 24 VDC supply	Not built-in, but monitored by CPU bit Sx,1	10 to 35 ms at 24 V rated	Danger of errors occuring on loss of 24 VDC supply.
Type 3 110 VAC inputs, 110/220 VAC mains	Not built-in and not monitored by the CPU	35 to 80 ms at 110 V rated 50 to 75 ms at 220 V rated	Danger of error occuring on loss of 110 VAC supply.

Hot Restart with the Danger of Input Errors (Types 2 and 3)

On hot restart, the danger of input errors (input at 0 instead of 1 for example), is compatible with the level of safety required by the application. To avoid this danger, the PLC must be initialized at the start of its program by setting the cold restart bit SY00 to 1 and the output reset bit SY09 to 1. Refer to the examples on the next page.

Programming hint:
To limit the danger of input errors after a hot restart, ensure that the automated system is only triggered by inputs at 1 (on rising edge).

Mains Power Break/Return (Cont'd)

PL7-1 Hot Restart Programming (for Types 2 and 3)

```
S000  L SY01  if SY01 (hot restart), then set:
S001  S SY00  • SY00 to 1 to perform a cold restart,
S002  = SY09  • SY09 to hold the outputs at 0.
```

Bits SY00 and SY09 are reset to 0 by the system at the end of the next cycle.

PL7-2 Hot Restart Programming (for Types 2 and 3)

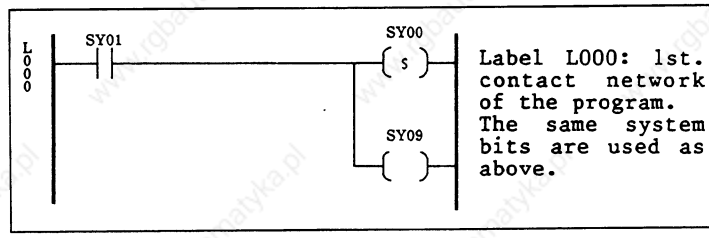

Consequences of a Cold Restart

- All internal bits and I/O bits are set to 0,
- Resetting to 0 of the current values of functions (PL7-1) and function blocks Ti,V, Mi,V, Ci,V etc. (PL7-2),
- Loss of function block values that had been modified by the terminal of the program. These blocks (Ti,P, Mi,P, Ci,P TXTi,x, etc.) return to their preset value defined in the configuration and (in PL7-2), internal words Wi and active time counters Xi,V and Di,V are reset to 0,
- Reinitialization of registers, step counters and drum controllers,
- Reinitialization the Grafcet (activation of initial steps),
- Cancellation of forced bits and breakpoints,
- Execution restarts at the start of the scan cycle (inputs, program, outputs) and SY00 is reset to 0 by the system.

Constant words CWi and real-time clock parameters are not changed.

Important: Industrial safety standards require that the restarting of the system after a mains power break, must be manually initiated by the operator. By slaving the power supplies as described previously, these standards can be met.

A cold restart usually requires returning the physical part of the application to its initial position (either manually of automatically). This procedure is not detailed in this manual.

1.5 Catalog Information (Accessories)

Intelligent Modules for TSX 17 Micro-PLCs

Ref. No.	Purpose	Manual	Language
TSX DTF 400	4 analog timers	TSX D12010E TSX D12005E	(PL7-1) (PL7-2)
TSX AEG 4110	4 ±10 V analog inputs	TSX D12005E	(PL7-2)
TSX AEG 4111	4 4-20 mA analog inputs	TSX D12005E	(PL7-2)
TSX ASG 2000	2 ±10 V analog outputs	TSX D12005E	(PL7-2)
TSX ASG 2001	2 4-20 mA analog outputs	TSX D12005E	(PL7-2)
TSX 17 ACC5	Uni-Telway (slave) adapter	TSX D24006E	(PL7-2)
TSX SCG 116 (under development)	Uni-Telway (master/slave) module	TSX D24007E	(PL7-2)
TSX SCG 113 (under development)	1 channel, asynchronous serial communication module	TSX D23009E	(PL7-2)

PL7-2 Software cartridge

Ref. No.	Function
TSX P17 20 FA(*)	Enables the programming of TSX 17-20 PLCs in PL7-2 programming language
TSX P17 20 FB(*)	Identical to TSX P17 20 FA with Clock/Calendar function

Memory storage

Ref. No.	Type	Storage
TSX MC70 E38	8K byte EEPROM (1K instructions in PL7-1)	User program
TSX MC70 E324	24K byte EEPROM (3K instructions in PL7-1)	User program
TSX MC70 E28	8K byte EEPROM (1K instructions in PL7-1)	User program
TSX MC70 E224 (*)	24K byte EEPROM (3K instructions in PL7-1)	User program
TSX 17 ACC1	Lithium battery 1 year service life(**)	User program, real-time clock/calendar

Cables and Accessories

Ref. No.	Type	Length
TSX CBB 003	Connection to DMF.. extension	0.32 meter
TSX CBB 009	Connection to DMF.. extension	0.90 meter
TSX CBB 016	Connection to DMF.. extension	1.60 meter
TSX CCB 020(*)	Fast counter connection cable	2 meter
TSX 17 ACC10	End of line adapter	

(*) For TSX 17-20 PLCs only,
(**) 2 year service life if the surrounding temperature does not exceed 40 degrees C.

1.6 Specific I/O

Input/Output: Run/Stop - Alarm

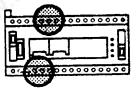

A feature of the TSX 17 basic PLC allows input I0,00 and output O0,00 to each be assigned a specific function.

Run/Stop input: I0,00

Normal (nor):	Operates in the same way as all other basic PLC discrete inputs.
Run/Stop (R/S):	• at 1 this input sets the PLC to Run, • at 0 this input sets the PLC to Stop.

The actual Run/Stop input on the PLC has priority over a Run/Stop from a connected terminal.

Alarm output: O0,00

Normal (nor):	Operates in the same way as all other basic PLC discrete inputs.
Alarm:	• at 1 if the PLC is Running with no faults, • at 0 if the PLC is Stopped or Running but a fault is present.

Output O0,00 is used for safety systems that are external to the PLC. It can be used to cut-off the power to PLC outputs (refer to Sub-section 3.1).

Configuration of the specific I/O

Input I0,00 and output O0,00 are configured by default to normal mode. These I/O can be configured separately and respectively for Run/Stop and Safety modes using the terminal (in Configuration mode).

1.7 PL7-2 Software Cartridges

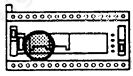

These cartridges can only be used in TSX 17-20 micro-PLCs and are required for PL7-2 language programming.

The user has a choice of two cartridges:

TSX P17 20 FA

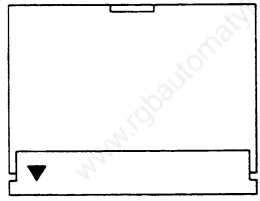

PL7-2 language only

TSX P17 20 FB

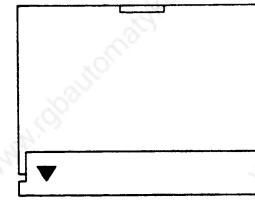

PL7-2 language
with Clock/Calendar function

Inserting the cartridge

Cartridges should only be inserted when the PLC is powered-down.

Remove the factory fitted slot cover and insert the cartridge, pressing it firmly home and close the removal tab/cover.

1.8 Saving Programs and Data

If a power break occurs, the contents of the RAM memory of the micro-PLC (program, data and clock/calendar information) is retained for at least 1 hour. There are three ways of saving this data for longer periods: EEPROM and EPROM memory cartridges and a lithium battery.

EEPROM memory cartridges

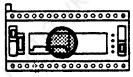

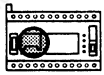

Ref. No.:	TSX MC70 E38	8K bytes
	TSX MC70 E324	24K bytes
Data storage life:	Permanent	
Type of data stored:	Program and configuration	

Installing the cartridge

Cartridges should only be inserted when the PLC is powered-down.

Remove the factory fitted slot cover and insert the cartridge, pressing it firmly home and closing the removal tab/cover.

- **Cartridge description:**

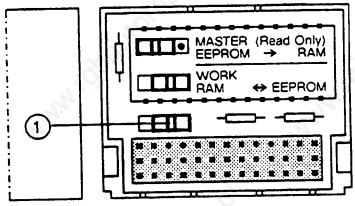

The user can select the required mode of operation by setting a two position micro switch ①:

- **Cartridge Write/Read**
  Set the micro switch ① to the Work position for use when debugging the program and writing to the cartridge.
- **Cartridge Read Only**
  Set the micro switch ① to the Master (Read Only) position to use a definitive stored program.

- **Write/Read mode:**

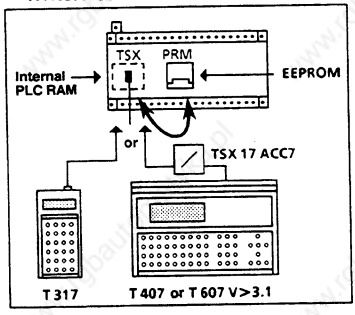

The transfer from the PLC RAM to EEPROM or from EEPROM to PLC RAM always takes place with the cartridge fitted in the PLC and the micro switch ① set to the Work position.

The transfer execution command is sent from a terminal in Transfer mode.

- **Using the cartridge to store a Program**

  Once the program has been transferred to the cartridge, move the micro switch ① left to the Master position.
  In this position, whenever a power return occurs, the content of the memory cartridge is automatically transferred to the RAM memory of the PLC, if the content of the PLC RAM is different from the EEPROM.

Note: The EEPROM memory comprises the configuration and the user program. Data is always stored in the RAM memory of the PLC.

Saving Programs and Data (Cont'd)

EEPROM memory cartridges

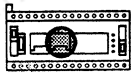

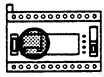

Ref. No.:	TSX MC70 E38	8K bytes
	TSX MC70 E324	24K bytes
Data storage life:	Permanent	
Type of data stored:	Program and configuration	

Installing the cartridge

Cartridges should only be inserted when the PLC is powered-down.

Remove the factory fitted slot cover and insert the cartridge, pressing it firmly home and closing the removal tab/cover.

Writing to the EPROM cartridge:

In PL7-1 language

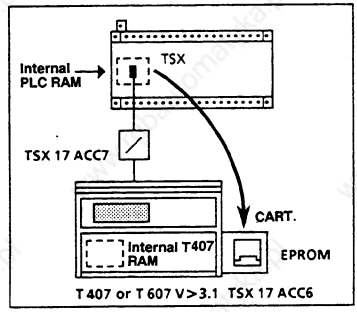

In PL7-2 language

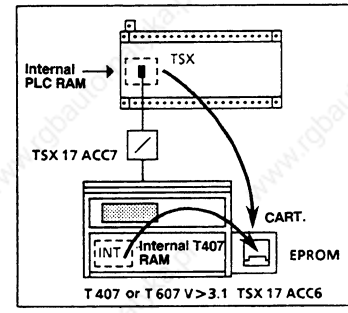

Transfer from the PLC RAM memory to the EPROM is always performed with the cartridge fitted in the TSX 17 ACC6 adaptor and controlled by the TSX T407 terminal in Transfer mode.

Reading from the EPROM cartridge:

With the cartridge fitted in the TSX 17 ACC6 adaptor and controlled by a terminal in Transfer mode.

PL7-1 language

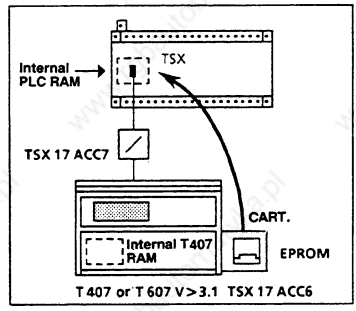

PL7-2 language

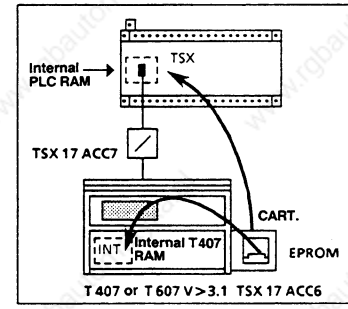

Saving Programs and Data (Cont'd)

With the cartridge fitted in the PLC, controlled by terminal in Transfer mode.

PL7-1 language

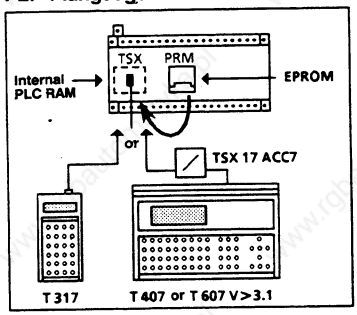

PL7-2 language

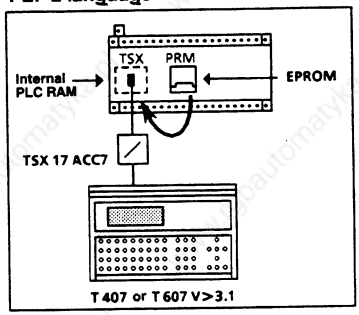

Reading programs stored in the cartridge:

Each time the PLC is powered-up (or on power return), the content of the memory cartridge is automatically transferred to the RAM memory of the PLC, if the content of the two memories are different.

Note:
- The EPROM memory is used to store the configuration and the user program. Data is always stored in the RAM memory of the PLC.
- An EPROM memory cartridge is erased using a TSX EPE1/EPE2 UV cartridge eraser.

Lithium battery

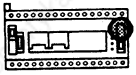

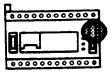

Ref. No.:	TSX 17 ACC1
Data storage life:	1 year(*)
Type of data stored:	Program, data and clock/calendar information.

(*) The battery life can be longer if the operating temperature ΘA is less than 40 deg. C (refer to the definition of ΘA on Page 6/1).

Installing the battery

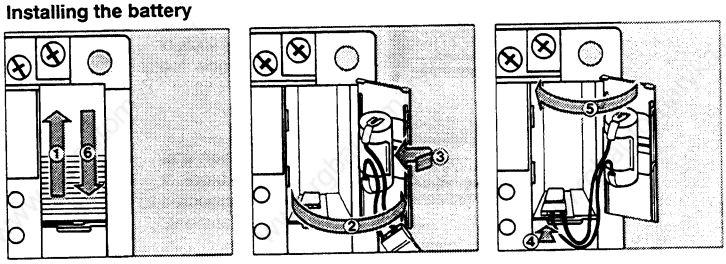

① Release the cover → ② Remove the cover → ④ Plug-in the battery → ⑤ Re-install the cover → ③ Fit the battery → ⑥ Lock the cover

1.9 I/O Addressing

I/O addressing

•Addressing a discrete input or output:

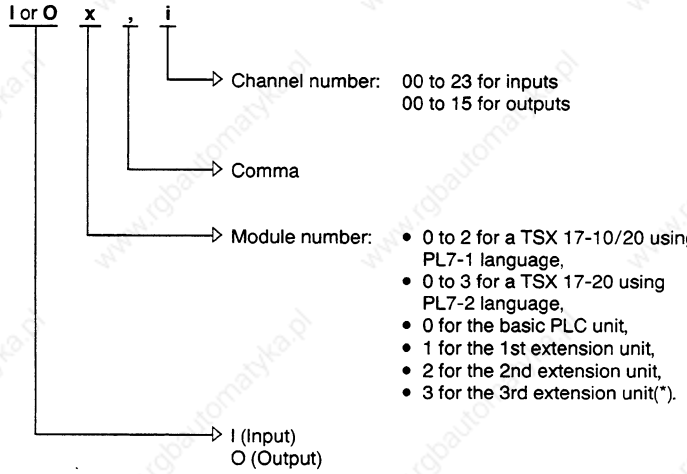

- Addressing the event triggered inputs IO,24 and IO,25, available on TSX 17-20.

Module identification in a TSX 17 configuration

Configuration examples:

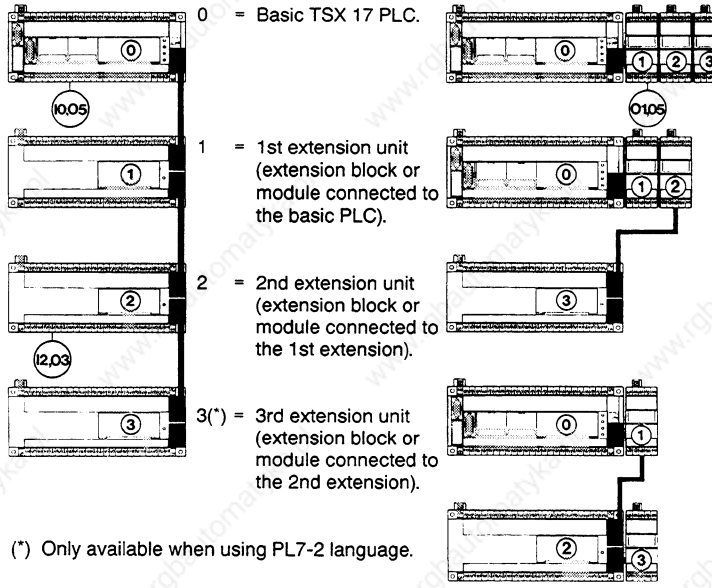

(*) Only available when using PL7-2 language.

2 Mounting

2.1 Building a Configuration

Basic rules

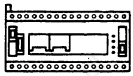

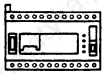

- The basic micro-PLCs can be expanded with:
  TSX 17-10/20, PL7-1 language: 1 or 2 discrete I/O extension blocks or modules,
- TSX 17-20, PL7-2 language: 1, 2 or 3 discrete I/O extension blocks or discrete I/O and analog modules and 1 Uni-Telway module.

Starting with the basic micro-PLC (address 0), discrete I/O and analog extension blocks or modules can be installed in any order.

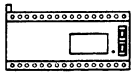

- Discrete I/O extension blocks: An extension block (address n) is connected to the preceding block or module (address n-1) by a connector cable selected for the installation.

Three different cables are available:

- TSX CBB 003: length 0.32 meters ("x" on Pages 26 and 27),
- TSX CBB 009: length 0.90 meters ("y" on Pages 26 and 27),
- TSX CBB 016: length 1.60 meters ("w" on Page 27).

Caution: The maximum length of the bus extension depends on the number of extensions to connect (refer to the table below for the cables to use).

Extension cables that can be used in a configuration		
With 1 ext. block	**With 2 ext. blocks**	**With 3 ext. blocks**
0.32 m	0.32 m +0.32 m	0.32 m +0.32 m +0.32 m
0.90 m	0.32 m +0.90 m	0.32 m +0.32 m +0.90 m
1.60 m	0.32 m +1.60 m	0.32 m +0.32 m +1.60 m
	0.90 m +0.90 m	0.32 m +0.90 m +0.90 m

- **Discrete I/O modules:** The extension module is connected to the preceding block or module by a built-in cable. Therefore, additional modules are always located to the right of the preceding device,

- **Analog extension and analog timer modules:** These are installed in the same way as discrete I/O modules.

- **Uni-Telway adapter module:** This adapter connects to the programming port of the PLC by a 0.90 meter cable (supplied with the adapter). It can be mounted in any position in relation to the basic PLC.

Building a Configuration (Cont'd)

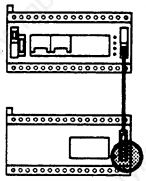

- **End of line adapter for extension blocks or modules.**

The last extension block or module must be fitted with an end of line adapter on the connector located at the lower right of the front panel.

The TSX 17 ACC 10 end of line adapter is supplied separately.

> **All cables** (except for the terminal cables) **should only be connected or disconnected with the PLC powered-down.**
>
> **The male connectors on the extension cables and the end of line adapter must be attached to the female connectors on the TSX 17 modules using their retaining screws.**

2.2 Configuration Examples

Example 1: TSX 17-10

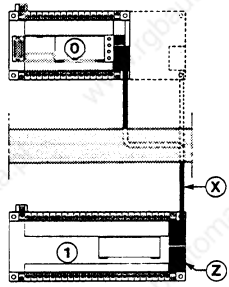

Example 2: TSX 17-20 - PL7-2

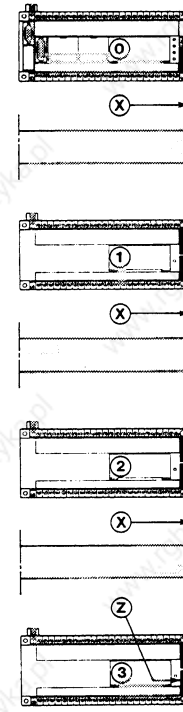

Example 3: TSX 17-10

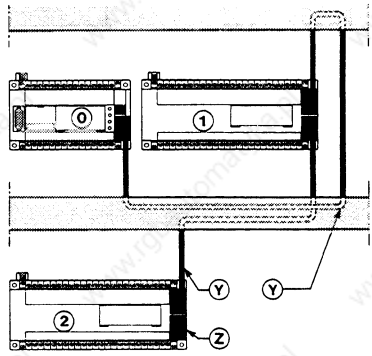

Configuration Examples (Cont'd)

Example 4: TSX 17-20 - PL7-2

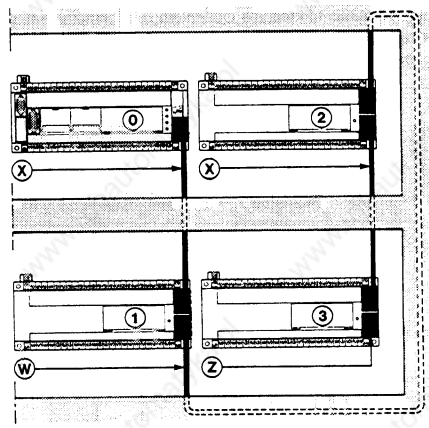

Example 5: TSX 17-20 - PL7-2

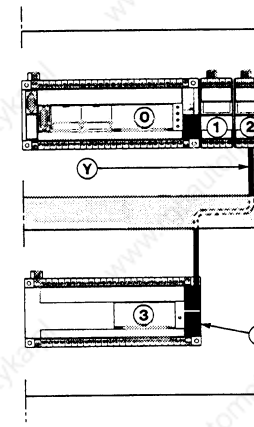

Example 6: TSX 17-20 - PL7-2

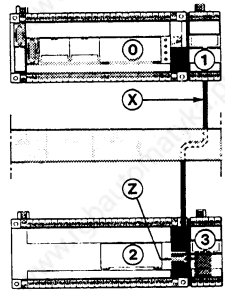

Example 7: TSX 17-20 - PL7-2

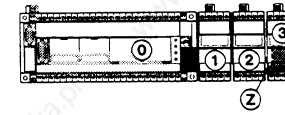

x = TSX CBB 003 cable, length 0.32 meters,

y = TSX CBB 009 cable, length 0.90 meters,

w = TSX CBB 016 cable, length 1.60 meters,

z = TSX 17 ACC 10 end of line adapter, supplied separately,

2.3 Basic PLC/Extension Compatibility

The TSX 17 compatibility table below shows which units and modules can be used together to build complete configurations. All configurations used must follow the guidelines given in the table to ensure optimum performance from all operational features. In addition, this ensures that isolation standards are met and power supply load levels not exceeded.

Basic micro-PLC	Language	Max. no. of extensions (1)	Discrete I/O ext. blocks			Discrete and analog I/O ext. modules						UNI TEL-WAY
			DMF			DEF	DSF		DTF	AEG	ASG	
			344A 342A	400	401	804 812	604 612	635	400.	411.	200.	ACC5
TSX 171 2028 TSX 171 3428	PL7-1	2	X		X	X	X	X	X			
TSX 171 2002	PL7-1	2	X	X	X	X	X		X			
TSX 171 4002	PL7-1	2	X	X	X	X	X		X			
TSX 172 2028 TSX 172 2044	PL7-1	2	X		X	X	X	X	X			
	PL7-2	3	X		X	X	X	X	X	X	X (4)	X (3)
TSX 172 2012	PL7-1	2	X		X	X	X	X	X			
	PL7-2	3	X		X	X	X	X	X	X	X	X (3)
TSX 172 3428 TSX 172 3444	PL7-1	2	X		X	X	X	X	X			
	PL7-2	3	X		X	X	X	X (2)	X	X	X (4)	X (3)
TSX 172 4012	PL7-1	2	X		X	X	X	X	X			
	PL7-2	3	X		X	X	X	X	X	X	X	X (3)

(1) Except for the TSX ACC 5 Uni-Telway communication module,

(2) The maximum number of TSX DSF 635 modules is restricted to 2,

(3) One module per basic PLC.

(4) The 24VDC sensor supply from the basic PLC can only be used to by one extension module. If more than one extension module is installed, an external 24VDC power supply must be used.

X	can be used together
	cannot be used together

2 Mounting

2.4 Dimensions

Basic PLCs

TSX 171 2028
TSX 171 2002

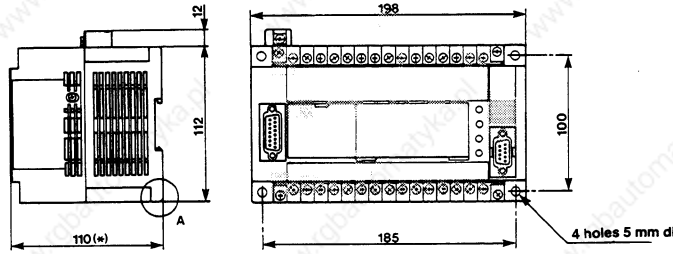

TSX 172 2028
TSX 172 2044
TSX 171 3428
TSX 172 3428
TSX 172 3444
TSX 172 2012
TSX 171 4002
TSX 172 4012

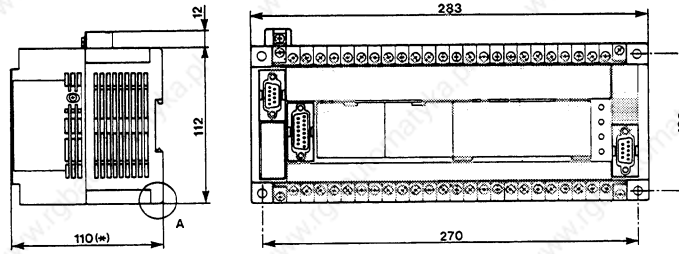

Extension blocks

TSX DMF 342A
TSX DMF 344A
TSX DMF 400
TSX DMF 401

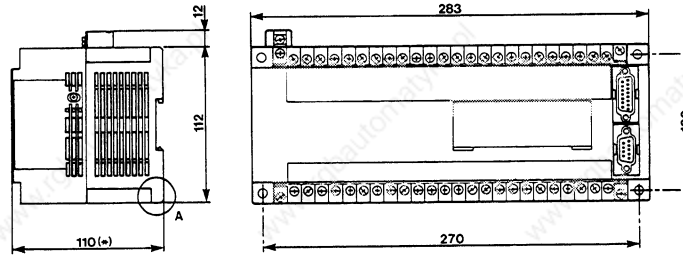

Extension modules

TSX DEF 804
TSX DEF 812
TSX DSF 604
TSX DSF 635
TSX DSF 612
TSX DTF 400
TSX AEG 41..
TSX ASG 20..
TSX 17 ACC5

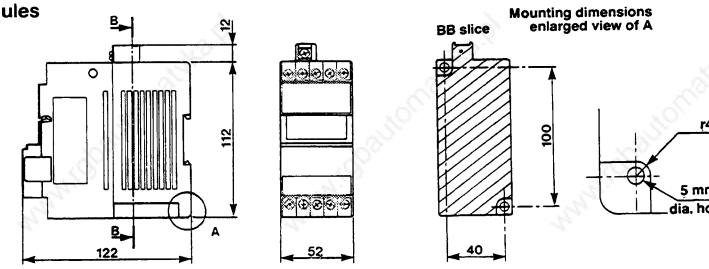

(*) 122 mm with connector (TSX CBB extension cable or TSX 17 ACC5 end of line adapter).

All dimensions given in mm.

2.5 Mounting Considerations

On AM1-BA slotted plate

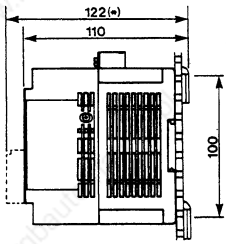

Mounting by ø4 screws

- M4 clip-on nut AF1-EA4 M4x16 AF1-VA416 screws with captive washer

(*) Dimensions of the basic PLC or extension block with TSX CBB ... cable. Dimensions of TSX DEF, DSF, DTF, AEG, ASG, 17 ACC5 modules.

On 2000 mm zinc-chromed rails

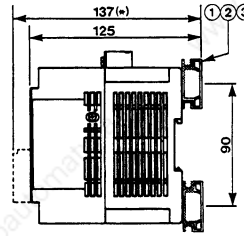

Mounting by ø4 screws

① 35 mm wide combined rail AM1-ED200 with nut AF1-CF34 and M4 x 16 screw AF1-VA416

② 35 mm wide omega rail AM1-DE200 with nut AF1-CG4 and M4 x 16 crew AF1-VA416

③ 32 mm asymmetrical rail DZ5-MB201 with nut DZ5-ME8 and M4 x 16 screw AF1-VA416.

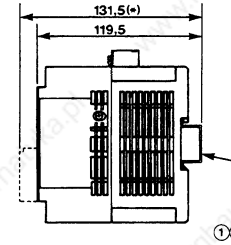

Slot-in mounting.

Always ensure that the 4 mm dia. mounting screws are fitted with flat washers.

Mounting guidelines

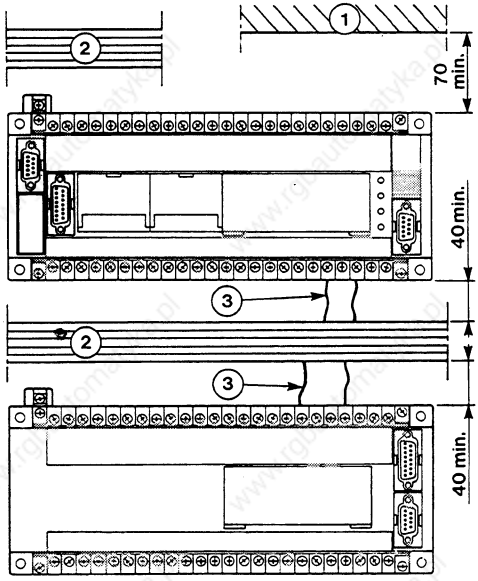

① Other device, enclosure or machine frame

② Cable duct or guide

③ Leave approx. 20 to 30 mm slack in the cabling to allow for inserting and removing the terminal block.

Important

On machines in which the PLC is subject to vibrations, make sure that the PLC is fixed by 4 screwes to a support (machine frame or rigid plate) or is clipped onto a rail fixed at 300 mm centers maximum.

Avoid locating the extension blocks or modules above other heat generating devices (transformers, power supplies, contactors, etc.).

3 Wiring

3.1 Power Supplies

24VDC power supply

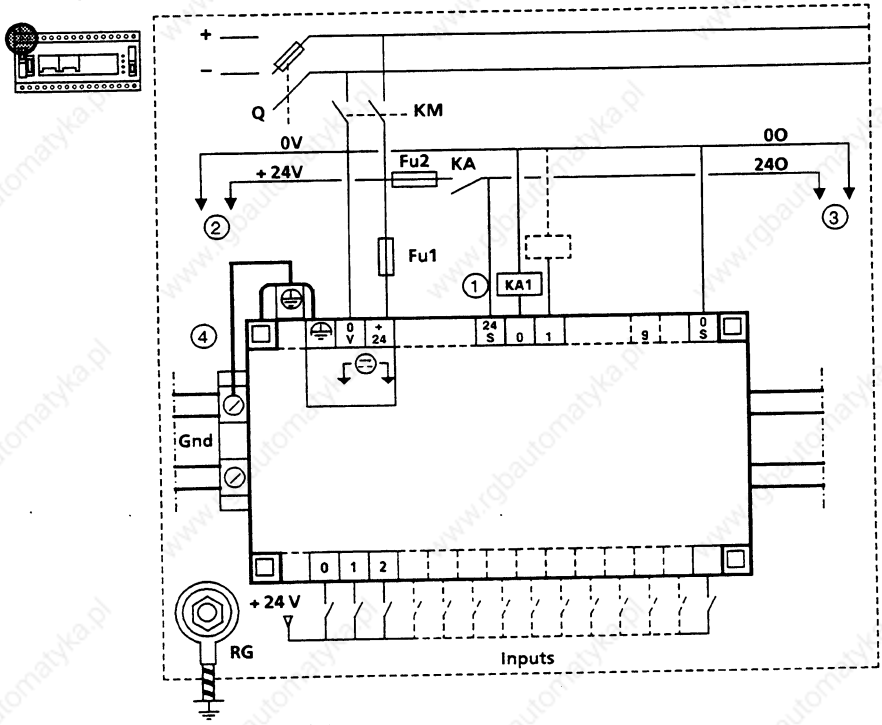

Q	Master switch,
KM	Line contactor or circuit breaker,
KA	Power slaving contactor slaved to alarm output O0,00 by relay KA1,
KA1	Relay connected to the Alarm output O0,00,
Fu1	PLC power supply protection fuse (3A),
Fu2	Output supply protection fuse,
Gnd	Ground connection, type AB1-TB432/435 for mounting rails or type DZ3-FA3 for mounting plates (AM1-PA). This connection must be located as close as possible to the chassis ground on each module,
RG	Reference ground to be connected to the factory ground,
①	To discrete I/O and sensor DC power supply,
②	To extension block and sensor DC power supply,
③	To switching device and DC extension control,
④	Ground wire for chassis ground, removable,

Important

- Connection to a power supply voltage other than that defined for the product cancels the guarantee.
- To avoid overvoltages due to power supplies external to the PLC, their terminals (0, +24V) should be equipped with a 2 kΩ ≥ 1W (preload) resistor.

Power Supplies (Cont'd)

110 to 240VAC - 50/60Hz power supply

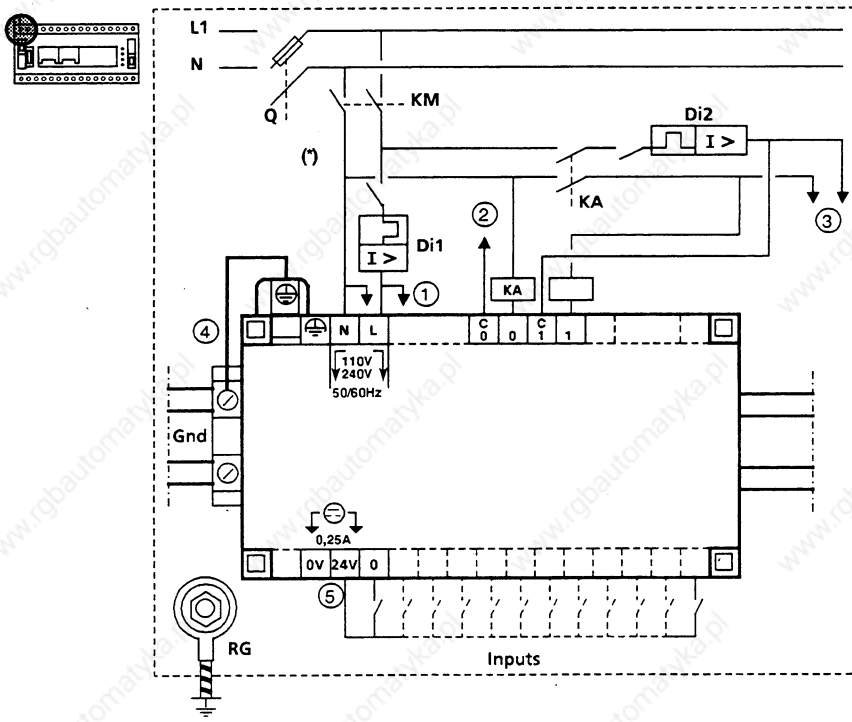

Q	Master switch,
KM	Line contactor or circuit breaker,
KA	Power slaving contactor controlled by alarm output O0,00 in automatic operation,
Di1	Type CB2-CB08 3A thermal cut-out, or fuse
Di2	Type CB2-CB.. thermal cut-out or fuse. If the control voltages have to be adapted for controlling switching devices, add a voltage transformer to the line after Di1. It is recommended that one point of the secondary winding be connected to the reference ground (RG). In this case provide adequate safety features (to protect personnel and equipment).
Gnd	Ground connection, type AB1-TB432/435 for mounting rails or type DZ3-FA3 for mounting plates (AM1-PA). This connection must be located as close as possible to the chassis ground on each module,
RG	Reference ground to be connected to the factory ground,
①	To discrete I/O and sensor DC power supply,
②	Refer to opposite page,
③	To switching device and AC extension control,
④	Ground wire for chassis ground, removable,
⑤	24VDC sensor supply (on, TSX 171 2028/3428, TSX 172 2028/3428, TSX DMF 342A). The supply must only be used by the sensors actually connected to the device. A 24 VDC sensor supply can be used to supply a single TSX ASG 200 analog output module.

Important

To avoid overvoltages due to power supplies external to the PLC, their terminals (0, +24V) should be equipped with a 2 kΩ ≥ 1W (preload) resistor.

Power Supplies (Cont'd)

Connecting the chassis ground

Each ground terminal (on the TSX 17, the transformers, etc.) must be connected separately and directly to the metal frame (AM1-PA mounting plate, mounting rails, etc.) through the ground connection (Gnd).

The reference ground should be connected to the earth ground of the factory or the site by a good quality copper braid of not less than 10mm2 (AWG 7). This connection should be direct, permanent and continuous.

Power supply slaving

The internal and external power supplies should be slaved so as to operate in the following sequence:

1. Energize the power supplies to the PLC and the inputs (contact KM as shown on pages 31 and 32).

2. Energize the power supply to the outputs through output O0,00 and the alarm contact KA of the PLC, if the PLC is running and in Automatic mode.

In addition, industrial safety standards require that the restarting of the system after a mains power break or emergency stop, must be manually initiated by the operator.

The slaving diagram opposite complies with these safety standards.

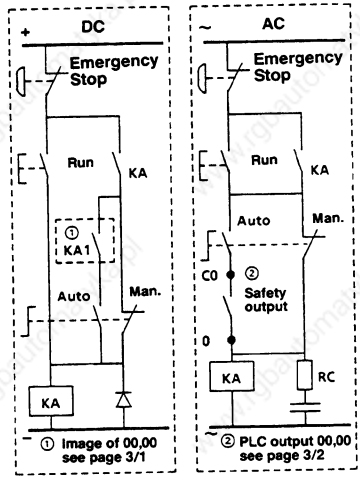

The Man/Auto switch allows the forcing of outputs when using a terminal connected to a PLC that is stopped (after SY8 is set to 0).

Power supply protection circuits

TSX Series 7 PLCs meet the electromagnetic interference standards defined in CEI 65A and NFC 63 850.

However, in industrial applications where high levels of interference are encountered, it may be necessary to fit an isolation transformer to the power supply (refer to sub-section 7.1).

Important

Inductive loads not controlled by the TSX 17, but using the same power supply must be fitted with a discharge diode (DC circuit) or RC circuit (AC circuit).

3.2 24VDC Inputs, Relay Outputs

Basic TSX 17-10 PLC, TSX 171 2028

12 inputs, 24VDC isolated, 8 relay outputs

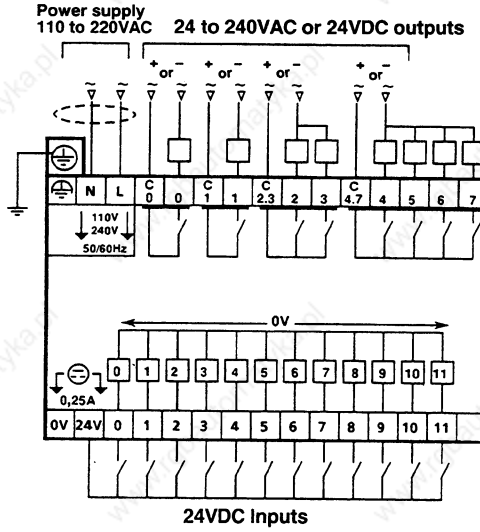

Basic TSX 17-20 PLC, TSX 172 2028

12 inputs, 24VDC isolated, 8 relay outputs

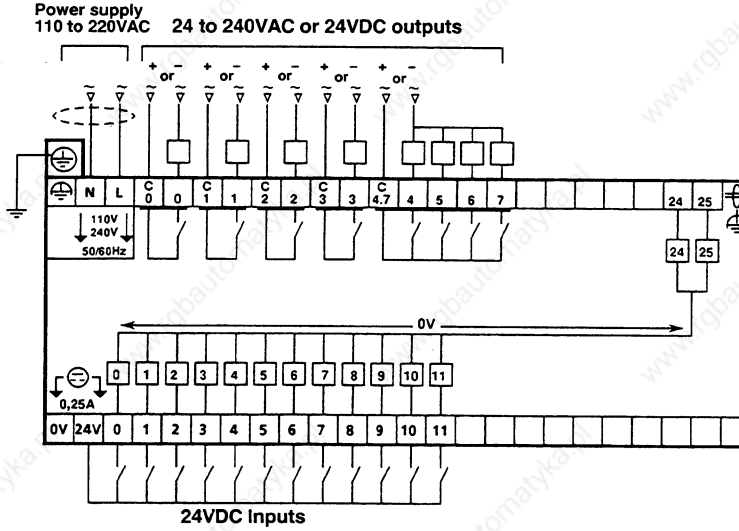

24VDC Inputs, Relay Outputs (Cont'd)

Basic TSX 17-20 PLC, TSX 172 3428

22 inputs, 24VDC isolated, 12 relay outputs

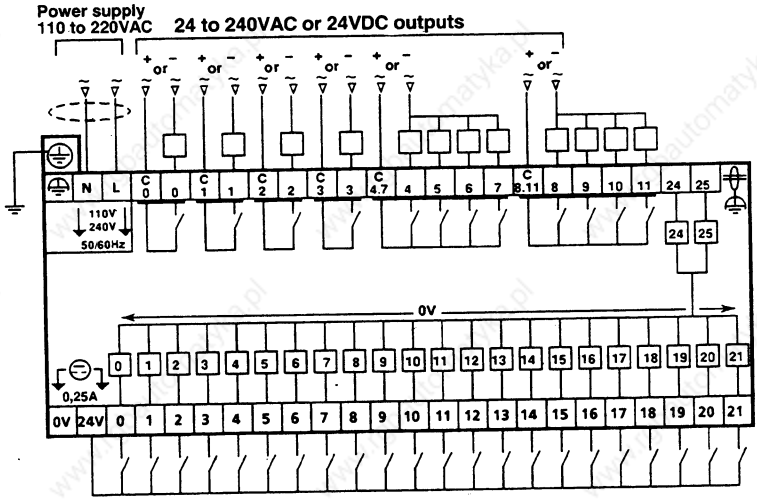

Basic TSX 17-10 PLC, TSX 171 3428
TSX DMF 342A Extension block

22 inputs, 24VDC isolated, 12 relay outputs

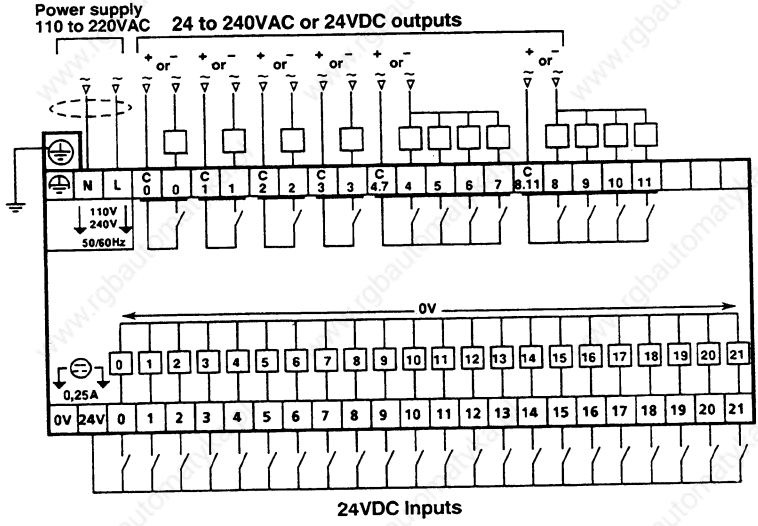

3.3 110VAC Inputs, Relay Outputs

Basic TSX 17-20 PLC, TSX 172 2044

12 inputs, 110VAC isolated, 8 relay outputs

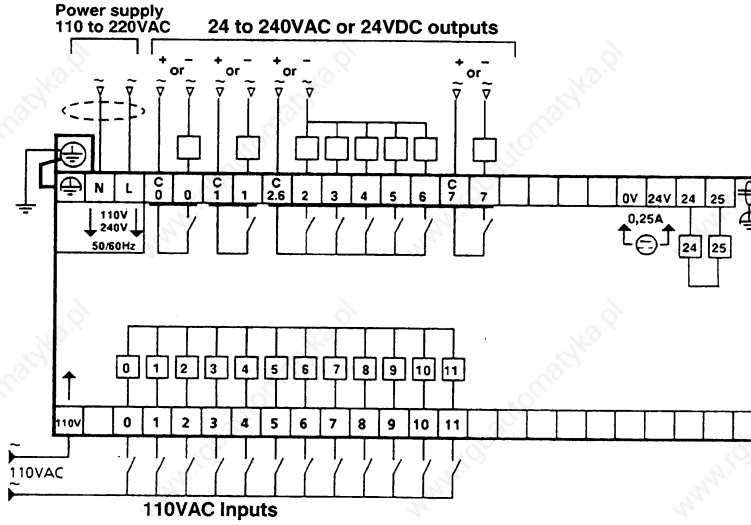

Basic TSX 17-20 PLC, TSX 172 3444

22 inputs, 110VAC isolated, 12 relay outputs

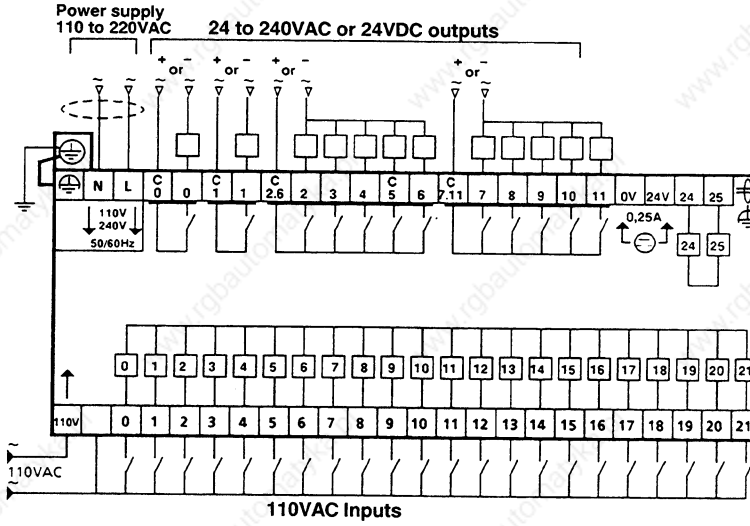

110VAC Inputs, Relay Outputs (Cont'd)

TSX DMF 344A Extension Block

22 inputs, 110VAC isolated, 12 relay outputs.

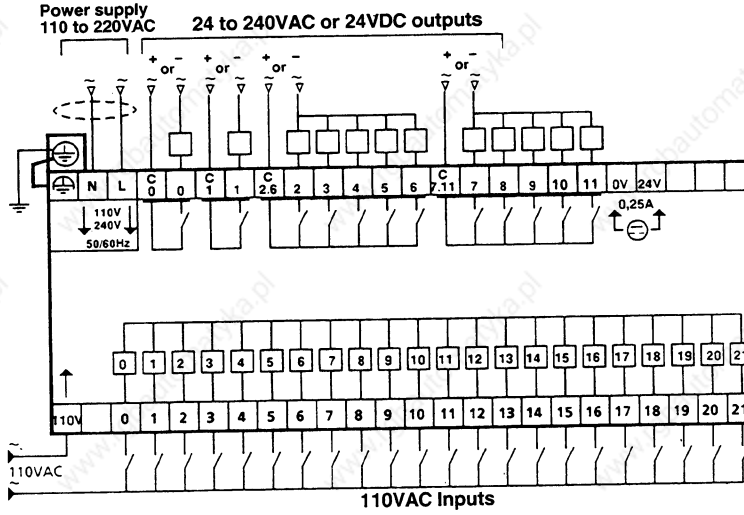

3.4 24VDC Inputs, Transistor Outputs

Basic TSX 17-20 PLC, TSX 172 2012

12 isolated 24VDC inputs, 8 isolated and protected 0.35A transistor outputs.

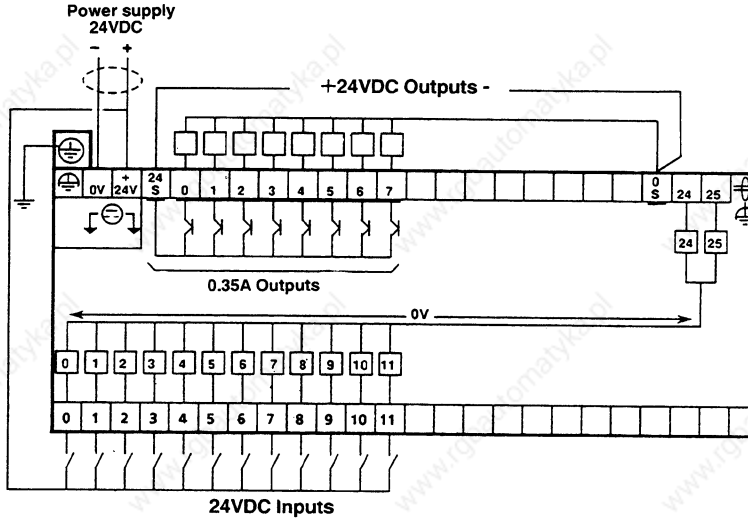

Basic TSX 17-20 PLC, TSX 172 4012

24 isolated 24VDC inputs, 16 isolated and protected 0.35A transistor outputs.

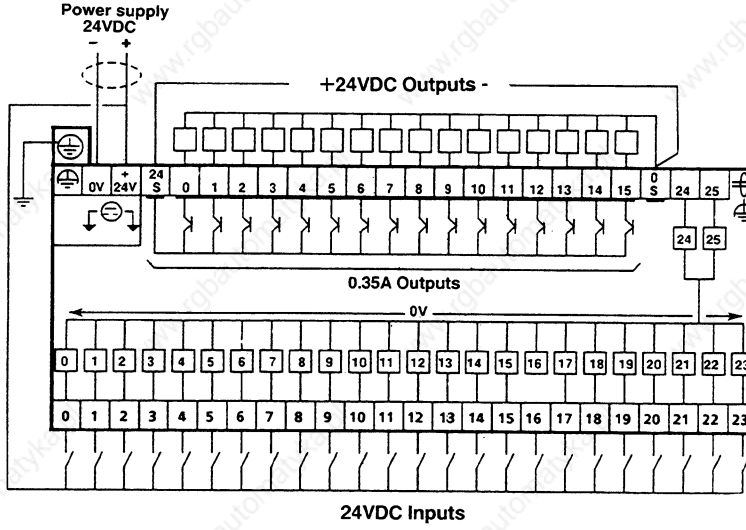

24VDC Inputs, Transistor Outputs (Cont'd)

TSX DMF 401 Extension Block

24 isolated 24VDC inputs, 16 isolated and protected 0.35A transistor outputs.

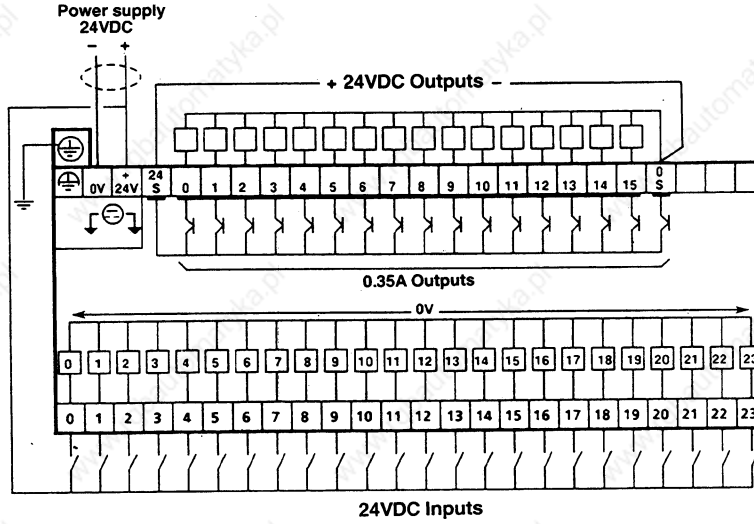

Notes:
- The diagrams above and on the facing page show a 24VDC power supply that is separate from that of the PLC and the inputs although it is possible to use the same supply.
- Connecting the outputs in parallel.
  The two outputs can be connected in parallel (refer to the characteristics on Page 5/3).

24VDC Inputs, Transistor Outputs (Cont'd)

Basic TSX 17-10 PLC, TSX 171 2002

12 inputs, 24VDC not isolated, 8 outputs, 1 and 2A, not isolated, not protected.

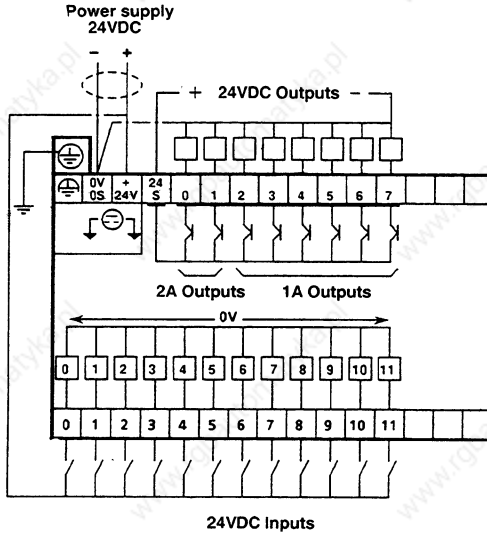

Basic TSX 17-10 PLC, TSX 171 4002

24 Inputs, 24VDC not isolated, 16 Outputs 1 and 2A not isolated and not protected.

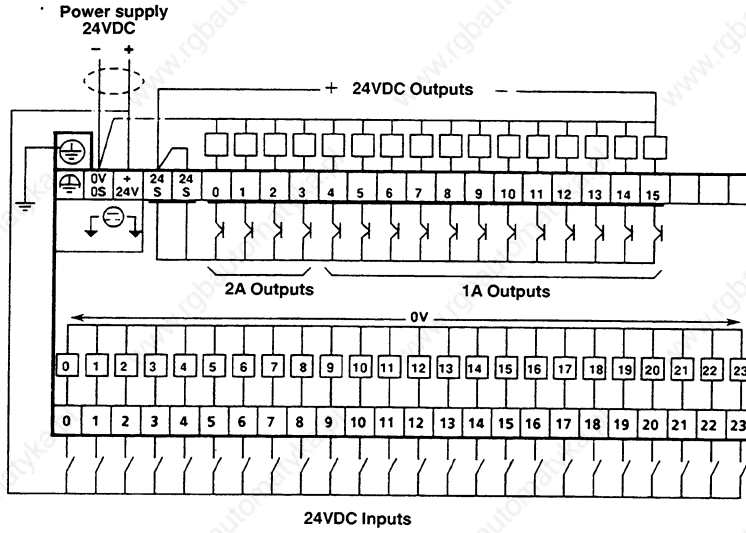

24VDC Inputs, Transistor Outputs (Cont'd)

TSX DMF 400 Extension block

24 Inputs, 24VDC not isolated, 16 Outputs 1 and 2A not isolated and not protected.

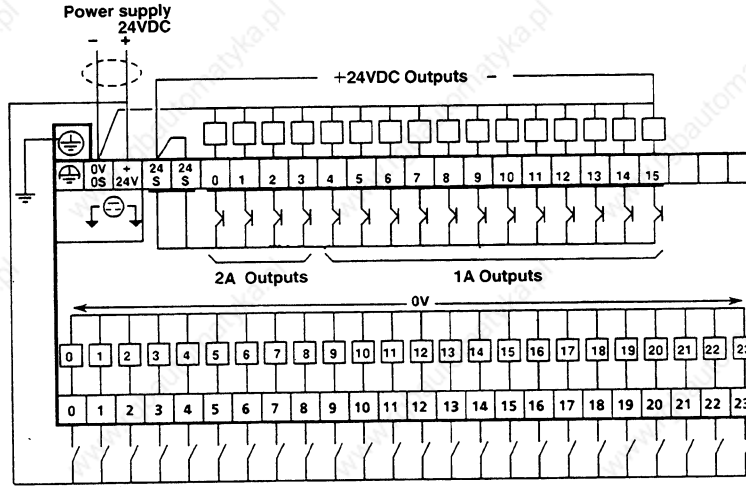

24VDC Inputs

Notes:

- The diagrams above and on the facing page, show a 24VDC power supply that is separate from that of the PLC and the inputs although it is possible to use the same supply. In all cases the 0V lines must be common.
- Distribution of the 1 and 2A outputs.

	2A Outputs	1A Outputs
TSX 171 2002	Points 0 and 1	Points 2 to 7
TSX 171 4002	Points 0 to 3	Points 4 to 15
TSX DMF 400	Points 0 to 3	Points 4 to 15

- Connecting the outputs in parallel.
  It is possible to connect the outputs in parallel (refer to the characteristics on Page 5/3).

3.5 Extension Module I/O

Extension modules

TSX DEF 812
8 Isolated 24VDC inputs

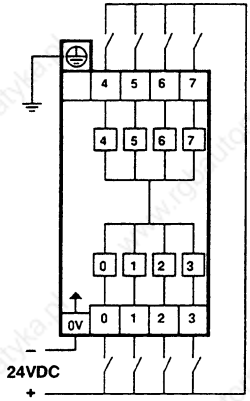

TSX DEF 804
8 Isolated 110VAC inputs

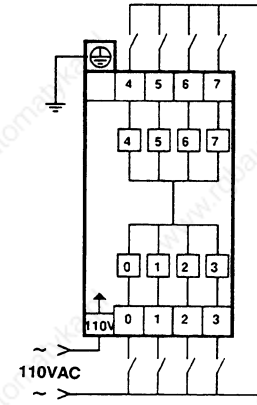

TSX DSF 635
6 relay outputs

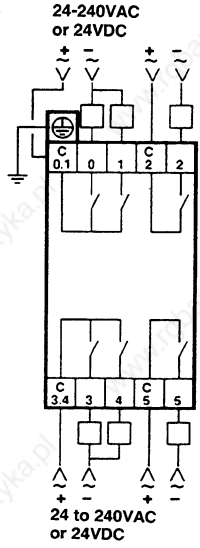

TSX DSF 612
6 Transistor outputs
0.35A isolated & protected

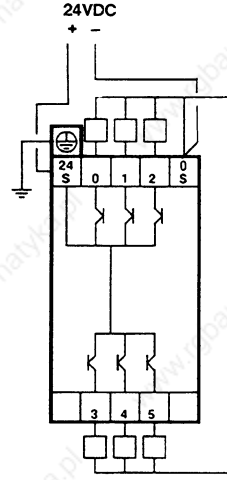

TSX DSF 604
6 Triac outputs

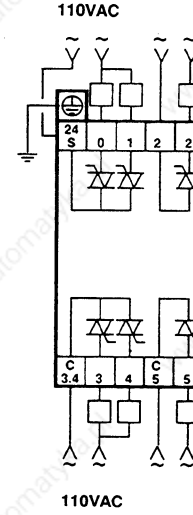

3.6 2- and 3-Wire Detector Connection Examples

- **For 24VDC inputs**

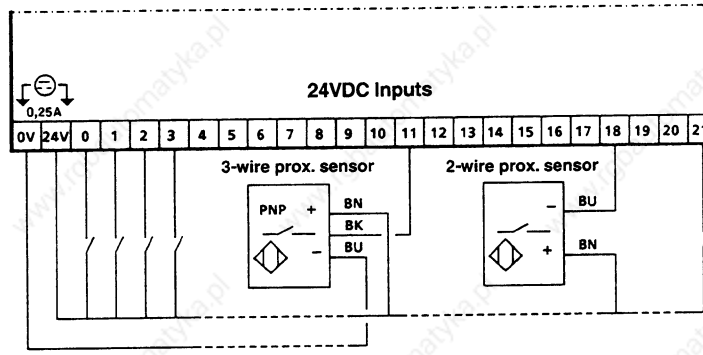

3-wire DC sensors: 24VDC, PNP output,
2-wire DC sensors: 24VDC rated supply with or without specified polarity.

- **For 110VAC inputs**

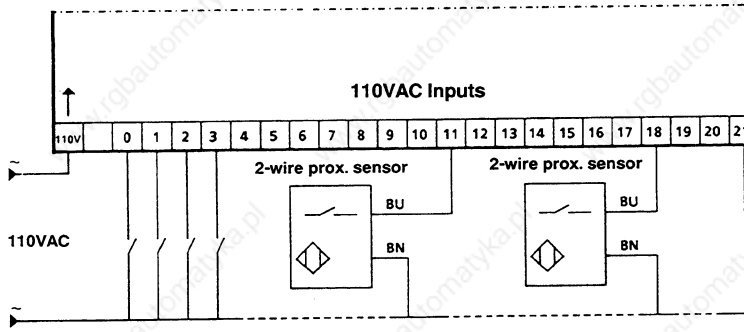

2-wire AC sensor: 110VAC rated supply.

3.7 Event-Triggered Inputs

24VDC Event-Triggered inputs (TSX 17-20 only)

Basic PLCs
TSX 172 2028/2012
TSX 172 3428/4012

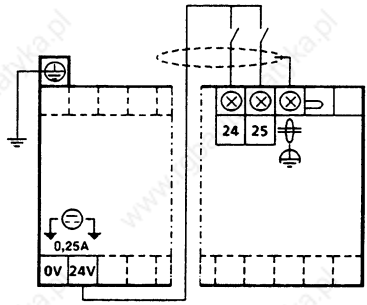

Basic PLCs
TSX 172 2044
TSX 172 3444

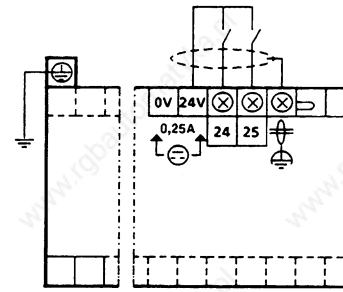

The fast response time of the event-triggered inputs I0,24 and I0,25, require the use of shielded cables for connecting these inputs.

The event-triggered inputs will accept 24VDC, 2- or 3-wire sensors (using the same wiring principles described on the previous page).

At the PLC end, the shielding should be connected to the connector provided on the PLC.

3.8 Fast Counter

Fast counter (TSX17-20 only)

The fast counter has two separate channels that are both isolated. The selection of the operating voltage for each input is separate and can be different:

- counter input (5 or 24VDC),
- reset input (5 or 24VDC).

Example 1: Connecting a Telemecanique XCC-H..S.. encoder (counter) and a 3-wire PNP detector (used for reset).

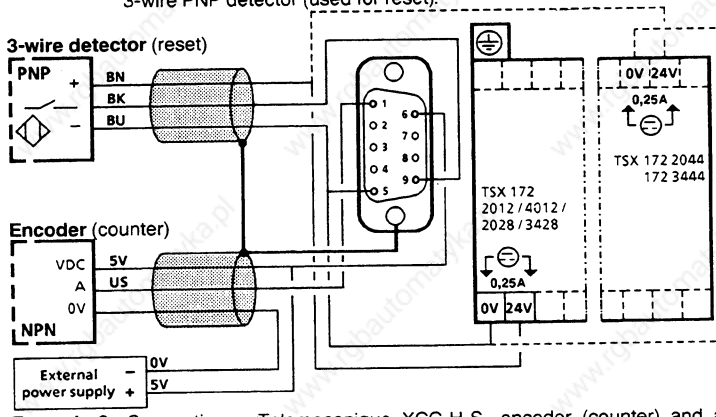

Example 2: Connecting a Telemecanique XCC-H..S.. encoder (counter) and a 3-wire PNP detector (used for reset).

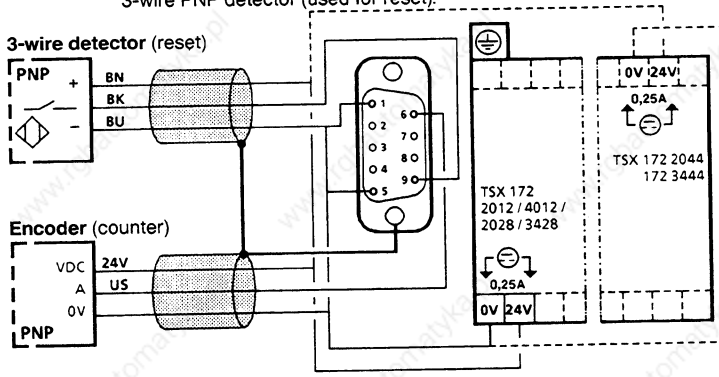

Connection is made to the top left (9-pin) female connector on the TSX 17-20. The connection is made using a TSX CCB 020 cable, length 2 meters, that is fitted with a (9-pin) male connector at one end, the other end can be fitted with a TSX CAC 04 (9-pin) connector that should be soldered on.
The cable shielding is connected to the PLC ground through the ground connector of the PLC.

Connector pin-arrangement and wire color coding

Input	pin	color
0V counter	1	blue
5V counter	7	black
24V counter	6	grey

Input	pin	color
0V reset	5	yellow
5V reset	8	orange
24V reset	9	white
not used		purple

3.9 Wiring the I/O

The TSX 17 PLC comprises built-in I/O protection circuits that ensure correct operation in harsh industrial environments.

However the following rules apply to ensure that the wiring meets the requirements for preserving this level of protection.

Discrete inputs

All multiple conductor cables that carry sensor data must also carry the common line for these signals.

Analog inputs

The analog inputs are carried by shielded twisted pair cables over a maximum length of 200 meters.

Discrete outputs

If a contact is added between a PLC output and a switching device coil, external protection should be provided on the terminals of the coil and the switching device:

- RC circuit for AC switching devices (Ref. No. LA9 D09980),
- discharge diode for DC switching devices.

Analog outputs

The analog outputs are carried by shielded twisted pair cables over a maximum length of 200 meters.

Cable routing

Outside the enclosure:

All cables to the I/O should be run in separate cable ducts away from high voltage cables. For long parallel runs, ensure that a separation of at least 100 mm is maintained between the ducts.

Inside the enclosure:

All power circuit cables (power supplies, power contacts, electrically operated valves, etc) should be kept separate from the input (sensor) and output (switching device) wires.
If possible ensure that input and output wiring is kept in separate cabling ducts.

Note: DC current signals and AC current signals should always be run through different cables.

Test

When testing a voltage on the terminal block connectors, always ensure that the screws are tightened down firmly (to ensure proper contact).

4 Setting into Service - Maintenance

4.1 Initial Power-up Procedure

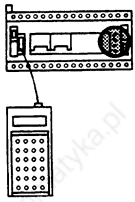

The various built-in self-tests ensure continuous monitoring of the various functions of the TSX 17 PLC.

The results of these self-tests are displayed on the front panel of the PLC basic unit. Additional information can be gained by connecting a TSX T317 or TSX T407 terminal in Diagnostic mode.

The diagram below gives the procedure to be followed when the PLC is first powered-up (with blank RAM memory).

Before powering-up the PLC remove the protective cover from the PLC. This should always be in place during wiring operations.

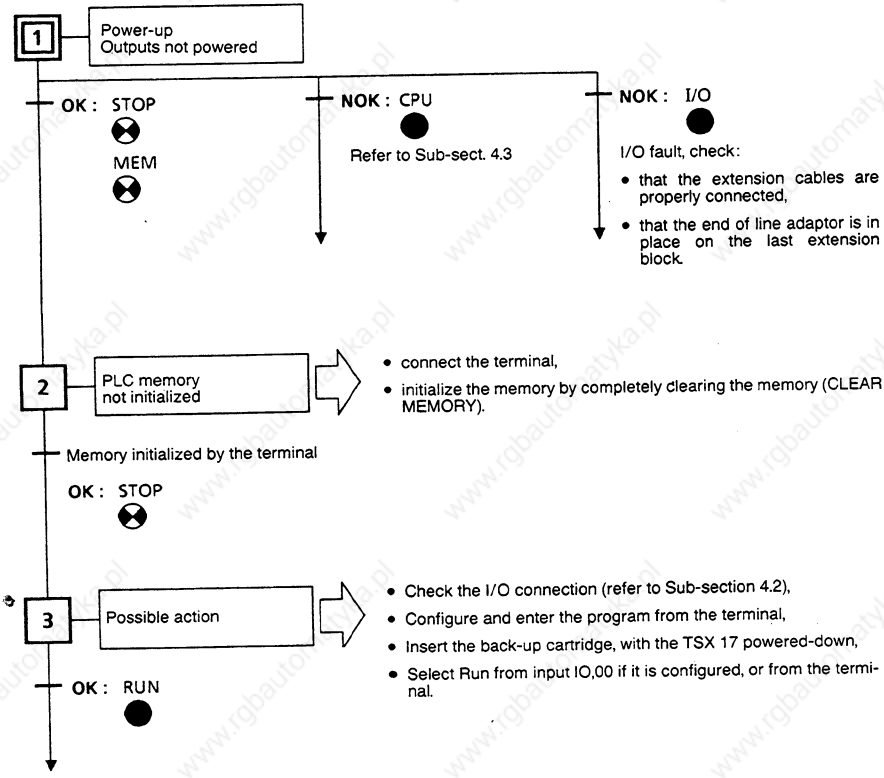

Note: The following applies to all steps		**Description**	
BATT ●	Battery failure or Battery not fitted	●	Indicator on,
		⊗	Blinking indicator,

4.2 Checking the I/O Connections

Principle

The I/O connection check is performed to ensure that:

- Data from sensors is accepted by the inputs and sent to the processor,
- Command instructions from the processor activate the outputs and are sent to the corresponding switching devices.

Caution: To avoid causing unnecessary and potentially dangerous machine motion during checking procedures, the following precautions should be taken:

- remove the motor drive power supply fuses,
- disconnect pneumatic and hydraulic supply lines.

Procedure

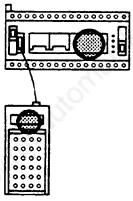

Follow the procedure described below:

- Perform the initial power-up procedure as described opposite (steps 1 and 2). Ensure that the I/O indicator is not lit.
- Leave the PLC in Stop,
- Select Adjust mode from the TSX T317 or TSX T407 terminal,
- Change the state of system bit SY08 (Alarm output): set this bit to 0,
- Checking the inputs:
  On actuation of each sensor:
  - check that the corresponding input indicator on the front panel changes state,
  - using the terminal display, check that the corresponding input bit also changes state.
- Checking the outputs:
  - using the terminal, set each output bit first to 0 then to 1,
  - check that the corresponding output indicator on the front panel changes state,
- When the checks are complete:
  - cancel all forcing,
  - reset system bit SY08 to 1 (all outputs are set to 0).

Note: This entire procedure can be carried out in Run mode, if the PLC does not have an application program loaded. In this case SY08 can remain at 1 (state by default).

4.3 Troubleshooting Using the Indicator Lights

Basic PLC	Description	Probable cause and corrective action
RUN/STOP LED		
○	PLC power off	
⊗	PLC stopped	Status selected by setting IO,00 from the terminal or caused by a fault.
●	PLC running	Normal state
CPU/PROG LED		
○	Normal operation	
⊗	Triggers the watchdog (150ms), stops the PLC.	Programming error caused by an upstream Jump command. Check and modify the program.
●	Processor fault	Cartridge or PLC fault, replace the faulty component.
I/O/MEM LED		
○	Normal operation	
⊗	PLC memory not initalized: blank cartridge (first power-up) or back-up memory endurance exceeded.	• Check the condition of the battery, • Initialize the memory from the terminal by completely erasing the memory (CLEAR MEMORY, CLM).
●	Input/Output fault(*)	• Software configuration that does not correspond to the hardware configuration. • Extension cable incorrectly mounted or faulty, • No end of line adaptor fitted to the last extension, • No 24VDC supply to the sensors (or overload I > 250mA), • I/O circuit failure, replace the PLC.
BATT ●	Battery not fitted or faulty.	

Extension blocks and modules

I/O ⊗	I/O exchange fault	Refer to the 2nd and 3rd corrective actions listed for I/O faults.

○ **Off** ⊗ **Blinking** ● **On**

(*) The terminal Diagnostics mode will give the cause of the fault. If the fault remains after corrective action has been taken, reset the PLC (selecting INIT from the terminal).

Notes

www.rgbautomatyka.pl

5 Technical Characteristics

5.1 Power Supply Characteristics

Power supply for basic PLCs and extensions blocks	Type		TSX 171 2028/3428 TSX 172 2028/2044 TSX 172 3428/3444 TSX DMF 342A/344A	TSX 171 2002 TSX 171 4002 TSX DMF 400	TSX 172 2012 TSX 172 4012 TSX DMF 401
	Discrete inputs				
	Power supply voltage	rated	110-240VAC	24VDC	24VDC
		limit	96 to 264VAC	19.2-30V (1)	19.2-30V (1)
	Frequency	rated	50/60Hz	-	-
		limit	47 to 63Hz	-	-
	Power required	basic PLC	42VA	16W	24W
		ext. block	31VA	-	-
	Protected sensor supply		24VDC/0.25A	-	-
	Supply/ground isolation		1500V eff./50Hz	none	1500V eff./ 50Hz
	Meets CEI standard 65A		yes	yes	yes

5.2 Discrete Input Characteristics

24VDC Input characteristics	Basic PLC units			TSX 171 2028/3428 TSX 172 2028/3428 TSX 172 2012/4012 TSX DMF 342A/401	
	Extension blocks & modules		TSX 171 2002 TSX 171 4002 TSX DMF 400		TSX DEF 812
Positive logic	Type		not isolated	isolated	isolated
	Rated input values	• voltage	24VDC	24VDC	24VDC
		• current	7mA	7mA	15mA
		• sensor supply	19.2-30VDC (1)	19.2-30VDC (1)	19.2-30VDC (1)
Display of each input, PLC side	Limit input value • at 1	voltage	≧ 11V	≧ 11V	≧ 11V
		current	≧ 2.5mA for U=11V	≧ 2.5mA for U=11V	≧ 6mA
	• at 0	voltage	≦ 5V	≦ 5V	≦5V
Sensors commoned to the +24V for DC inputs		current	≦ 1.4mA	≦1.4mA	≦ 3V
	Input impedance		3.2 to 3.7Kohms	3.2 to 3.7Kohms	1.5 to 1.7 Kohms
	Response times	• from state 0 to 1	4.5 to 12ms	4.5 to 12 ms	6 to 18ms
		• from state 1 to 0	4.5 to 12ms	4.5 to 12ms	4 to 13ms
	Power dissipation per point at state 1		0.17W	0.17W	0.35W
	External line	• line resistance	< 500ohms	≦ 500ohms	≦ 500ohms
		• leakage resistance	≧ 30Kohms	≧ 30Kohms	≧ 30Kohms
	Isolation	• between inputs and bus	none	≧ 10Mohms at 500VDC	≧ 10Mohms at 500VDC
		• type		optical coupler	optical coupler
	Meets CEI standard 65A		Class 1	Class 1	Class 2
	Compatible with 2- and 3-wire Telemecanique sensors		yes	yes	yes

(1) Including ripple

Discrete Input Characteristics (Cont'd)

110VAC Input characteristics	Basic PLC units Extension blocks & modules		TSX 172 2044 TSX DMF 344A	TSX 172 3444 TSX DEF 804
	Rated input values	• voltage	110VAC	
		• current	15mA	
		• frequency	50/60Hz	
		• sensor supply	88VAC to 132VAC	
Display of each input, PLC side	Limit input values	• at 1 voltage	> 74V	
		current	> 6mA for U=74V	
		• at 0 voltage	< 20V	
		current	< 4mA	
		• Frequency	47 to 67Hz	
	Input impedance		5.8 to 9.5Kohms	
	Response times	• from state 0 to 1	33ms	
		• from state 1 to 0	50ms	
	Power dissipation per point at state 1		0.2W	
	External line	• line resistance	< 1Kohms	
		• leakage resistance	> 30Kohms	
	Isolation	• between inputs and bus	1500Veff - 50/60Hz	
		• type	optical coupler	
	Meets CEI standard 65A		Class 2	
	Compatible with 2- and 3-wire Telemecanique sensors		yes	

5.3 TSX 17-20 Event Triggered and Fast Counting Input Characteristics

Inputs			Event trig.	Fast counting	
Rated values	• voltage		24VDC	24VDC	5VDC
	• current		15mA	15mA	38mA
Limit input values	• at 1	voltage	≧11V	≧11V	≧2V
		current	≧6mA, U=11V	≧6mA, U=11V	≧6mA, U=2V
	• at 0	voltage	< 5V	≦ 5V	≦ 1V
		current	≦ 3mA	≦ 3mA	≦ 3mA
Response times	• from state 0 to 1		0.15 to 1ms	maximum allowable frequency	
	• from state 1 to 0		0.3 to 1ms	2KHz	2KHz
Isolation	• between inputs and bus		> 10Mohms at 500VDC		
	• type		optical coupler		
Meets CEI standard 65A			Class 2	Class 2	
Compatible with 2 and 3-wire Telemecanique sensors			yes	yes	

The I/O characteristics are given for a 60% load factor (number of I/O simultaneously at 1 in relation to the total number of I/O).

5 Technical Characteristics

5.4 Discrete Output Characteristics

Transistor output characteristics	Basic PLC units			TSX 172 2012
			TSX 171 2002	TSX 172 4012
			TSX 171 4002	TSX DMF 401
	Extension blocks		TSX DMF 400	TSX DSF 612
	Extension modules			
Positive logic				
Display of each input, PLC side	Type of outputs		Transistors not protected	Transistors protected
Loads commoned to the - of the power supply	DC loads	• rated voltage	24VDC	24VDC
		• rated current	2A* 1A*	0.32A (refer to the diagram below)
		• rated current with 2 outputs in parallel	3.2A 1.6A	0.63A (refer to the diagram below)
		• Tungsten filament indicator light	10W	8W
	Limit values	• voltage (including peaks	19.2-30VDC	19.2-30VDC
	Leakage current at 0		≤ 1mA	≤0.1mA
	Leakage current at 1 for rated I		≤ 0.5V	≤ 1.3V
	Response time (1)	• from state 0 to 1	≤ 100µs	≤ 100µs
		• from state 1 to 0	≤ 200µs	≤ 500µs
	Isolation	• between outputs & bus	none	≥ 10Mohm at 500VDC
		• type	-	optical coupler
	Built-in protection	• against shorting and overloading	none	thermal protection
		• against inductive overvoltages	yes	yes
	Compatible with TSX 17 24VDC inputs		yes	yes
	Meets CEI standard 65A		yes	yes

* Refer to Page 3/11 for the levels of the different outputs.

(1) In order to provide short guaranteed response times for fast applications, some transistor outputs are equipped with diode and zener diode fast discharge circuits, these outputs are:
- outputs 0 and 1 of the TSX 172 2012/4012 and TSX DMF 401,
- all outputs of the TSX 171 2002/4002 and TSX DMF 400.

With these outputs, the drop-out time of an actuator solenoid is:
t ≈ L/R, with L expressed in Henrys and R in ohms.

Power level of the protected transistor outputs

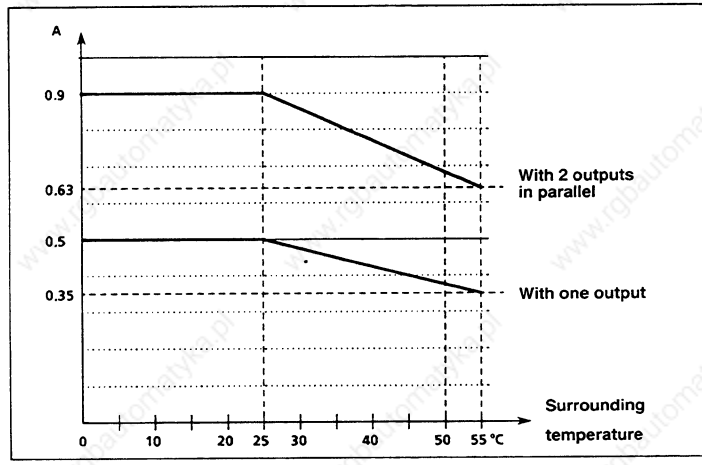

The I/O characteristics are given for a load rating of 60% (number of I/O at state 1 in relation to the total number of I/O).

Discrete Output Characteristics (Cont'd)

Relay output characteristics	**Basic micro-PLCs**		**TSX 171 2028/3428, TSX 172 2028/2044, TSX 172 3428/3444**			
	Extension blocks and modules		**TSX DMF 342A, TSX DMF 344A, TSX DSF 635**			
	Type of outputs		Relay			
Display of each output, PLC side	**AC loads**	• voltage	24 to 240VAC	24V	48V	110/240V
		• permissible power for AC11 duty (0.5Hz)	9VA	$3x10^6$ ops.	$10x10^6$ ops.	$10x10^6$ ops.
			25VA	$0.2x10^6$ ops.	10^6 ops.	$2x10^6$ ops.
			50VA			10^6 ops.
1 N/O contact per output	**DC loads**	• voltage	24V			
		• permissible power for DC11 duty(0.5Hz)	10W			
	Leakage current at state 0		≤ 1mA at 220V - 50Hz			
	Response times	• from state 0 to 1	≤ 10ms			
		• from state 1 to 0	≤ 20ms			
	Isolation	• between output groups	1500Veff - 50/60Hz			
		• between outputs and bus	1500Veff - 50/60Hz			
		type	Relays			
	Built-in protection	• against inductive AC overvoltages	MOV peak limiter on each output			
	Recommended external protection	• against shorting and overloads	Each output is fitted with a quick-acting fuse			
		• against inductive DC overvoltages	Discharge diode on the terminals of the output device			
	Compatibility with 24VDC PLC inputs		yes			

In future CEI standards, the AC11 duty cycle will become AC14 and DC11 will become DC13. The I/O characteristics are given for a load rating of 60% (number of I/O at state 1 in relation to the total number of I/O.

Discrete Output Characteristics (Cont'd)

Triac output characteristics

Display of each output, PLC side

Extension module		TSX DSF 604
Type of outputs		Triac
AC loads	• type	Inductive
	• rated voltage	110 - 120V
	• rated current/point	1A (*)
	• rated frequency	50/60Hz
Max. values	• voltage	93.5 - 132V
	• peak load when triggered	10A over 2 cycles, 1 time/sec.
	• total module load	3A max. (*)
	• frequency	47 - 63Hz
Response times	• from state 0 to 1	1/2 period + 0.5ms
	• from state 1 to 0	< 1/2 period
Current leak at 0		< 3mA
Loss current	• I rated > 50mA	< 3V
	• 25mA<I rated<50mA	< 13V
Built-in protection	• against inductive AC overvoltages	MOV and RC peak limiter on each output
Recommended external protection	• against shorting and overloads	Each output is fitted with a quick acting fuse, rated < 3.15A
Compatible with TSX Series 7 PLC 110VAC PLC inputs		yes
Meets international standards		CEI 65A, NFC 63850, UL, CSA
Isolation	• between outputs	1500Veff 50/60Hz
	• between outputs and bus	1500Veff 50/60Hz
	• type	optical coupler

(*) temperature derating if ΘA = 40 degrees C:
- per point: 0.017A/deg.C I/point = 1-0.017 x (ΘA-40)
- in the module: 0.007A/deg.C I/point = 3-0.007 x (ΘA-40)

The I/O characteristics are given for a load rating of 60% (number of I/O at state 1 in relation to the total number of I/O).

5.5 Compatibility with Telemecanique Sensors

This page presents a selection of the most frequently used Telemecanique sensors which are directly compatible with the 24VDC and 110VAC inputs of the TSX 17. For other Telemecanique products which are also directly compatible, consult the specialized catalogs available from your local Telemecanique Sales and Service Office.

Ranges (Sn) for inductive sensors are given in mm.

Inductive proximity sensors

Cylindrical sensors form A

XSA

XSL

XSM

Conforming to Cenelec standards EN 50040 (2-wire) EN 50008 (3-wire)

Series	Voltage	Type	Sn	Ø4.5 and 6.5	Sn	Ø8	Sn	Ø12	Sn	Ø18	Sn	Ø30
Metal case	DC	2-wire		-		-	2	XSA-C02712	5	XSA-C05712	10	XSA-C10713
		3-wire	1	XSL-H0131	1	XSA-H0131	2	XSA-H02231	5	XSA-H05712	10	XSA-H10713
				-		-		-	5	XSA-H05713B	10	XSA-H10713B
	AC	2-wire					2	XSA-A0291	5	XSA-A0510	10	XSA-A10011
Plastic case		3-wire		-	1.5	XSP-H0131	4	XSP-H0431	8	XSP-H0831	10	XSP-H1531
	AC	2-wire					4	XSP-A0491	8	XSP-A08010	15	XSP-A15011
Short metal case	DC	2-wire		-		-	2	XSM-C02713	5	XSM-C05713	10	XSM-C10713
		3-wire	0.8	XSL-H0831		-	2	XSM-H02713	5	XSM-H05713	10	XSM-H10713
			0.8	XSM-H0831		-	4	XSM-H04713	8	XSM-H08713	15	XSM-H15713

Rectangular sensors forms C and D

XSC

Conforming to Cenelec standards EN 50025 and 50026

Type	Voltage	Sn	Form C	Sn	Form D	Sn	Form D (adjustable range)
2 wire	DC	15	XSC-C157139	40	XSD-C407139	30 to 60	XSD-C607139
3 wire		15	XSC-H157339	40	XSD-H407339		-
3 wire		20	XSC-H207339				
2 wire	AC	15	XSC-A150519	40	XSD-A400519	60	XSD-A600519

Sensors for special applications, 2-wire with plastic case (except for XSG, 3-wire with sensing face on edge).

XSB

Compact, with terminals			Compact, with leads				Compact, plug-in			
Detection	voltage	Sn	Shielded	Voltage	Sn		Detection	Voltage	Sn	
end face	DC	10 XSE-C107130	yes	DC	2	XSG-H023100	end face	DC	13	XSB-C10710
side face		10 XSE-C107133	no		4	XSG-H043100	side face		25	XSB-C25710
			yes	AC	2	XSG-A020110	end face	AC	13	SXB-A10511
			no		4	XSG-A040110	side face		25	XSB-A25811

Compatibility with Telemecanique Sensors (Cont'd)

Photo-electric sensors

XUB

Ranges (Sn) are given in meters. Barrier type sensors require both transmitter and receiver, reflex sensors require reflectors only.

Type	Voltage	Sn	cylindrical, short range	Sn	rectangular, short range	Sn	rectangular, medium range	Sn	rectangular, long range
Barrier	DC	4	XUP-H043134	6	XUH-H063134	8	XUG-H063134	30	XUE-H307534
				4	XUP-H043134				
	AC	4	XUB-A040114	-	-				
Reflex	DC	2	XUB-H02313	2	XUH-H02313	4	XUG-H04313	10	XUE-H10753
				2	XUB-H02313				
	AC	2	XUB-A02911	2	XUH-F02531			10	XUE-A10053
Proximity	DC	0.08	XUP-H083135	0.2	XUP-H203136	0.3	XUG-H303135	1.5	XUE-H017535
	AC	0.08	XUB-A089215	-	-	0.3	XUG-A300215		

Incremental encoders

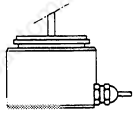

The output signals from the Telemecanique incremental encoders listed below are directly compatible with the built-in 24V fast counter input of the TSX 17-20

XCC - H.. H..	(PNP transistor output),	24VDC supply
XCC - H.. R..	(NPN transistor output),	24VDC supply
XCC - H.. S..	(NPN transistor output),	5VDC not supplied by the PLC

The other numbers in the reference number represent the diameter of the axis, the connection position and the resolution: refer to the Telemecanique catalog for further information.

5 Technical Characteristics

5.6 Compatibility with Telemecanique Actuators

All of the selected actuators listed on this page are directly compatible with the relay and transistor outputs of TSX 17 programmable controllers. To allow the use of actuators that are not compatible, the Telemecanique LA1 range of electromechanical and electronic interfaces is available. For further information refer to the Telemecanique catalog.

Electromechanical output devices

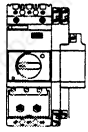

Integral 32 and 63-Contactors-Auxiliary contactors-Relays

AC control circuit									
Switching devices		Integral 32 63	Contactors Modular GC1-M GY1-M	Series E LC-E	Series D LC-D09 to D080	Aux. contactors & relays CA2-E CA2-E1	CA2-D CA2-D1	CA2-F CA2-FN1	RH RH-411
Relay outputs	24VAC	—	—						
	48VAC to 240VAC		—						
Triac outputs	110VAC	—		—					

DC control circuit									
Switching devices		Integral 32/63 for low level inputs	Contactors Modular LP-E	Series E LP-D12	Series D LP-D25	LP-D40 to D080	Aux. contactors & relays CA2-E CA2-E...B	CA2-D CA2-D...B	CA2-F CA-FN2 CA2-F...B	RH RH-412B
Relay outputs	24VAC	—	—				—			
Transistor outputs	24VDC 0.35A	—		—			—			
	24VDC 1 & 2A	—			—					

Pneumatic output devices

Electrically controlled pneumatic distributors - Electrovalves
Low power consumption modular electro-pneumatic interfaces

Device		Distributors 1/8"	1/8"-1/4"	1/4" 3/8" 1/2"	Plug-in electrovalves	Interface 3mm passage
AC switching devices		PVA-F101 PRS-M101	PVA-G101	PVA-E101	PS1-E1301	PS1-E1..01
Relay outputs	24-240VAC	—				
Triac outputs	110VAC			—		
DC switching devices		PVA-F102B PRS-M102B	PVA-G102B	PVA-E102B	PS1-E1302B	PS1-F1..02B
Relay	24VDC outputs	—				
Transistor outputs	24VDC 0.35A	—	—		—	
	24VDC 1 & 2A	—				

Variable speed drives

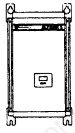

ALTIVAR variable speed drives for standard 3-phase asynchronous motors

Types of drives

ATV25: 0.37 to 2.2KW
220V 50/60Hz single-phase supply
ATV45: 0.75 to 22KW
380/415V 50/60Hz three-phase supply

Use of relay outputs

- **for switching reference signals**
- **for controlling logic commands:**
  - **forward, reverse**
  - **injecting DC (ATV45 only)**

Use of analog outputs (TSX ASG)

To display speed instructions

- **by voltage outputs on ATV25**
- **by voltage or current outputs on ATV45.**

6 Service Conditions

6.1 Standards

The TSX 17 programmable controller conforms to all the principal national and international standards and recommendations concerning industrial electronic control equipment, including:

France:	NFC 63 850	**U.S.A:**	UL 508 UL 746C UL 94 NEMA ICS 3 304
International:	CEI 664 CEI draft standards for PLCs 65A, 68 and 69	**Canada:**	CSA 22.2 n° 142

6.2 Environment - Normal Service Conditions

Climatic environment

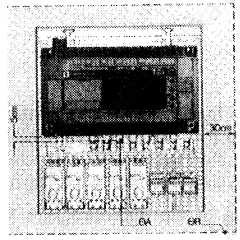

Normal temperature conditions	TSX 17	TSX T317
⊖ A for operation	5°C to 55°C	5°C to 40°C
⊖ A for storage	-25°C to 70°C	-25°C to 70°C
⊖ A : temperature of local air (see diagram), not to be confused with ⊖ R : ambient temperature outside the enclosure.		
Normal conditions of relative humidity and altitude		
Relative humidity (without condensation)		30 to 95%
Altitude		0 to 2000 meters

Vibrations

The vibration tests described below have been carried out on the TSX 17 only and not on it's peripherals, mounting frame or enclosure.

Sinusoidal frequency along 3 axes		5Hz	57Hz	150Hz
Test values				
	Amplitude	75µm constant		
	Acceleration		1g constant	
Test values				
	Amplitude	15µm constant		
	Acceleration		0.2g constant	

Qualification tests effected in sweeps of 5 to 150Hz, 10 sweeps per axis at 1 octave per minute.

Mechanical shocks

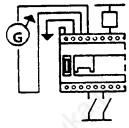

The term mechanical shocks includes jolting, hammering, knocking over, dropping and impacts. For definitions refer to CEI draft standards on programmable controllers 65A, 68 and 69.

Nominal voltage	Operating range	Frequency range	Harmonic distortion	Micro-cuts: duration	repetition
110 to 240VAC	90 to 264VAC	47 to 63Hz	10%	10ms	1Hz
24VDC	19.2 to 30VDC (1)				

(1) Including ripple

6.3 Reliability

The TSX 17 micro-PLC is designed and built by Telemecanique to the highest standards of safety, reliability and maintainability possible using state of the art technology.

Reliability

The reliability of a device is its ability to accomplish its required function in defined conditions during a given time. Irrespective of the manufacturer and the number of precautions that are taken (selection of components, systematic testing, quality control, high temperature burn-in etc.), the failure rate is never zero. A certain number of failures must therefore be expected to occur during the life of a programmable controller. Consequently, the necessary precautions should always be designed into an application so as to reduce the possibility of faults occuring and to limit the consequences of any failure, particularly where safety is concerned.

Built-in self-tests

The TSX 17 is equipped with a series of built-in self-tests capable of detecting the majority of internal failures and operator errors that can occur during start-up, normal operation and maintenance of the automated system. These tests are performed at power-up, or during one or more scan cycles, and mainly concern:

- the processor: operational monitoring of the microprogram, the internal RAM memories (checksum), and the watchdog,
- the user RAM memory: check of contents before and after the power break, if the configuration is fitted with a memory cartridge, its contents are transferred to the RAM if a test of their contents shows them to be different.
- the I/O: check extension block power supply presence and data exchange on the I/O bus.

Diagnostic aids

The results of these self-tests, depending on their importance, are

- indicated by LEDs on the front panel of TSX 17 components,
- available to the user program through the system bits,
- blocking if they cause the PLC program scan cycle to stop and reset the outputs (if SY8=1).

It is also recommended that the full power of the PL7 software be used to provide automated assistance with troubleshooting (especially to find problems caused by failures external to the PLC, these account for 90 % to 95 % of such failures.

6.4 Safety —System Availability

Safety

A system is said to be totally safe if the appearance of faults can never lead to a dangerous situation.
The operational safety of a device is its ability to avoid the appearance of faults and to minimize their effects when they occur.
An internal fault in a control system can be classified as belonging to one of two types:

- passive if the fault results in an open circuit output (no signal sent to output devices),
- active if the fault results in a closed circuit output (signal sent to output devices),

Whether or not a given type of fault can be considered dangerous will depend on the function of the ouptut concerned. A passive fault is dangerous if the normal function of the signal is to control an alarm. An active fault is dangerous if it maintains an undesired signal.
Furthermore, it is important to appreciate the fundamental difference in behaviour between an electromechanical relay and an electronic component (such as a transistor for example):

- there is high probability that a fault in a relay will produce an open circuit (controlled circuit not powered),
- but there is an even probability that a fault in a transistor will produce an open circuit, it is just as likely to produce a closed circuit.

For this reason, it is important to correctly determine the nature and consequences of possible faults when designing an automated system controlled by a solid-state device such as a programmable controller.

The system designer should provide protection against any internal active faults in the PLC which may not be indicated, or which may be dangerous for the application, by incorporating external protective devices. These protective devices may use several different technologies such as mechanical, electromechanical, pneumatic, hydraulic or electronic (for example, wiring a limit switch and emergency stop button to the coil of a motion control contactor).

System availability

The availability of a system is its ability to accomplish a required function at any given moment and during any given period, and includes considerations of reliability, maintainability and maintenance policy. System availability is therefore specific to each application, since it depends on:

- the architecture of the automated systems,
- the reliability and maintainability of the hardware used (PLCs, sensors, actuators, machines, etc.),
- the user's maintenance policy and logistic back-up (software structure, failure indication and warning systems, availability of spare parts, training of maintenance personnel, etc.).

7 Appendix

7.1 Isolation Transformer Equipped Power Supply

Although TSX Series 7 PLCs meet the electromagnetic interference standards defined in CEI 65A and NFC 63 850, in industrial applications where high levels of interference are encountered, it may be necessary to fit an isolation transformer to the power supply.

If an isolation transformer is fitted, the wiring diagram shown on page 32 is changed to look like:

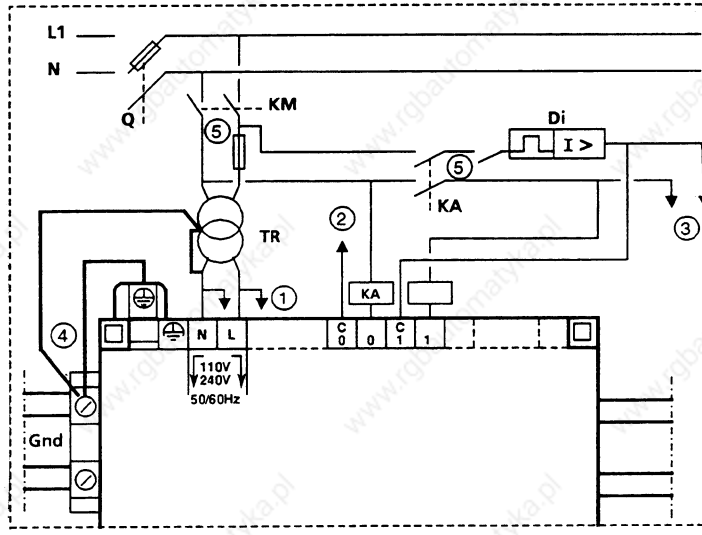

(5) 275 V, 90 joule MOV peak limiting circuit to locate as close as possible after the KM and KA circuit breakers.

When a DC supply is used, refer to the connection diagram on page 31, and add a discharge diode protection circuit after the KM and KA circuit breakers.

High Impedance Grounded Neutral System

An isolating transformer is mandatory when using certain versions of TSX 17 PLCs with a high impedance grounded neutral system. The connection diagram is the same as that shown above.
The following TSX 17 PLCs are affected by this requirements:

- TSX 171 2028 software version II < 06,
- TSX 172 2028/3428 software version II < 07,
- TSX DMF 342A software version II < 05.

7 Appendix

7.2 TSX 17 ACC2 Display

Programming Example

Depending on the state of input I0,2, this routine will display eiter the value of word W0 or the current value of counter C0,V.

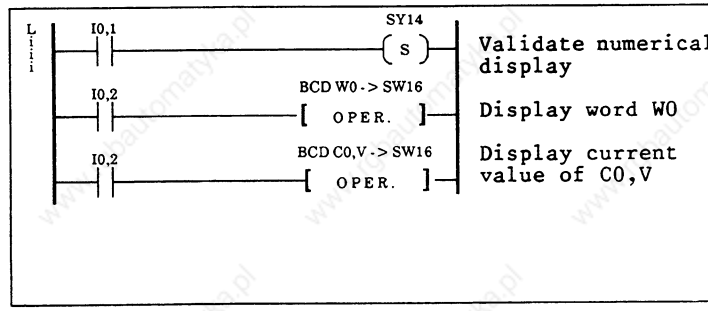

Note: Refer to page 12 for instructions on how to intall the TSX 17 ACC2 display module. This display can be fitted to any TSX 17-20 PLC except TSX 172 2028/3428/2012/4012 software version II < 05.

Notes

www.rgbautomatyka.pl

Apart from the specific product features indicated on this follow-up sheet, the general instructions for installing the TSX 17B 1428 Micro-PLC are the same as those given in the TSX D11 000E Installation Manual.

1 Planning the Installation (see Section 1 in TSX D11 000E)

1.1 Description of TSX 17B 1428 PLC

These systems comprise:

- a 110/240 VAC power supply ① that provides a 24 VDC, 250 mA supply output ② for 24 VDC sensors connected to the TSX 17,
- a CPU with programming port ③ and status display ④,
- an internal 24 Kbyte RAM program memory (and 2 Kbytes of data) that can be backed up. The battery is located in ⑤ and has a 1 year service life.
- a location ⑥ for a plug-in EEPROM or EPROM memory cartridge for saving user programs,
- a location ⑭ for a PL7-2 software cartridge containing the BATIBUS function,
- 14 discrete I/O with front panel status display ⑨:
  - 12 isolated 24 VDC inputs ⑦
  - 2 relay outputs ⑧
- a BATIBUS network ⑫ with front panel status display ⑨,
- a 15 V, 150 mA power supply ⑬ energizing the BATIBUS network,
- a 9-pin I/O bus extension connector ⑩,
- 2 removable terminal strips ⑪ with captive screw terminals,
- a ground connector ⑮.

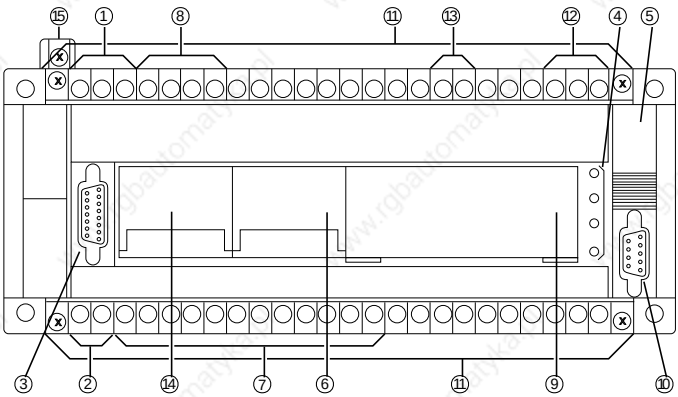

1.2 BATIBUS Network Status Display

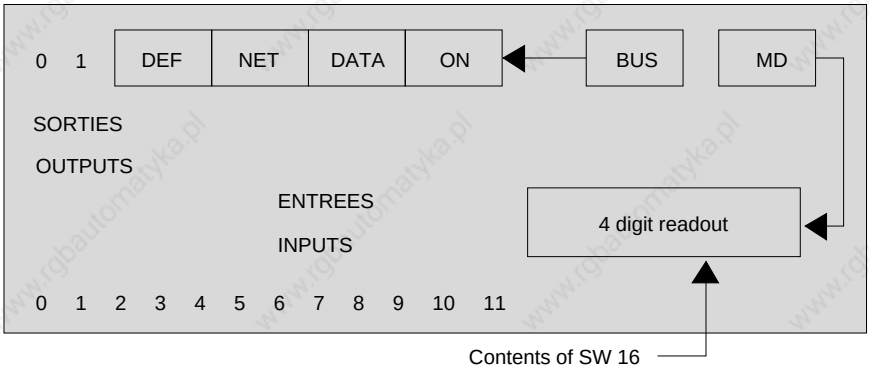

DEF	This LED comes on when there is a BATIBUS fault
NET	This LED comes on when one of the system components is faulty, i.e. no acknowledgement or BATIBUS interface problem
DATA	This LED flashes during transmission or reception
ON	This LED comes on when the line is energized by 15 V. It thus permits detection of line short-circuits and of a cross-connected module.

Important

The contents of word SW16 can be displayed in 4 digit BCD format by setting SY 14 to state 1 through PL7-2 programming. In this case the status display of both outputs (0,1) and of the BATIBUS network (DEF, NET, DATA, ON) is no longer active.

2 Mounting

- Basic PLC/extension compatibility: as for TSX 172 3428 (see Section 2.3 in TSX D11 000E Manual)
- overall dimensions: as for TSX 172 3428 (see Section 2.4 in TSX D11 000E Manual)

3 Wiring (see Section 3 - TSX D11 000E)

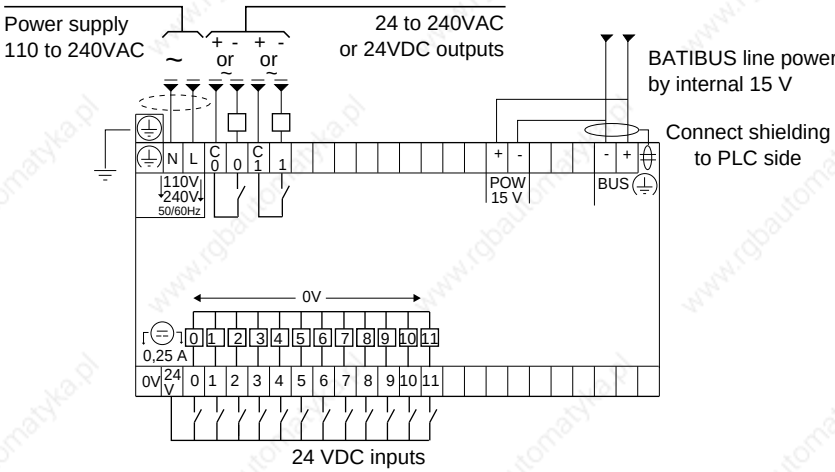

4 Setting into Service - Maintenance

(See Section 4 in TSX D11 000E)

5 Technical Characteristics

5.1 Power Supply Characteristics: the same 110/240 V power supply as for TSX 172 3428 (see Section 5.1 in TSX D11 000E)

5.2 24 VDC Input Characteristics: as for TSX 172 3428

5.3 Discrete Output Characteristics: relay outputs as for TSX 172 3428

5.4 BATIBUS Network Characteristics

5.4.1 Principle of Coding/Decoding

The modules in the network are powered by 15 V supplied by the TSX 17B 1428 PLC. Modulation is achieved by pinching off the **powered line**. The physical layer transmits or receives the coded frames.

Line at rest : 15 V (logic state of 0)
Pinched line : 0 V (logic state of 1)

www.rgbautomatyka.pl

5.4.2 15 V Power Supply Characteristics

• No load voltage	15.5 V ± 10%
• Voltage under load	13.8 V min. at 150 mA
• Pinch-off current	300 mA ± 10%
• Isolation between mains and bus	4000 Vrms
• Capacitance between line and mains	50 pF

5.4.3 BATIBUS Line Characteristics

• Transmitter Network	
- Voltage across line terminals at pinch-off	1.5 V max. with 330 mA
- Leakage current on line at rest	50 µA at 18 V
• Receiver Network	
- Input resistance	500 KΩ max.
- Line resistance	12 Ω max. between power supply and most distant point
- Line voltage drop	3.6 V max.
- Line capacitance	250 nF max.
- Spurious capacitance at a point	50 pF max.
- Pinch-off-to-breakdown and breakdown-to-pinch-off switchover times	2 µs min., 5 µs max. with no load on line
- Modulation rate	4800 bps (bits per second)

5.4.4 Recommended Cable

• BATIBUS cable (P/N 63715) marketed by Merlin Gerin.

Name	Area mm^2	Isolation (1)	Type or shielding	Screen	I m	L m	R/km
BATIBUS	0.75	4 KV	flexible	yes	250	1900	46.2
BATIBUS	1.5	4 KV	flexible	yes	500	2500	24.2
BATIBUS	2.5	4 KV	flexible	yes	600	2500	15.2

I : max. length from processor (or sub-station) to most distant BATIBUS point.
L : max. length of overall BATIBUS network.
(1) : isolation between the conductors and the screen or shielding when present; otherwise between the conductors and the outside surface of the wire.

5.4.5 Special Wiring Precautions

Whenever possible keep the BATIBUS cable at least 20 cm away from power cables.

6 Service Conditions

(see Section 6 in TSX D11 000E)

The general rules for installing a TSX DMF 242A I/O extension block are the same as those described in the TSX 17 Micro-PLC Installation Manual (TSX D11000E). Specific differences that only apply to the TSX 171 2022 are described in this sheet.

1. Planning the Installation

(see Section 1 TSX 17 Installation Manual).

Description

24 discrete I/0, 110 VAC inputs, relay outputs, AC power supply.

This extension block comprises :

- a 110/240VAC power supply ① that provides a 24 VDC, 250mA sensor supply output ②,
- 24 discrete I/O with a front panel status display ⑤,
  - 8 isolated 110VAC inputs ③,
  - 16 relay outputs ④,
- an I/0 bus connection or extension block fault LED ⑩,
- a 15-pin I/0 bus input connector ⑥,
- a 9-pin I/0 bus output connector ⑦,
- 2 removable terminal blocks with captive screw-terminals ⑧,
- a ground connector ⑨.

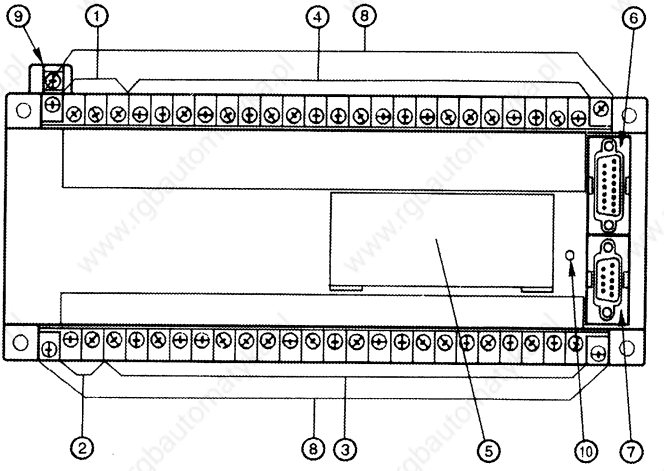

2. Mounting

(see Section 2 TSX 17 Installation Manual).

- Basic-PLC/Extension Compatibility : identical to TSX DMF 342 A (see Sub-section 2.3 TSX 17 Installation Manual),
- Dimensions : identical to TSX DMF 342 A (see Sub-section 2.4 TSX 17 Installation Manual).

3. Raccordements
(voir chapitre 3 TSX D11 000F)

3. Wiring
(see Section 3 TSX 17 Installation Manual)

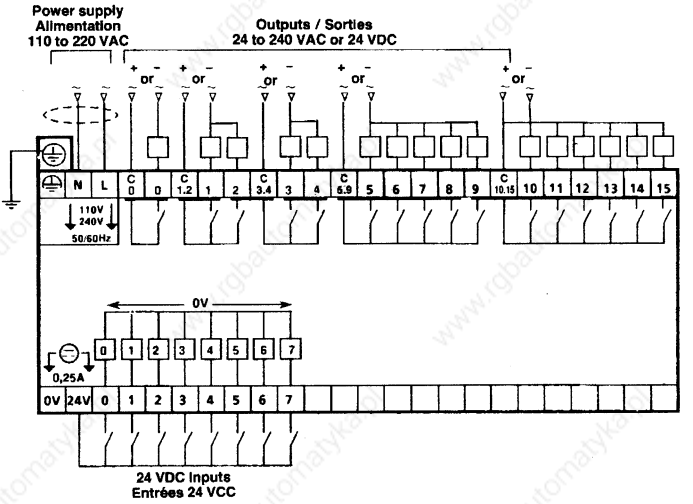

4. Mise en service - Maintenance
(voir chapitre 4 TSX D11 000F)

4. Setting into Service - Maintenance
(see Section 4 TSX 17 Installation Manual)

5. Conditions générales de mise en oeuvre
(voir chapitre 5 TSX D11 000F)

- alimentation 110/240VCA :
  identique à DMF 342 A
  (voir chapitre 5.1 TSX D11 000F)
- entrées 24 VCC :
  identique à TSX DMF 342 A
  (voir chapitre 5.2 TSX D11 000F)
- sorties relais :
  identique à TSX DMF 342 A
  (voir chapitre 5.4 TSX D11 000F)

5. Technical Characteristics
(see Sub-section 5 TSX 17 Installation Manual)

- 110/240VCA Power Supply :
  Identical to TSX DMF 342 A
  (see Sub-section 5.1 TSX 17 Installation Manual)
- 24VDC Inputs :
  Identical to TSX DMF 342 A
  (see Sub-section 5.2 TSX 17 Installation Manual)
- Relay outputs :
  Identical to TSX DMF 342 A
  (see Sub-section 5.4 TSX 17 Installation Manual)

6. Conditions de service
(voir chapitre 6 TSX D11 000F)

6. Service Conditions
(see Section 6 TSX 17 Installation Manual)