Lenze

Technical Specifications

Inverter Series 760

The Simplatron 760 range of inverters comprises 7 static frequency inverters for standard three-phase a.c. motors from 0,75 ... 7,5 kW.

1. Characteristics

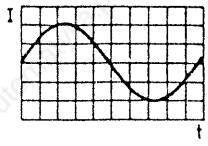

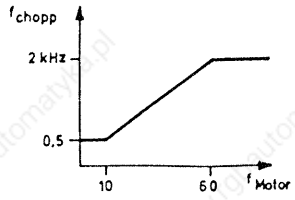

- Sinusoidal pulse-width modulation in noise-immune CMOS gate-arrays. Motor noise has been reduced by harmonizing the motor and chopper frequencies.

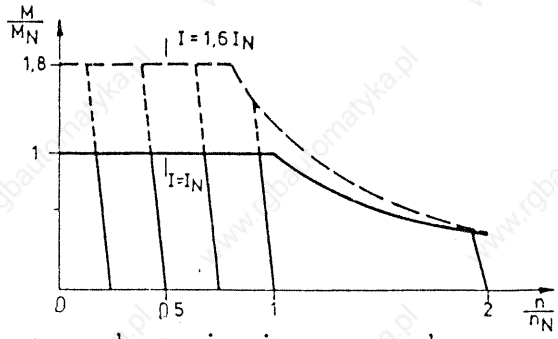

- The current control method used ensures constant magnetic flux. This ensures good response and ensures stall-free overload and starting behaviour.
  The dynamic current limit is
  $I_{max} = 1,6 \times I_N$ for t = 20 s
  giving up to 1,8 times the rated motor torque. (dependent on cos φ of motor)

- Further standard functions: isolated control inputs - short-circuit-protected power outputs - earth-leakage-protection with mains choke - set value integrator with seperately adjustable acceleration and deceleration ramps - slip compensation - program switch setting: magnetizing current control or U/F-characteristics control, e.g. for multi-motor drives - fault indication system with TRIP function.

- Sturdy mechanical design as a result of the diecast heatsink chassis and extruded side parts with covering to provide contact-voltage protection. Consistent use throughout of modern hybrid and gate-array technology and transistor modules.

  The standard inverters can be retro-fitted with additional control modules.

2. Technical Data

Inverter type	Output power	Output voltage	Mains voltage 50 - 60 Hz	Mains current	Rated motor power	Power loss at $I = I_N$, f = 50 Hz	Rated inverter current	Current limit	Output frequency	Max. master voltage	Ambient temperature	Dimensions h x w x d weight
	P_{el}/kVA	U_{phase}/V	U_{mains}/V	I/A	P_N/kW	P_V/W	I_N/A	I_{max}/A	f/Hz	U_{LeitN}/V	T_u/°C	mm
761	1,5	0 ... U_{mains}	190 ... 260 V ± 0 %	9,0	0,75	60	4,0	6,5	0 ... 110	10 ... 120	0 ... 45°	300 x 205 x 225
762	2,6			14,0	1,5	90	7,0	11,0				
763	3,6			17,0	2,2	160	9,5	15,0				7 kg
764	3,6		3 x 330 ... 450 V ± 0 %	4,5	2,2	70	5,5	9,0				360 x 320 x 260
765	6,2			8,0	4,0	180	9,5	15,0				
766	8,5			11,0	5,5	250	13,0	21,0				14 kg
767	10,9			15,5	7,5	340	16,5	26,0				15 kg

Bearb. Drawn	EK/sti	1.12.86	Lenze GmbH & Co KG Aerzen, 3250 Hameln	Zeichnungs-Nr.	Drawing-No.
Geprüft: Checked:	[signature]			MB 33.0722/1	K

All rights reserved

1.09.1990

3. Connection Diagram 761, 762, 763

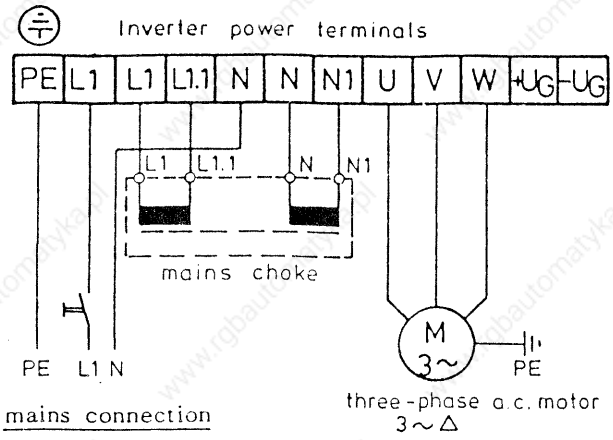

mains connection

190 ... 260 V~ ± 0
50 ... 60 Hz

Caution:

Terminals carry mains voltage for up to 30 s after switch-off

Control outputs 12,13,60,61,62 carry mains voltage

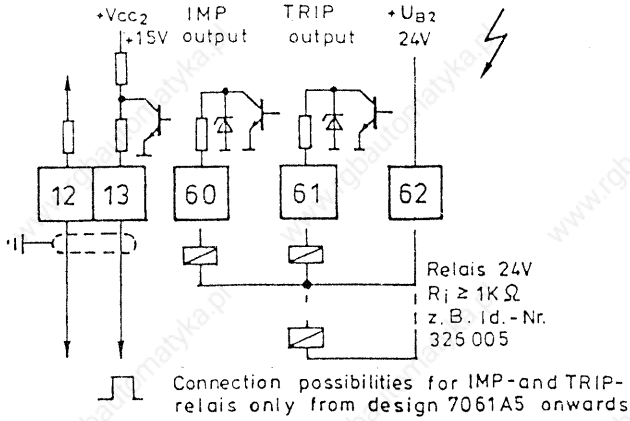

Connection possibilities for IMP-and TRIP-relais only from design 7061A5 onwards

MCP → digital frequency meter connection R ≥ 20 kΩ
Pulse frequency output equal to 6 times the rotational field frequency (fd)* .

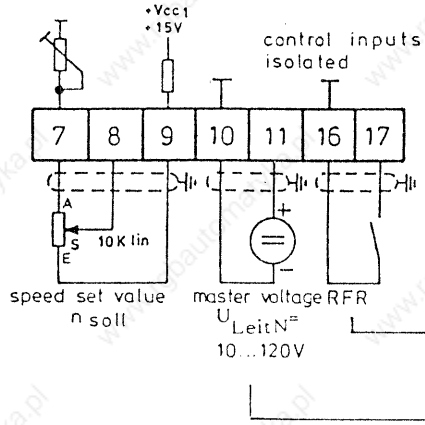

- The inverter is released when switch RFR is closed.
- Master voltage input instead of the set value potentiometer
  U_{Leit} min = 0 ... + 10 V
  U_{Leit} max = 0 ... + 120 V

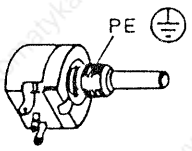

I_{Leit} = 0-20 mA
I_{Leit} = 4-20 mA

- Current source input instead of the master voltage
  1. 0 - 20 mA: fit R120 = 511Ω
  2. 4 - 20 mA: fit R120 = 604Ω and R313 = 63,4 kΩ

Instructions for Connection and Installation

Install the inverter with the terminal strip at the bottom. Ensure that there is a free space of 100 mm at the top and bottom of the inverter and 100 mm at the sides in order to maintain the flow of air through the heatsink and inverter. The maximum air intake temperature is + 45° C and maximum air output temperature is + 55° C. The inverters are designed for 4-pole motors with the rated powers stated in the technical data. In case of earth-leakage the mains choke limits the rise in current. Pulsating dc. fault currents occur as the result of earth-leakage; for this reason observe VDE 0160/01.86 as relevant for fault current protective devices. The smallest mains loading occurs when using the recommended mains chokes. The inverter type 763 is to be operated with recommended mains choke only.

Please consult the manufacturer when wanting to switch between inverter and motor.

* The inverter is protected by the safety resistors R416 and R527 in case of earth fault at the control output (The resistors attain a high resistance value).

Bearb. Drawn	EK/sti	1.12.86	Lenze GmbH & Co KG Aerzen, 3250 Hameln	Zeichnungs-Nr. Drawing-No. MB 33.0722/2 K
Geprüft: Checked:				

All rights reserved

4. Connection Diagram 764, 765, 766, 767

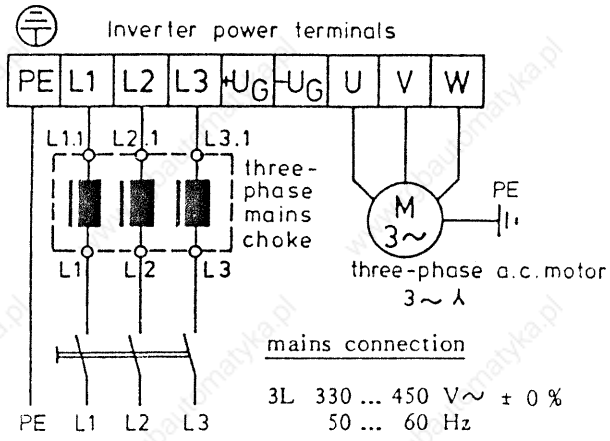

Caution: ↯

Terminals carry mains voltage for up to 120 s after switch-off

Control outputs 12,13,60,61,62 carry mains voltage

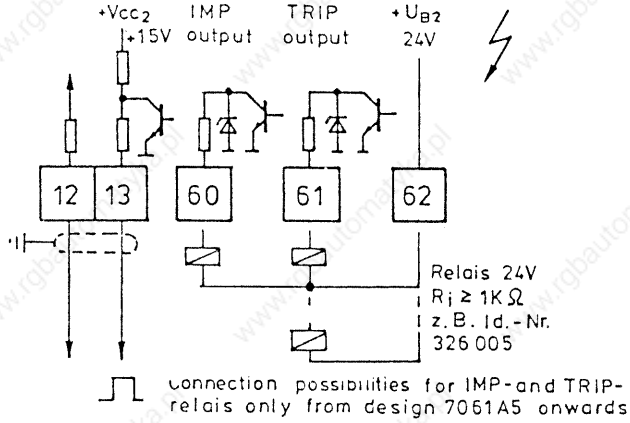

connection possibilities for IMP- and TRIP-relais only from design 7061A5 onwards

MCr → digital frequency meter connection R ≥ 20 kΩ
Pulse frequency output equal to 6 times the rotational field frequency (fd)* .

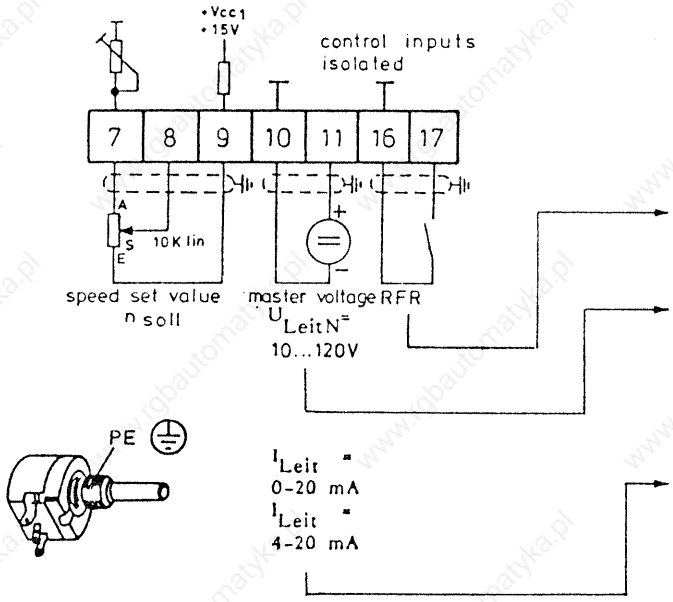

- The inverter is released when switch RFR is closed.
- Master voltage input instead of the set value potentiometer
  U_{Leit} min = 0 ... + 10 V
  U_{Leit} max = 0 ... + 120 V
- Current source input instead of the master voltage
  1. 0 - 20 mA: fit R120 = 511 Ω
  2. 4 - 20 mA: fit R120 = 604 Ω and R313 = 63,4 kΩ

Instructions for Connection and Installation

Install the inverter with the terminal strip at the bottom. Ensure that there is a free space of 100 mm at the top and bottom of the inverter and 100 mm at the sides in order to maintain the flow of air through the heatsink and inverter. The maximum air intake temperature is + 45° C and maximum air output temperature is + 55° C. The inverters are designed for 4-pole motors with the rated powers stated in the technical data. Inverters 764,765, 766 and 767 have to be operated only with the mains chokes listed. For three-phase bridges, a d.c. component in the fault current can prevent triggering an FI switch in case of earth-fault. For this reason, an FI switch may be used only in conjunction with other safety measures (e.g. earthing) in accordance with VDE 0160/01.86.

Please consult the manufacturer when wanting to switch between inverter and motor.

* The inverter is protected by the safety resistors R416 and R527 in case of earth fault at the control output (The resistors attain a high resistance value).

For these instructions we reserve All rights reserved

5. Trimmers, State Indicators on Control Board 7061

Works settings

S3 = ON 761, 762, 763
S3 = OFF 764, 765, 766, 767

S1 = 1, magnetizing current control

$U_{Leit} = {}^{U}_{LeitN} = 10$ V

I_{max} = tech. data = 1,6 x I_N inverter

I_0 = 0,6 x I_N inverter

n_{min}, U_{min} = anticlockwise

U/f = 220 V / 50 Hz (761-763)
380 V / 50 Hz (764-767)

$T_{ir} = T_{if}$ = 3 s, S2 = 1

n_{max} = 1500 min^{-1}

SLP on $\frac{\Delta n}{n_N} \leq \pm 1$ % at 25 Hz and rated current

⊗ $+V_{cc1}$	green LED $+V_{cc1}$
▭ S2	S2 = OFF Ti = 0,1 to 1 s S2 = 1 Ti = 1 to 20 s
⊠ T_{ir}	accel. time
⊠ T_{if}	decel. time
⊠ n_{min}	min. speed 0 to 0,4 n_{nom}
⊠ U_{Leit}	master voltage attenuator

▭ S3	single phase/three phase inverters S3 = ON 761-763 (single phase); S3 = OFF 764-767 (three phase)
⊠ U_{min}	voltage boost in the lower frequency range up to 25 Hz when using U/f characteristics control
⊠ U/f	max. output voltage adjustable from 45 ... 104 Hz
⊗ $+V_{cc2}$	green LED control voltage indicator
⊗ IMP	yellow LED lights up when the power stages are inhibited
⊗ TRIP	red LED lights up when TRIP is set
▭ S1	program control S1 = 1 magnetizing current control S1 = OFF U/f characteristic control
⊠ I_0	idling current, only when S1 = 1 = ON
⊠ SLP	slip compensation
⊠ n_{max}	setting max. speed 0,7 ... 2,2 n_{nom}
⊠ I_{max}	setting max. inverter current 0,16 ... 1,6 I_N
⊗ LED I_{max}	red LED lights up when motor current = set max. current I_{max}

For these technical data ... All rights reserved

6. Setting Instructions (necessary only in case of deviation from works setting)

6.1 Standard-setting Instructions (in case of existing works setting)

6.1.1 U/f Characteristic (necessary when changing the rated frequency)

- S1 = OFF, voltmeter between phases U and V
- set value potentiometer at rated frequency e.g. 60 Hz
- switch on the mains
- adjust the trimmer U/f until the maximum output voltage is set
- switch off the mains power, reset S1 to the required mode of operation

6.1.2 Maximum current I_{max}

- connect the rms responsive ammeter (e.g. moving iron meter) into one motor phase
- set the program switch S1 = OFF = 0
- adjust the set value potentiometer to approx. f_d = 5 Hz
- turn U_{min} fully clockwise
- turn I_{max} fully anticlockwise
- switch on the mains
- turn I_{max} clockwise until the required maximum current flows. The LED I_{max} lights up when I_{Motor} reaches the current limit that has been set.
- switch off the mains power, turn U_{min} fully anticlockwise, S1 = 1 = ON

6.1.3 Idling current I_0

- set the program switch to S1 = 1 = ON
- adjust the set value potentiometer to approx. 5 Hz
- turn U_{min} fully anticlockwise
- connect the rms responsive ammeter (e.g. moving iron meter) into the motor phase

cos φ of motor type plate

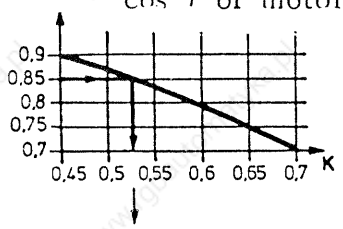

$I_0 = K \times I_{N\ motor}$

- switch on the mains
- using the I_0 potentiometer set the idling current to $I_0 = K \times I_{N\ Motor}$
- switch off the mains power

6.1.4 U_{min}-voltage boost (this is necessary only for the operation mode S1 = OFF = U/f characteristic control)

- set S1 = OFF, connect the rms responsive ammeter (e.g. moving iron meter) into the motor phase and the set value potentiometer to approx. 5 Hz

- using U_{min} raise the motor voltage until the drive produces the torque required. Since in this mode of operation there is no load-dependent control of the motor current, the motor current must not exceed the rated current of inverter or motor.

6.1.5 Slip compensation

In the frequency range 10 ... 50 Hz the speed reduction caused by increasing the load up to the rated inverter current can be partially compensated by turning the trimmer SLP clockwise.

6.1.6 Trimmer setting ranges

n_{min}, n_{max}, T_{ir}, T_{if}-trimmer (set T_{if} so that the IMP LED does not light up during braking).

6.1.7 Master voltage attenuator

Turn n_{max} fully clockwise.
Apply a master ref. voltage instead of using the set value potentiometer.
Using the trimmer U_{Leit} the max. master ref. voltage is attenuated until the voltage between terminals 8 and 10 (GND) is +10 V.

6.2 Additional setting instructions (necessary only when the works settings no longer exist)

6.2.1 Preliminary setting (when disconnected from the mains power supply)

S1 = OFF

S2 = ON

S3 = ON 761 - 763
OFF 764 - 767

T_{ir}, if = fully anticlockwise

n_{min} = fully anticlockwise

U_{Leit} = fully clockwise for potentiometer operation
fully anticlockwise for U_{Leit} operation

U_{min} = fully anticlockwise

U/f = centre position

I_0 = fully anticlockwise

SLP = fully anticlockwise

n_{max} = centre position

I_{max} = centre position

Measuring instruments:
- (A) Ammeter (rms responsive ammeter!) connected into one motor phase
- (F) Frequency meter
- (U) Voltage meter (rms responsive meter!) between two phases

All rights reserved

6.2.2 Settings

Potentiometer operation	U_{Leit} operation	A	F	U
- Turn the set value potentiometer to the min. position	- Set max. master voltage			
- Switch on the mains supply	- Switch on the mains supply			
	- Adjust trimmer U_{Leit} until the voltage between terminals 8 and 10 (GND) is +10 V			
- Using trimmer n_{min} to set approx. f_d = 5 Hz Turn trimmer U_{min} fully clockwise Turn trimmer I_{max} until required max. motor current flows Turn trimmer U_{min} fully anticlockwise	- Using master voltage to set f_d = 5 Hz Turn trimmer U_{min} fully clockwise Turn trimmer I_{max} until required max. motor current flows Turn trimmer U_{min} fully anticlockwise	x	x	
- Turn the set value potentiometer to the max. position Using trimmer n_{max} to set 50 Hz (or 60 Hz) Adjust trimmer U/f until max. voltage e.g. 220 V or 240 V (761-763) or 380 V or 415 V (764-767) is reached	- Set max. master voltage Using trimmer n_{max} to set 50 Hz (or 60 Hz) Adjust trimmer U/f until max. voltage e.g. 220 V or 240 V (761-763) or 380 V or 415 V (764-767) is reached		x	x
- Turn the set value potentiometer to the min. position (frequency approx. 5 Hz; if necessary correct using trimmer n_{min})	- Using master voltage to set 5 Hz			

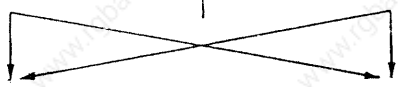

U/f control	I_0 control			
- Using trimmer U_{min} to raise the motor current until the drive produces the torque required and runs smoothly (typical value 0,8 I_{MN}; max. value 1 I_{MN})	- S1 = ON Using trimmer I_0 to set the idling current I_0 = K x $I_{N\ Motor}$ (K in accordance with diagram ch. 6.1.3)	x	x	

- Slip compensation can be obtained to a large extent by turning the trimmer SLP clockwise
- Using the programme switch S2 and the trimmers T_{ir}, T_{if} select accel. and decel. time

Potentiometer operation (cont.)	U_{Leit} operation (cont.)			
- Using trimmer n_{min} to set the required minimum frequency	- Set max. master voltage		x	
- Using trimmer n_{max} to set the required maximum frequency	Using trimmer n_{max} to set the required maximum frequency			

7. Modes of operation

Use the program switch S1 to choose between magnetizing current control and U/f characteristic control modes.

7.1 Magnetizing current control S1 = 1

The three-phase a.c. drive produces optimum control characteristics using magnetizing current control. In this case the motor's magnetizing current is detected in the inverter and maintained constant.

7.1.1 Operating characteristics

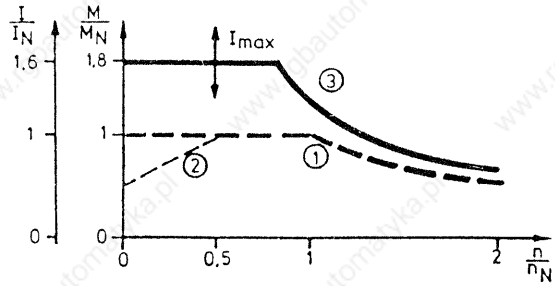

The diagram shows the characteristic of an induction motor with magnetizing current control.

① Torque when loaded to rated current.

② In the case of continuous operation below 25 Hz of self-ventilated motors thermal considerations are significant which could result in a reduction of the load, depending on the number of poles and make of motor.
However, as compared with, the U/f characteristic control, a reduction of the inverter output voltage is not necessary since the motor current consumption adjusts automatically to the load.

③ This shows the limiting characteristic when operating in the current limit I_{max} with 1,6 times the inverter rated current for 20 s. Very high torque is available in all the motor's operating states, e.g. when accelerating, for alternating load peaks and even in cases of a blocked motor, since the motor current consumption from idling current I_0 to inverter current limit I_{max} is determined solely by the load. As a result of this the inverter drive achieves the ruggedness previously attributed only to mains operation.

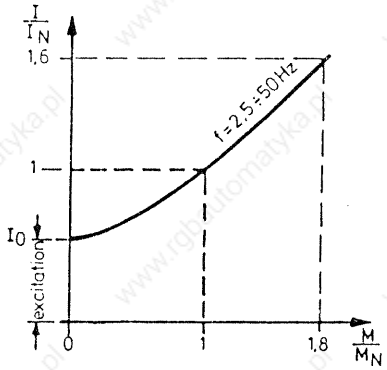

7.1.2 Slip compensation

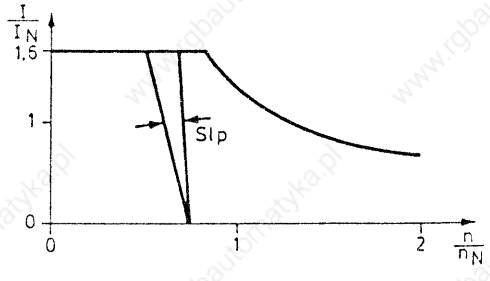

Slip compensation as a standard feature makes it possible to compensate partially the reduction in speed which is typical for induction motors under load. Depending on the number of poles and make of motor, speed reductions of ($\frac{\Delta n}{n_{nom.}}$) approx. ± 1 % can be achieved between idle running M = M_0 and rated load torque M_N in the frequency range 10 ... 50 Hz. Slip compensation is ineffective in the case of motor currents exceeding I_N and it does not take temperature-dependent motor slip changes into consideration. Speed control with tacho feedback is recommended for more exacting requirements.

For these Instructions the Copyright and All rights reserved

7.2 U/f Characteristic control S1 = OFF

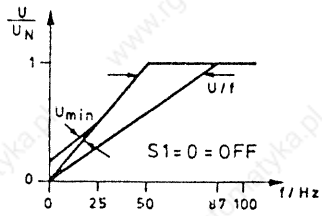

This mode of operation is recommended in the case of group drives when the magnetizing current control cannot level out the different load states of several motors connected to one inverter.

The inverter output voltage then follows exclusively the U/f characteristic adjusted by the trimmer U/f; the magnetizing current control operating parallel to this is switched off using the program switch S1. The motor voltage can be raised using the trimmer U_{min} in the frequency range below 25 Hz. Since there is no load-dependent motor current control by means of the magnetizing current control in this mode of operation (the I_{max} limitation is, of course, acting) thermal considerations determine that U_{min} at 5 Hz may only be raised so far that I_N of the inverter is not exceeded.

U/f regulating range f = 45 ... 87 Hz at mains rated current 220/380 V

U_{min} active at f < 25 Hz

8. Current limit and current monitoring

Maximum operating safety is obtained by the inverter's two current limits and two current monitoring systems with trip feature:

I_{max} An adjustable current limit of the max. permissible phase current effective value at the trimmer I_{max} from 0,16 ... 1,6 I_N. When the I_{max} current is reached the motor current and frequency are lowered with no risk of stalling. A drive which is blocked to the point of standstill retains maximum torque with I_{max}, e.g. 1,8 M_N and restarts with this after being released.

Ixt When the actual value of the phase current reaches 1,1 ... 1,6 times the value of the inverter rated current I_N, the inverter is tripped after t = 20 s (± 10 %). It can be restarted only be disconnecting the inverter from the mains and then reconnecting it.

The controller is rated for continnous current of 1,2 x I_N. With intermittent loads the Ixt diagramme shown must not be exceeded.

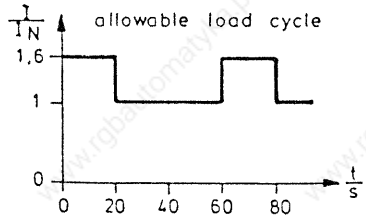

I_{clamp} In order to protect the power transistors the inverters are equipped with fast selective peak current limits which limit the peak value of the phase currents ② in accelerating or alternating load

I_{TRIP} operation, until the I_{max} current limit is reached ① . In the case of a fast rise of overcurrent the inverter triggers the TRIP function ③ .

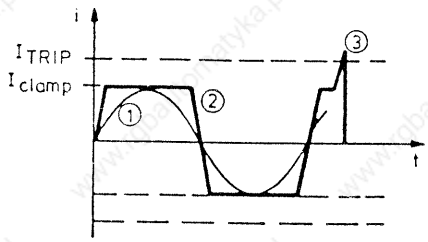

8.1 Voltage monitoring

(Values in brackets for inverters 764 - 767)

Mains switch-on delay:

The inverter is ready to operate 0,5 s after switching on the mains.

The mains should be switched only to make the unit ready to operate.

The charging of the d.c. link capacitor is controlled by a resistor and an electromechanical relay. (In the case of a 3-minute switching cycle these have a life expectancy of 10 years in single-shift operation = 320.000 switchings)
Mains voltages larger than 260 V ~ (450 V ~) are not permissible and, depending on their size and duration, can damage the inverter. Overvoltages between 270 V ~ (467 V ~) and 293 V ~ (505 V ~) are signalled by the LED IMP. Higher voltages also set the fault indicator TRIP.

In braking operation the deceleration time T_{if} must be adjusted so that the LED IMP does not light up. This avoids d.c. link voltages larger than 382 V d.c. (660 V d.c.).

		d.c. link U = /V	mains voltage U ~ /V
mains undervoltage monitoring	on		185 (320)
→ IMP	off		185 (320)
charging relay control	on	239 (414)	169 (292)
→ relay	off	157 (271)	111 (192)
d.c. link overvoltage monitoring	on	382 (660)	270 (467)
→ IMP	off	368 (636)	260 (450)
d.c. link overvoltage monitoring	on	415 (715)	293 (505)
→ TRIP	off	0	0 (0)

For these Instructions the following applies: All rights reserved

8.2 Temperature monitoring

The standard design of inverter types 763, 764, 765, 766 and 767 includes temperature monitoring on the transistor heatsink which sets TRIP at +75°C.

8.3 Fault indication system

Fault indicator TRIP can be reset only by first switching off the mains power supply and then switching it on again.

(The values in brackets are for inverters 764 - 767)

Function	Effect	Indication
Mains undervoltage < 185 V~ (320) Mains overvoltage $270 \leq U < 293$ V~ (467) (505) Braking operation $382 \leq U_G < 415$ (660) (715)	The power stages are inhibited for the duration of the fault →Set T_{if} higher so that IMP does not light up in the braking phase.	IMP lights up
Mains overvoltage ≥ 293 V~ (505) Braking operation with more powerful motor ($P > P_N$-inverter) $U_G \geq 415$ V (715)	Power stages are inhibited and latched	TRIP lights up
Short-circuit UVW Short-circuit UVW to PE Overtemperature for 763 - 767	Reset only after the fault has been removed by switching off the mains power supply and then switching it on again	IMP lights up
The inverter release terminals 16 and 17 are not bridged	Power stages are inhibited	IMP lights up
Isolated control voltage indication Non-isolated control voltage indication		$\pm V_{cc1}$ lights up $\pm V_{cc2}$ lights up
Drive accelerates or drive overloaded in current limit	Inverter maximum current I_{max} is reached	I_{max} lights up
Drive operates for 20 s between 1,1 I_N ... 1,6 I_N	TRIP is set after 20 s	TRIP lights up and IMP lights up

9. Fuse Protection, Mains Choke

Inverters	761	762	763	764	765	766	767
Mains fuses F1 (F1 F2 F3) Part number	FF 16 A 6,3 x 32 305 725	FF 20 A 10 x 38 321 118	FF 30 A 10 x 38 321 554	FF 10 A 6,3 x 32 307 855	FF 16 A 6,3 x 32 305 725	FF 20 A 10 x 38 321 118	FF 25 10 x 38 307 308
Transformer fuse F4 Part number	T 1,6 A 5 x 20 305 701			M 2,0 A 5 x 30 325 144			
d.c. link fuse F5 Part number	FF 12,5A 6,3 x 32 324 802	FF 16 A 6,3 x 32 305 725	FF 25 A 10 x 38 307 308	FF 16 A 10 x 38 309 106	FF 20 A 10 x 38 321 118	FF 25 A 10 x 38 307 308	FF 30 10 x 38 321 554
Mains choke Part number	2x1,24mH 9 A 324 752	2x0,6mH 14 A 324 753	2x0,4mH 17 A 324 754	3x2,5mH 7 A 325 293	3x1,6mH 12 A 325 294	3x1,2mH 17 A 322 149	3x1,2mH 25 A 322 148
Dimensions							
a	96	96	96	96	120	120	150
b	86	86	86	61	70	66	75
c	80	80	80	84	90	110	140
d	70	70	70	45	53	53	60
e	112	112	112	130	148	166	80
k	90	90	90	74	85	80	-
m	6	6	6	6	6	5	5
o	-	-	-	118	148	-	-
Inverter Part number	324 511	324 512	324 513	324 514	324 515	324 516	326 460

Our these technische Unterlage behalten wir uns alle Rechte vor.
All rights reserved

10. Dimensions

761-763

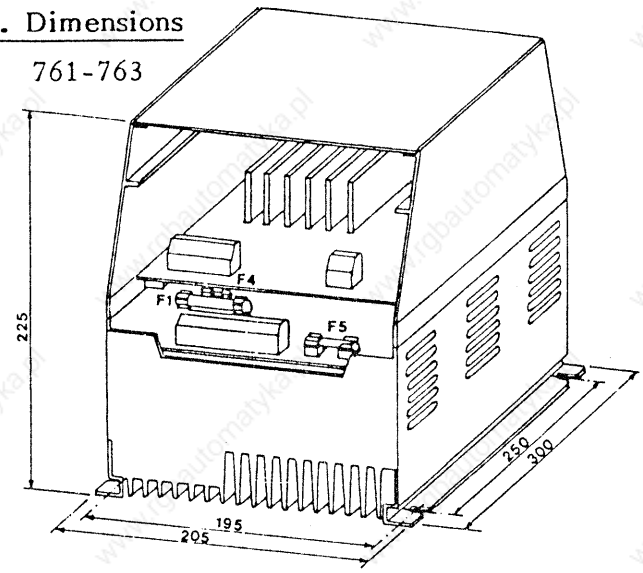

761-763

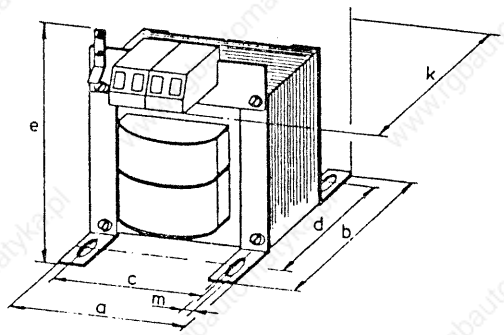

764-766

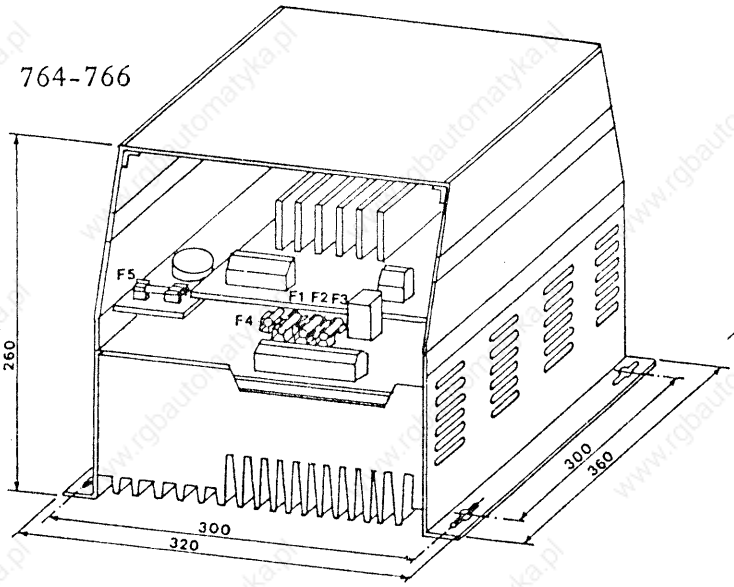

764, 765

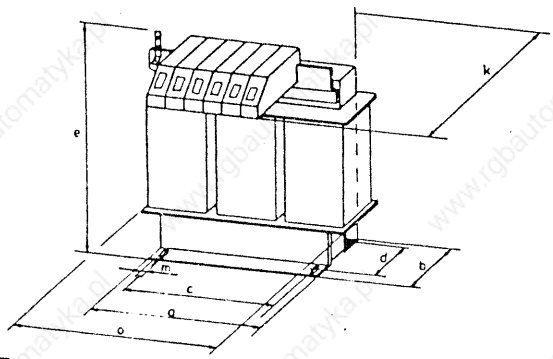

767

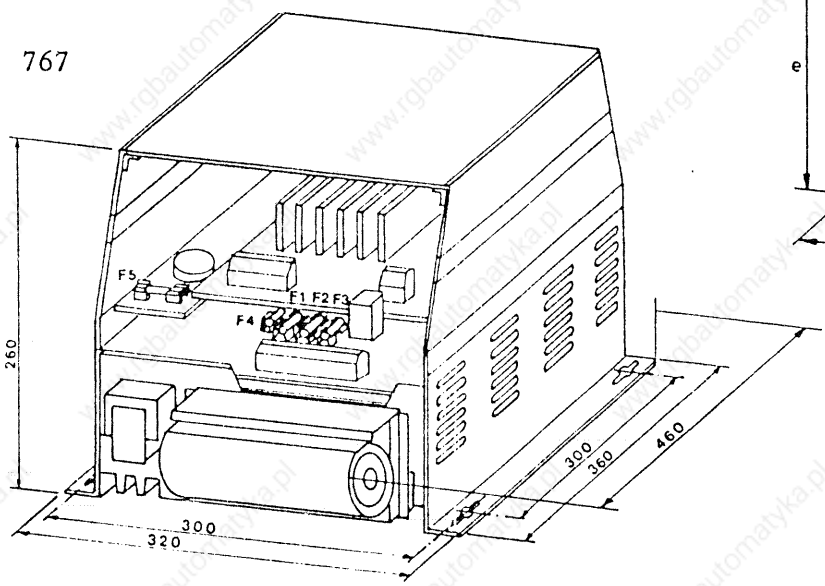

766, 767

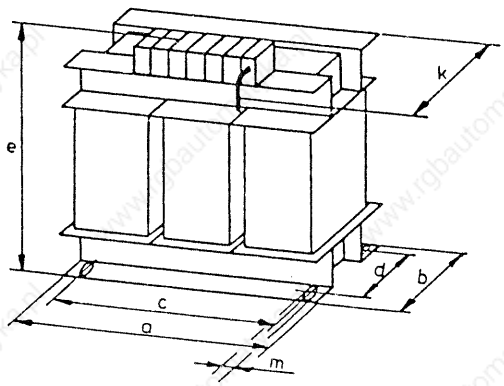

Für diese Unterlage behalten wir uns alle Rechte vor
All rights reserved

Bearb. Drawn	EK/sti	1.12.86	Lenze GmbH & Co KG Aerzen, 3250 Hameln	Zeichnungs-Nr. Drawing-No. MB 33.0722/13 K
Geprüft: Checked:				