Parker
Automation

Synchronous Servo Motors

Catalogue: 192-060011 N5 / UK
Version 5 / December 2000

www.rgbautomatyka.pl

Contents

Synchronous servo motors manufactured by Parker Hannifin, Elektromechanik Europa 4

Standard servo motors of the HJ range 5

Options 6

Motor overview of HJ – motors 7

Dimensional drawings 8

HJ96C6-44S 8
HJ116C6-64S / HJ116E6-88S 8
HJ155A8-88S / HJ155E8-130S / HJ155G8-135S 8
HJ155G8-135S with fan 9
HJ190J8-150S with fan 9

Engine characteristics curves 10

Highly dynamic synchronous servo motors HDY 14

Options 15

Motor overview of HDY – motors 16

Dimensional drawings 17

HDY55C4-32S 17
HDY70C4-44S / HDY70E4-44S 17
HDY92C4-44S / HDY92E4-44S 17
HDY115A6-64S / HDY115A6-88S / HDY115C6-88S / HDY115E6-88S / HDY115G6-88S 18
HDY142C6-88S / HDY142G6-88S 18

Motor characteristics curves 19

Connecting cable to motor 25

Resolver cable for HJ and HDY motors 25
Motor cable for HJ and HDY – motors 26
SinCos© cable for HJ and HDY motors 28

Order code motors 29

Order code cables 30

Synchronous servo motors manufactured by Parker Hannifin, Elektromechanik Europa

Todays' levels of electrical drive technology mean that different specific synchronous servo motors are required depending on the application in question.

HDY synchronous servo motors

The outstanding feature of the HDY synchronous servo motors is their low rotor inertia torque. Typical applications for these motors would be packaging machines, automatic press or assembly equipment, in which rapid acceleration and delay is required.

5 model sizes are available with edge lengths of 55, 70, 92, 115 and 142 in a power range of between 0.4 and 21 Nm.

HJ synchronous servo motors

The motors of the HJ range have high-quality Neodym iron-boron magnets and their rotor inertia torque is 2 to 3 times higher. The shafts (with large diameters) and the design of the rotor and bearing ensure that these motors have a higher level of shaft strength. Parker's HJ synchronous servo motors have the outstanding feature of good synchronous running properties even when running at low speeds. Typical applications for these motors would be in tooling and printing machines as well as handling robots. The HJ motors have smooth surfaces and recesses in the assembly area, which is why dirt deposits are reduced to a minimum and it is very easy to fit this unit to the gearbox.

Four model sizes of 96, 116, 155 and 190 are available in a power range of between 3.0 and 91 Nm.

Both the HDY and HJ ranges can be fitted with a stationary/parking brake on request. As an alternative to the resolver feedback system, SinCos©[1] singleturn or an absolute value sensor SinCos© multiturn system can be supplied.
When fitted with SV drive[2] and the COMPAX compact servo control unit, these motors form a drive concept for use in mains power supplies of between 230V and 460V AC.

[1] The term SinCos© stated in the motor catalogue is a registered trademark of the Stegmann company.
[2] Only supports resolver for determining motor position.

Standard servo motors of the HJ range

General characteristic data:

- Sinusoidal EMC.
- Painted mat black.
- Nitrile shaft seal.
- IP65[3] type of protection (shaft IP64).
- Insulation class F.
- Maximum ambient temperature: 40°C
- Any installation position.
- Standard flange: standard in acc. with DIN 42955; IEC72.
- Basic body: aluminium extruded moulding
- Flange: aluminium
- Connector sockets can be rotated into almost any position (secured using a torque of 10 Nm ±2 Nm)
- Treble torque rating is possible for up to 3 seconds.
- Thermal sensor KTY84-130: arranged in the winding.
  Switch-off temperature of COMPAX: 150°C ±8,5°

Version:

- With spline
- Spur thread
  HJ96: M6x15
  HJ116: M8x20
  HJ155: M12x30
  HJ190: M12x30
- Integrated resolver.

Area of application

- Packaging machines,
- shelf transport technology,
- wood machining,
- handling robots, etc.

[3] with fan IP54

Options

Stationary/parking brake

The motors can be fitted with a stationary/parking brake on request. The brake is fitted in the motor housing behind the A flange (in HJ96 on the B side). This changes the mechanical dimensions of the motor.
The brake is fed voltage by the motor cable.

Technical data for the 24V holding brakes:

Motor	Type	Holding torque [Nm]	J [kgmm^2]	Power [A]	Switch times [ms]	
					open	close
HJ96	Spring pressure brake	5,0	13	0,5	50	20
HJ116	Spring pressure brake	13,5	40	0,5	70	30
HJ155	Spring pressure brake	40,0	200	1,1	110	40
HJ190	Permanent solenoid brake	80,0[4]	3180	1,5	97	53

Attention: The stationary/parking brake does not permit any active braking.

Sensor system

A resolver is fitted in the motors as standard.
The motors can be optionally supplied with the following sensors:

- SinCos© singleturn encoder or
- SinCos© multiturn absolute value sensor

Caution! It's only with SinCos model SCS60 and SCM60
Do not release rear motor cover. The SinCos© is fixed by the rear motor cover.
Danger! If this is released, the motor will behave in an uncontrollable manner.

By using SinCos©, the rated torque must be reduced about 10% for a correct dimensioning.

[4] Applies at 20°C: reduces by 30% when at 120°C.

Motor overview of HJ – motors

Motor type	Continual stall torque	Continual stall current	Resistance	Inductance	Entire torque constant[5]	Rotor inertia	Weight	Length[6] without / with brake	Power voltage ac	Rated speed	Rated torque	Rated current	Rated power
	M_0	I_0	Ω	µH	K_T	J	m	A	U	N_{rated}	M_{rated}	I_{rated}	P_{rated}
HJ ...	Nm	A			Nm/A	kgmm²	kg	mm	V ac	R.P.M	Nm	A_{eff}	kW
96C6-44S	3,0	5,8	1,60	3500	0,51	330	5,0	218 / 258	230	4500	2,6	5,1	1,2
									400	5000	2,5	4,9	1,3
116C6-64S	5,0	6,7	1,80	6800	0,75	750	7,0	221 / 257	230	3000	4,6	6,0	1,4
									400	5000	4,0	5,0	2,1
									460	5000	4,0	5,0	2,1
116E6-88S	7,2	7,0	1,70	7700	1,02	990	8,5	246 / 282	230	2200	6,5	6,2	1,5
									400	4000	5,4	5,3	2,3
									460	4600	5,0	4,7	2,5
155A8-88S	11,5	11,2	0,77	3800	1,02	2200	13,5	237 / 276	400	4000	8,3	8,3	3,5
									460	4600	7,2	7,1	3,6
155E8-130S	25,0	16,0	0,45	5200	1,53	6500	23,0	325 / 369	400	2800	18,5	12,3	5,4
									460	3200	16,9	11,7	5,7
155G8-135S	32,0	21,0	0,37	4300	1,57	8600	28,0	369 / 408	400	2600	22,8	15,8	6,4
									460	3000	20,5	13,6	6,7
155G8-135S with fan	46,0	30,0	0,37	4300	1,57	8600	31,0	432 / 471	400	2600	38,5	26,4	10,1
									460	3000	37,2	26,1	11,3
190J8-150S	91,0	52,0	0,18	1900	1,74	21000	50,0	615	400	2400	70,0	40,0	17,6
with fan									460	2800	58,0	34,0	17,0

Tolerance: ±10%.

The general motor values have been determined in accordance with:
the British standard BS4999 or the international Standard IEC34 • Overtemperature: 110K
Assumed is that the air can circulate freely to all sides (mounting distance approx. 30% of the edge length)

When the rated data was determined, the following tolerances were also taken into consideration:

- 10% mains power voltage.
- 17V voltage drop in the final stage.
- 10% voltage control reserve for controlled operation under the rated conditions.

The following were not taken into consideration:

- Tolerance (±10%) of torque constants, motor inductivity and motor resistance.
- Temperature dependency on torque constants and motor resistance.

[5] To determine torque: torque = 0,71 * entire torque constant * transverse current (see User Guide COMPAX)
[6] See next page.

Dimensional drawings

HJ96C6-44S

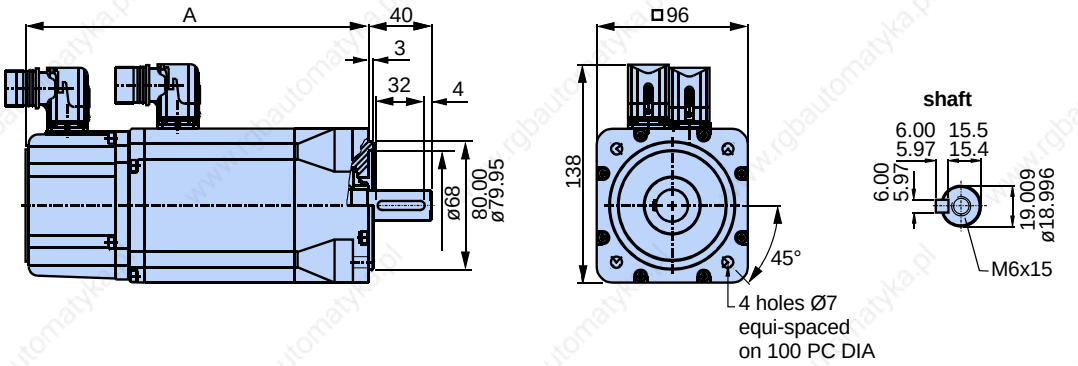

HJ116C6-64S / HJ116E6-88S

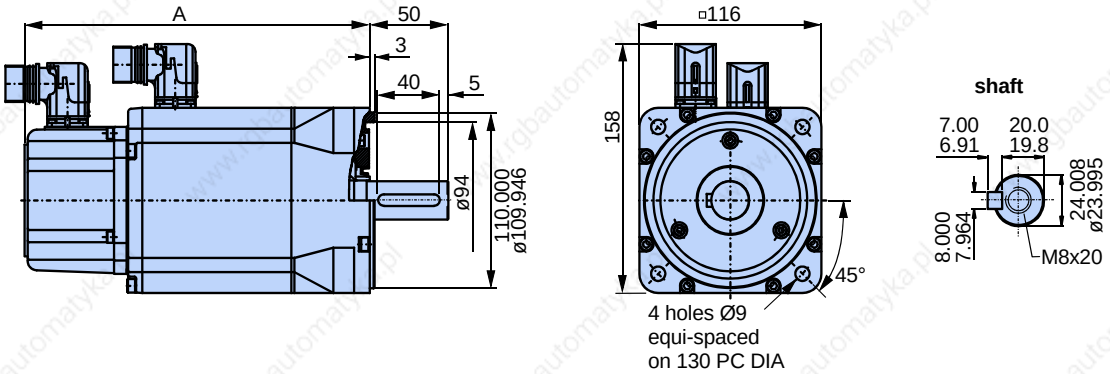

HJ155A8-88S / HJ155E8-130S / HJ155G8-135S

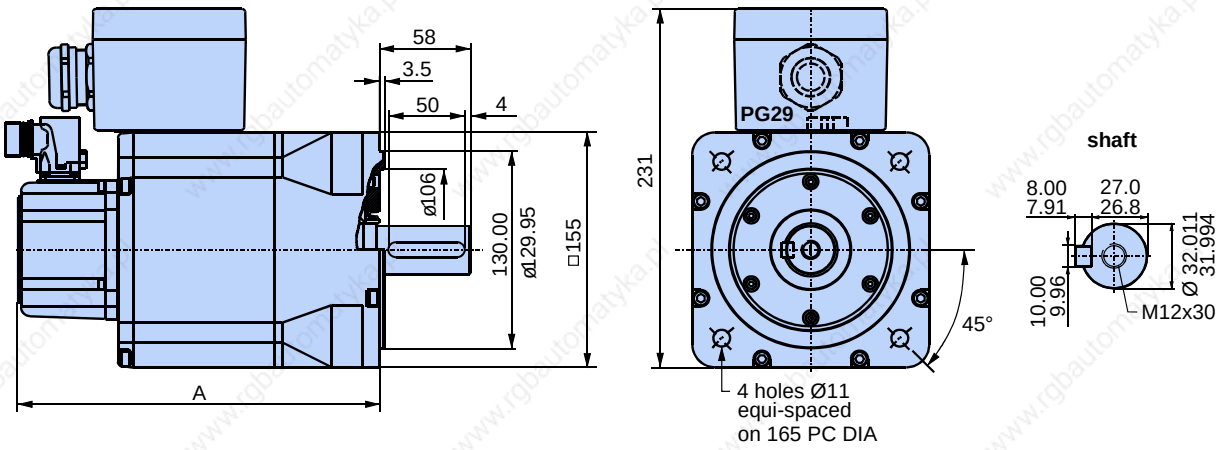

You can find the CAD-files of the dimensional drawings in the "dxf and "mi" format on our homepage.

HJ155G8-135S with fan

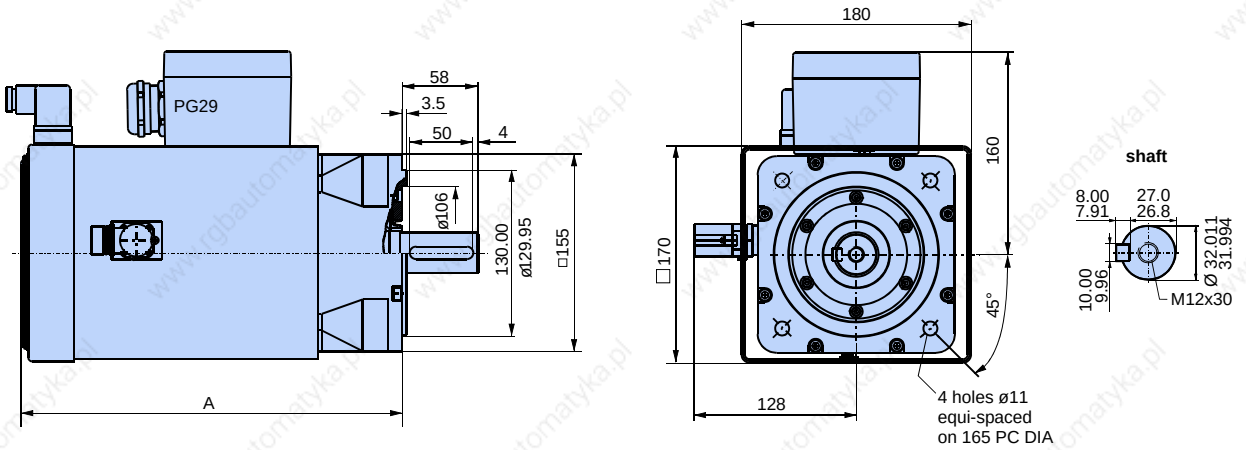

HJ190J8-150S with fan

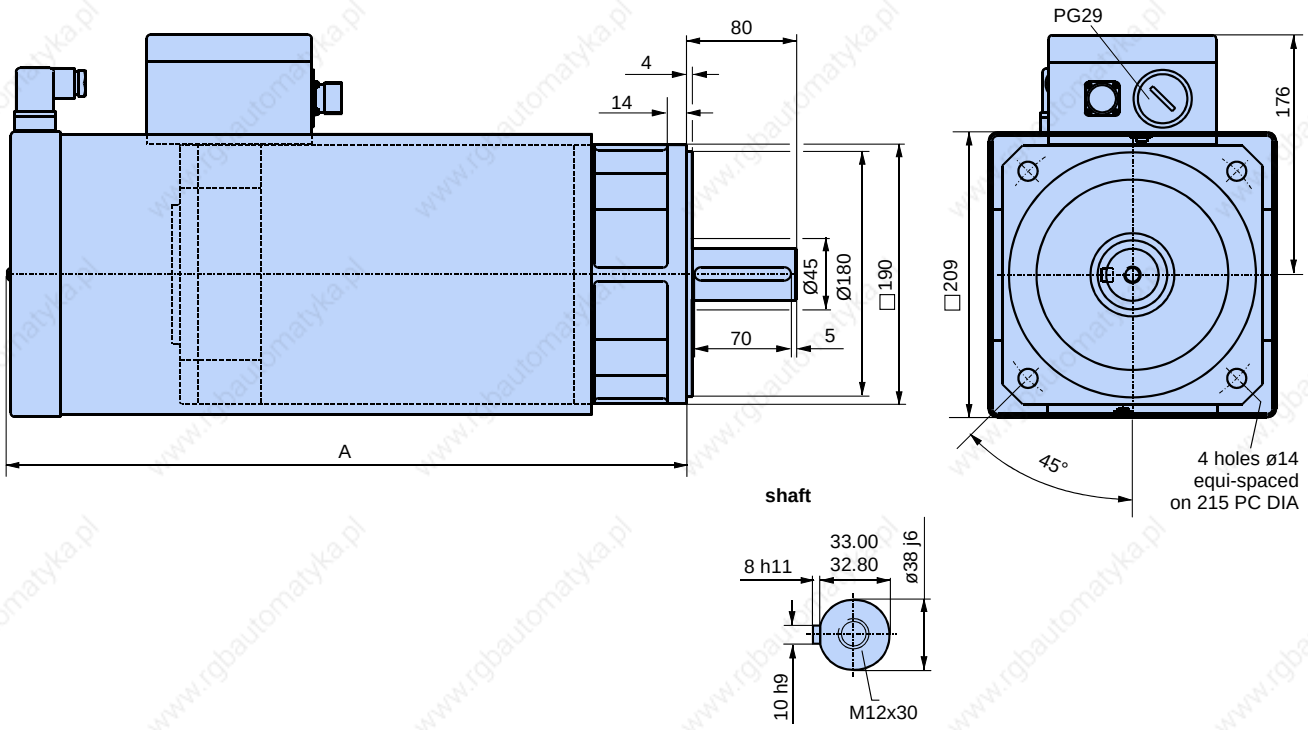

You can find the CAD-files of the dimensional drawings in the "dxf and "mi" format on our homepage.

Engine characteristics curves

HJ96C6-44S

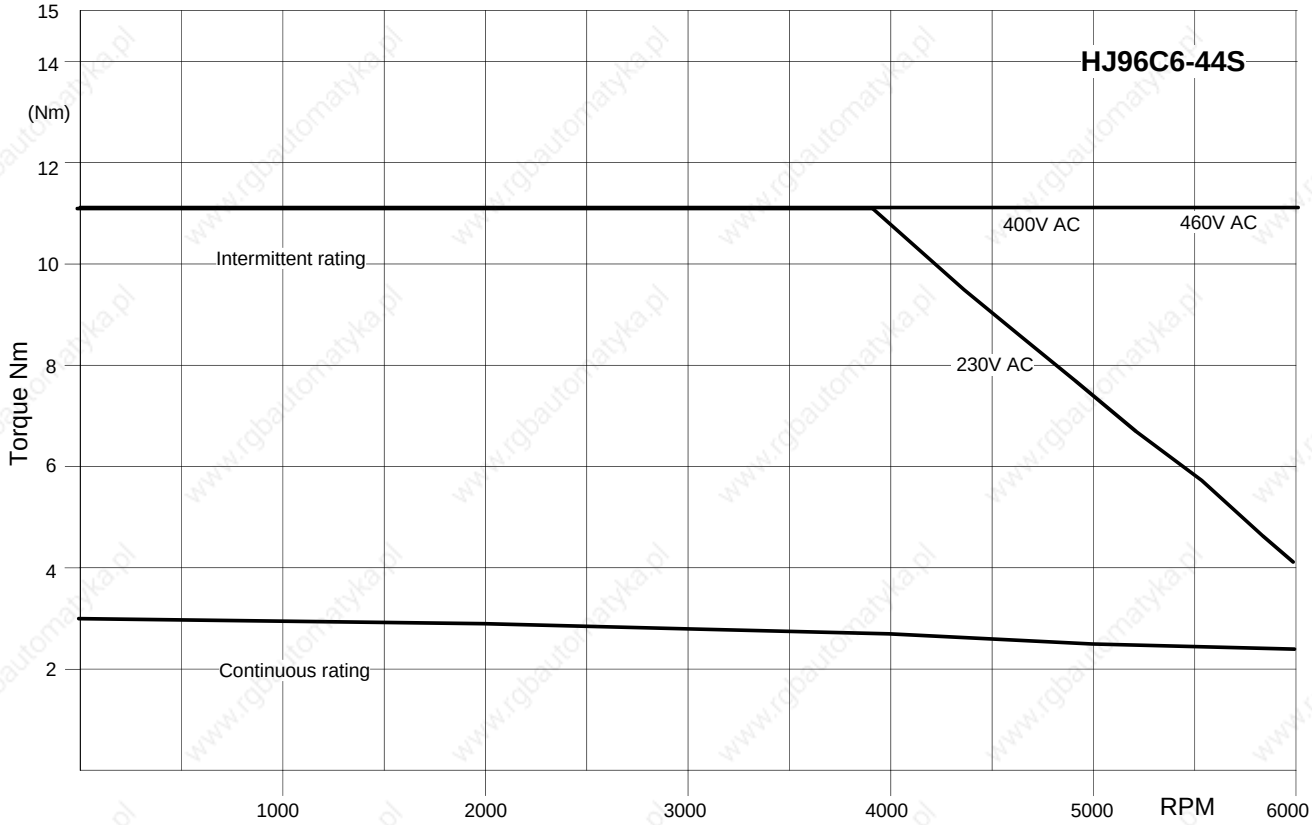

HJ116C6-64S

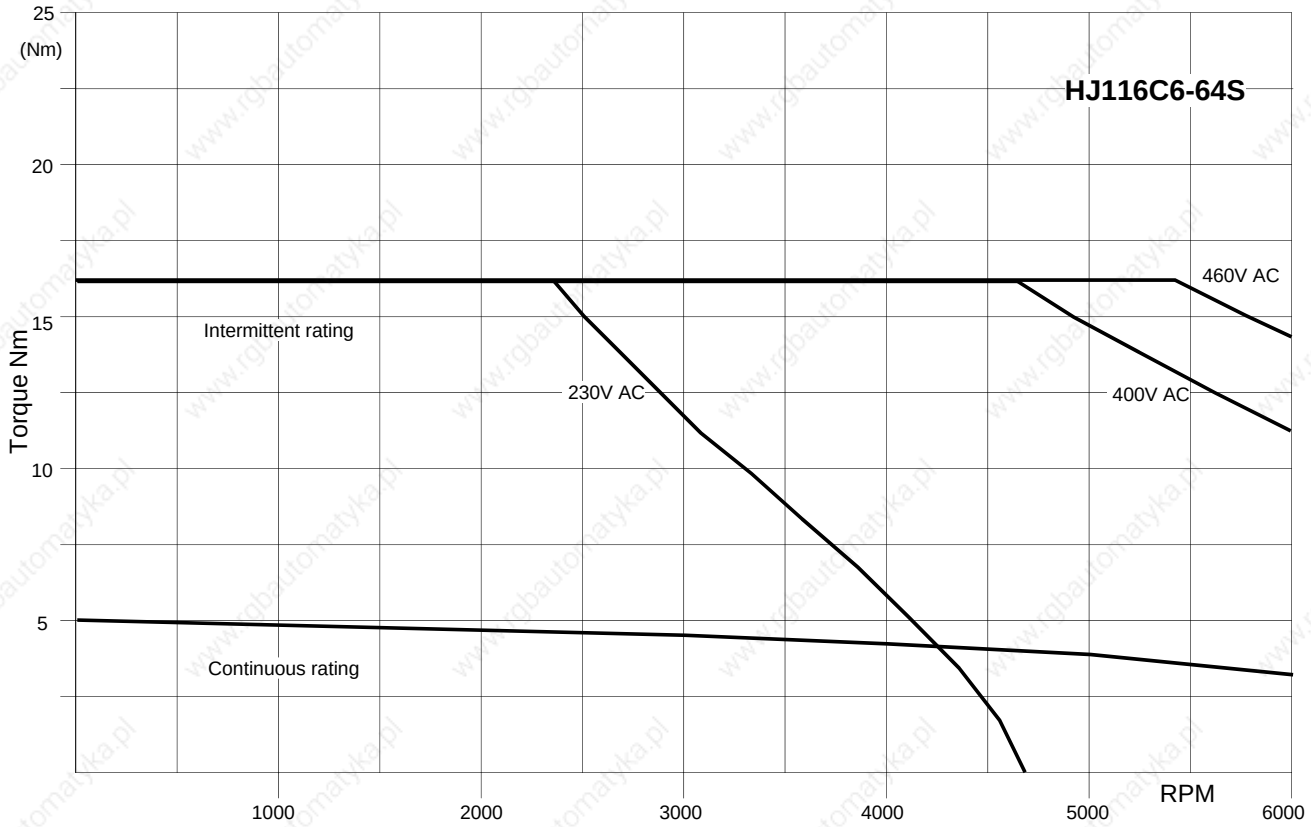

HJ116E6-88S

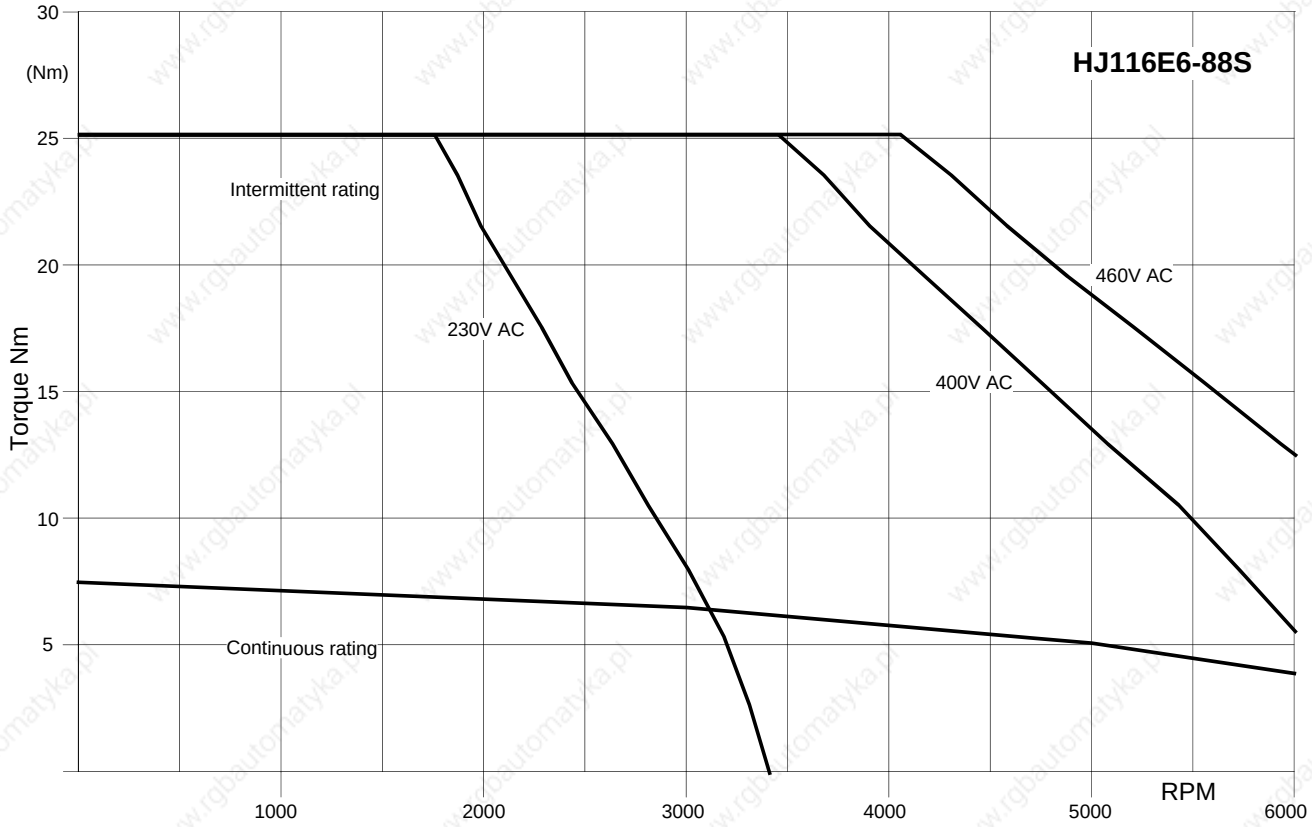

HJ155A8-88S

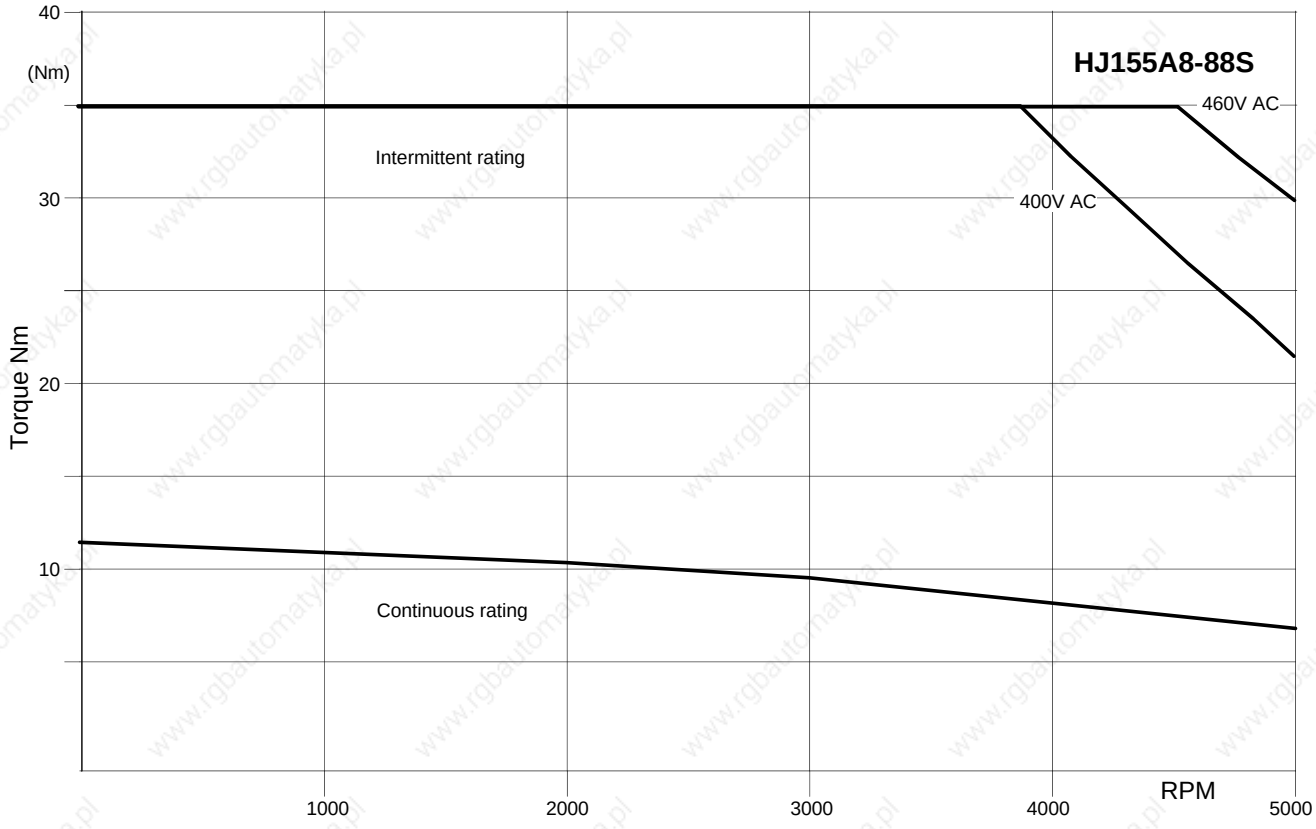

HJ155E8-130S

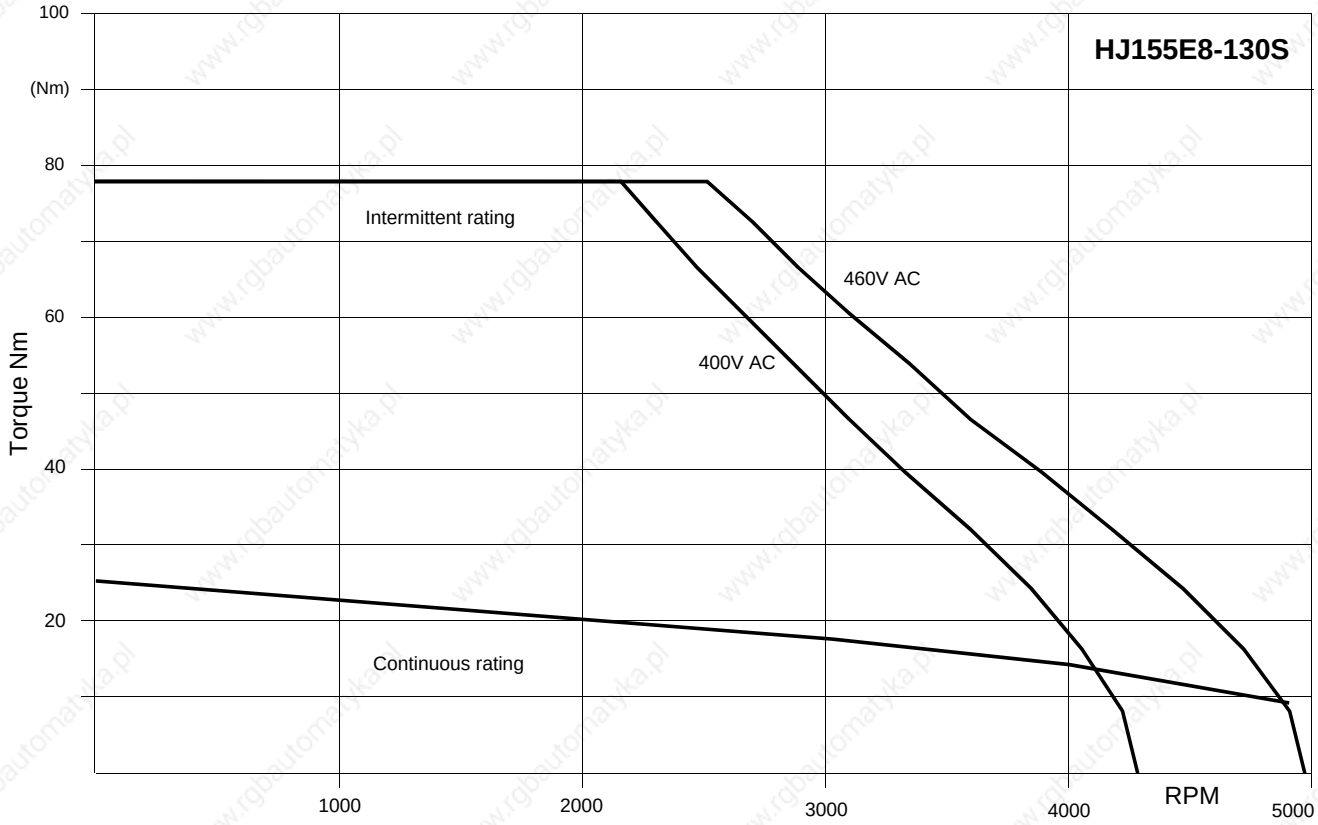

HJ155G8-135S

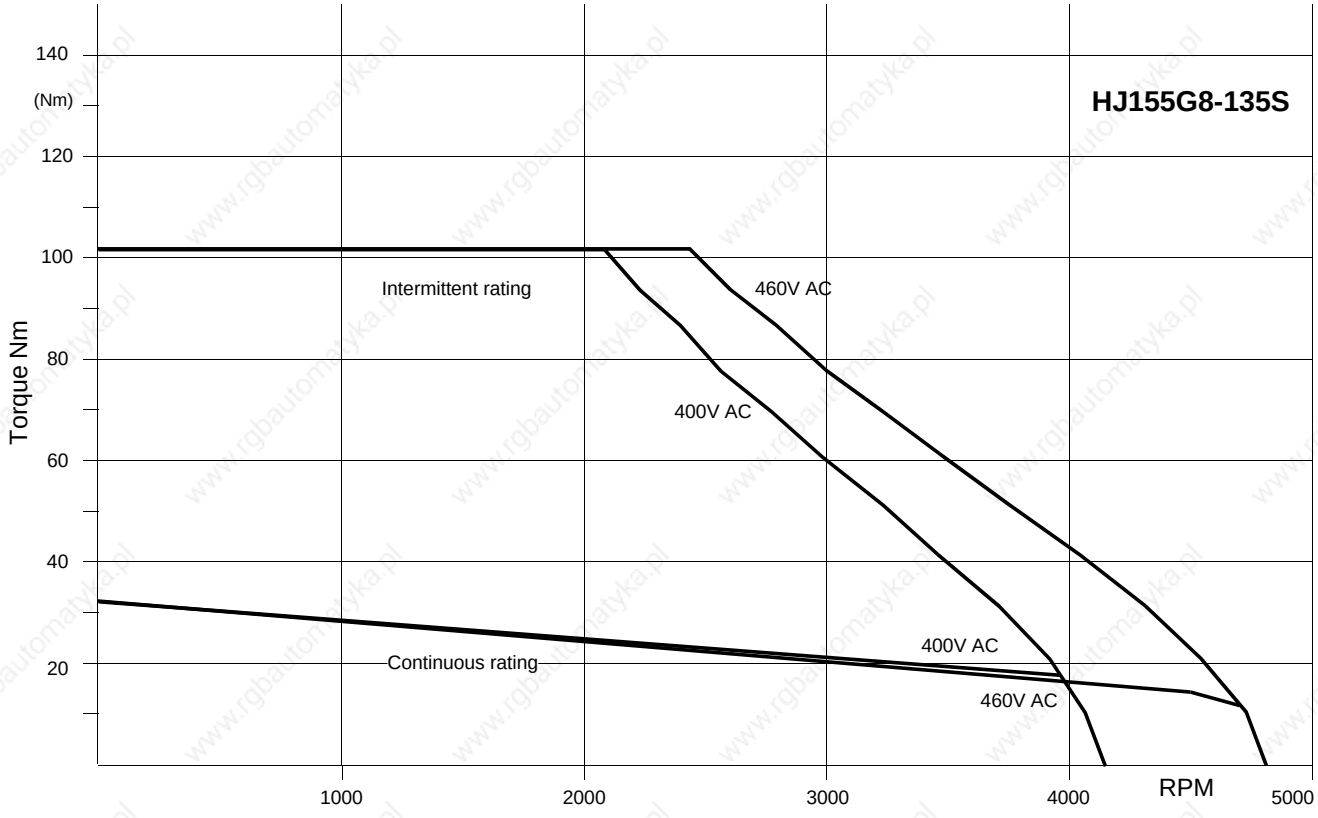

HJ155G8-135S with fan

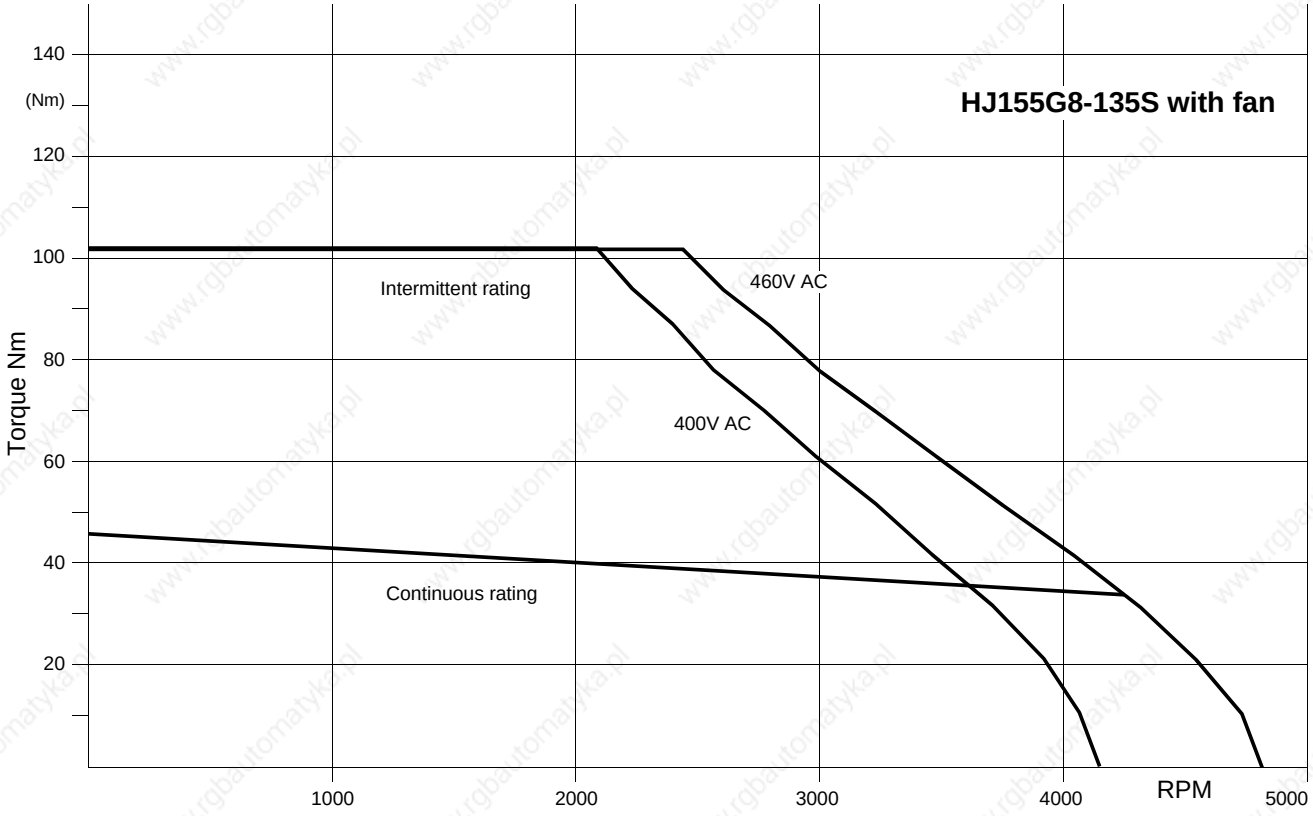

HJ190J8-150S with fan

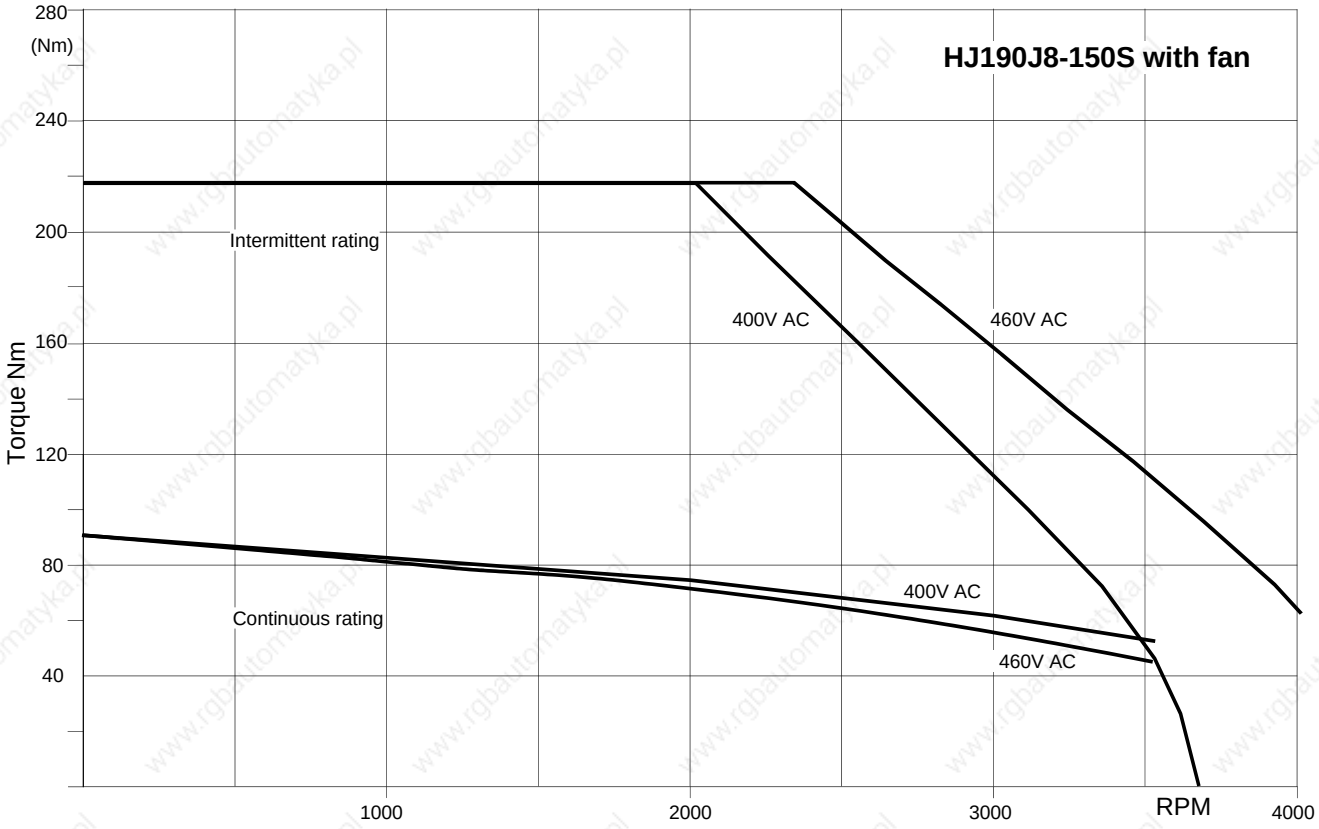

Highly dynamic synchronous servo motors HDY

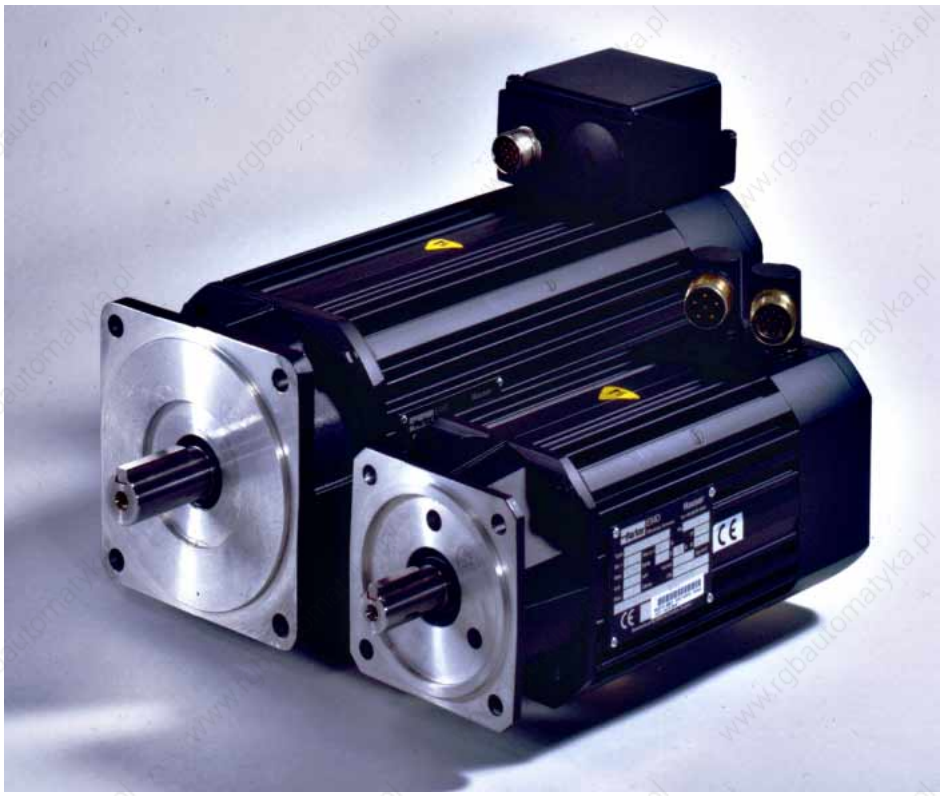

General characteristic data:

- Sinusoidal EMC.
- Painted mat black.
- Nitrile shaft seal.
- IP65 type of protection (shaft IP64).
- Insulation class F.
- Self-cooling. Max. ambient temperature: 40°C
- Any installation position.
- Standard flange: standard in acc. with DIN 42955; IEC72.
- Basic body: aluminium extruded moulding
- Flange: aluminium
- Connector sockets can be turned into almost any position (secured using a torque of 10 Nm ±2 Nm)
- Treble torque rating possible for up to 3s.
- Thermal switch (normally closed): switches at a coil temperature of 150°C ±10°.

Version:

- With spline
- Spur thread

  HDY55: M3x10
  HDY70: M4x12
  HDY92: M5x10
  HDY115: M6x15
  HDY142: M8x15
- Integrated resolver.

Area of application

Highly dynamic applications in:

- packaging machines,
- shelf transport plants,
- wood machining, etc.

Options

Stationary/parking brake

The motors can be fitted with a stationary/parking brake on request. The brake is fitted in the motor housing behind the A flange, the mechanical dimensions of the motor only change in HDY55 and HDY70. The brake is fed voltage by the engine cable.

Technical data for 24V DC holding brakes:

The values for the reinforced versions are in brackets.

Motor	Holding torque [Nm]	J [kgmm²]	Power [A]	Switch times [ms]	
				open	close
HDY 55	1,0	1	0.29	25	20
HDY 70	1,0 (2,0)	2 (4)	0.26 (0.35)	35	10
HDY 92	5,0 (10,0)	13 (17)	0.50	50	20
HDY 115	10,0 (13,5)	17 (17)	0.50	50	20
HDY 142	18,0 (40,0)	200 (200)	1.00	110	40

Attention: the stationary/parking brake does not permit active braking.

Sensor system

A resolver is fitted as standard in the motors.
The motors can optionally be supplied with the following sensors:

- SinCos© singleturn encoder or
- SinCos© multiturn absolute value sensor

Caution! It's only with SinCos model SCS60 and SCM60
Do not release rear motor cover. The SinCos© is fixed by the rear motor cover.
Danger! If this is released, the motor will behave in an uncontrollable manner.

By using SinCos©, the rated torque must be reduced about 10% for a correct dimensioning.

Altered dimensions with SinCos©

for HDY 55 (width and length; refer to dimensional diagram) and HDY 70 (only length):

Motor	Length A with SinCos© [mm]	
	Without brake	With brake
HDY55C4-44S	172	206
HDY70C4-44S	191	218
HDY70E4-44S	218	245

Motor overview of HDY – motors

Motor type	Continual stall torque	Continual stall current	Resistance	Inductance	Entire torque constant[7]	Rotor inertia	Weight	Length[8] without / with brake	Power voltage ac	Rated speed	Rated torque	Rated current	Rated power
	M_0	I_0	Ω	µH	K_T	J	m	A	U	N_{rated}	M_{rated}	I_{rated}	P_{rated}
HDY ...	Nm	A			Nm/A	kgmm²	kg	mm	V ac	R.P.M	Nm	A_{eff}	kW
55C4-32S	0,4	1,1	19,0	17000	0,375	24	1,4	140 / 176	230	5000	0,35	1,04	0,18
									400	5000	0,35	1,04	0,18
70C4-44S	1,2	2,3	4,7	12100	0,51	60	2,4	158 / 185	230	4400	1,15	2,30	0,53
									400	5000	1,10	2,30	0,58
70E4-44S	1,8	3,5	2,6	7600	0,51	80	3,2	185 / 212	230	4400	1,75	3,40	0,81
									400	5000	1,70	2,30	0,89
92C4-44S	1,5	2,9	4,6	20000	0,51	85	4,3	230	230	4400	1,20	2,40	0,55
									400	5000	1,16	2,35	0,61
92E4-44S	2,2	4,3	2,8	14000	0,51	118	5,2	250	230	4400	1,85	3,70	0,85
									400	5000	1,80	3,60	0,94
115A6-64S	3,7	4,9	2,7	15000	0,75	240	6,6	235	230	2800	3,40	4,30	1,00
									400	5000	3,10	4,00	1,60
									460	5000	3,10	4,00	1,60
115A6-88S	3,7	3,6	5,5	28000	1,02	240	6,6	235	230	2000	3,50	3,20	0,73
									400	3800	3,20	3,00	1,27
									460	4400	3,20	3,00	1,47
115C6-88S	6,8	6,6	1,7	12600	1,02	460	9,0	275	230	2000	6,00	5,80	1,25
									400	3800	5,20	5,10	2,07
									460	4400	4,90	4,90	2,26
115E6-88S	9,8	9,5	1,01	8100	1,02	680	11,4	315	400	3800	7,5	7,3	3,00
									460	4400	7,0	6,9	3,23
115G6-88S	13,0	12,6	0,63	6000	1,02	900	13,8	355	400	3800	10,0	9,4	4,00
									460	4400	9,3	9,3	4,29
142C6-88S	11,3	11,0	0,76	8900	1,02	1150	14,0	295	400	3800	8,6	8,5	3,42
									460	4400	8,3	8,3	3,82
142G6-88S	21,0	20,0	0,29	4000	1,02	2200	21,0	375	400	3800	16,0	15,6	6,36
									460	4400	15,5	15,0	7,14

The general motor values have been determined in accordance with:
the British standard BS4999 or the international Standard IEC34 • Overtemperature: 110K • Tolerance: ±10%.
Assumed is that the air can circulate freely to all sides (mounting distance approx. 30% of the edge length)

When the rated data was determined, the following tolerances were also taken into consideration:

- 10% mains undervoltage.
- 17V voltage drop in the final stage.
- 10% voltage control reserve for controlled operation under rated conditions.

The following were not taken into consideration:

- Tolerance (±10%) of torque constant, motor inductivity and motor resistance.
- Temperature dependency of torque constants and motor resistance.

[7] To determine torque: torque = 0,71 * entire torque constant * transverse current (see User Guide COMPAX)
[8] Look at the dimensional drawings on the next page. HDY55 - and HDY70 - motors: the dimension A is only valid for motors with resolver. For motors with SinCos you will find the length A on page 1.

Dimensional drawings

HDY55C4-32S

with resolver

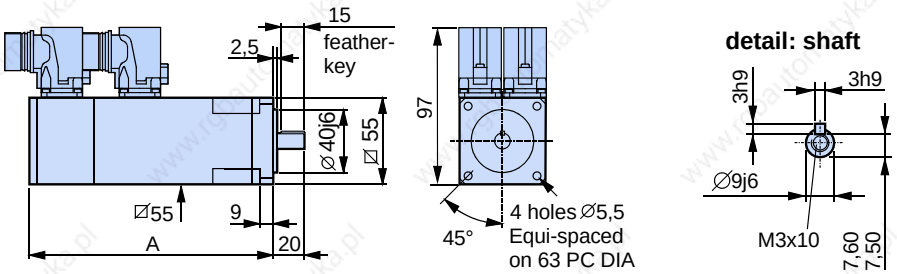

with SinCos©

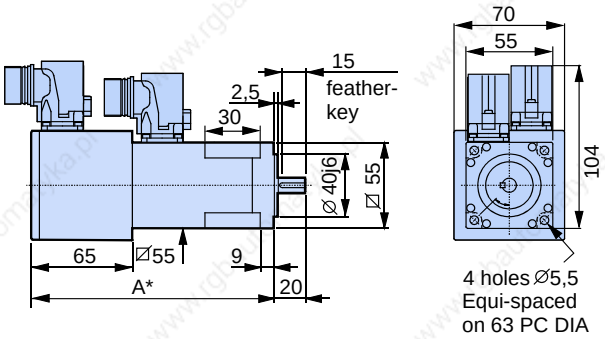

HDY70C4-44S / HDY70E4-44S

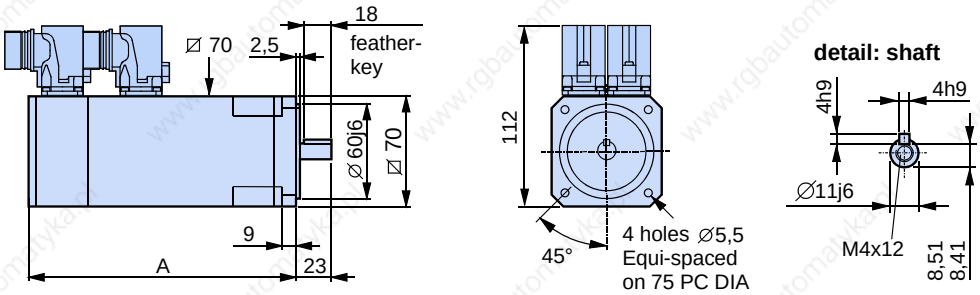

HDY92C4-44S / HDY92E4-44S

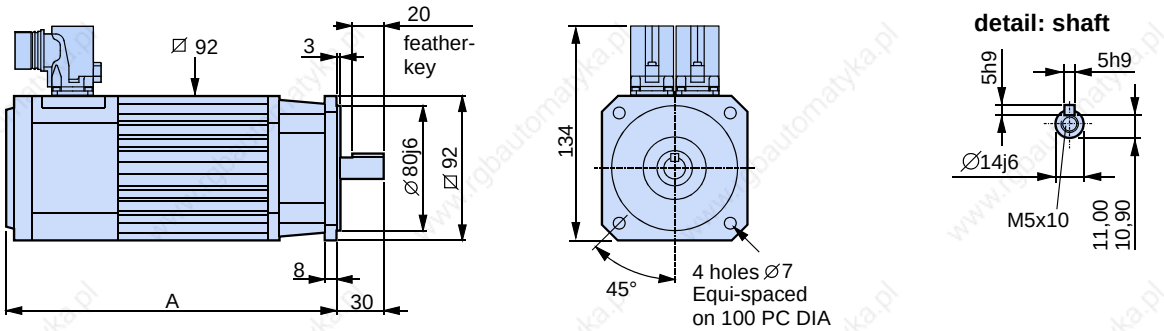

You can find the CAD-files of the dimensional drawings in the "dxf and "mi" format on our homepage.

HDY115A6-64S / HDY115A6-88S / HDY115C6-88S / HDY115E6-88S / HDY115G6-88S

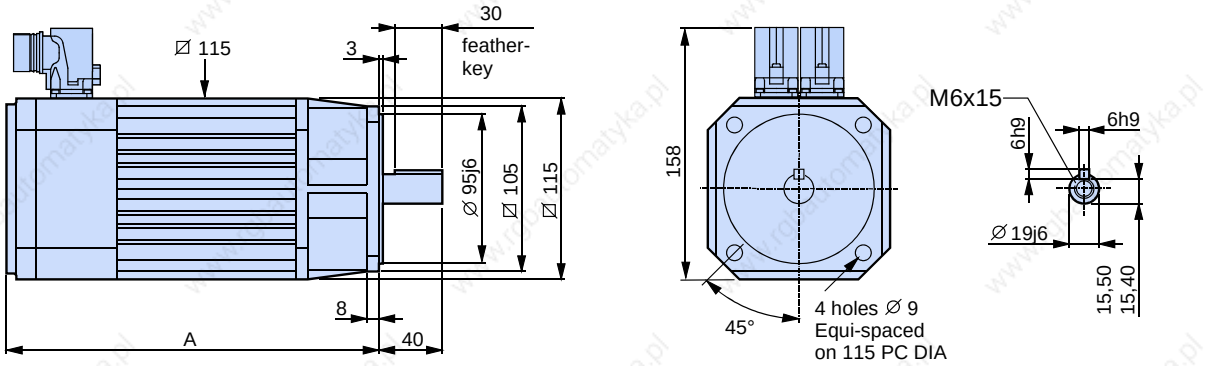

HDY142C6-88S / HDY142G6-88S

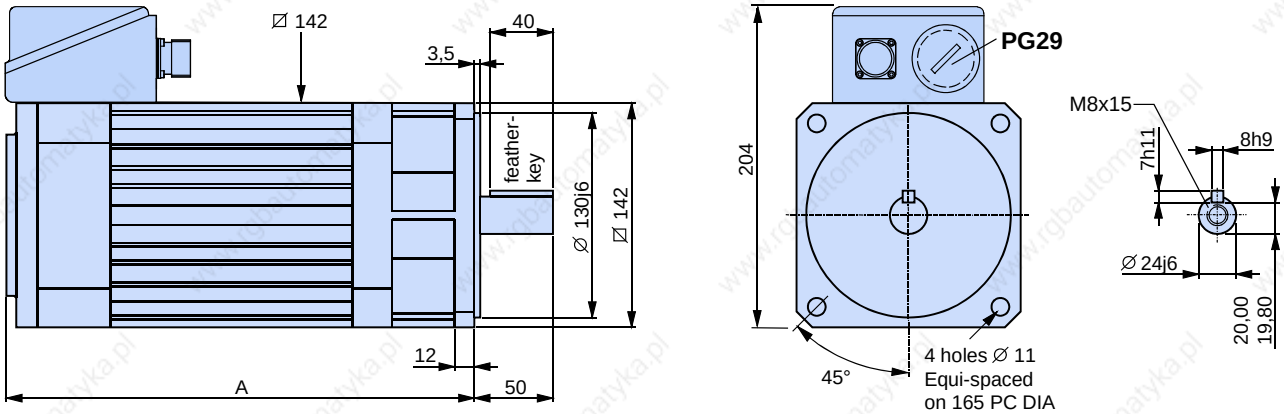

You can find the CAD-files of the dimensional drawings in the "dxf and "mi" format on our homepage.

Motor characteristics curves

HDY55C4-32S

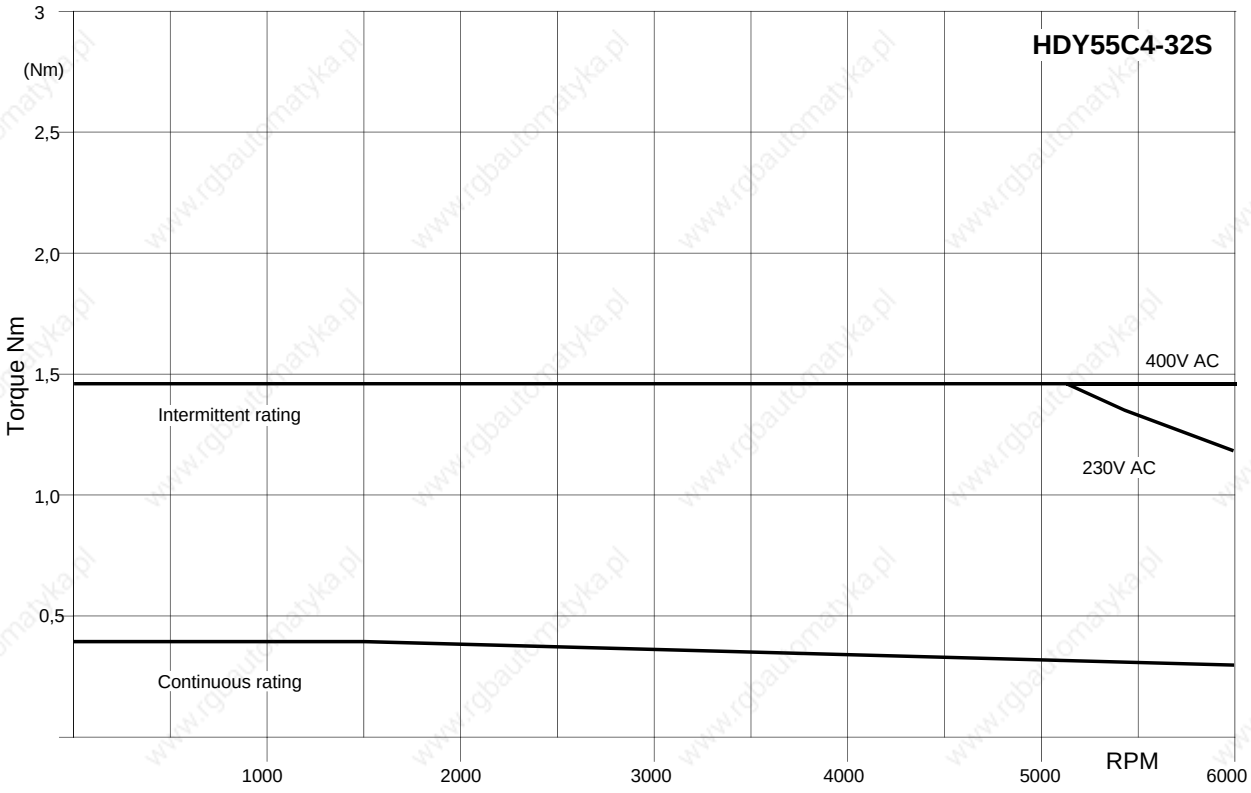

HDY70C4-44S

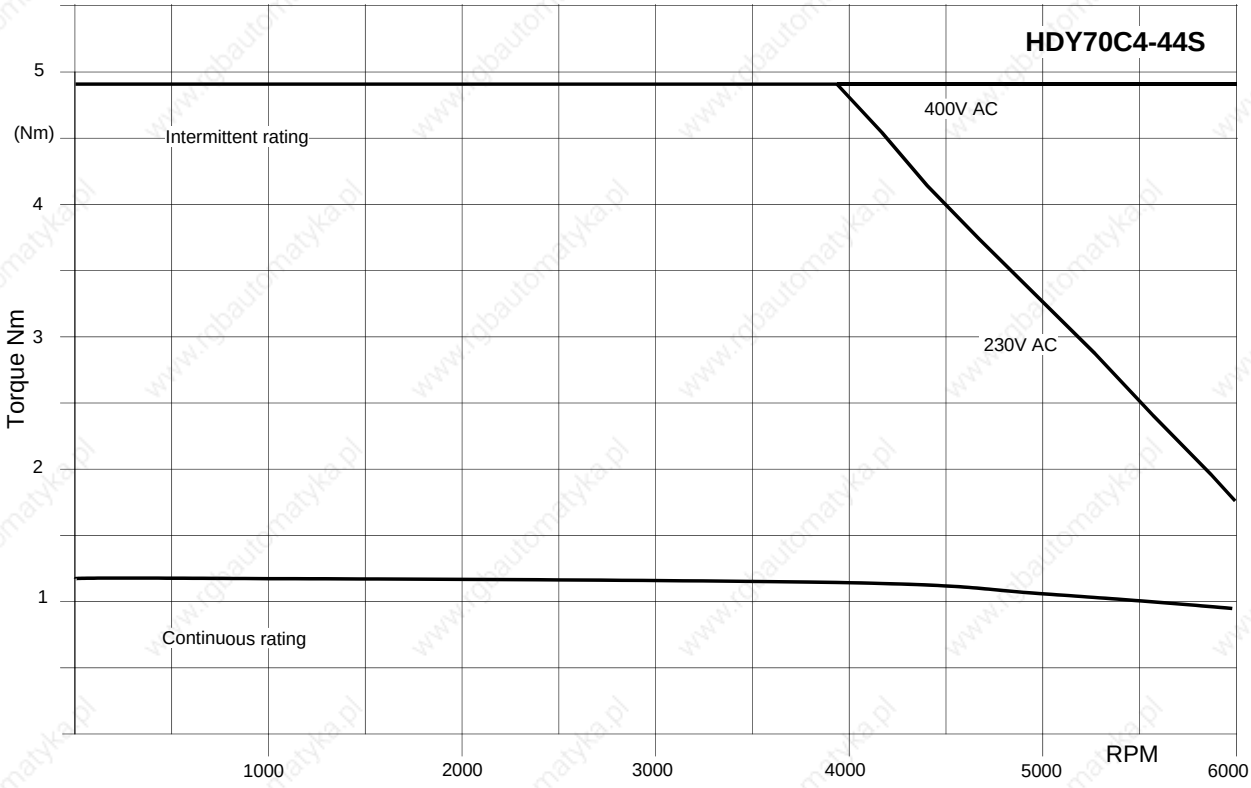

HDY70E4-44S

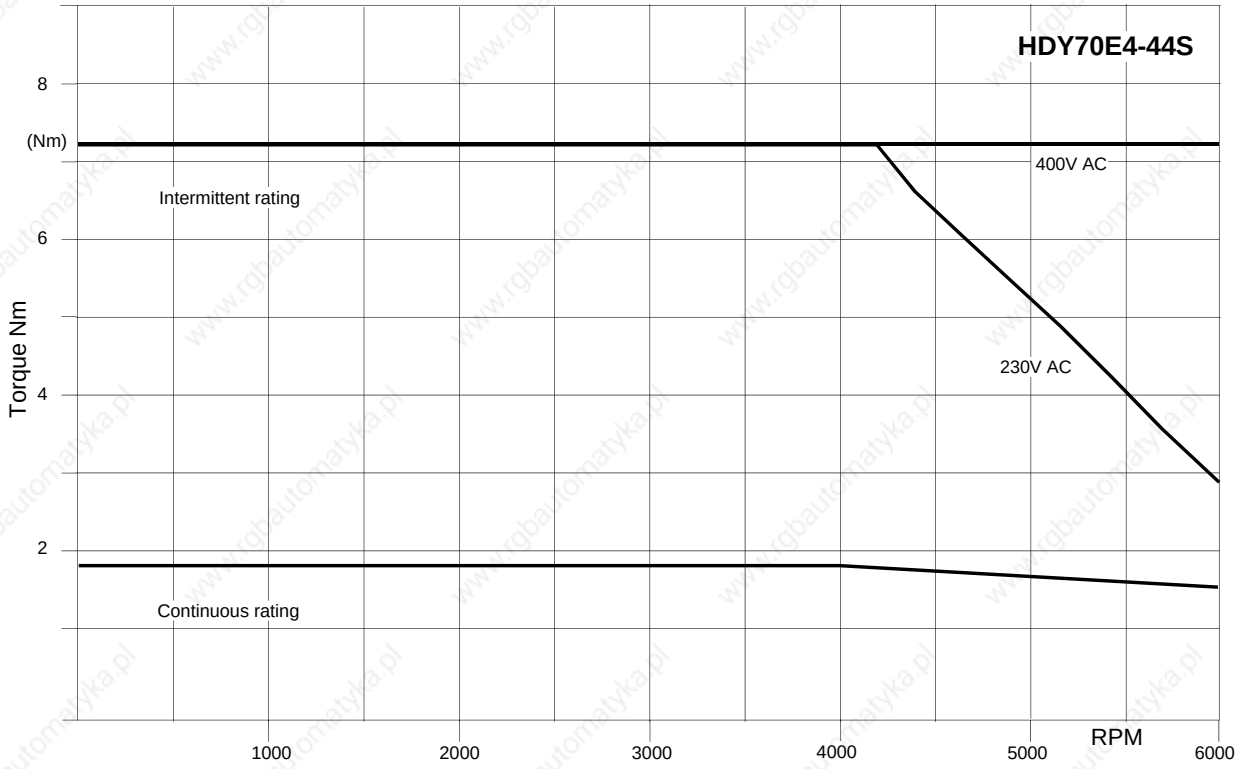

HDY92C4-44S

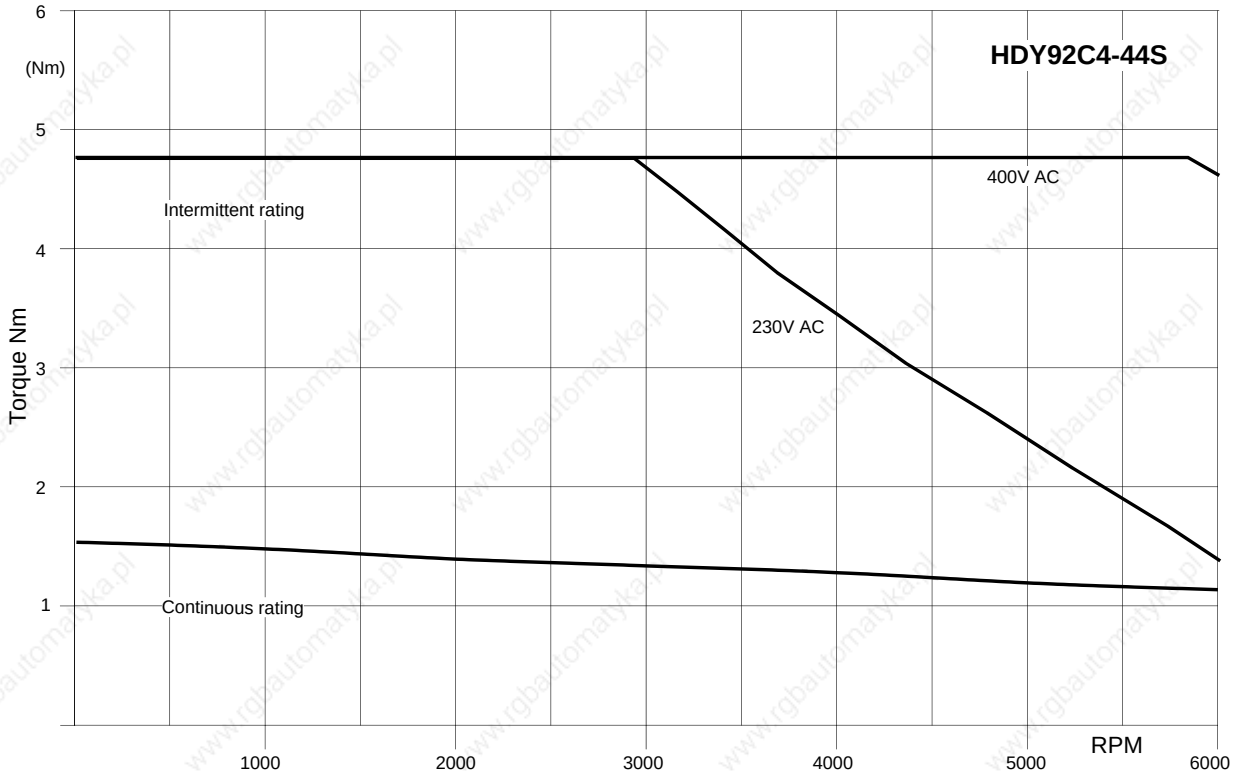

HDY92E4-44S

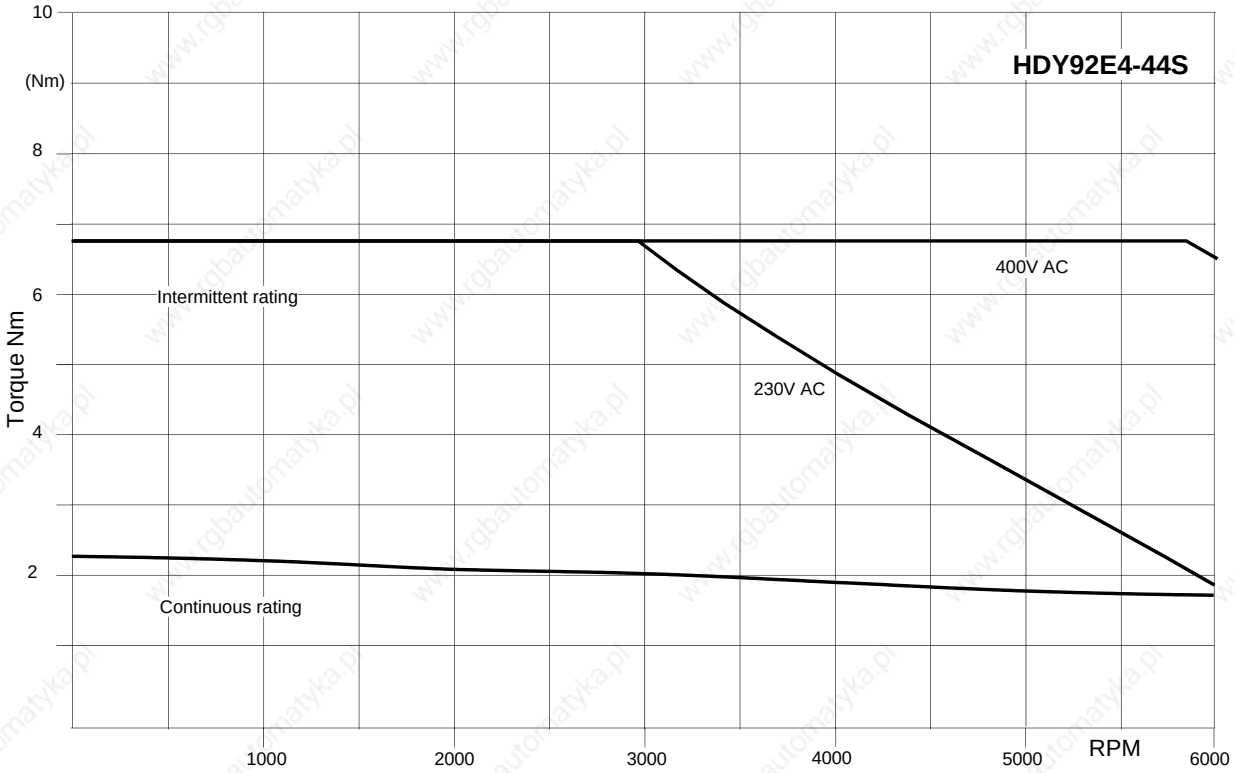

HDY115A6-64S

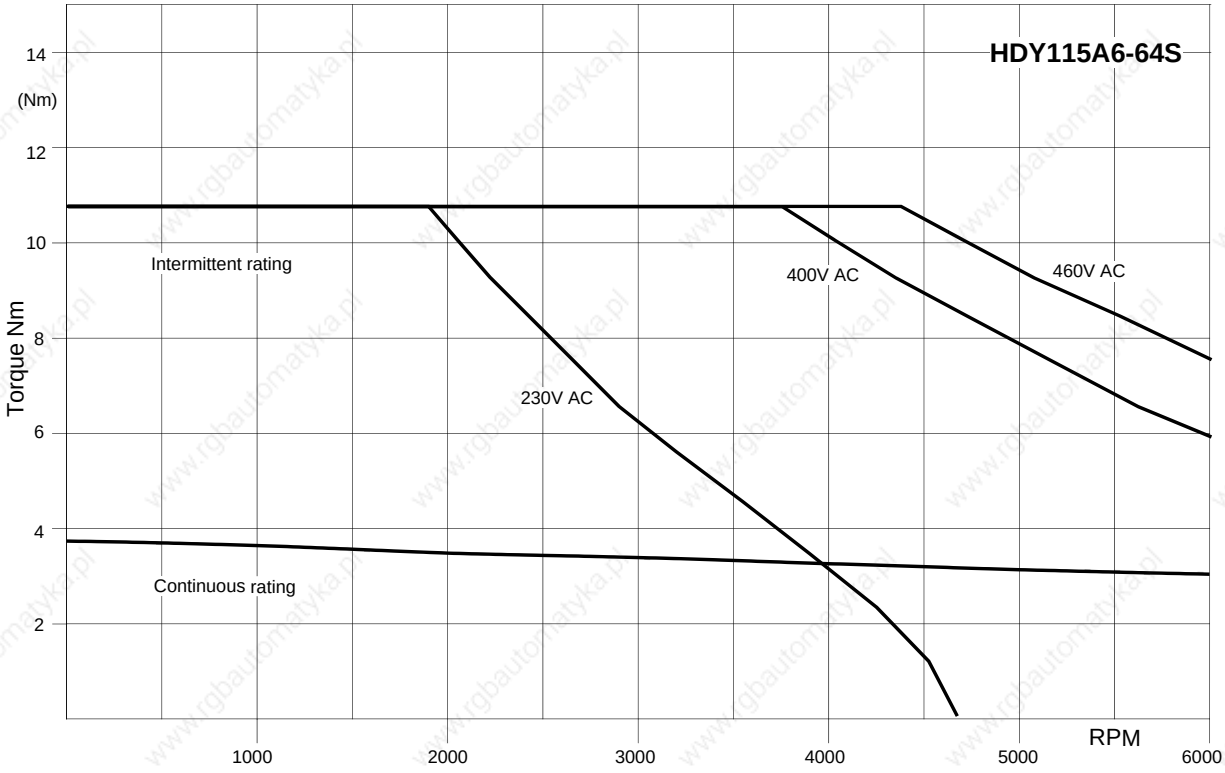

HDY115A6-88S

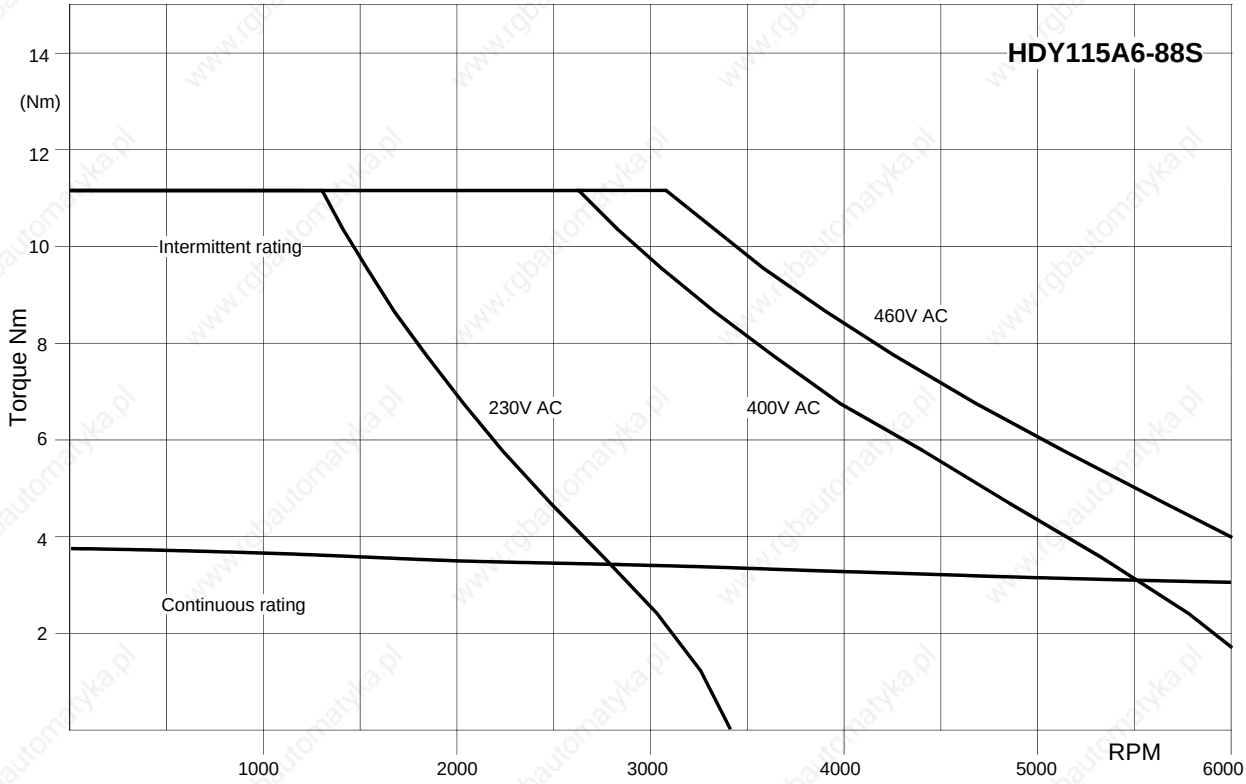

HDY115C6-88S

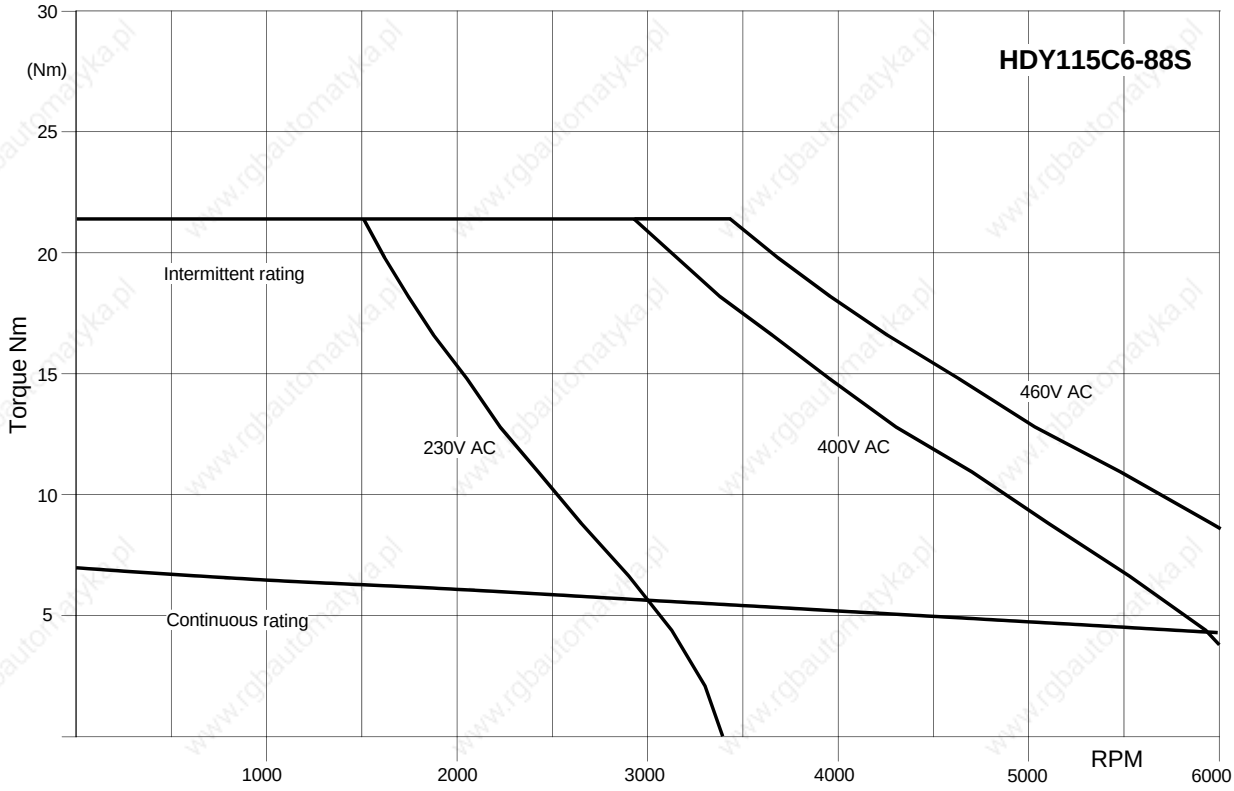

HDY115E6-88S

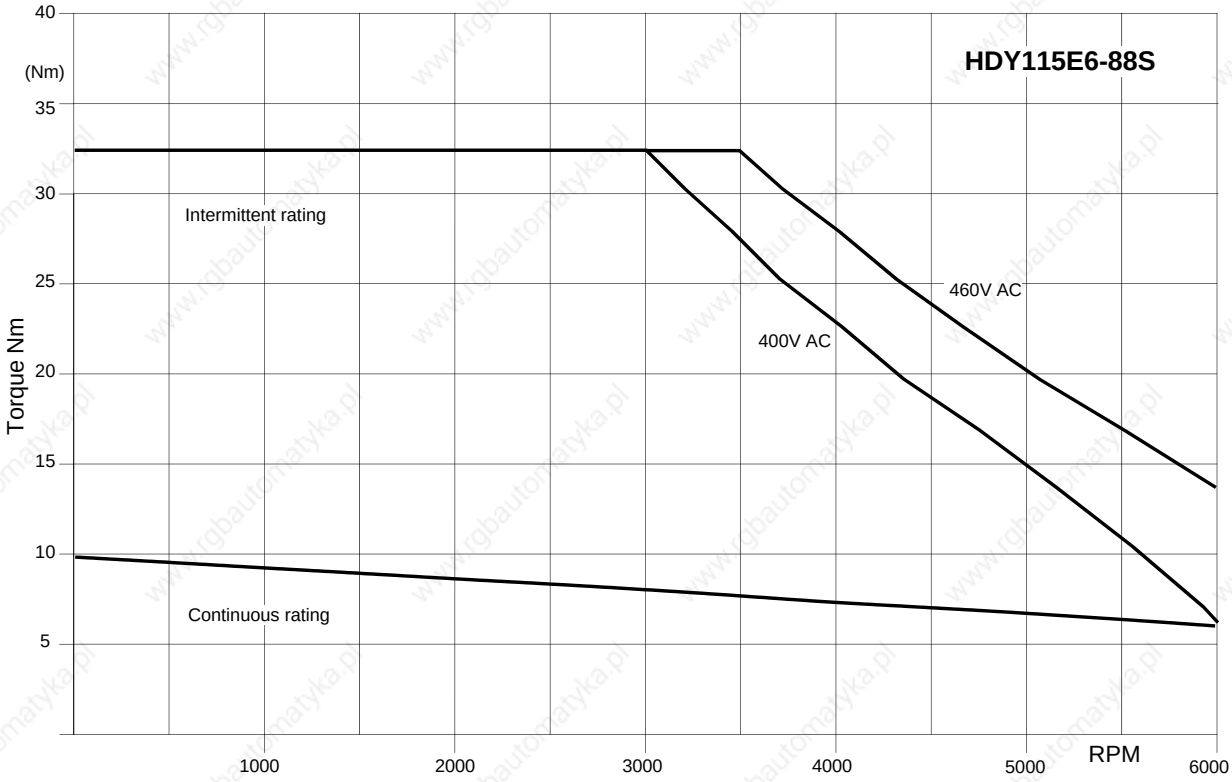

HDY115G6-88S

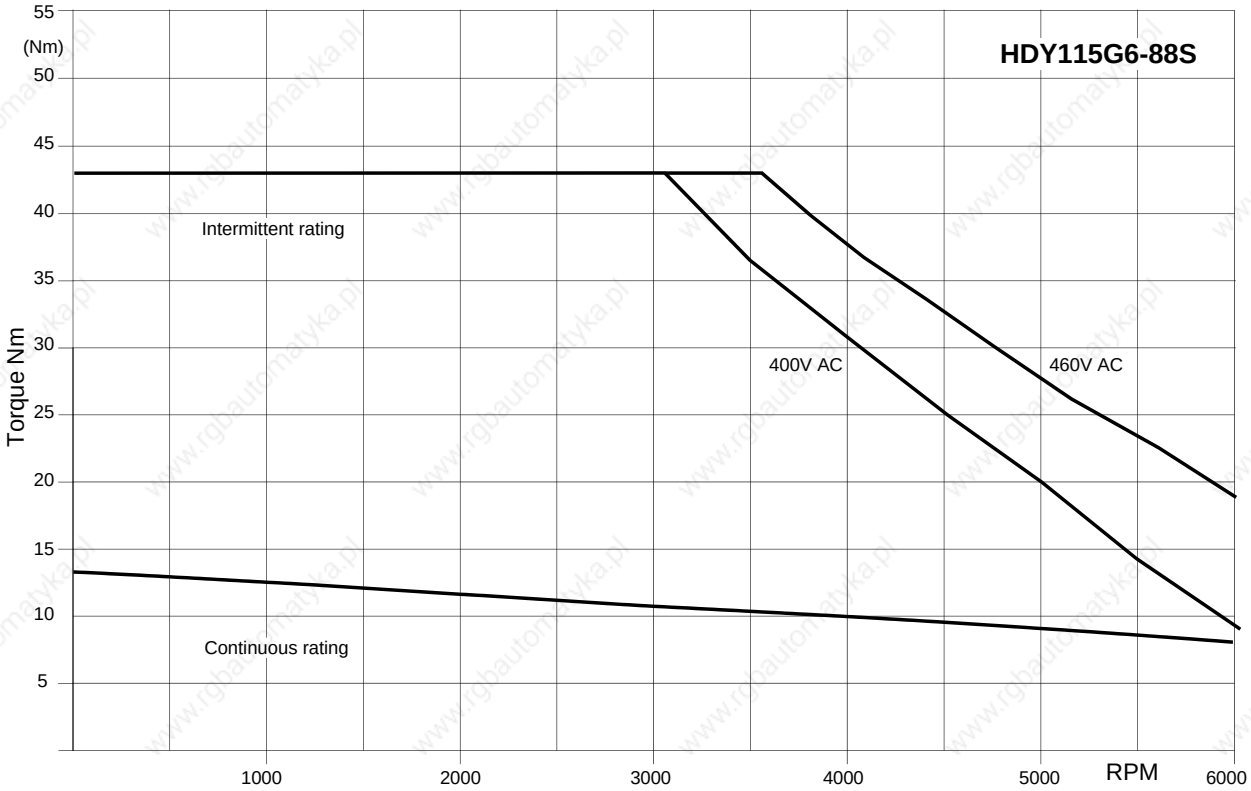

HDY142C6-88S

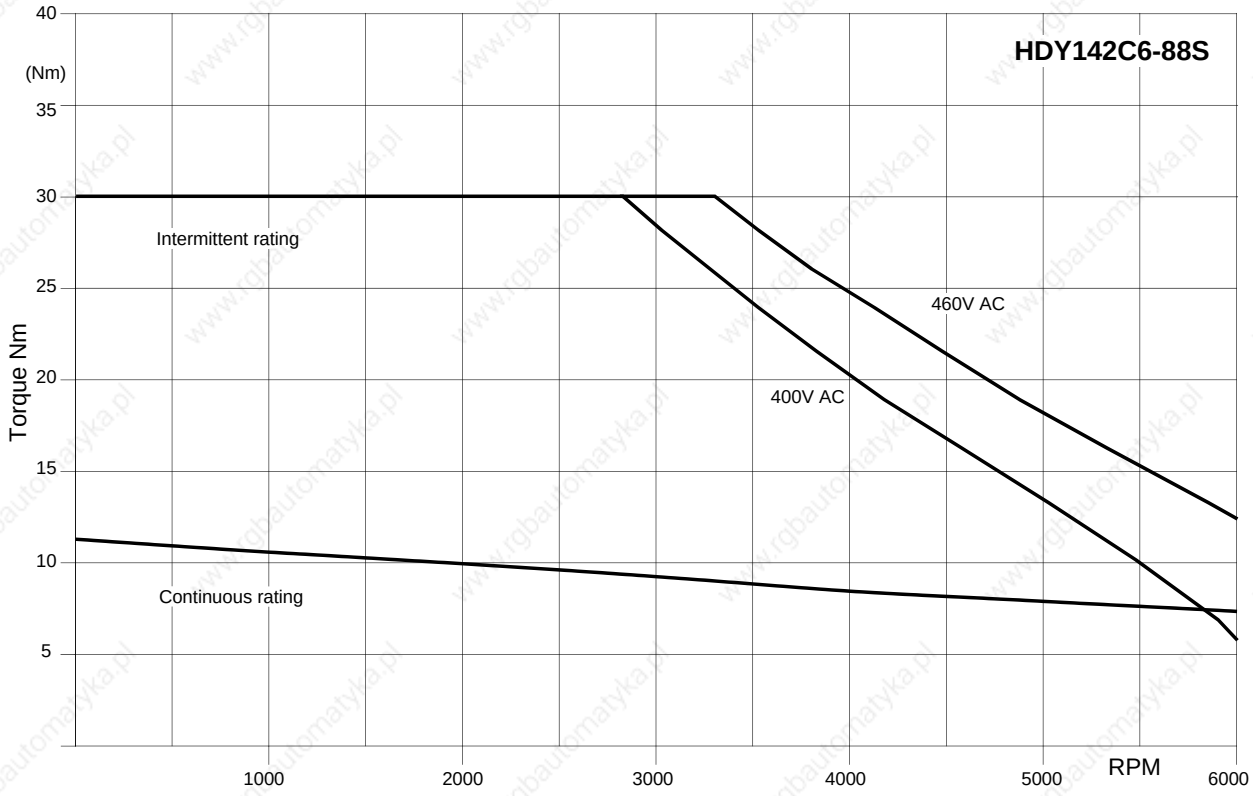

HDY142G6-88S

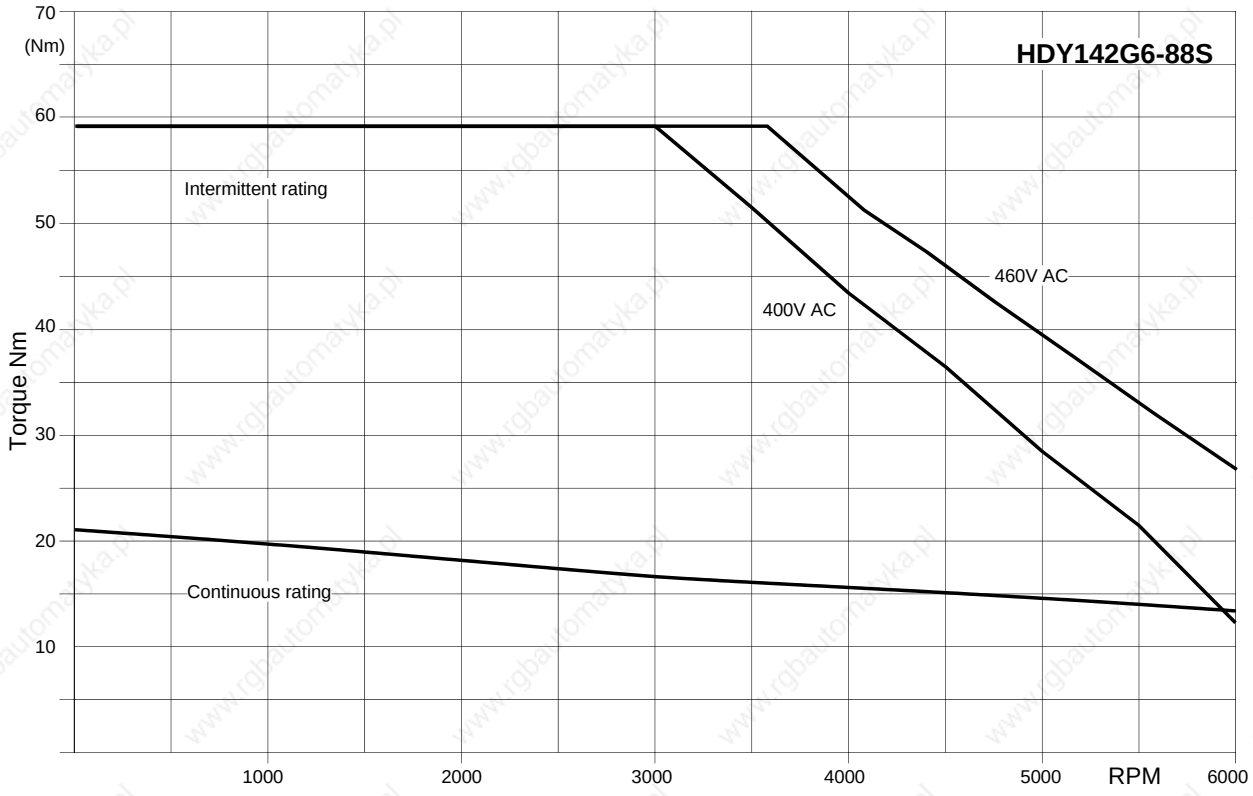

Connecting cable to motor

		Resolver cable	Sensor cable (SinCos©)	Motor cable				
				With connectors: HJ96, HJ116, HDY55, HDY70, HDY92, HDY115		With terminal boxes: HJ155, HJ190 HDY142		
				1.5mm² up to 13.8A	2.5mm² up to 18.9A	2.5mm² up to 18.9A	6mm² up to 32.3A	10mm² up to 47.3A
Standard cable	Cable sheathed	**REK32/..**	**GBK16/..**	**MOK42/..**	**MOK43/..**	**MOK21/..**	**MOK11/..**	**MOK46/..**
	Connector set	085-301312 800-030031	085-301317 800-030031	085-301306	085-301306	125-518162 125-216800	125-518211 125-217000	125-518200
	Cable	102-150200	102-150210	102-508896	102-508902	102-508902	102-150030	102-150040
	Cable data in mm [9]	8,0/80/120	7,5/38/113	10,7/107/107	13,7/137/137	13,7/137/137	16,5/124/124	22,5/168/168
High-flex cable	Cable sheathed	**REK33/..**	**GBK17/..**	**MOK44/..**	**MOK45/..**	**MOK14/..**	**MOK11/..**	**MOK46/..**
	Connector set	085-301312 800-030031	085-301317 800-030031	085-301306	085-301306	125-518162 125-216800	125-518211 125-217000	125-518200
	Cable	102-000030	-	102-000020	102-000010	102-000010	102-150030	102-150040
	Cable data in mm *	8,2/61,5/61,5	8,0/40/64	9,2/69/69	11/82,5/82,5	11/82,5/82,5	16,5/124/124	22,5/168/168

Resolver cable for HJ and HDY motors

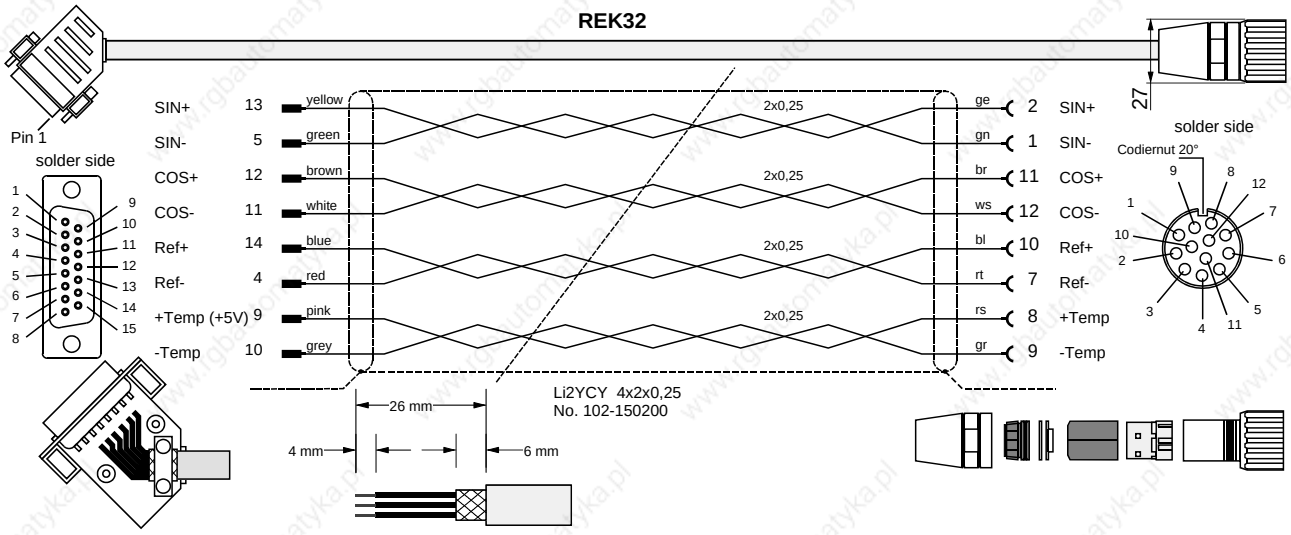

In HJ – motors, ensure that the thermal sensor has the correct terminal arrangement.

Version in high-flex: REK33 (same layout)

Packaging

Packaging of motor in accordance with connector manufacturer's specification

Packaging of device

- Strip 26mm sheathing off.
- Cut sheath down to 6 mm.
- Strip 4mm of insulation of ends and coat in tin.
- Place sheath over large area of housing (e.g. fold sheath over outer cover and fasten down by relieving tension).

*[9] Cable diameter / minimum bending radius (static) / minimum bending radius (dynamic)

Motor cable for HJ and HDY – motors

MOK42 (max. 13,8A)

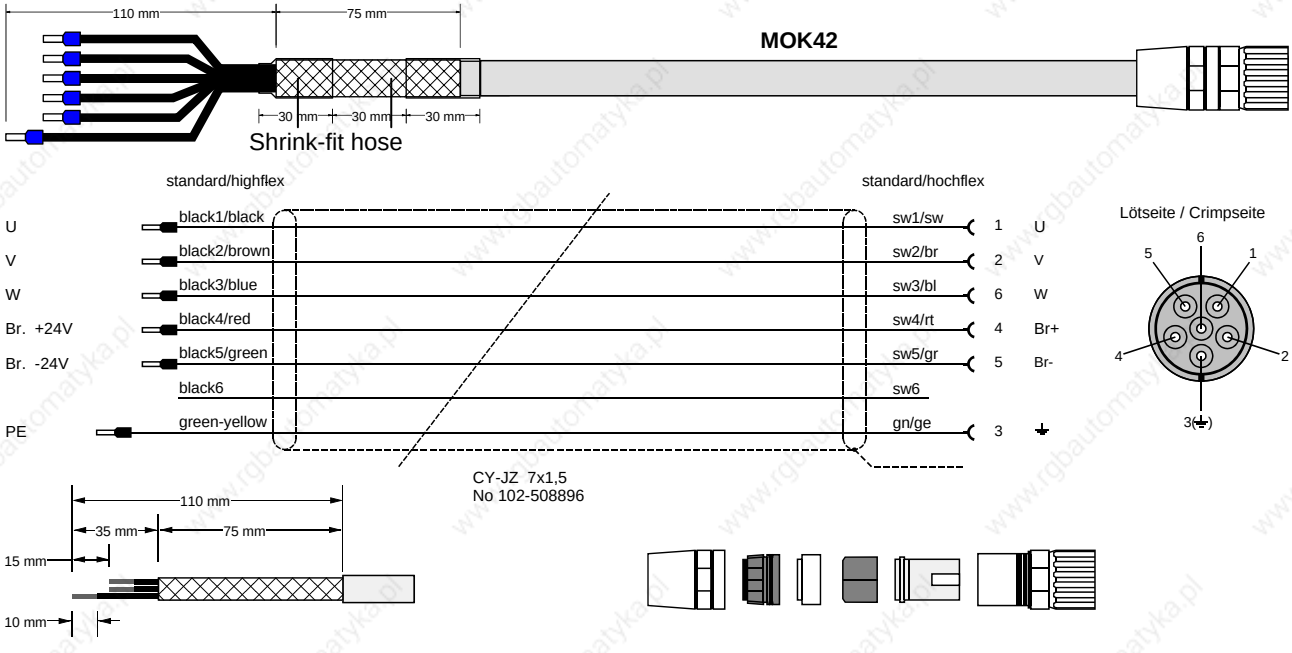

Version in high-flex: MOK44 (same layout)

MOK43/.. (max. 18.9A): HJ (version in high-flex: MOK45)

Layout corresponds to MOK42, however motor lines in 2.5 mm^2

Packaging

Packaging of motor in accordance with connector manufacturer's specification

Contacts for 1.5 mm^2 and 2.5 mm^2 are supplied with the connector set.

Packaging of device

Material:

- 6 x crimping sleeves.
- 6 cm shrink-fit hose.

Procedure:

- Strip 110 mm sheathing off cable.
- Cut down sheath to approx. 35 mm, loosen,
- fold back over outer cover (approx. 75 mm) and stick with insulating tape.
- Shorten sw1,sw2,sw3,sw4,sw5 approx. 15 mm ; (gn/ge approx. 15 mm longer); cut down sw6.
- Attach 2 x approx. 30 mm shrink-fit hose (sticky).
- Strip 10 mm of insulation of ends of wires and secure with crimping sleeve 1.5.

MOK21 (max. 18,9A)

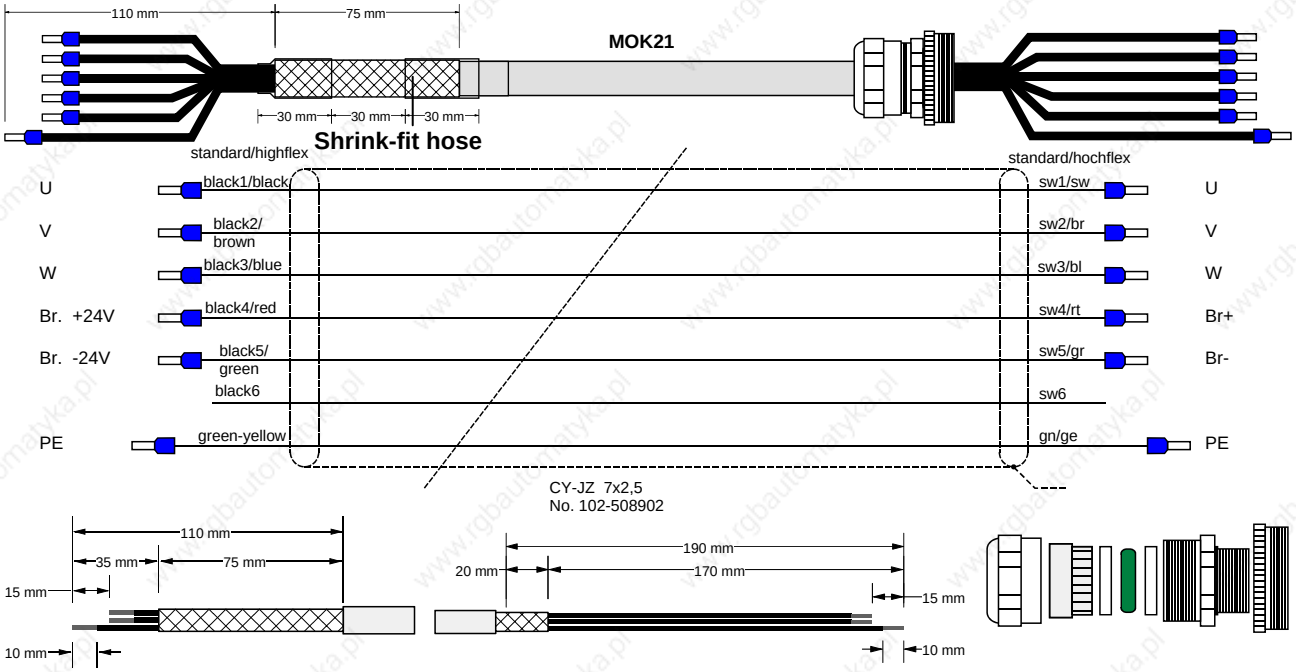

Version in high-flex: MOK14 (same layout)

MOK11 (max. 32.3A) in high-flex (same layout to MOK21, however in 6 mm^2)

MOK46 (max. 47.3A) in high-flex (same layout to MOK21, however in 10mm^2)

Packaging

Packaging of device

Material:

6 x crimping sleeves.
6 cm shrink-fit hose.

Procedure:

- Strip 110 mm sheathing off cable.
- Cut sheath down to approx. 35 mm, loosen,
- fold back over outer cover (approx. 75 mm) and stick with insulating tape.
- Shorten sw1,sw2,sw3,sw4,sw5 ca. 15 mm (gn/ge approx. 15 mm longer) cut down sw6.
- Attach 2 x approx. 30 mm shrink-fit hose (sticky).
- Strip 10 mm of insulation off ends of wires and secure with crimping sleeves 2.5.

Packaging of motor in accordance with manufacturer's specification

- Strip 190 mm sheathing of cable.
- Cut sheath down to approx. 170 mm, stick remaining 20 mm with insulating tape.
- Shorten sw1,sw2,sw3,sw4,sw5 by approx. 15 mm (gn/ge approx. 15 mm longer) cut down sw6.
- Strip 10 mm of insulation of ends of wires and secure with crimping sleeves 2.5.

SinCos© cable for HJ and HDY motors

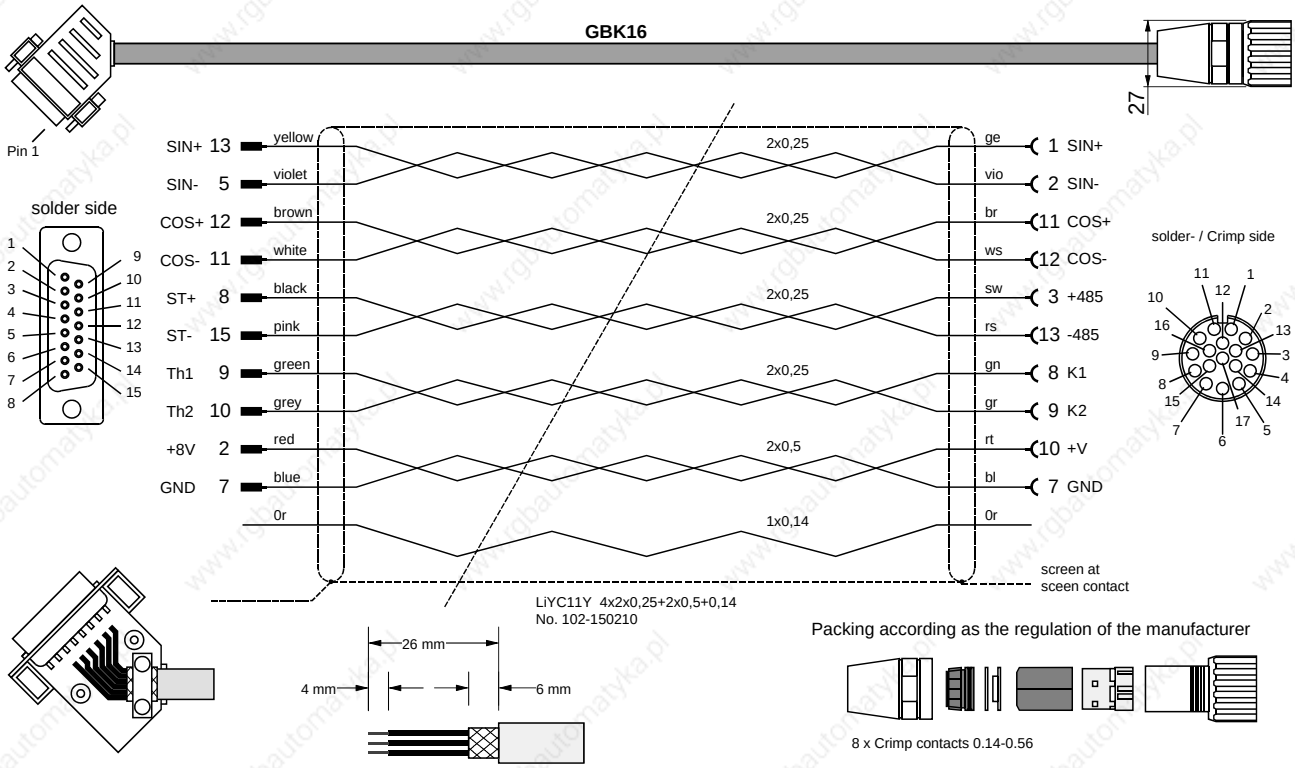

Version in high-flex: GBK17 (same layout)

Packaging

Packaging of motor in accordance with connector manufacturer's specification

Packaging of device

- Strip 26mm sheathing off.
- Cut sheath down to 6 mm.
- Strip 4mm of insulation of ends and coat in tin.
- Place sheath over large area of housing (e.g. fold sheath over outer cover and fasten down by relieving tension).

Order code motors

Motors														/											
HJ 96C6-44S		H	J	0	9	6	C	6	0	4	4	S													
HJ 116C6-64S		H	J	1	1	6	C	6	0	6	4	S													
HJ 116E6-88S		H	J	1	1	6	E	6	0	8	8	S													
HJ 155A8-88S		H	J	1	5	5	A	8	0	8	8	S													
HJ 155E8-130S		H	J	1	5	5	E	8	1	3	0	S	1												
HJ 155G8-135S		H	J	1	5	5	G	8	1	3	5	S	1												
HJ 155G8-135S with fan		H	J	1	5	5	G	8	1	3	5	S	1				...FN*...								
HJ 190J8-150S with fan		H	J	1	9	0	J	8	1	5	0	S					...FN*...								
HDY 55C4-32S	H	D	Y	0	5	5	C	4	0	3	2	S													
HDY 70C4-44S	H	D	Y	0	7	0	C	4	0	4	4	S													
HDY 70E4-44S	H	D	Y	0	7	0	E	4	0	4	4	S													
HDY 92C4-44S	H	D	Y	0	9	2	C	4	0	4	4	S	1												
HDY 92E4-44S	H	D	Y	0	9	2	E	4	0	4	4	S	1												
HDY 115A6-64S	H	D	Y	1	1	5	A	6	0	6	4	S	1												
HDY 115A6-88S	H	D	Y	1	1	5	A	6	0	8	8	S	1												
HDY 115C6-88S	H	D	Y	1	1	5	C	6	0	8	8	S	1												
HDY 115E6-88S	H	D	Y	1	1	5	E	6	0	8	8	S	1												
HDY 115G6-88S	H	D	Y	1	1	5	G	6	0	8	8	S	1												
HDY 142C6-88S	H	D	Y	1	4	2	C	6	0	8	8	S	1												
HDY 142G6-88S	H	D	Y	1	4	2	G	6	0	8	8	S	1												

Options (please seperate two options with "**/**")

with brake (24 Volt)						B	R
SinCos© Multiturn Encoder (absolute encoder)	S	R	M	5	0		
SinCos© Singleturn Encoder	S	R	S	5	0		

* FN: Code for fan

Order code cables

Motor cable, resolver cable, encoder cable

Motor cable for HJ96, HJ116, HDY55, HDY70, HDY92, HDY115							
Motor cable 1,5mm² standard (<13,8A)	M	O	K	4	2		
Motor cable 1,5mm² highly flexible (<13,8A)	M	O	K	4	4		
Motor cable 2,5mm² standard (<18,9A)	M	O	K	4	3		
Motor cable 2,5mm² highly flexible (<18,9A)	M	O	K	4	5		
Motor cable for HJ155, HJ190, HDY142							
Motor cable 2,5mm² standard (<18,9A)	M	O	K	2	1		
Motor cable 2,5mm² highly flexible (<18,9A)	M	O	K	1	4		
Motor cable for HJ155, HJ190, HDY142							
Motor cable 6mm² highly flexible (= standard) (<32,3A)	M	O	K	1	1		
Motor cable for HJ155, HJ190, HDY142							
Motor cable 10mm² highly flexible (= standard) (<47,3A)	M	O	K	4	6		
Resolver cable (identical for all motors)							
Resolver cable standard	R	E	K	3	2		
Resolver cable highly flexible	R	E	K	3	3		
Encoder cable (identical for all motors)							
Encoder cable (SInCos©) standard	G	B	K	1	6		
Encoder cable (SInCos©) highly flexible	G	B	K	1	7		
Length of ready-made cables see following table	**Example**: requested length 25m					0	9

Length [m]	1,0	2,5	5,0	7,5	10,0	12,5	15,0	20,0	25,0	30,0	35,0	40,0	45,0	50,0
Code	01	02	03	04	05	06	07	08	09	10	11	12	13	14

Automation

Parker Hannifin GmbH
EMD HAUSER
Robert-Bosch-Str. 22
D-77656 Offenburg, Germany
Tel.: +49 (0)781 509-0
Fax: +49 (0)781 509-176
Website: www.parker-emd.com
e-mail: vertrieb@parker-emd.com

Parker Hannifin plc
Electromechanical Division
21 Balena Close
Poole, Dorset. BH17 7DX UK
Tel.: +44 (0)1202 69 9000
Fax: +44 (0)1202 69 5750
Website: www.parker-emd.com
e-mail: sales@parker-emd.com