MCR-f-UI-DC

Universal Frequency Transducer

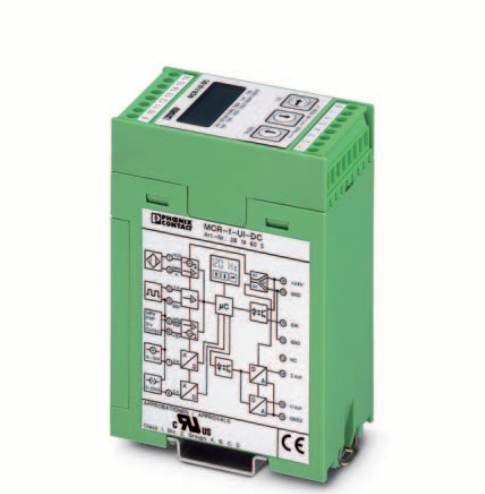

INTERFACE

Data Sheet
100240_en_05

1 Description

MCR-f-UI-DC, the programmable MCR frequency transducer, is a module for displaying and converting frequencies up to120 kHz. On the input side, all common frequency generator signals in 2, 3 and 4-wire technology, and signals from incremental encoders can be collected.

The input impulses are evaluated using period measurement and are then output by a processor as an analog voltage or current value to match the measuring range start and end value entered.

In order to achieve as short as possible reaction times, the inputs of the frequency transducer have purposely been designed without a frequency input filter. An automatic measurement range selection function (autorange) ensures that the measured value is always displayed with the optimum resolution. Frequency interferences can, however, lead to too large a division factor being selected for low input frequencies. This in turn can result in an erratic output signal (see "Operation with Disturbed Frequency Input Signals" on page 6).

In order to stabilize fluctuating input values, a filter function has been implemented for conversion into the analog output value. The depth of this filter can be set from 1 to 15 using the membrane keyboard. The optimum filter depth depends on the application.

In addition to the analog output, there is also a PNP transistor switching output with a maximum carrying capacity of 100 mA, for monitoring functions, for example (not short-circuit proof).

Specially for rotational speed measurement, it is possible to both enter the measuring range start and end value in revolutions per minute (RPM), and to observe the revolutions in RPM on the LCD (4-pos. + RPM as unit) during operation.

Make sure you always use the latest documentation.
It can be downloaded at www.download.phoenixcontact.com.

A conversion table is available on the Internet at
www.download.phoenixcontact.com/general/7000_en_00.pdf.

This data sheet is valid for all products listed on the following page:

2 Table of Contents

3 Ordering Data

Products

Description	Type	Order No.	Pcs./Pkt
Universal Frequency Transducer	MCR-f-UI-DC	2814605	1

4 Technical Data

General Data	
Supply voltage	20…30 V DC
Current consumption (without load)	< 60 mA (without switching output)
Transmission error	< 0.15% of end value (typ. 0.1%)
Temperature coefficient	< 0.015%/K (typ. 0,01%/K)
Test voltage:	
Input/power supply	1.5 kV, 50 Hz, 1 min.
Input/output	1.5 kV, 50 Hz, 1 min.
Output/power supply	1.5 kV, 50 Hz, 1 min.
Protection circuit	Transient protection, polarity protection
Ambient temperature range	-20 °C...65 °C
Operation indicator	LC display
Control panel	Membrane keypad with 3 keys and LCD
Type of connection	Pluggable screw connection
Installation position/assembly	Any, preferably horizontal
Dimensions (W / H / D)	45 mm x 75 mm x 110 mm
Conductor cross section	0.2...2.5 mm^2
Type of housing	ASA-PC (V0)

Measurement Input, Frequency Input	
Frequency range	0.1 Hz…120 kHz
Input sources	– PNP transistor outputs – NPN transistor outputs – NAMUR initiators – Potential-free relay contact (Dry Contact) – Frequency generator
Sensor supply	ca. 15 V DC / < 25 mA
Input frequency / peak time / resolution	0.1 Hz…120 kHz / ≤ 32 ms / ≥ 12 Bit
Signal level	⎍ 2 Vpp (0.1 Hz…120 kHz) ∿ 2 Vpp (8.0 Hz…120 kHz) ∿ 18 Vpp (1.0 Hz…120 kHz) max. 30 V (incl. DC voltage)
Pulse length	≥ 1µs

Current/Voltage Input	
Input signal	0…10 V / 0…20 mA
Cut-off frequency	10 Hz
Ascent time (10...90%)	25 ms

Output

Output signal	0…10 V / 10…0 V, 0…5 V / 5…0 V or 0(4)…20 mA / 20…0(4) mA
Output signal	
Current/voltage	max. 25 mA / 12.5 V
Load	
Current/voltage	≤ 500 Ω / ≥ 500 Ω
Alignment zero point / end value	± 25% / ± 25%
Switching output	– PNP transistor output, – switches the supply voltage to terminal SW, – can carry a load of 100 mA, – not short-circuit proof

Approval

PROCESS CONTROL EQUIPMENT FOR HAZARDOUS LOCATIONS 31ZN

Class I Div 2 Groups A, B, C, D

A) This equipment is suitable for use in Class I, Division 2, Groups A, B, C and D or non-hazardous locations only.

B) Warning - explosion hazard - substitution of components may impair suitability for Class 1, Division 2.

C) Warning - explosion hazard - do not disconnect equipment unless power has been switched off or the area is known to be non-hazardous.

Conformance With EMC Guideline 89/336/EEC And Low Voltage Directive 73/23/EEC

Immunity to Interference According to EN 61000-6-2[1]

Discharge of static electricity (ESD)	EN 61000-4-2	Criterion B[2]	8 kV discharge in air 6 kV contact discharge
Electromagnetic HF fields	EN 61000-4-3	Criterion A[3]	10 V/m
Fast transients (burst)	EN 61000-4-4	Criterion B[2]	Input/output/supply: 2 kV / 5 kHz
Surge voltage capacities (Surge)	EN 61000-4-5	Criterion B[2]	Input/output: 2 kV / 42 Ω Supply: 1 kV / 2 Ω
Conducted interference	EN 61000-4-6	Criterion A[3]	Input/output/supply: 10 V

Noise Emission According to EN 61000-6-4

Noise emission of housing	EN 55011[4]	Criterion A[5]	

[1] EN 61000 corresponds to IEC 61000

[2] Criterion B: Temporary impairment to operational behavior that is corrected by the device itself.

[3] Criterion A: Normal operating behavior within the defined limits.

[4] EN 55011 corresponds to CISPR11

[5] Criterion A: Area of application industry

4.1 Dimensions

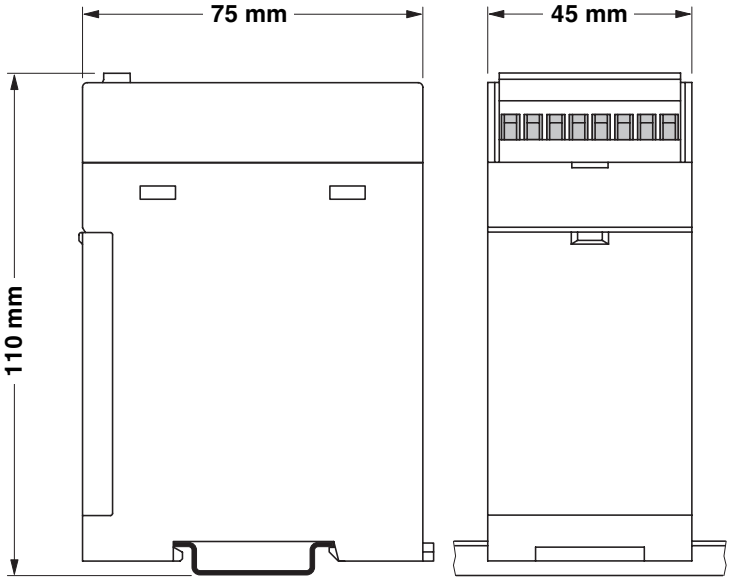

Figure 1 Dimensions

5 Features

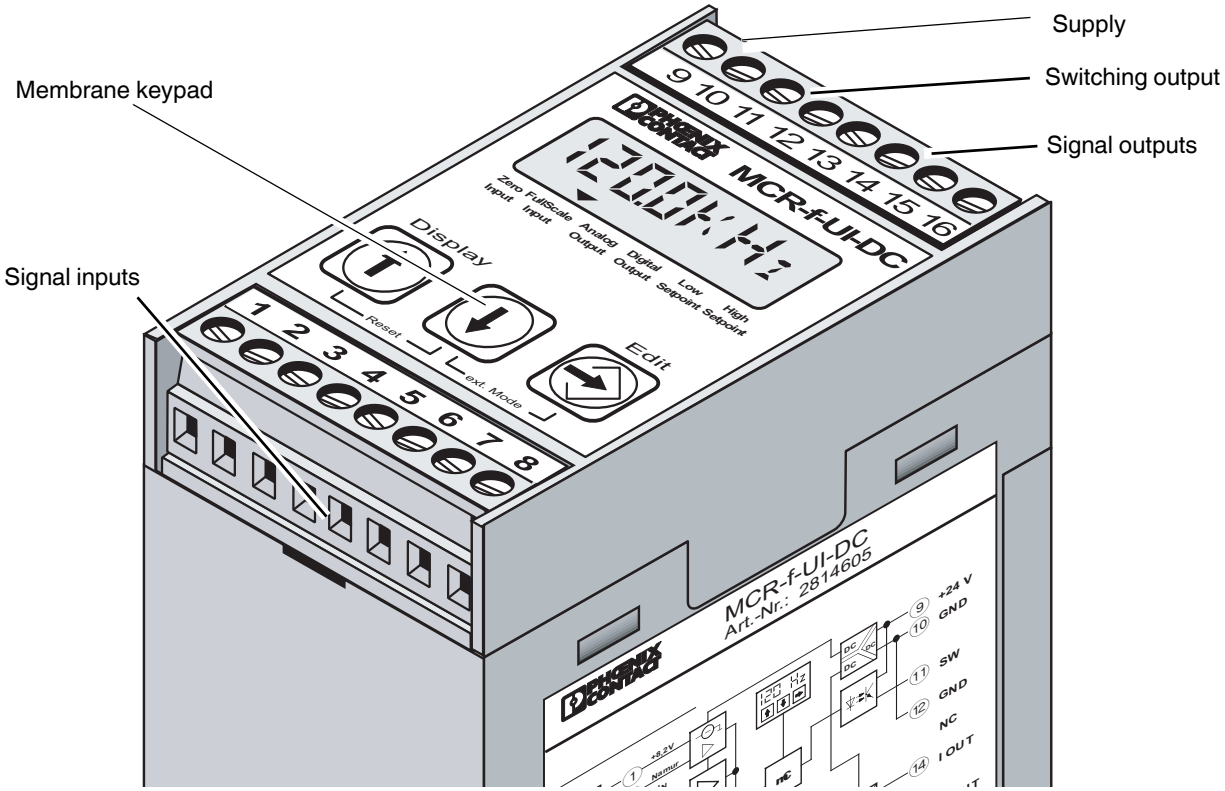

Figure 2 Features of MCR-f-UI-DC

6 Block Diagram

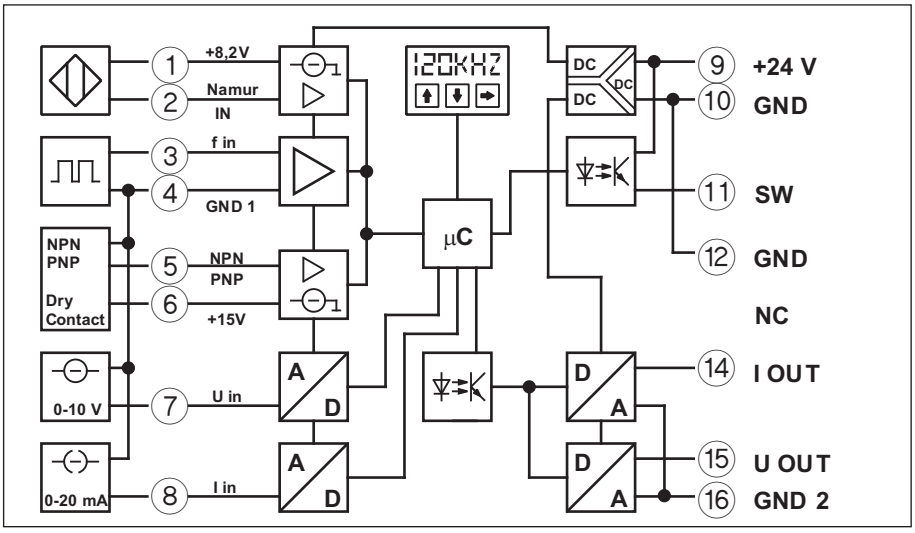

Figure 3 Block diagram

7 Operation with Disturbed Frequency Input Signals

7.1 Measures to Counter External Influences

- Use shielded conductors.
- Lay cables in an appropriate manner (EMC-compliant).
- Connect terminal 4 (GND 1) along the most direct route to PE.

7.2 If Signal Level > 20 V

- Unplug the jumper located in the module after opening the side flap. The jumper can be parked temporarily on **one** of the three free pins.
- Now route the frequency input signal to the module via terminal 2. The signal is returned via terminal 4 (GND 1).
- No additional settings are necessary.

7.3 If Signal Level > 10 V

- Connect the bottom two pins of the pin strip with the jumper.
- Now route the frequency input signal to the module via terminal 2.
- No additional settings are necessary.

8 Resetting to Delivery State

- Connect the top two pins of the pin strip (nearest display) with the jumper.
- Terminal 2 is now ready again for the connection of NAMUR sensors.

9 Connection Technology

2-wire DC (mechanical contact)

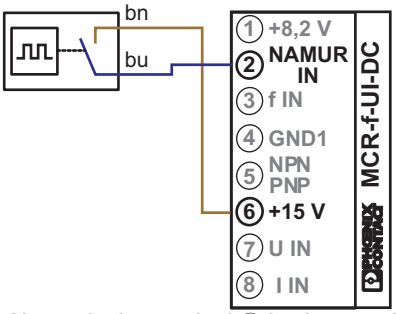

2-wire DC NAMUR sensor

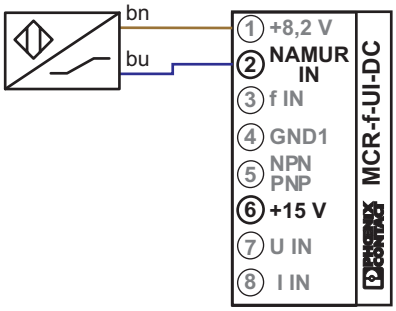

Alternatively, terminal ① is also possible instead of terminal ⑥.

3-wire DC with:
PNP transistor output

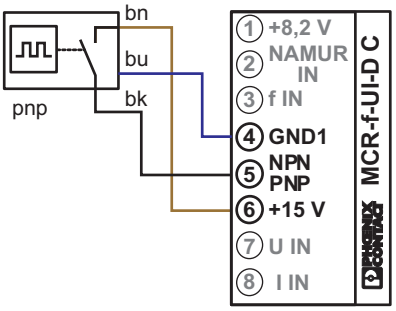

NPN transistor output

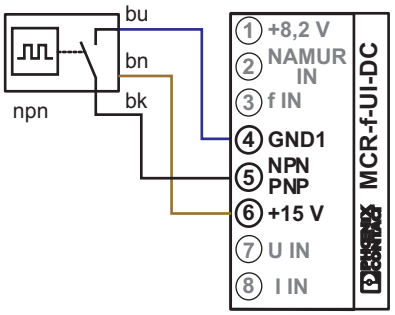

PNP transistor with pull-down resistor

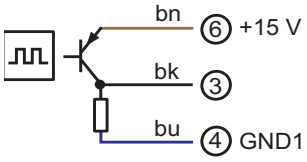

NPN transistor with pull-up resistor

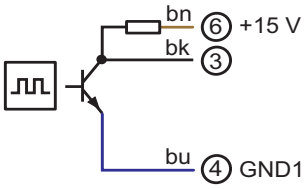

4-wire DC with:
PNP transistor output

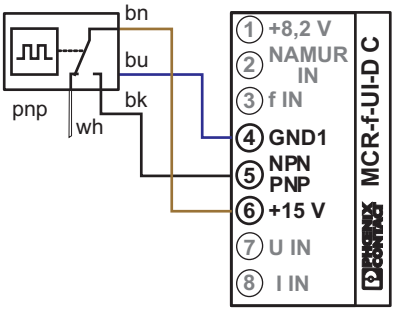

NPN transistor output

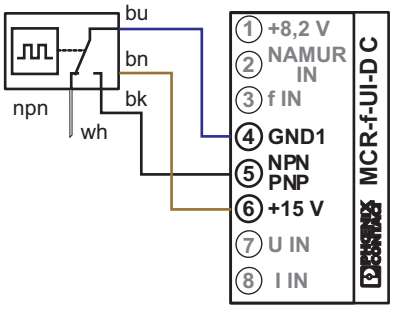

Incremental encoder with push-pull:

– External supply of signal generator

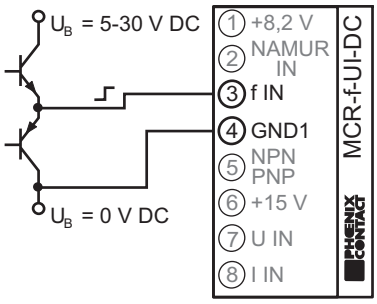

– Supply of signal generator from the module

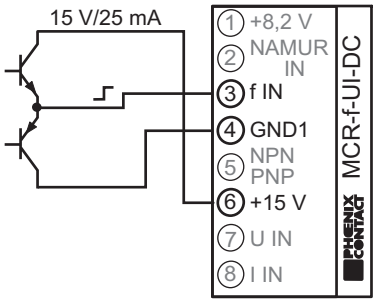

The external supply can also be picked off from terminals ⑨ +24VDC and ⑩ GND.

3-way isolation is then no longer provided.
The connection from terminal block ④ GND1 to terminal block ⑩ GND is essential!

Incremental encoder with HTL logic:

– External supply of signal generator

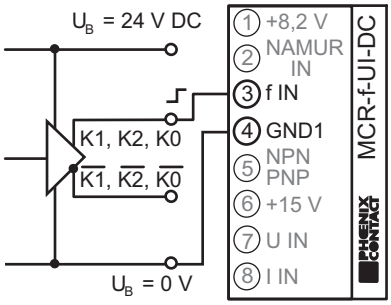

– Supply of signal generator from the module

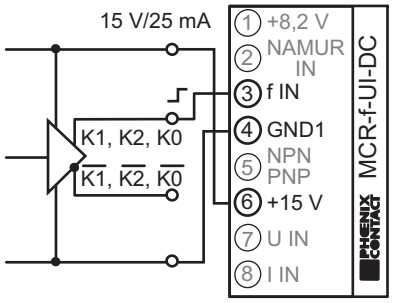

U input (direct current voltage)

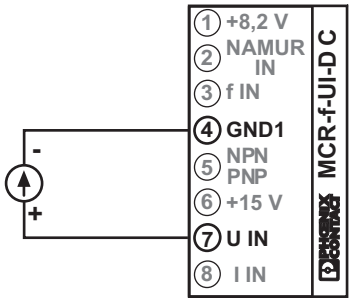

I input (direct current)

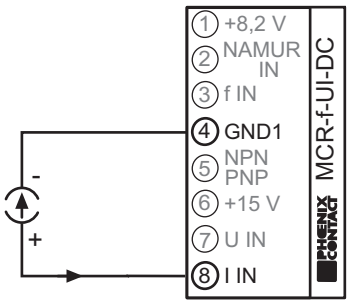

10 Functions of the Membrane Keypad

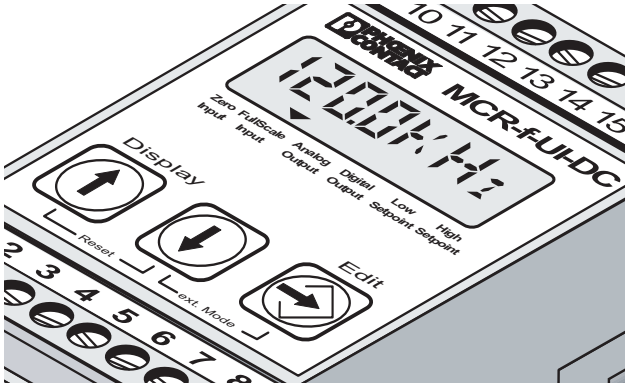

Figure 4 Membrane keypad

Press the key briefly: The output value calculated is displayed.
By pressing the key again, you return to the current input measured value.

Press the key briefly (< 0.sec.): Switches the module to edit mode for frequency input signals.

Press the key for at least 2 seconds: Switches the module to edit mode for analog input signals.

Press the keys briefly together (< 0.5 sec.): Switches the module to extended edit mode

Press the keys briefly together: Ends edit mode, without saving any settings that may have been made.

Adopts the current setting in edit mode and switches automatically to the next value.

10.1 Special Function of the Keys in Edit Mode

In edit mode for pulse input signals and for analog input signals, pressing the enter key in addition to the or key accelerates forward or backward counting.

By releasing the key and then briefly pressing it again, it is possible to carry out fine adjustments.

11 Display on LCD

11.1 Display Within Setting Range

In Hz / In RPM — Frequency input for NAMUR, 2, 3 and 4-wire sensors, incremental encoders with push-pull and HTL output signal and dry contact. Settings can be made in either Hz or RPM/kRPM [Display: kRM] / MRPM [Display: MRM].

In2 Hz / In2 RPM — Frequency input for NAMUR sensors with wire break and short-circuit recognition. Settings can be made in either Hz/kHz or RPM/kRPM [Display: kRM] / MRPM [Display: MRM].

In mA — Current input 0…20 mA

In V — Voltage input 0…10 V

dELAY 1 — ON delay of switching output.
(setting range 0…30 sec., default value = 0.00 sec.)

dELAY 2 — OFF delay of switching output.
(setting range 0…30 sec., default value = 0.00 sec.)

dLAYPWR — Setting POWER ON delay (switching output) (setting range 0…30 sec., default value = 1.00 sec.) During this period, the switching output does not react to events. This function is only of effect directly after switching on the supply voltage.

Lbrt.mE — Setting the wire-break detection time
(setting range 0.2…10.1 sec., default value = 10.1 sec.)
If no input signal is detected during this period, "No Input" appears on the display and the outputs behave according to their settings

SPAN — Setting the end value
(setting range 75…125%, default value = 100%)

OFFSET — Setting the zero point in relation to the previously set
output signal: (setting range -5…+5 mA / -2.5…+2.5 V;
default value = 0 mA / 0 V)

FACTOR — Setting the division factor from 0.1 to 9999 (default value = 1.0). Slow positioning tasks require holed coupling halves with multiple divisions (factor > 1). Measuring the rotational speed of a motor at the gearbox requires a small division factor (factor < 1).

OUtFilt — Setting the filter depth of the analog output when using frequencies as input value (setting range 1...15).
This function can only be configured using the membrane keyboard.

----UnR — Setting the analog output value if the measuring range is fallen below (setting range 0.00…24.00 mA, or 0.00…12.00 V)

----OvR — Setting the analog output value if the measuring range is exceeded (setting range 0.00…24.00 mA, or 0.00…12.00 V)

no.inPut — Setting the analog output value with wire break or an input signal that is not available (setting range 0.00…24.00 mA, or 0.00…12.00 V)

SAVE — Saving. By pressing the key, the set parameters are saved.

EXIT — By pressing the key, the setting mode is interrupted without saving the parameters set.

dEFAULT — By pressing the -key, the current settings are overwritten by the default values. The parameters of the frequency input and analog input are unaffected.

11.2 Displaying the Switching Output

..0" — If "High Setpoint" is exceeded, the transistor switches to "High",
If "Low Setpoint" is fallen below, it switches to "Low" (with hysteresis).

"0.. — If"High Setpoint" is exceeded, the transistor switches to "Low",
If "Low Setpoint" is fallen below, it switches to "High" (with hysteresis)

"1.. — If "High Setpoint" is fallen below, the transistor switches to "High".

..1" — If "High Setpoint" is exceeded, the transistor switches to "High".

ON — Transistor is permanently switched (N/C).

OFF — Transistor is permanently switched off (N/O).

..n.. — Between "Low Setpoint" and "High Setpoint", the transistor switches to "High".

"u" — If "Low Setpoint" is fallen below, and "High Setpoint" is exceeded, the transistor switches to "High".

11.3 Messages in Operating Mode

----UnR — Has fallen below the measuring range.
This message and the current frequency flash alternately if the frequency falls below the bottom measuring range set.

----OvR — Measuring range exceeded.
This message and the current frequency flash alternately if the frequency exceeds the top measuring range set.

no.inPut — No input signal.
This message flashes for the following reasons:
1. No sensor connected!
2. For NAMUR: a) Short-circuit or b) Wire-break!
3. Short-circuit frequency <-> GND!
4. No input signal found within the wire-break detection time set (I.br.time).

11.4 Menu Guidance

In edit mode, the arrow points to the function to be set.

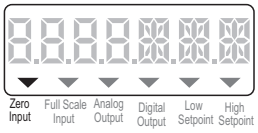

12 Menu Flowcharts

12.1 Configuration of the Frequency Input – Sequence of Menu

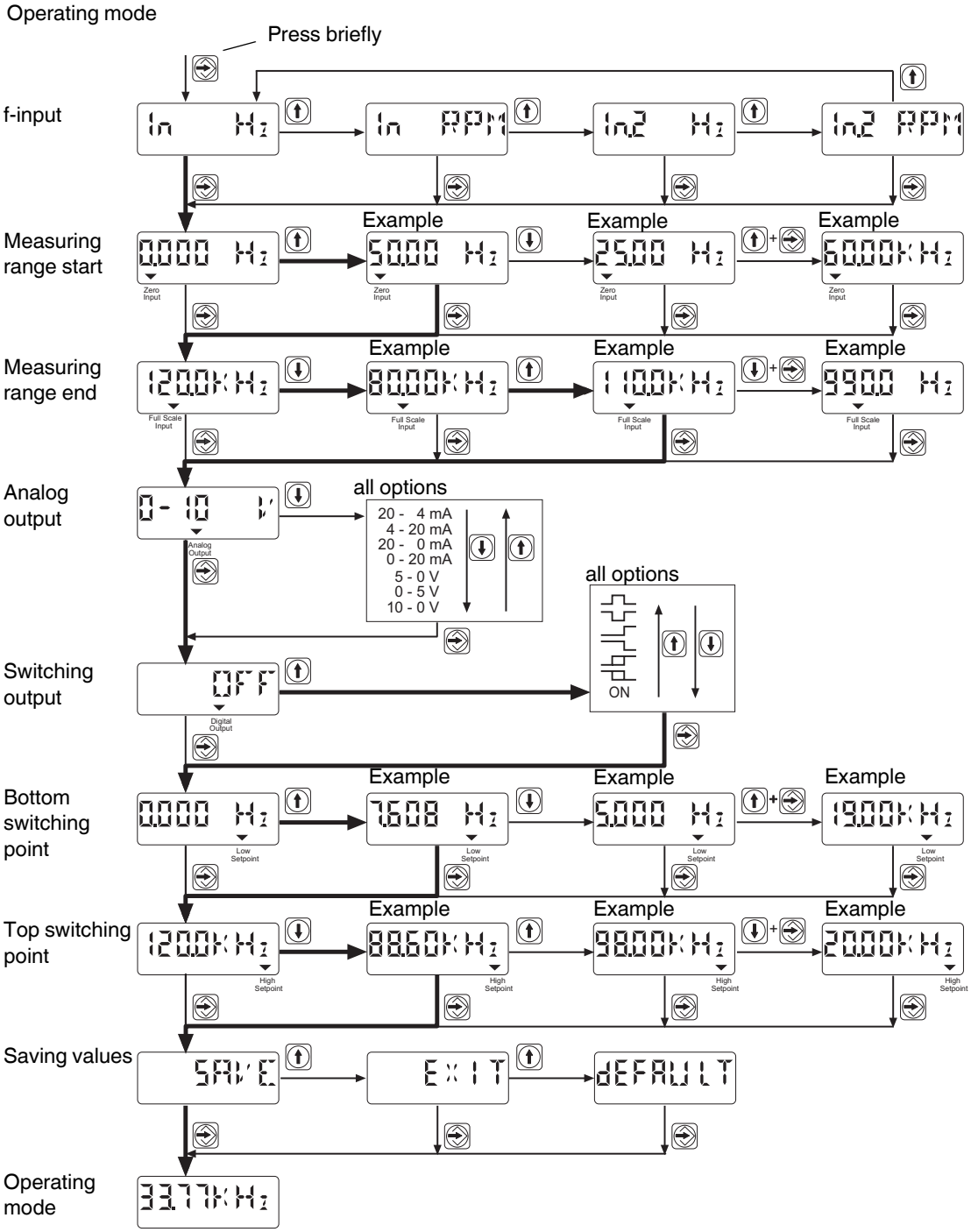

Figure 5 Configuration of the frequency input – sequence of menu

12.2 Configuration of the Analog Input – Sequence of Menu

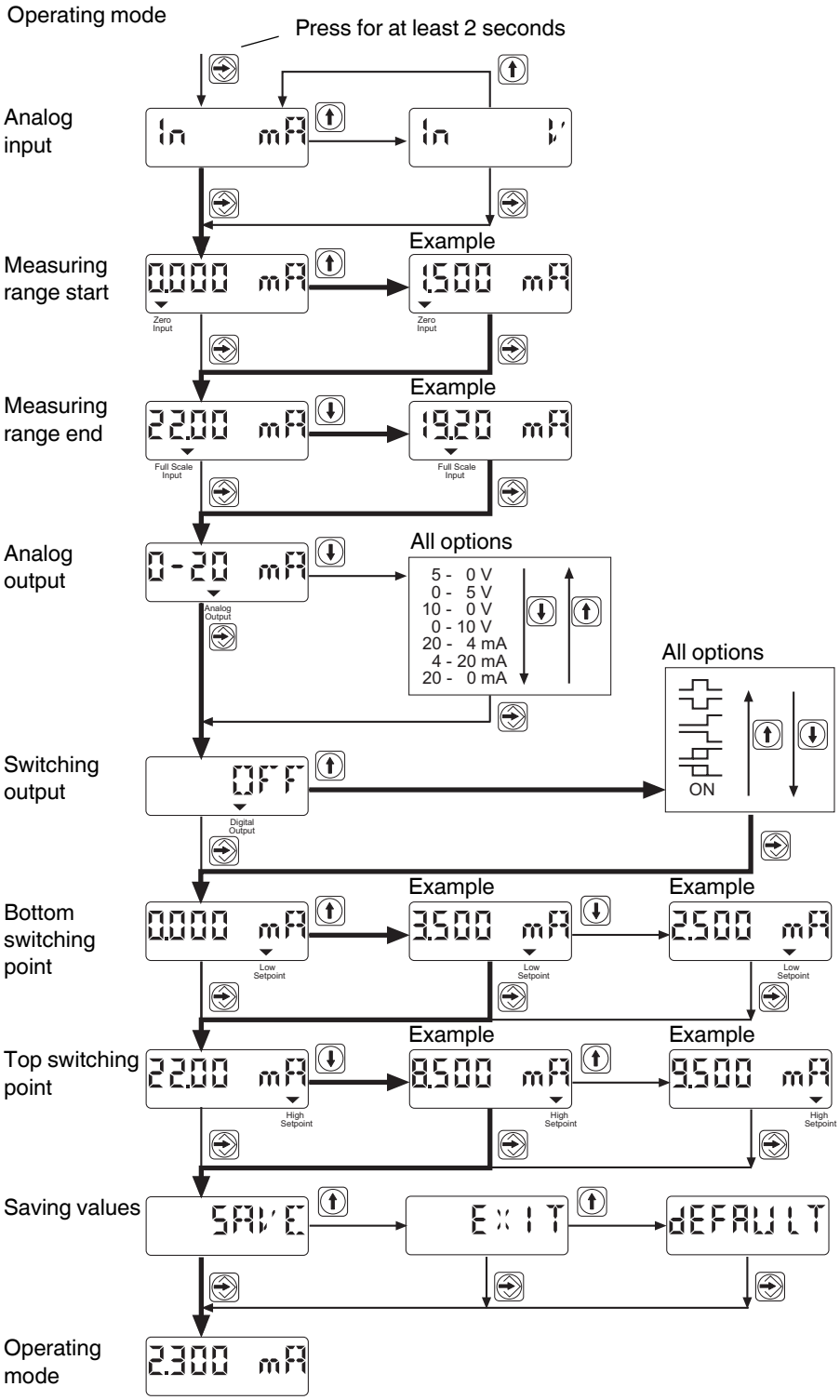

Figure 6 Configuration of the analog input – sequence of menu

12.3 Configuration of the Extended Mode – Sequence of Menu

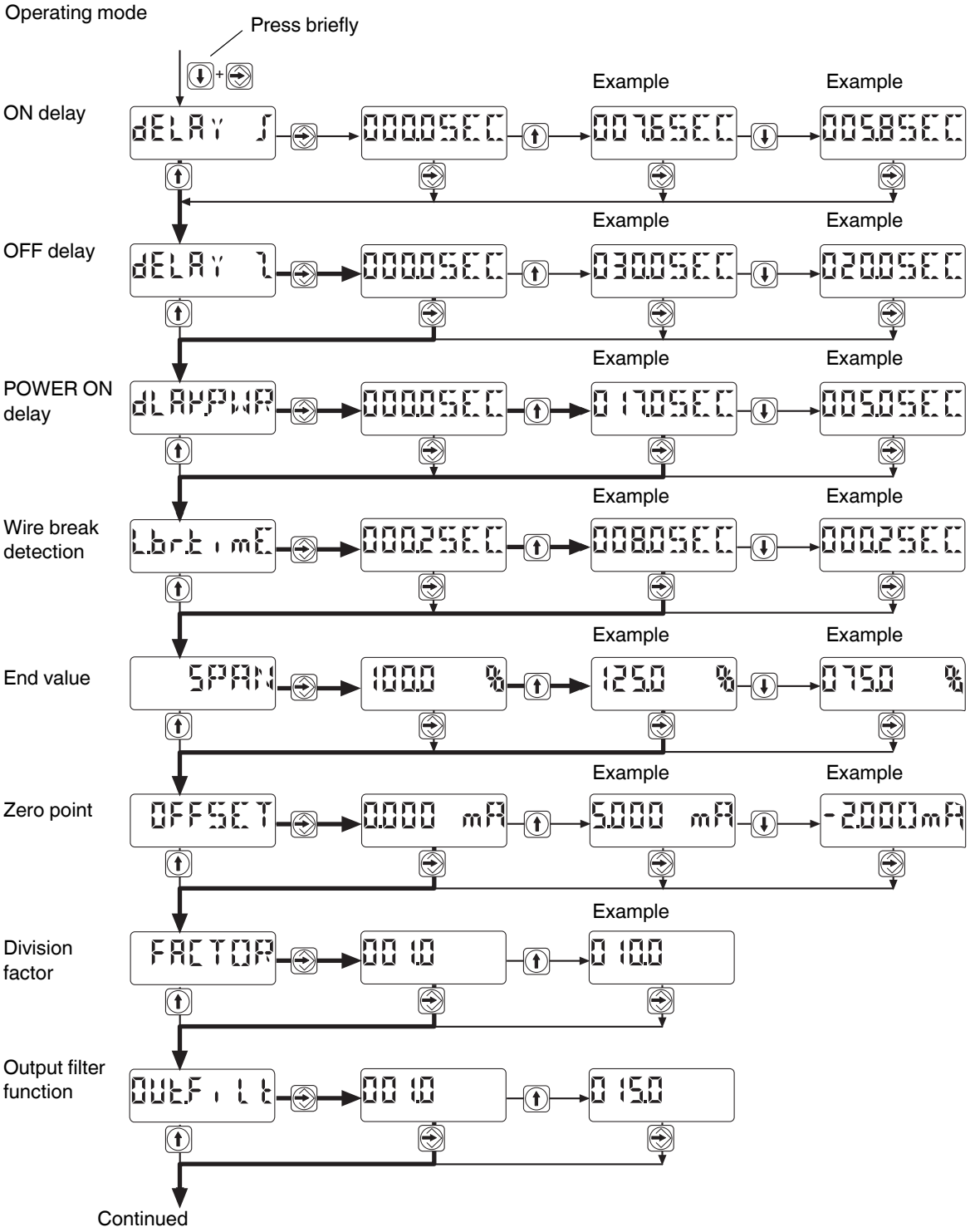

Figure 7 Configuration of the extended mode – Sequence of menu (1)

Continuation of the Sequence of Menu:

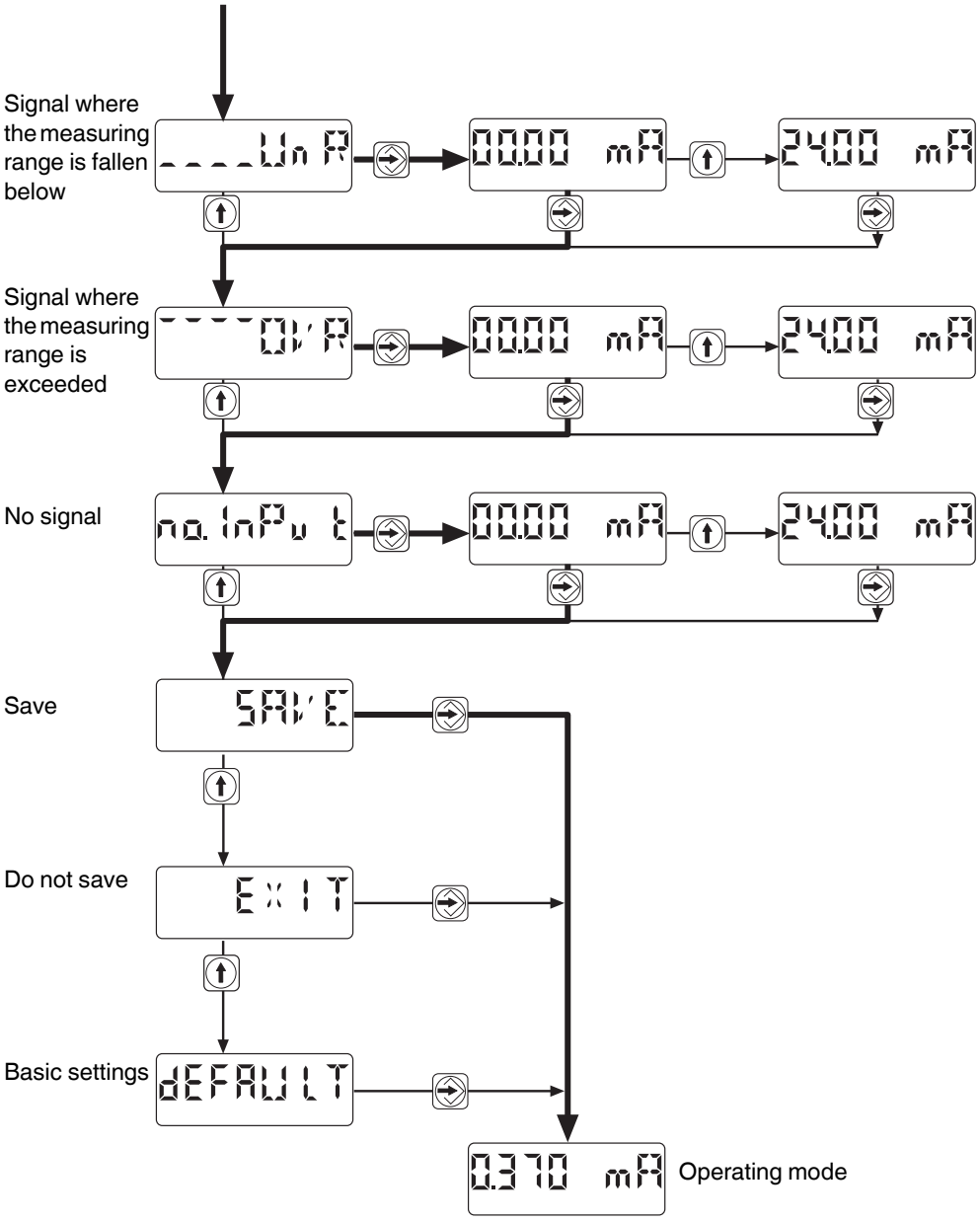

Figure 8 Configuration of the extended mode – sequence of menu (2)

13 Example: Configuration Based on a Frequency Input Signal

The module MCR-f-UI-DC has the following functions:

Frequency range:	5…45700 Hz, 3-wire NPN sensor
Output signal:	4…20 mA
Switching behavior:	bottom switching point ("High" to "Low") at 15 Hz top switching point ("Low" to "High") at 20 kHz
ON delay:	10 s
OFF delay:	5 s
Wire-break detection time:	1 s

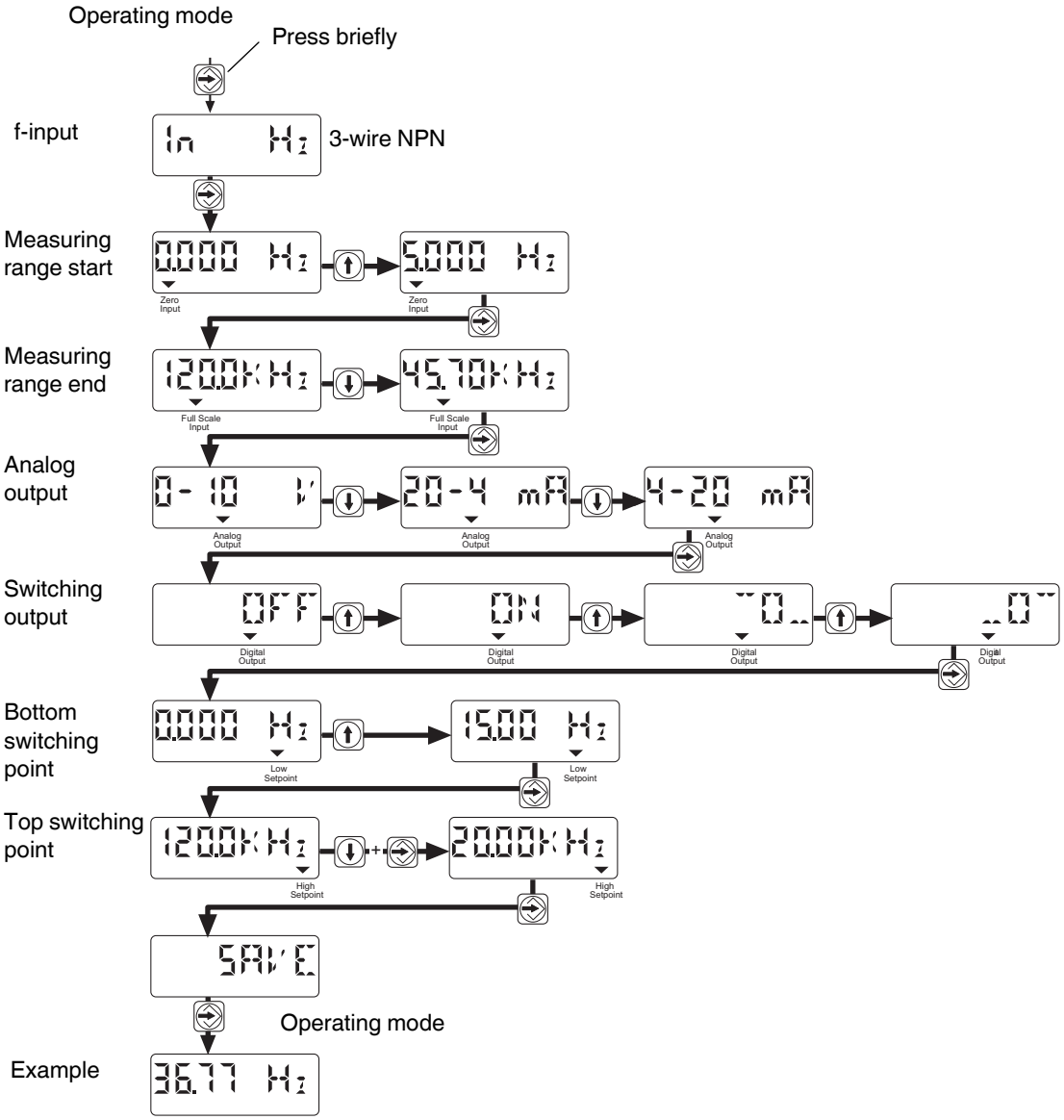

Figure 9 Example: configuration based on a frequency input signal

13.1 Continuation of the Configuration Example:

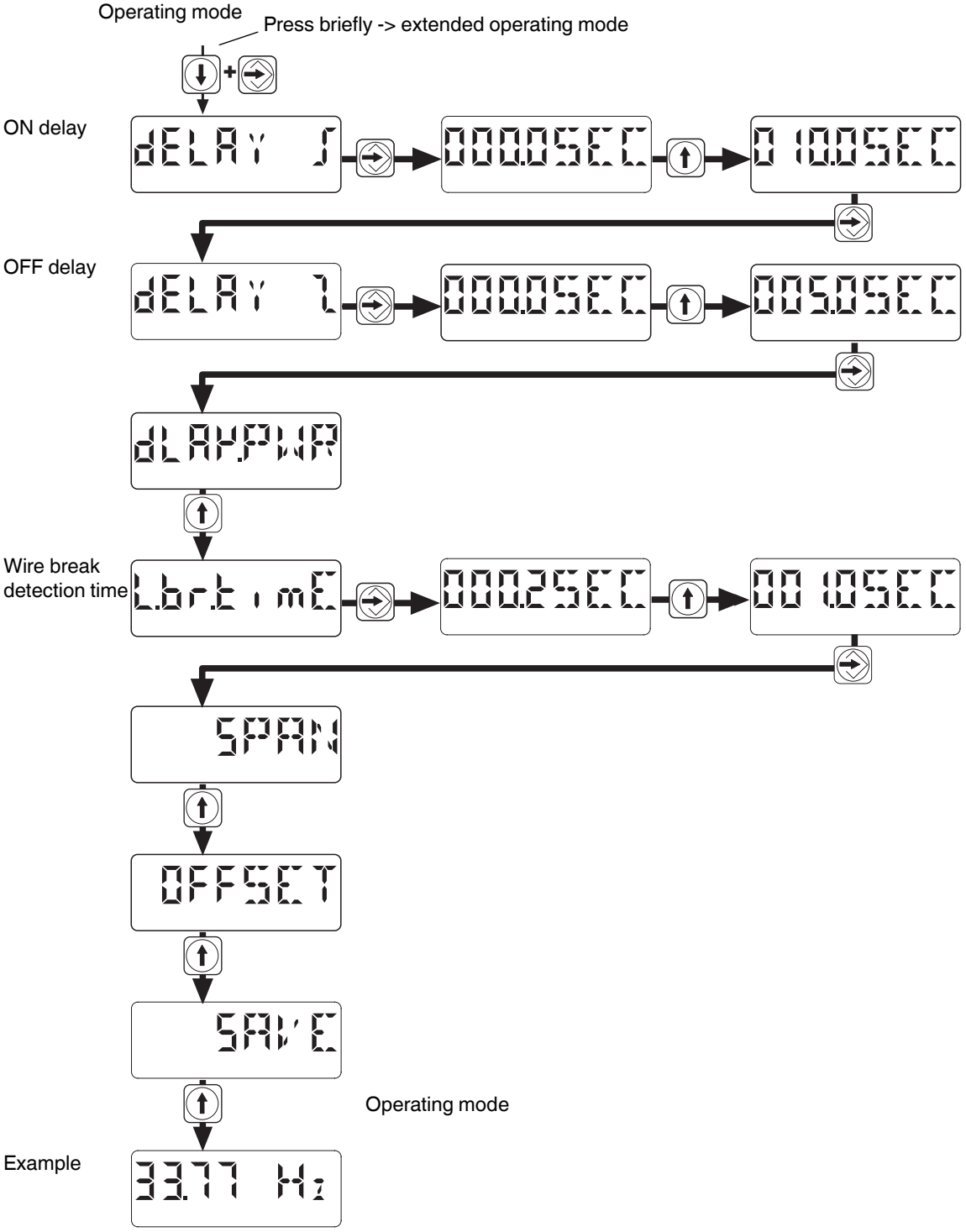

Figure 10 Continuation of the configuration example

14 Configuration Software MCR/ PI-CONF-WIN-...

The MCR configuration software is available for the configuration and visualization of all parameters for the MCR-f-UI-DC frequency transducer.

The MCR-Software runs under Windows 95®, Windows 98®, Windows NT®, Windows ME®, Windows 2000® and under Windows XP®.

The modules are configured via a serial interface. A label is also created by the software that can be placed on the module.

15 Application Example: Speed Measurement of a Drive

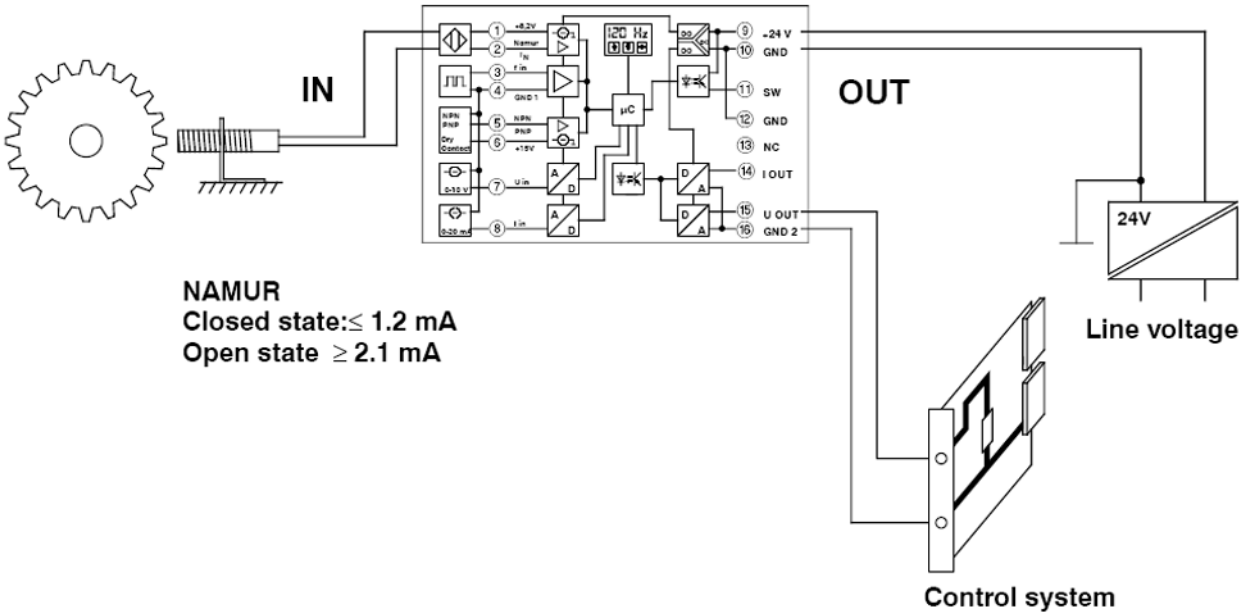

Figure 11 Application example: speed measurement of a drive