■ Outline

The sensor detects "PM (particle matters) in the air" by optical method.

This sensor uses LD (laser diode) as light-emitting device and PD (photo diode) as light-receiving device.

The LD inside the sensor emits light to the air in a detection area. The PD inside the sensor detects scattering light which correlated to the actual floating particles in the air. A Microcomputer (MCU) inside the sensor analyzes the wave profile from PD by optimistic algorithm, then output a converted mass-density (μg/m^3) through I^2C & UART interface.

■ Main Features

・Smaller size
・High accuracy (±10%, from low to high concentrations)
・High sensitivity & quick response
・Maintain performance by unique Auto Calibration Function
・Minimize dust accumulation by optimized air pathway structure and it makes possible to avoid "tracking" for electrical safety

■ Environmental Responsiveness

・This product complies with RoHS directive.

■ Usage Application

・To detect the floating particle in the air (PM2.5, PM10 & PM1, cigarette smoke, house dust, etc.)
Ex: air purifier, fan, and air conditioner

■ Dimensions

37 x 37 x 12 (thickness) [mm]

■ Weight

Approx. 13 [g]

■ Operating Characteristics

Category	Characteristics	Note
Operating voltage	DC5V +/-10%	
Consumption current	Below 100mA	
Operating temperature	-10 ~ 60℃, under 95%RH	no dew condensation
Storage temperature	-40 ~ 70℃, under 95%RH	no dew condensation
Minimum detectable particle	0.3μm	
Indicatable range:	0μg/m^3 – 2,000μg/m^3 (UART) 0μg/m^3 – X,XXXμg/m^3 (I^{2}C)	
Maximum consistency error	±10%	35μg/m^3<、<1,000μg/m^3
Response time	1 sec	
Time to first reading	8 sec	
Initial stability time	Approx. 28 sec after power on	8 sec for initialization 20 sec for average processing
Output method	Digital signal output ・I^{2}C & UART (TTL)	Refer to the Communication Specifications

■ Block Diagram

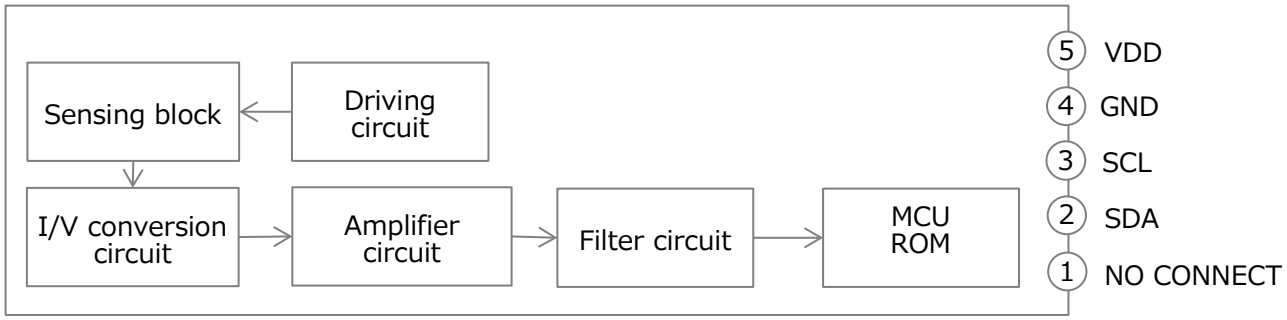

Connector : SM05B-GHS-TB(LF)(SN)（J.S.T. Mfg. Co., Ltd.）