Intelligent Drivesystems, Worldwide Services

GB

BU 0700

NORDAC SK 700E

Frequency inverter manual

NORD DRIVESYSTEMS

N O R D A C SK 700E frequency inverters

Safety and operating instructions for drive power converters

(as per: Low Voltage Directive 2006/95/EEC)

1. General

During operation, drive power converters may, depending on their protection class, have live, bare, moving or rotating parts or hot surfaces.

Unauthorised removal of covers, improper use, incorrect installation or operation causes a risk of serious personal injury or material damage.

Further information can be found in this documentation.

All transportation, installation and initialisation and maintenance work must be carried out by qualified personnel (comply with IEC 364, CENELEC HD 384, DIN VDE 0100, IEC 664 and DIN VDE 0110, and national accident prevention regulations).

For the purposes of these basic safety instructions, qualified personnel are persons who are familiar with the assembly, installation, commissioning and operation of this product and who have the relevant qualifications for their work.

2. Proper use in Europe

Drive power converters are components intended for installation in electrical systems or machines.

When installed in machines, the drive power converter cannot be commissioned (i.e. commencement of the proper use) until it has been ensured that the machine meets the provisions of the EC Directive 2006/42/EEC (Machine Directive); EN 60204 must also be complied with.

Commissioning (i.e. implementation of the proper use) is only permitted when the EMC directive (2004/108/EEC) is complied with.

Drive power converters with a CE label meet the requirements of the Low Voltage Directive 2006/95/EEC. The harmonised standards for drive power converters stated in the declaration of conformity are used.

Technical data and information for connection conditions can be found on the rating plate and in the documentation, and must be complied with.

The drive power converters may only be used for safety functions which are described and explicitly approved.

3. Transport, storage

Information regarding transport, storage and correct handling must be complied with.

4. Installation

The installation and cooling of the equipment must be implemented according to the regulations in the corresponding documentation.

The drive power converter must be protected against impermissible loads. Especially during transport and handling, components must not be deformed and/or insulation distances must not be changed. Touching of electronic components and contacts must be avoided.

Drive power converters have electrostatically sensitive components, which can be easily damaged by incorrect handling. Electrical components must not be mechanically damaged or destroyed (this may cause a health hazard!).

5. Electrical connection

When working on live drive power converters, the applicable national accident prevention regulations must be complied with (e.g. BGV A3, formerly VBG 4).

The electrical installation must be implemented as per the applicable regulations (e.g. cable cross-section, fuses, earth lead connections). Further instructions can be found in the documentation.

Information regarding EMC-compliant installation – such as shielding, earthing, location of filters and installation of cables – can be found in the drive power converter documentation. These instructions must be complied with even with CE marked drive power converters. Compliance with the limit values specified in the EMC regulations is the responsibility of the manufacturer of the system or machine.

6. Operation

Systems where drive power converters are installed must be equipped, where necessary, with additional monitoring and protective equipment as per the applicable safety requirements, e.g. legislation concerning technical equipment, accident prevention regulations, etc.

The parameterisation and configuration of the drive power converter must be selected so that no hazards can occur.

All covers must be kept closed during operation.

7. Maintenance and repairs

After the drive power converter is disconnected from the power supply, live equipment components and power connections should not be touched immediately, because of possible charged capacitors. Observe the applicable information signs located on the drive power converter.

Further information can be found in this documentation.

These safety instructions must be kept in a safe place!

1 General information

The series NORDAC SK 700E is the follow-on development of the proven vector series. These devices are characterised by the high modularity and excellent control characteristics.

These devices are provided with non-sensor vector current control system which constantly ensures an optimised voltage-to-frequency ratio in combination with a motor model of an three-phase asynchronous motor. This has the following significance for the drive: Peak start-up and overload torques at constant speed.

Due to its modular construction, the variously combinable technology units, customer units and special extension units, this device series is suitable for all possible applications.

Devices for constant load:

Due to the numerous setting options, these inverters are capable of controlling all three-phase motors. The performance range goes **from 1.5kW to 22kW** (3~ 380V...480V) with an integrated line filter and from **30kW to 132kW** (3~ 380V...480V) with optional external line filter. The overload capacity of these devices is 200% for 3.5 seconds and 150% for 60 seconds.

Device for quadratically increasing loads SK 700E-163-340-O-VT:

In the performance range **160kW** (3~ 380V...480V) a variant for quadratically increasing load is available. This load profile is typical for **fans and various pump applications**. In contrast to the devices used for constant load torque, the overload capacity here is limited to 125%.

NOTE: The SK 700E with the performance range **30kW to 160kW** varies in some technical details from the lower performance devices. Details can be found in this manual.

This manual is based on the device software **V3.4 Rev4 (P707)** for the SK 700E. If the frequency inverter used has a different version, this may lead to some differences. If necessary, you can download the current manual from the Internet (http://www.nord.com/)

The most important amendments in comparison with edition 3910 are the correction of errors and amendments associated with UL certification.

1.1 Overview

Properties of the basic device:

- Heavy starting torque and precise motor speed control setting with sensorless current/vector control.
- Can be mounted next to each other without additional spacing
- Permissible environmental temperature range: 0 to 50°C (please refer to technical data)
- Integrated line filter for limit curve A as per EN 55011 (up to and including 22kW)
- Automatic measurement of the stator resistance
- Programmable direct current braking
- Integrated brake chopper for 4 quadrant drive
- Four separate online switchable parameter sets

The characteristics of the basic equipment with an additional technology unit, customer unit or special extension unit are described in Chapter 3, 'Operation and displays'.

1.2 Delivery

Check the equipment **immediately** after delivery/unpacking for transport damage such as deformation or loose parts.

If there is any damage, contact the carrier immediately and implement a thorough assessment.

Important! This also applies even if the packaging is undamaged.

1.3 Scope of supply

Standard design:
- Mounting unit IP 20
- Integrated brake chopper
- Integrated line filter for limit curve A as per EN 55011 (up to and including 22kW)
- Blanking cover for technology unit slot
- Shield angle
- Operating manual

Available accessories:
- Brake resistor, IP 20 (Chapter 2.7/2.8)
- Line filter for limit curve A or B as per EN 55011, IP 20 (Chapter 2.3/2.4)
- Line and output choke, IP 00 (Chapter 2.5/2.6)
- Interface converter RS 232 → RS 485 (supplemental description BU 0010)
- NORD CON, PC parameterising software
- *p-box* (ParameterBox), external control panel with LCD plain text display, connection cable (supplemental description BU 0040 DE)

Technology unit:
- ControlBox, detachable control panel, 4-figure 7-segment LED display
- ParameterBox, detachable control panel with background illuminated LCD plain text display
- RS 232, accessory component for RS 232 interface
- CANbus, accessory component for CANbus communication
- Profibus, accessory component for Profibus DP
- CANopen, Bus switch-on
- DeviceNet, Bus switch-on
- InterBus, Bus switch-on
- AS interface

Additional BUS manuals are available..
> www.nord.com <

Customer units:
- Basic I/O, limited scope for signal processing
- Standard I/O, moderate scope for signal processing and RS 485
- Multi I/O, high scope for signal processing
- CAN I/O, Bus switch-on via CANbus
- Profibus I/O, Bus switch-on via Profibus DP

Special extension units:
- PosiCon I/O, positioning component (supplemental description BU 0710 DE)
- Encoder I/O, incremental encoder input for speed control

1.4 Safety and installation information

NORDAC SK 700E frequency inverters are equipment for use in industrial high voltage systems and are operated at voltages that could lead to severe injuries or death if they are touched.

- Installation and other work may only be carried out by qualified electricians and when the device is disconnected. The manual must always be available for these persons and must be complied with.

- Local regulations for the installation of electrical equipment as well as for accident prevention must be complied with.

- The equipment continues to carry hazardous voltages for up to 5 minutes after being switched off at the mains. The equipment may only be opened or the cover or control element removed 5 minutes after the equipment has been disconnected from the power supply. All covers must be put back in place before the line voltage is switched back on again.

- Even during motor standstill (e.g. caused by a release block, blocked drive or output terminal short circuit), the line connection terminals, motor terminals and braking resistor terminals may still conduct hazardous voltages. A motor standstill is not identical to galvanic isolation from the mains.

- **Attention**, even parts of the control card and, in particular, the connection plug for the removable technology units can conduct hazardous voltages. The control terminals are mains voltage free.
- **Warning**, under certain settings the frequency inverter can start automatically after the mains are switched on.

- The circuit boards contain highly-sensitive MOS semiconductor components that are particularly sensitive to static electricity. Avoid touching circuit tracks and components with the hand or metallic objects. Only the terminal strip screws may be touched with insulated screwdrivers when connecting the cables.

- The frequency inverter is only intended for permanent connection and may not be operated without effective earthing connections that comply with local regulations for large leak currents (> 3.5mA). VDE 0160 requires the installation of a second earthing conductor or an earthing conductor cross-section of at least 10 mm^2.

- Normal **FI-circuit breakers** are not suitable as the sole protection in three-phase frequency inverters when local regulations do not permit a possible DC proportion in the fault current. The standard FI circuit breaker must comply with the new design as per VDE 0664.

- The inverter must be mounted in a switch cabinet that is suitable for its immediate surroundings. In particular it must be protected from excess humidity, corrosive gases and dirt.

- In normal use, NORDAC SK 700E frequency inverters are maintenance free. The cooling surfaces must be regularly cleaned with compressed air if the ambient air is dusty.

ATTENTION! DANGER TO LIFE!

The power unit can continue to carry voltages for up to 5 minutes after being switched off at the mains. Inverter terminals, motor cables and motor terminals may carry voltage!

Touching open or free terminals, cables and equipment components can lead to severe injury or death!

CAUTION

- Children and the general public must be kept away from the equipment!
- The equipment may only be used for the purpose intended by the manufacturer. Unpermitted modifications and the use of spare parts and additional equipment that has not be bought from or recommended by the equipment manufacturer can lead to fire, electric shock and injury.
- Keep these operating instructions in an accessible location and ensure that every operator uses it!

Warning: This product is covered under marketing classification IEC 61800-3. In a domestic environment, this product can cause high frequency interference, which may require the user to take appropriate measures.

An appropriate measure would be the inclusion of a recommended line filter.

1.5 Certifications

1.5.1 European EMC guideline

If the NORDAC SK 700E is installed according to the recommendations in this instruction manual, it meets all EMC directive requirements, as per the EMC product standard for motor-operated systems EN 61800-3.

(See also Chapter 8.3 Electromagnetic compatibility [EMC].)

1.5.2 UL and cUL certification

(Used in North America)

"Suitable for use on a circuit capable of delivering not more than 5000 rms symmetrical amperes, 380…480 Volts (three phase)" and "when protected by 600V J class fuses" (Frequency inverter size 1 … 4), resp. „when protected by 600V R class fuses or faster" (Frequency inverter size 5 … 7) as described in Chapter 7.4."

Suitable for use on a circuit capable of delivering not more than 5000A (symmetrical), 380...460 Volts (three phase) and when protected by "*600V* J class fuses" (Size 1 ...4 frequency inverters) or a "*600V* R class fuse or faster" (Size 5 ... 7 frequency inverters) as described in Chap. 7.4.

NORDAC SK 700E frequency inverters have motor overload protection.
Further technical details can be found in Section 7.4.

- *Not incorporated Overspeed Protection.*
- *Relays on extension units and customer interface units may only be used at 230V ac maximum, same phase only.*
- *Maximum Surrounding Air Temperature 40°C.*
- *Torque Value for field wiring terminals:*
  - *Models SK700E-151-340-A up to SK700E-751-340-A (mains circuit, motor, braking resistor): 4.4 … 5.3 lb-in (0.5 … 0.6 Nm)*
  - *Models SK700E-112-340-A up to SK700E-152-340-A (mains circuit, motor, braking resistor): 11 … 13.27 lb-in (1.2 … 1.5 Nm)*
  - *Models SK700E-182-340-A up to SK700E-222-340-A (mains circuit, motor, braking resistor): 21.2 … 35.4 lb-in (2.4 … 4.0 Nm)*
  - *Models SK700E-302-340-A up to SK700E-372-340-A*
    Mains circuit: 53.1 … 70.8 lb-in (6 … 8Nm)
    motor and braking resistor: 28.32 … 32.74 lb-in (3.2 … 3.7 Nm)
  - *Models SK700E-452-340-A up to SK700E-552-340-A*
    Mains circuit and motor: 53.1 … 70.8 lb-in (6 … 8 Nm)
    braking resistor: 28.32 … 32.74 lb-in (3.2 … 3.7Nm)
  - *Models SK700E-752-340-A up to SK700E-902-340-A*
    Mains circuit and motor: 132.7 … 177 lb-in (15 … 20Nm)
    braking resistor: 53.1 … 70.8 lb-in (6 … 8Nm)

2 Assembly and installation

2.1 Installation

NORDAC SK 700E frequency inverters are available in various sizes depending on the output. When installed in a control cabinet, the size, power dissipation and perm. ambient temperature must be taken into account to prevent device failures.

The equipment requires sufficient ventilation to protect against overheating. Reference values apply here for the spaces above and below the frequency inverter within the control cabinet.

(**up to and inc. 22kW**, above > 100mm, below > 100mm and **from and inc. 30kW** above > 200mm, below > 200mm)

Electrical components (e.g. cable ducts, contactors, etc.) can be located within these limits. There is a height-dependent minimum separation distance from the frequency inverter for these components. This distance must be a minimum 2/3 of the object height. (Example: cable duct 60mm high →2/3· 60mm = 40mm gap)

Additional side gaps for devices up to and inc. 55kW are not required. Mounting can be immediately next to each other. The installation position is normally vertical. It must be ensured that the cooling ribs on the rear of the device are covered with a flat surface to provide good convection.

Warm air must be vented above the device!

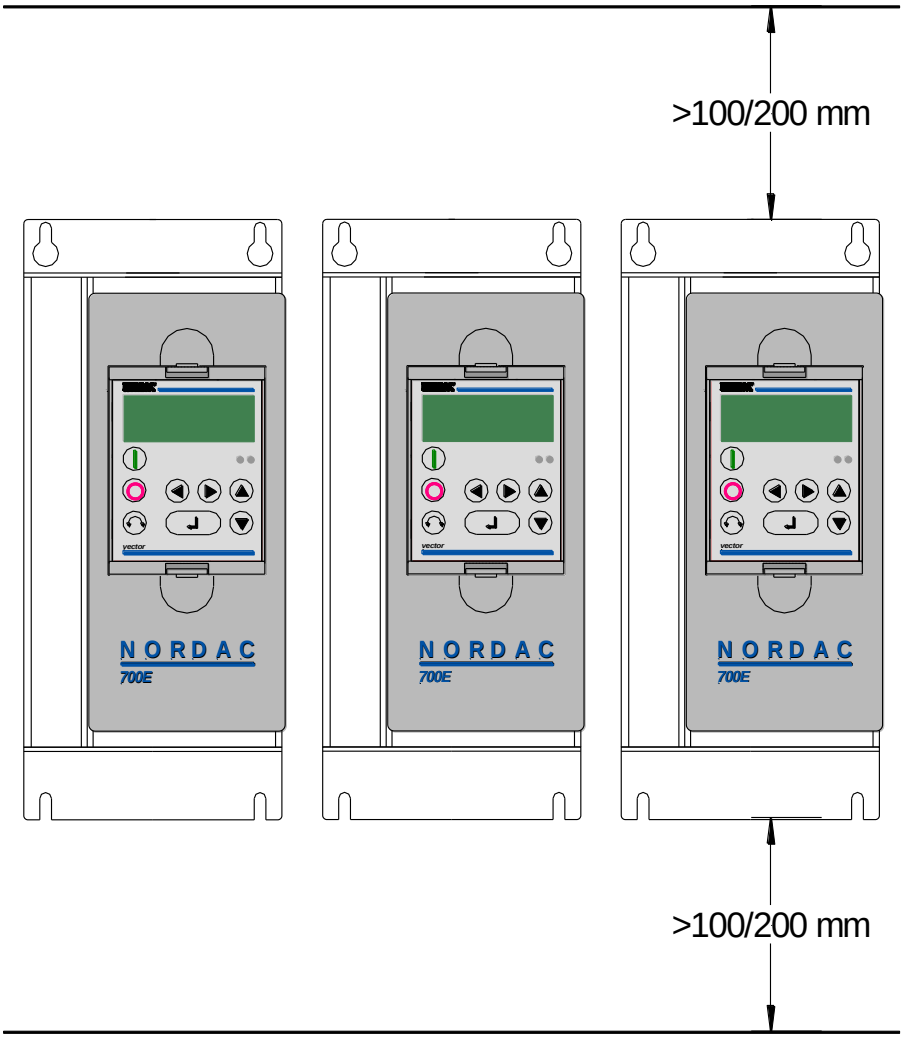

If several inverters are arranged above each other, ensure that the upper air entry temperature limit is not exceeded. (See also Chapter 7, Technical data). If this is the case, it is recommended that an "obstacle" (e.g. a cable duct) is mounted between the inverters so that the direct air flow (rising warm air) is impeded.

2.2 Dimensions of the frequency inverter

Device type	Length L1	Width B1	Installation depth T	Detail: mounting				Weight approx.
				Length L2	Width B2	Length L3	∅	
SK 700E-151-340-A **...** SK 700E-401-340-A	281	123	219	269	100	223	5.5	4 kg
SK 700E-551-340-A SK 700E-751-340-A	331	123	219	319	100	273	5.5	5 kg
SK 700E-112-340-A SK 700E-152-340-A	386	167	255	373	140	315	5.5	9 kg
SK 700E-182-340-A SK 700E-222-340-A	431	201	268	418	172	354	6.5	12.5 kg
SK 700E-302-340-O SK 700E-372-340-O	599	263	263	582	210	556	6.5	24kg
SK 700E-452-340-O SK 700E-552-340-O	599	263	263	582	210	556	6.5	28kg
SK 700E-752-340-O … SK 700E-902-340-O	736	263	336	719	210	693	6.5	45kg
SK 700E-113-340-O **...** SK 700E-163-340-O	1207	354	263	1190	142 *	1156	6.5	115kg
All dimensions in mm								

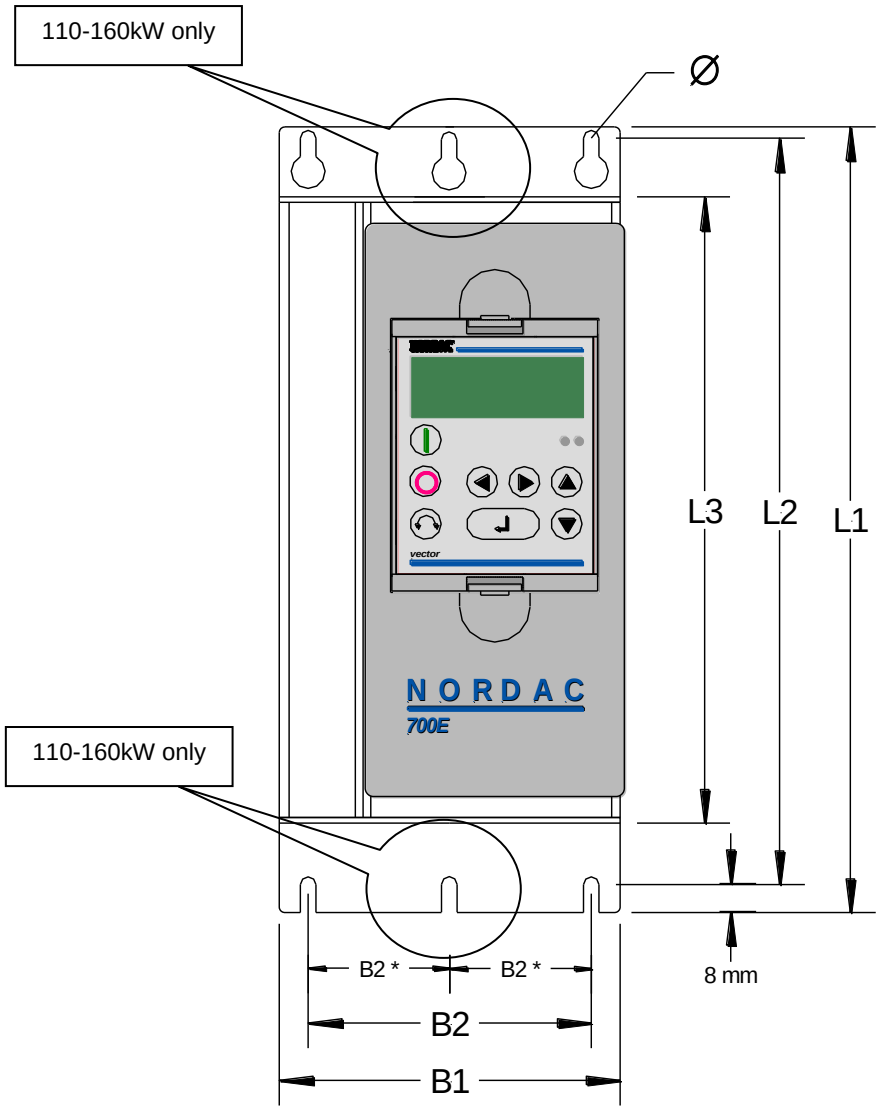

2.3 UB line filter up to 22kW (accessory)

An additional external line filter can be installed into the line supply of the frequency inverter to maintain the increased noise suppression level (class B as per EN 55011).

When connecting the line filter, comply with Chapter 2.9 "Wiring guidelines" and 8.3 "EMC". In particular, ensure that the pulse frequency is set to the default value (P504 = 4/6kHz) and that the maximum motor cable length (30m) is not exceeded and a shielded motor cable is used.

Mains connection is by means of screw connections at the lower end of the filter. Inverter connection is by means of a fixed cable of a suitable length (235-385mm).

The filter should be located as close as possible to the inverter; it can be used as a substructure or *Book Size* component.

Inverter type	**Filter type**	Length L1	Width B1	Depth T	Detail: mounting		Connection cross-section
					Length L2	Width B2	
SK 700E-151-340-A **…** SK 700E-401-340-A	**SK LF1-460/14-F**	281	121	48	268	100.5	6
SK 700E-551-340-A SK 700E-751-340-A	**SK LF1-460/24-F**	331	121	58	318	100.5	6
SK 700E-112-340-A SK 700E-152-340-A	**SK LF1-460/45-F**	382	163	73	369	140	10
SK 700E-182-340-A SK 700E-222-340-A	**SK LF1-460/66-F**	431	201	73	418	172	16
						All dimensions in mm	mm^2

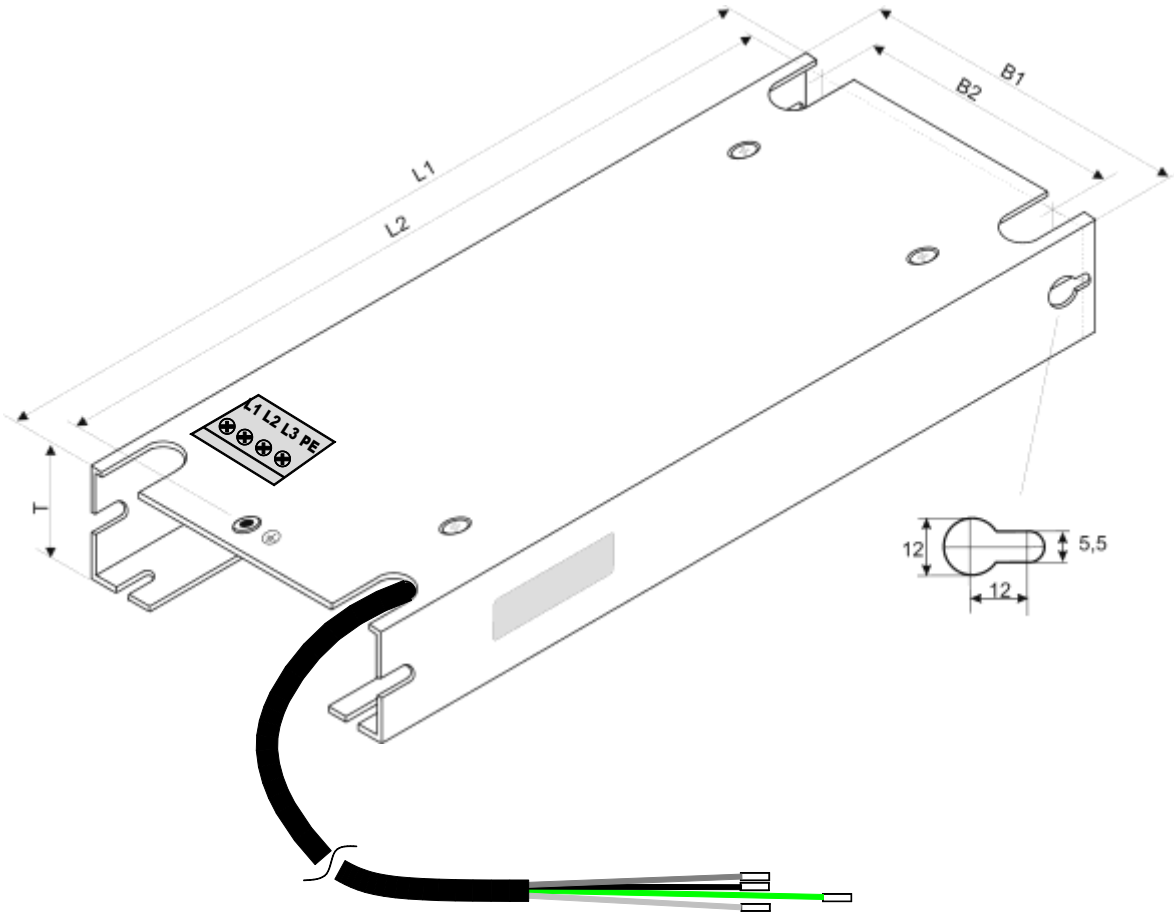

2.4 Chassis line filter (accessory)

In contrast to the line filter described in Chapter 2.3, the HLD 110 (up to 110kW) has a UL acceptance for the North American market.

The interference noise suppression level of **class A** is achieved with up to a maximum motor cable length of 50m, and **class B** with motor cables of up to 25m.

When connecting the line filter, comply with Chapter 2.9 "Wiring guidelines" and 8.3 "EMC". In particular, ensure that the pulse frequency is set to the default value (P504 = 4/6kHz). The line filter should be placed as close to the side of the inverter as possible.

The connection is by means of screw connections on the upper (mains) and lower (inverter) ends of the filter

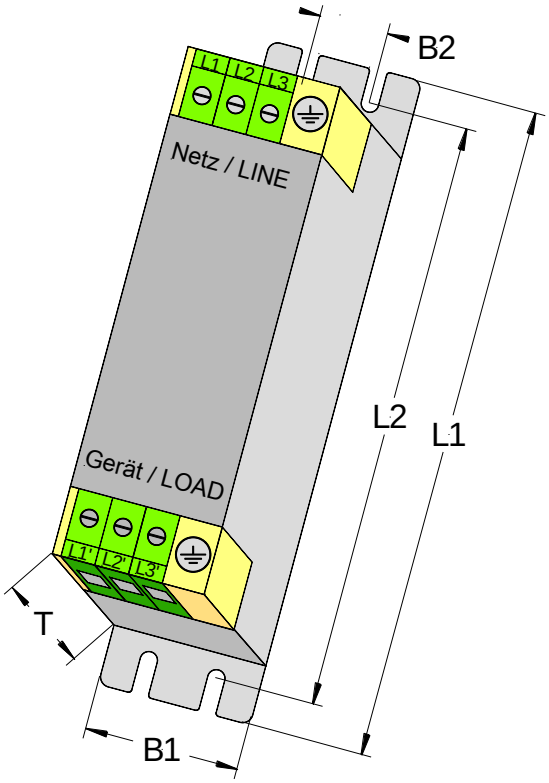

Inverter type **SK 700E ...**	Filter type **HLD 110 - ...** [V] / [A]	Length L1	Width B1	Depth T	Detail: mounting		Connection cross-section
					Length L2	Width B2	
...-151-340-A ...-221-340-A	**... 500/8**	190	45	75	180	20	4 mm^2
...-301-340-A ...-401-340-A ...-551-340-A	**... 500/16**	250	45	75	240	20	4 mm^2
...-751-340-A ...-112-340-A	**... 500/30**	270	55	95	255	30	10 mm^2
...-152-340-A	**... 500/42**	310	55	95	295	30	10 mm^2
...-182-340-A	**... 500/55**	250	85	95	235	60	16 mm^2
...-222-340-A ...-302-340-O	**... 500/75**	270	85	135	255	60	35 mm^2
...-372-340-O	**... 500/100**	270	95	150	255	65	50 mm^2
...-452-340-O ...-552-340-O	**... 500/130**						
...-752-340-O	**... 500/180**	380	130	181	365	102	95 mm^2
...-902-340-O ...-113-340-O	**... 500/250**	450	155	220	435	125	150 mm^2
Design variant, **without UL**, only noise suppression level A							Bus bar
...-133-340-O	**HFD 103-500/300 ***	564	300	160	2 x 210	275	∅ 8.5mm
...-163-340-O	**HFD 103-500/400 ***						∅ 10.5mm
	*) without UL/cUL	All dimensions in mm					

2.5 Line choke (accessories)

To reduce input side current harmonics, additional inductivity can be installed into the line supply to the inverter.

These chokes are specified for a maximum supply voltage of 480V at 50/60 Hz.

The protection class of the chokes is IP00 and they must therefore be installed in a control cabinet.

For frequency inverters with **an output of 45 kW or more**, a line choke is recommended where several devices are being used, in order to avoid possible adverse effects of one device on another. In addition, the charging currents (mains voltage fluctuations) are significantly reduced.

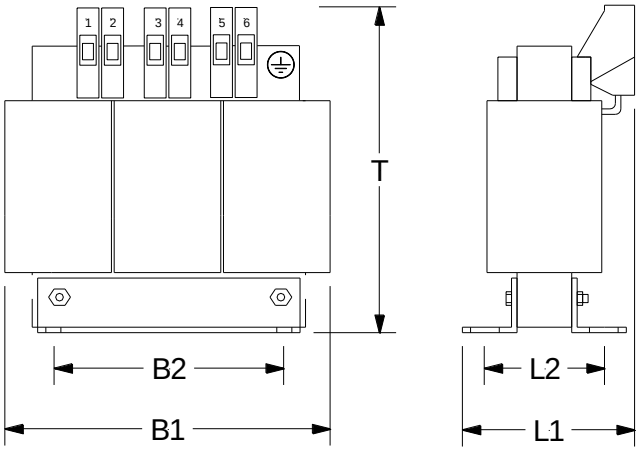

Inverter type NORDAC SK 700E	Input choke 3 x 380 - 480 V			Length L1	Width B1	Depth T	Detail: mounting			Connection
	Type	Permanent current	Inductance				Length L2	Width B2	Mounting	
1.5 ... 2.2 kW	SK CI1-460/6-C	6 A	3 x 4.88 mH	71	125	140	55	100	M4	4
3.0 ... 4.0 kW	SK CI1-460/11-C	11 A	3 x 2.93 mH	84	155	160	56.5	130	M6	4
5.5 ... 7.5 kW	SK CI1-460/20-C	20 A	3 x 1.47 mH	98	190	201	57.5	170	M6	10
11 ... 18.5 kW	SK CI1-460/40-C	40 A	3 x 0.73 mH	118	190	201	77.5	170	M6	10
22 ... 30 kW	SK CI1-460/70-C	70 A	3 x 0.47 mH	124	230	220	98	180	M6	35
37 ... 45 kW	SK CI1-460/100-C	100 A	3 x 0.29 mH	148	230	290	122	180	M6	50
55 ... 75 kW	SK CI1-460/160-C	160 A	3 x 0.18 mH	170	299	360	105	237	M8	95
90 ... 132 kW	SK CI1-460/280-C	280 A	3 x 0.10 mH	190	290	270	133	240	M10	150
160 kW	SK CI1-460/350-C	350 A	3 x 0.084 mH	190	300	270	107	224	M8	CU Bar
All dimensions in [mm]										[mm^2]

2.6 Output choke (accessories)

To reduce interference signals from the motor cable or to compensate for cable capacitance in long motor cables, an additional output choke can be installed into the inverter output.

Take care during installation that the pulse frequency of the frequency inverter is set to 3-6kHz (P504 = 3-6).

These chokes are specified for a maximum supply voltage of 460V at 0-100 Hz.

An output choke should be fitted for cable lengths over 150m/50m (unshielded/shielded). Further details can be found in Chapter 2.10.4 "Motor cable".

The protection class of the chokes is IP00 and they must therefore be installed in a control cabinet.

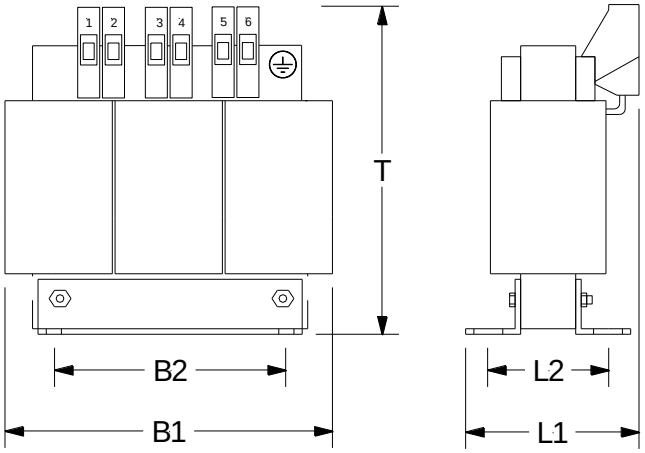

Inverter type NORDAC SK 700E	Output choke 3 x 380 - 480V			Length L1	Width B1	Depth T	Detail: mounting			Connection
	Type	Permanent current	Inductance				Length L2	Width B2	Mounting	
1.5 kW	SK CO1-460/4-C	4 A	3 x 3.5 mH	104	120	140	75	84	M6	4
2.2 ... 4.0 kW	SK CO1-460/9-C	9.5 A	3 x 2.5 mH	110	155	160	71.5	130	M6	4
5.5 ... 7.5 kW	SK CO1-460/17-C	17 A	3 x 1.2 mH	102	185	201	57.5	170	M8	10
11 ... 15 kW	SK CO1-460/33-C	33 A	3 x 0.6 mH	122	185	201	77.5	170	M8	16
18 ... 30 kW	SK CO1-460/60-C	60 A	3 x 0.33 mH	112	185	210	67	170	M8	35
37 ... 45 kW	SK CO1-460/90-C	90 A	3 x 0.22 mH	144	352	325	94	224	M8	35
55 ... 90 kW	SK CO1-460/170-C	170 A	3 x 0.13 mH	200	412	320	125	264	M10	CU bar bolts M12
110 … 132 kW	SK CO1-460/240-C	240 A	3 x 0.07 mH	225	412	320	145	388	M10	CU bar bolts M12
160 kW	SK CO1-460/330-C	330 A	3 x 0.03 mH	188	352	268	145	240	M10	CU bar bolts M16
All dimensions in [mm]										[mm^2]

2.7 UB brake resistors (accessory)

During dynamic braking (frequency reduction) of a three phase motor, electrical energy is returned to the frequency inverter. In order to avoid overcurrent cut-off of the frequency inverter, the integrated brake chopper can convert the returned energy into heat by connecting an external brake resistor.

For inverter outputs up to 7.5 kW, a standard substructure resistor can be fitted; it can also be optionally equipped with a heat monitor for additional thermal protection of the resistor.

This design is no longer possible with higher frequency inverter outputs. Instead, the chassis brake resistors (Chapter 2.8) can be used.

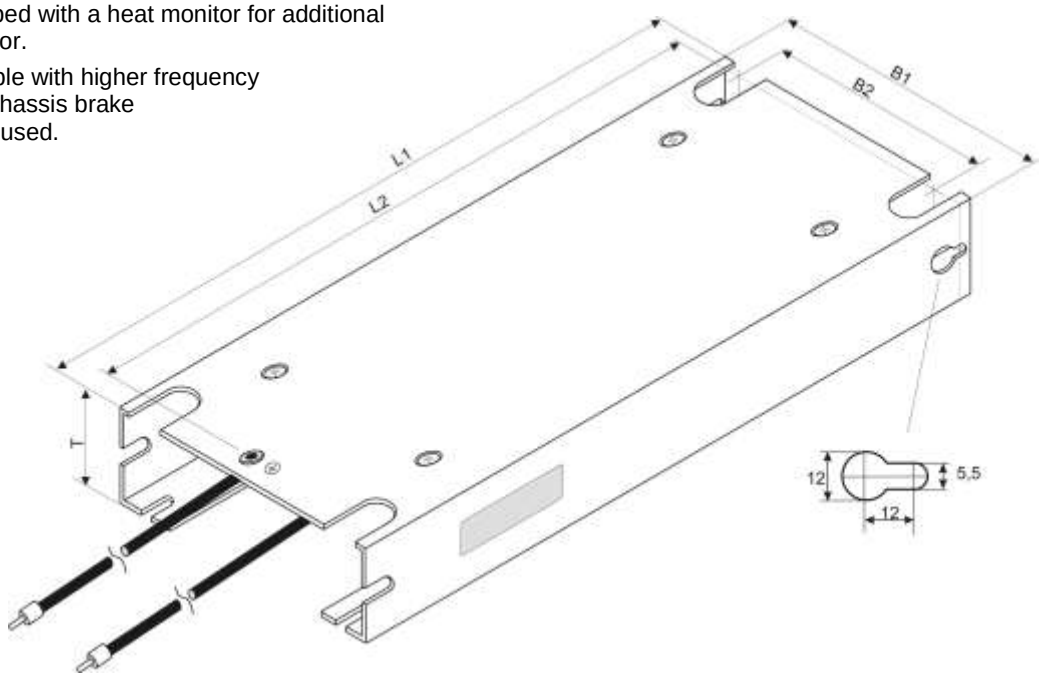

2.7.1 Electrical data UB BR

Inverter type	Resistor type	Resistance	Continuous output (approx.)	*) Pulse output (approx.)	Connection leads, 500mm
SK 700E-151-340-A … SK 700E-301-340-A	**SK BR1-200/300-F**	200 Ω	300 W	3 kW	2 x 0.75 mm^2
SK 700E-401-340-A	**SK BR1-100/400-F**	100 Ω	400 W	4 kW	2 x 0.75 mm^2
SK 700E-551-340-A SK 700E-751-340-A	**SK BR1- 60/600-F**	60 Ω	600 W	7 kW	2 x 0.75 mm^2
*) permissible, depending on application, max. 5% ED					

2.7.2 Dimensions UB BR

Resistor type	Length L1	Width B1	Depth T	Fixing dimensions		
				Length L2	Width B2	∅
SK BR1-200/300-F	281	121	48	269	100	5.2
SK BR1-100/400-F	281	121	48	269	100	5.2
SK BR1- 60/600-F	331	121	48	319	100	5.2
All dimensions in mm						

2.8 Chassis brake resistors (accessory)

During dynamic braking (frequency reduction) of a three phase motor, electrical energy is released and returned to the frequency inverter. To prevent a safety shut-down of the frequency inverter, the integrated brake chopper can be activated by the connection of an external brake resistor.

The returned energy is converted into heat, so avoiding a possible overvoltage.

All chassis resistors are UL certified and are not subject to restrictions in the North American market.

Connection is with screw connectors that are designated +B, -B (1.5-22kW) or BR, +ZW (30-160kW), and the safety leads.

For overload protection, a thermal switch is located close to a brake resistor. The switch is freely available via the screw connectors (2 x 4mm^2). The switching capacity is limited to 250VAC/10A, 125VAC/15A and 30VDC/5A.

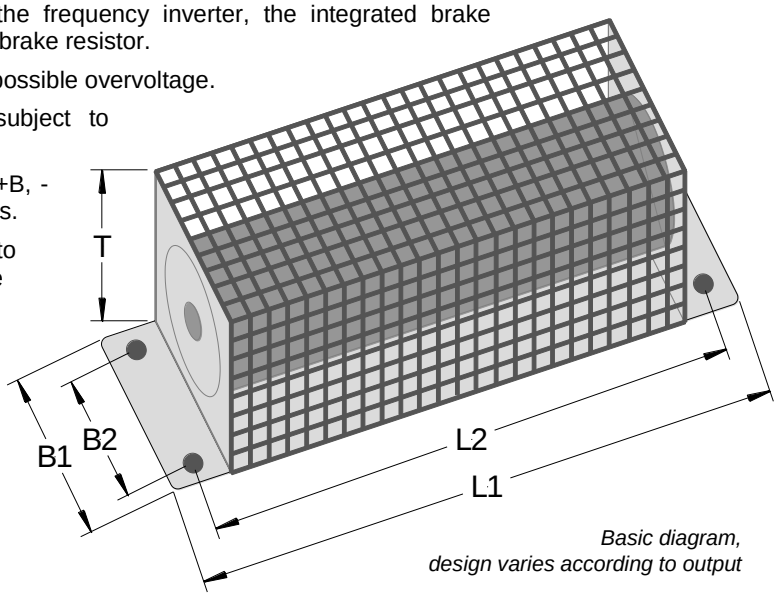

Basic diagram, design varies according to output

2.8.1 Electrical data Chassis BR

Inverter type **NORDAC SK 700E**	**Resistor type**	Resistance	Continuous output (approx.)	*) Pulse output (approx.)	Connection terminals
1.5 ... 2.2 kW	**SK BR2- 200/300-C**	200 Ω	300 W	3 kW	10 mm^2
3.0 ... 4.0 kW	**SK BR2- 100/400-C**	100 Ω	400 W	6 kW	10 mm^2
5.5 ... 7.5 kW	**SK BR2- 60/600-C**	60 Ω	600 W	9 kW	10 mm^2
11 ... 15 kW	**SK BR2- 30/1500-C**	30 Ω	1500 W	20 kW	10 mm^2
18.5 ... 22 kW	**SK BR2- 22/2200-C**	22 Ω	2200 W	28 kW	10 mm^2
30 ... 37 kW	**SK BR2- 12/4000-C**	12 Ω	4000 W	52 kW	10 mm^2
45 ... 55 kW	**SK BR2- 8/6000-C**	8 Ω	6000 W	78 kW	10 mm^2
75 ... 90 kW	**SK BR2- 6/7500-C**	6 Ω	7500 W	104 kW	25 mm^2
110 ... 160 kW	**SK BR2- 3/7500-C**	3 Ω	7500 W	110 kW	25 mm^2
*) permissible, depending on application, max. 5% ED					

2.8.2 Dimensions Chassis BR

Resistor type	Length L1	Width B1	Depth T	Fixing dimensions		
				Length L2	Width B2	∅
SK BR2- 200/300-C	100	170	240	90	150	4.3
SK BR2- 100/400-C						
SK BR2- 60/600-C	350	92	120	325	78	6.5
SK BR2- 30/1500-C	560	185	120	530	150	6.5
SK BR2- 22/2200-C	460	270	120	430	240	6.5
SK BR2- 12/4000-C	560	270	240	530	240	6.5
SK BR2- 8/6000-C	470	600	300	440	2 x 220	6.5
SK BR2- 6/7500-C	570	600	300	540	2 x 220	6.5
SK BR2- 3/7500-C						
All dimensions in mm						

2.9 Wiring guidelines

The frequency inverter has been developed for use in an industrial environment. In this environment, high levels of electromagnetic interference can influence the frequency inverter. In general, correct installation ensures safe and problem-free operation. To meet the limit values of the EMC directives , the following instructions should be complied with.

(1) Ensure that all equipment in the cabinet is securely earthed using short earthing cables that have large cross-sections and which are connected to a common earthing point or earthing bar. It is especially important that every control device connected to the frequency inverters (e.g. an automation device) is connected, using a short cable with large cross-section, to the same earthing point as the inverter itself. Flat conductors (e.g. metal clamps are preferable, as they have a lower impedance at high frequencies.

The PE lead of the motor controlled by the frequency inverter must be connected as directly as possible to the earth connection of the cooling element, together with the PE of the corresponding frequency inverter mains supply. The presence of a central earthing bar in the control cabinet and the grouping together of all PE conductors to this bar normally ensures safe operation. (See also Chapter 8.3/8.4 EMC guidelines)

(2) Where possible, shielded cables should be used for control loops. The shielding at the cable end should be carefully sealed and it must be ensured that the wires are not laid over longer distances without shielding.

The shields of analog setpoint cables should only be earthed on one side on the frequency inverter.

(3) The control cables should be installed as far as possible from power cables, using separate cable ducts, etc. Where cables cross, an angle of 90° should be ensured as far as possible.

(4) Ensure that the contactors in the cabinet are interference protected, either by RC circuits in the case of AC contactors or by free-wheeling diodes for DC contactors, for which **the interference traps must be positioned on the contactor coils**. Varistors for over-voltage limitation are also effective. This interference suppression is particularly important when the contactors are controlled by the relay in the frequency inverter.

(5) Shielded or protected cables should be used for load connections and the shielding/protection should be earthed at both ends, if possible directly to the frequency inverter PE/shield angle.

(6) If the drive is to be used in an area sensitive to electromagnetic interference, then the use of noise suppression filters is recommended to limit the cable-dependent and radiated interference from the inverter. In this case, the filter must be mounted as closely as possible to the frequency inverter and fully earthed.

It is also an advantage if the inverter is installed together with the line filter in an *EMC-proof enclosure*, with *EMC-compliant cabling*. (See also Chapter 8.3/8.4 EMC)

(7) Select the lowest possible switching frequency. This will reduce the intensity of the electromagnetic interference produced by the frequency inverter.

The safety regulations must be complied with under all circumstances when installing the frequency inverter!

Note

The control cables, line cables and motor cables must be laid separately. In no case should they be laid in the same protective pipes/installation ducts.

The test equipment for high voltage insulations must not be used on cables that are connected to the frequency inverter.

2.10 Electrical connections

2.10.1 Line and motor connections

WARNING

THESE DEVICES MUST BE EARTHED.

Safe operation of the devices presupposes that qualified personnel mount and operate it in compliance with the instructions provided in these operating instructions.

In particular, the general and regional mounting and safety regulations for work on high voltage systems (e.g. VDE) must be complied with as must the regulations concerning professional use of tools and the use of personal protection equipment.

Dangerous voltages can be present at the line input and the motor connection terminals even when the inverter is switched off. Always use insulated screwdrivers on these terminal fields.

Ensure that the input voltage source is not live before setting up or changing connections to the unit.

Make sure that the inverter and motor have the correct supply voltage set.

Note: If synchronising devices are connected or several motors are switched in parallel, the frequency inverter must be operated with linear voltage/frequency characteristic curves, P211 = 0 and P212 = 0.

The line, motor, brake resistor and control connections are located on the base of the device. To gain access to the terminals, the device covers (cover and grid) must be removed. The connection terminals are now accessible from the front. All covers must be put back in place before switching on the supply voltage!

In general, the line, motor and brake resistor cables are connected first as their terminals are located on the bottom circuit board. The cable inlet is a slit opening on the base of the device.

Note: when using specific **wiring sleeves**, the maximum connection cross-section can be reduced.

Pay attention to the following:

1. Ensure that the voltage source provides the correct voltage and is suitable for the current required (see Chapter 7 Technical data). Ensure that suitable circuit breakers with the nominal current range are inserted between the voltage source and the inverter.
2. Connect the line voltage directly to the line terminals L_1 - L_2 - L_3 and the earth (PE).
3. A four-core cable must be used to connect the motor. The cable must be connected to the motor terminals U - V - W and the PE.
4. If shielded cables are used, then the cable shield can also be applied to as much surface as possible on the shield support angle.

   Note: The use of shielded cables is essential in order to maintain the specified radio interference suppression level. (See also Chapter 8.4 EMC limit value classes)

2.10.2 Mains connection up to 22kW (PE/L1/L2/L3)

No special safety devices are required on the mains input side for the frequency inverter, just the normal mains protection (see technical data) and a master switch/fuse.

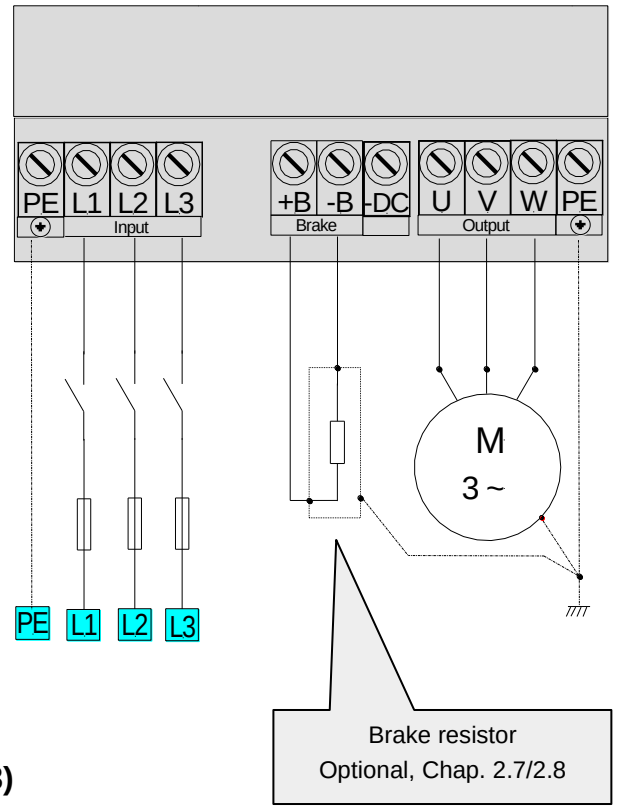

Connection terminals cross-section:

SK 700E-151-340-A **...** SK 700E-751-340-A	VDE UL/cUL	**4mm²** (0.5 … 0.6Nm) (AWG 24-10)
SK 700E-112-340-A **...** SK 700E-152-340-A	VDE UL/cUL	**10mm²** (1.2 … 1.5Nm) (AWG 22-8)
SK 700E-182-340-A **...** SK 700E-222-340-A	VDE UL/cUL	**25mm²** (2.4 … 4.0Nm) (AWG 16-4)

Note: The use of this inverter on an **IT network** is possible after minor alterations. Please consult your supplier.

2.10.3 Mains connection from 30kW (PE/L1/L2/L3)

No special safety devices are required on the mains input side for the frequency inverter, just the normal mains protection (see technical data) and a master switch/fuse.

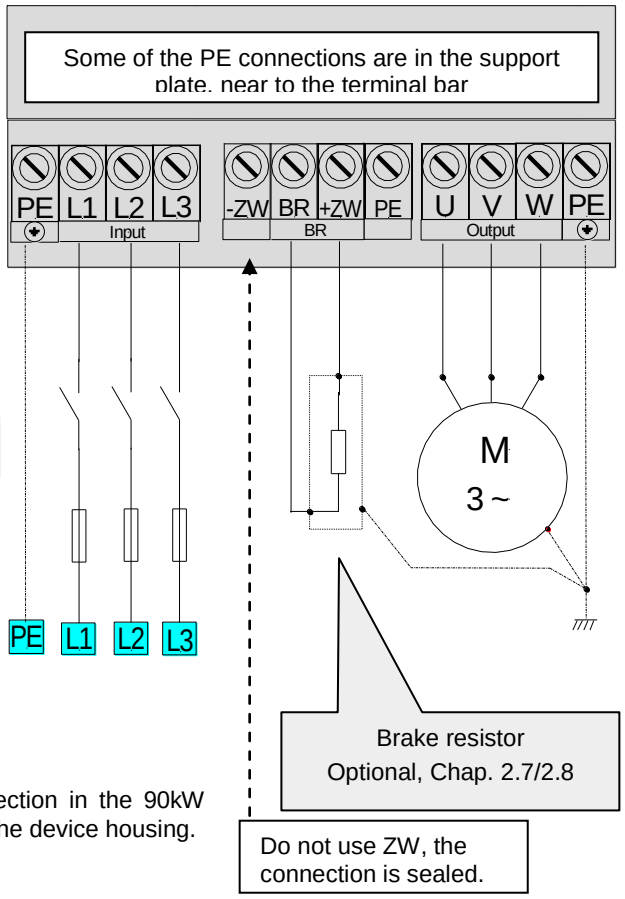

Connection terminals cross-section:

SK 700E-302-340-O ... SK 700E-372-340-O (PE terminals = 16mm²)	VDE UL/cUL	**35mm²** (6 … 8Nm) (AWG 2)
SK 700E-452-340-O **...** SK 700E-552-340-O	VDE UL/cUL	**25-50mm²** (6 … 8Nm) (AWG 4-0)
SK 700E-752-340-O **…** SK 700E-902-340-O	VDE UL/cUL	**95mm²** (15 … 20Nm) (AWG 000)
SK 700E-113-340-O **...** SK 700E-163-340-O (PE terminals = 35-95mm²)	VDE UL/cUL	**50-150mm²** (25 … 30Nm) (AWG 0-300 MCM)

Note: The use of this inverter on an **IT network** is possible after minor alterations. Please consult your supplier.

Note: Only one PE terminal is located near the mains connection in the 90kW device. Further PE connections can be implemented on the device housing.

2.10.4 Motor cable (U/V/W/PE)

The motor cable must have a **maximum length of 150m** (Please note also Chapter 8.4 EMC limit value classes). If a shielded motor cable is used, or the metallic cable duct is well earthed, the **maximum length of 50m** should not be exceeded. For longer cable lengths , additional output chokes must be used.
For multiple motor use, the total cable length consists of the sum of the individual cable lengths. If the sum of the cable lengths is too high, one output choke should be used per motor/cable.

Connection terminals cross-section:

SK 700E-151-340-A ... SK 700E-751-340-A	VDE UL/cUL	**4mm²** (0.5 … 0.6Nm) (AWG 24-10)
SK 700E-112-340-A ... SK 700E-152-340-A	VDE UL/cUL	**10mm²** (1.2 … 1.5Nm) (AWG 22-8)
SK 700E-182-340-A ... SK 700E-222-340-A	VDE UL/cUL	**25mm²** (2.4 … 4.0Nm) (AWG 16-4)
SK 700E-302-340-O ... SK 700E-372-340-O (PE terminals = 16mm^2)	VDE UL/cUL	**35mm²** (3.2 … 3.7Nm) (AWG 2)
SK 700E-452-340-O ... SK 700E-752-340-O (75KW: no PE terminal, screw terminal in the support plate)	VDE UL/cUL	**25-50mm²** (6 … 8Nm) (AWG 4-0)
SK 700E-902-340-O (No PE terminals, screw terminal in the support plate)	VDE UL/cUL	**95mm²** (15 … 20Nm) (AWG 000)
SK 700E-113-340-O ... SK 700E-163-340-O (PE terminals = 35-95mm^2)	VDE UL/cUL	**50-150mm²** (25 … 30Nm) (AWG 0-300 MCM)

2.10.5 Brake chopper connection up to 22kW (+B/-B)

The connection for the frequency inverter → brake resistor should be shielded and as short as possible.

Note: Possible strong heating of the brake resistor should be taken into account.

Connection terminals cross-section:

SK 700E-151-340-A **...** SK 700E-751-340-A	VDE UL/cUL	**4mm²** (0.5 … 0.6Nm) (AWG 24-10)
SK 700E-112-340-A **...** SK 700E-152-340-A	VDE UL/cUL	**10mm²** (1.2 … 1.5Nm) (AWG 22-8)
SK 700E-182-340-A **...** SK 700E-222-340-A	VDE UL/cUL	**25mm²** (2.4 … 4.0Nm) (AWG 16-4)

2.10.6 Brake resistor connection from 30kW (BR+ZW)

The connection for the frequency inverter → brake resistor should be shielded and as short as possible.

Note: Possible strong heating of the brake resistor should be taken into account.

Connection terminals cross-section:

SK 700E-302-340-O **...** SK 700E-372-340-O (add. PE terminals = 16mm^2)	VDE UL/cUL	**16mm²** (3.2 … 3.7Nm) (AWG 6)
SK 700E-452-340-O **...** SK 700E-752-340-O (add. PE terminals = 0.75-35mm^2)	VDE UL/cUL	**0.75-35mm²** (3.2 … 3.7Nm) (AWG 18-2)
SK 700E-752-340-O **...** SK 700E-902-340-O (No PE terminals, screw terminal in the support plate)	VDE UL/cUL	**50mm²** (6 … 8Nm) (AWG 4-0)
SK 700E-113-340-O **...** SK 700E-163-340-O (add. PE terminals = 95mm^2)	VDE UL/cUL	**95mm²**(15 … 20Nm) (AWG 000)

Note: Only one PE terminal is located near the mains connection in the 90kW device. Further PE connections can be implemented on the device housing.

2.10.7 Control unit connection

The manner and type of control unit connections are dependent on the options chosen (customer unit / special extension unit). The possible variations are described in Chapter 3.2/3.3.

On these pages you will find general data and information on all customer units and special extension units.

Connection terminals:	-	Plugs, terminals and connectors can be released with a small screwdriver
Maximum connection cross-section:	-	1.5 mm^2 or 1.0 mm^2, depending on option
Cable:	-	Lay and shield separately from the mains/motor cables
Control voltages:	-	5V for the supply of an incremental encoder
(Short-circuit proof)	-	10V, max. 10mA, reference voltage for an external potentiometer
	-	15V for the supply of the digital inputs or an incremental or absolute encoder
	-	analog output 0 - 10V, max. 5mA for an external display unit

Note: All control voltages are based on a common reference potential (GND).

5 / 15 V can if necessary, be taken from several terminals. The sum of the currents is max. 300 mA.

3 Operation and display

The NORDAC SK 700E basic device is supplied with a blanking cover for the technology unit slot and the basic version has no components for parameterisation or control.

Technology units, customer units and special extension units

Through the combination of modules for the display, **technology units** and modules with digital and analog inputs, as well as interfaces, **customer units** or **special extension units,** the NORDAC SK 700E can be easily adapted to the requirements of various applications.

Technology Units (TU) are modules that can be inserted from above for display, parameterisation and control of the inverter.

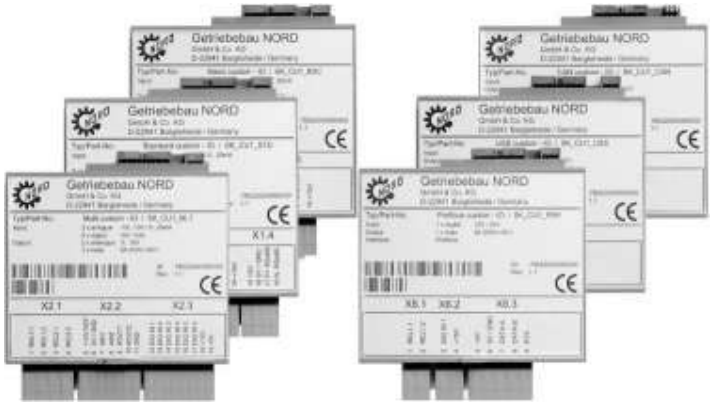

Customer Units (CU) are modules inserted inside the inverter in the upper recess. They are used for control and communication using digital/analog signals or bus interfaces.

Extension Units (XU) are inserted into the slot at the base of the inverter. Such an extension unit is required if the speed is to be controlled or positioned by an incremental (absolute) encoder.

⚠	**WARNING** Modules should not be inserted or removed unless the device is free of voltage. The slots may only be used for the applicable modules. The slots are coded to prevent them being mixed up.

3.1 Technology unit

(**T**echnology **U**nit, Option)

Technology units are snapped onto the inverter externally. They are for the control or parameterisation of the inverter and for the display of current operating settings..

Technology unit (SK TU1-...)	Description	Data
ParameterBox **SK TU1-PAR**	For text-driven initialisation, parameterisation, configuration and control of the frequency inverter. Background illuminated graphic display.	6 languages Storage of 5 data sets Help texts
ControlBox **SK TU1-CTR**	Used for commissioning, parameterisation, configuration and control of the frequency inverter.	4-figure, 7-segment LED display
Potentiometer **SK TU1-POT**	For direct control of the drive from the frequency converter.	Potentiometer 0 to 100% ON / OFF / Reverse button
CANbus module **SK TU1-CAN**	This option enables control of the SK 700E via the CANbus serial port.	Baud rate: 500 KBit/s Connector: Sub-D 9
Profibus module **SK TU1-PBR**	This option enables control of the SK 700E via the Profibus DP serial port.	Baud rate: 1.5 MBaud Connector: Sub-D 9
Profibus module **SK TU1-PBR-24V**	This option enables control of the SK 700E via the Profibus DP serial port. Operation requires an external 24V supply.	Baud rate: 12 MBaud Connector: Sub-D 9 ext. +24V DC supply
RS 232 **SK TU1-RS2**	This option enables control of the SK 700E via the RS 232 serial port, e.g. using a PC.	Connector: Sub-D 9
CANopen module **SK TU1-CAO**	This option enables control of the SK 700E via the CANbus serial port, using the CANopen protocol	Baud rate: up to 1 MBit/s Connector: Sub-D 9
DeviceNet module **SK TU1-DEV**	This option enables control of the SK 700E via the DeviceNet serial port using the DeviceNet protocol.	Baud rate: 500 KBit/s 5-pin screw connector
InterBus module **SK TU1-IBS**	This option enables control of the SK 700E via the InterBus serial port.	Baud rate: 500 kBit/s (2Mbit/s) Connector: 2 x Sub-D 9
AS interface **SK TU3-AS1**	Actuator-sensor interface is a bus system for the lower field bus level, used for simple control tasks.	4 sensors / 2 actuators 5 / 8 pin screw connector

Mounting

The technology units must be **installed** as follows:

1. Switch off the mains voltage, observe the waiting period.
2. Remove the blanking cover by pressing the upper and lower catches.
3. Allow the technology unit to engage audibly by pressing lightly on the installation surface.

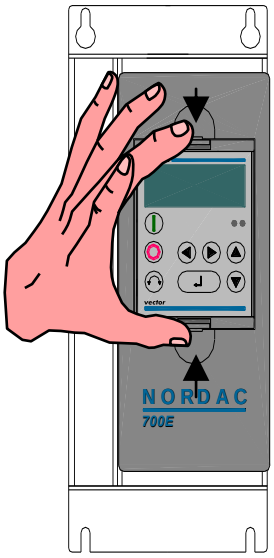

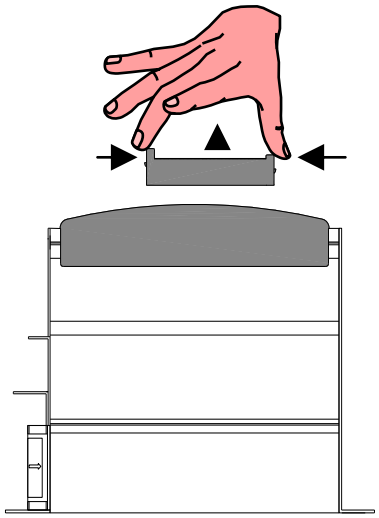

WARNING / NOTE

Modules must not be inserted or removed unless the device is free of voltage. The slots may only be used for the applicable modules.

Installation of a technology unit **separate from** the frequency inverter is not possible. It must be connected directly to the frequency inverter.

3.1.1 ParameterBox

(SK TU1-PAR, Option)

This option is for simple parameterisation and control of the frequency inverter, as well as the display of current operating settings and states.

Up to 5 data sets can be stored and managed in this device.

Features of the ParameterBox

- Illuminated, high resolution LCD graphics screen
- Large-screen display of individual operating parameters
- 6 language display
- Help text for error diagnosis
- 5 complete inverter data sets can be stored in the memory, loaded and processed
- For use as a display for various operating parameters
- Standardisation of individual operating parameters to display specific system data
- Direct control of a frequency inverter

Mounting the ParameterBox

Following the mounting and switch-on of the ParameterBox, an automatic "**Bus scan**" is carried out. The ParameterBox identifies the connected frequency inverter.

In the display that follows, the frequency inverter type and its actual operating status (if released) are displayed.

In the standard display mode, 3 operating values and the actual inverter status can be displayed simultaneously.

The operating values displayed can be selected from a list of 8 possible values (in the >Display< / > Values< menu).

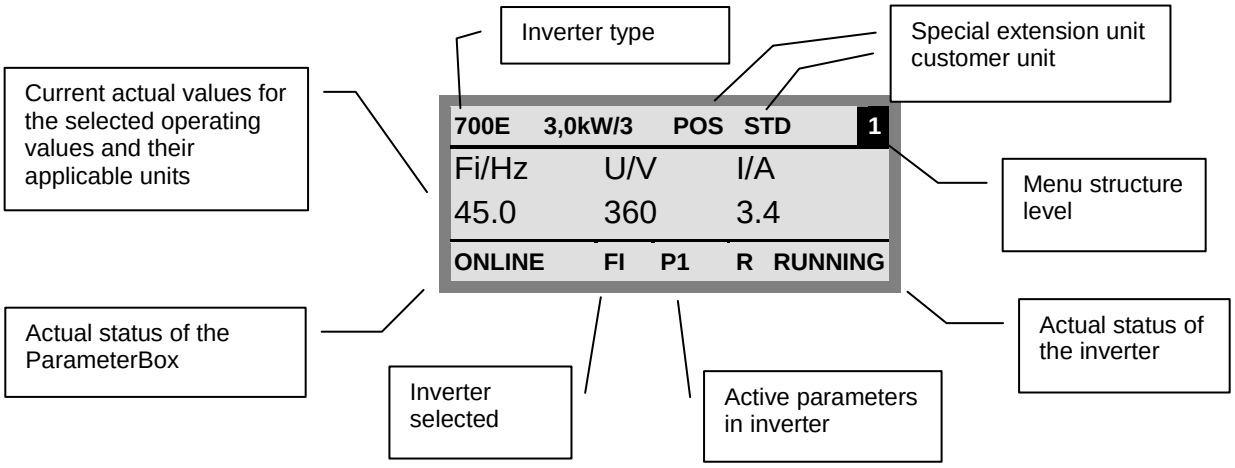

NOTE

The digital frequency setpoint is factory set to 0Hz. To check whether the motor is working, a frequency setpoint must be entered with the ▲ key or a jog frequency via the respective menu level >Parameterization<, >Basic parameters< and the respective parameter >Jog frequency< (P113)

Settings should only be implemented by qualified personnel, strictly in accordance with the warning and safety information.

ATTENTION : The motor may start immediately after pressing the ⏻ START key!

Functions of the ParameterBox

LCD display	Graphic-capable, backlit LCD display for displaying operating values and parameters for the connected inverter and ParameterBox parameters.	
▶ ◀	Using the **SELECTION keys** to toggle between the menu levels and menu items. Press the ◀ and ▶ keys together to go back one level.	
▲ ▼	The contents of individual parameters can be altered with the **VALUES keys.** Press the ▲ and ▼ keys together to load the default values of the parameter selected. When controlling the inverter using the keyboard, the frequency setpoint is set using the VALUE keys.	
↵	Press the **ENTER key** to select a menu group or accept the changed menu item or parameter value. **Note**: If a parameter is to remain, without a new value being stored, then one of the SELECTION keys can be used for the purpose. If the inverter is to be controlled directly from the keyboard (not control terminals), then the actual setpoint frequency can be stored under the Jog Frequency parameter (P113).	
I	**START key** for switching on the frequency inverter.	**Note**: Can only be used if this function has not been blocked in parameter P509 or P540.
O	**STOP key** for switching off the frequency inverter.	
↺	The direction of rotation of the motor changes when the **DIRECTION key** is operated. Rotation direction left is indicated by a minus sign. **Attention!** Take care when operating pumps, screw conveyors, ventilators, etc.	
● **DS** ● **DE**	The LED's indicate the actual status of the ParameterBox. **DS** (ON (green)) The ParameterBox is connected to the power supply and is operational. **DE** (ERROR (red)) An error has occurred while processing data or in the connected frequency inverter.	

Menu structure

The menu structure consists of various levels that are each arranged in a ring structure. The ENTER key moves the menu on to the next level. Simultaneous operation of the SELECTION keys moves the menu back a level.

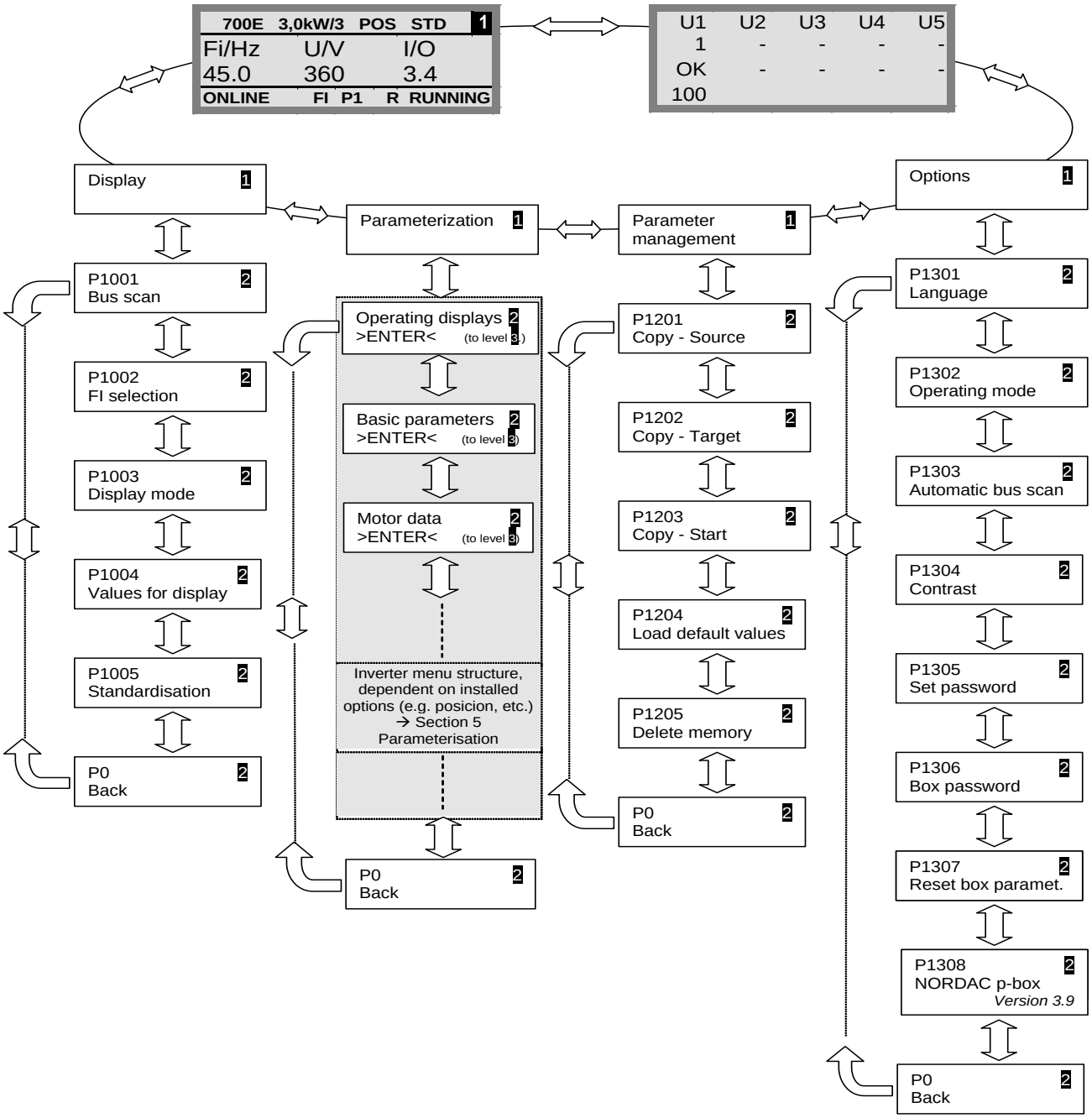

>Display< (P10xx), >Parameter management< (P12xx) and >Options< (P13xx) are purely ParameterBox parameters and have nothing directly to do with the inverter parameters.

Access to the inverter menu structure is gained via the >Parameterisation< menu. The details depend upon the customer units (SK CU1-...) and/or special extension units (SK XU1-...) connected to the inverter. The description of parameterisation begins in Chapter 5.

Language selection, *Summary*

The following steps must be carried out to change the language used in the ParameterBox display.

The default setting is "German". After the mains supply is switched on, the following displays should appear (varies depending upon output and options).

Initial display

700E 3,0kW/3 POS STD 1
> NORDAC <
Frequenzumrichter
ONLINE FU P1 ESperre

Use the **Selection keys** ◀ or ▶, to scroll to the "**Optionen**" menu

1
Optionen
>ENTER<
ONLINE FU P1 ESperre

then press **>ENTER<** ↵

P1301 2
Sprache
Deutsch ...
ONLINE FU P1 ESperre

Using the **Values** key ▲, select the "**Sprache**"

... English
... Français
... Espanol
... Sverige
... Nederlands

Nach Auswahl **>ENTER<** ↵ betätigen

P1301 2
Language
English (e.g.)
ONLINE FI P1 Locked

Press the **SELECTION** keys ◀ and ▶ simultaneously

1
Options
>ENTER<
ONLINE FI P1 Locked

Press the **SELECTION** keys ◀ and ▶ simultaneously

700E 3,0kW/3 POS STD 1
> NORDAC <
Frequency Inverter
ONLINE FI P1 Locked

Controlling the frequency inverter with the ParameterBox

The frequency inverter can only be completely controlled via the ParameterBox if the parameter >Interface< (P509) is set to the >Keyboard< function (0 or 1) (the factory setting of the NORDAC SK 700E) and the inverter is not enabled via the control terminal.

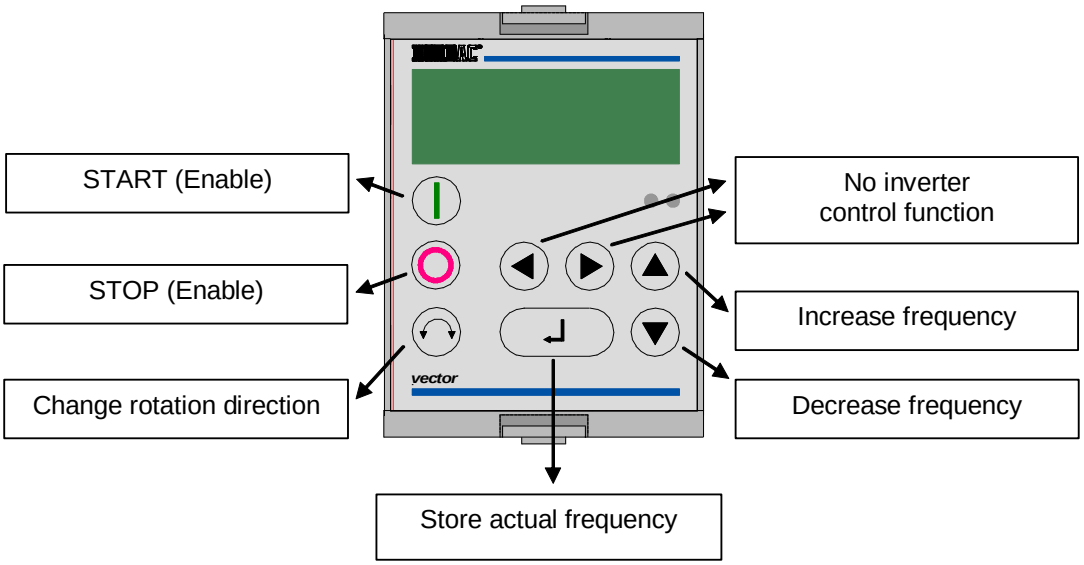

Note: If the inverter is enabled in this mode, then the parameter set to be used can be selected for this inverter in the menu: >Parameterisation< ...>Basic Parameter< in the parameter >Parameter Set<.

If the parameter set has to be changed during operation, then the new parameter set must be selected in this parameter and activated using the I keys.

Attention: After the START command, the inverter can start immediately or with a pre-programmed frequency (minimum frequency P104 or jog frequency P113).

Parameterising with the ParameterBox

The parameter mode accessed is the one selected at menu item >Parameterisation< at Level 1 of the Parameter Box. The parameter level of the connected inverter is accessed using the ENTER key.

The diagram below shows how the ParameterBox control elements are used for parameterisation.

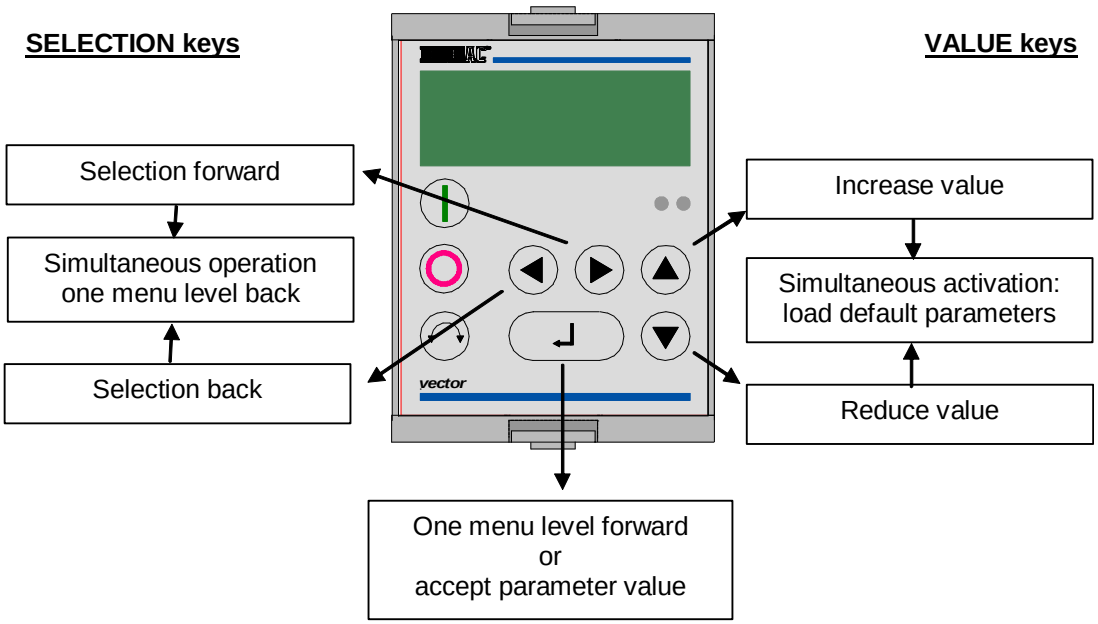

Screen layout during parameterisation

If the setting of a parameter is changed, then the value flashes intermittently until confirmed with the ENTER key. In order to retain the factory settings for the parameter being edited, both VALUE keys must be operated simultaneously. Even in this case, the setting must be confirmed with the ENTER key for the change to be stored.

If the change is not to be stored, then pressing one of the SELECTION keys will cal up the previously stored value. Further operation of a VALUE key leaves this parameter.

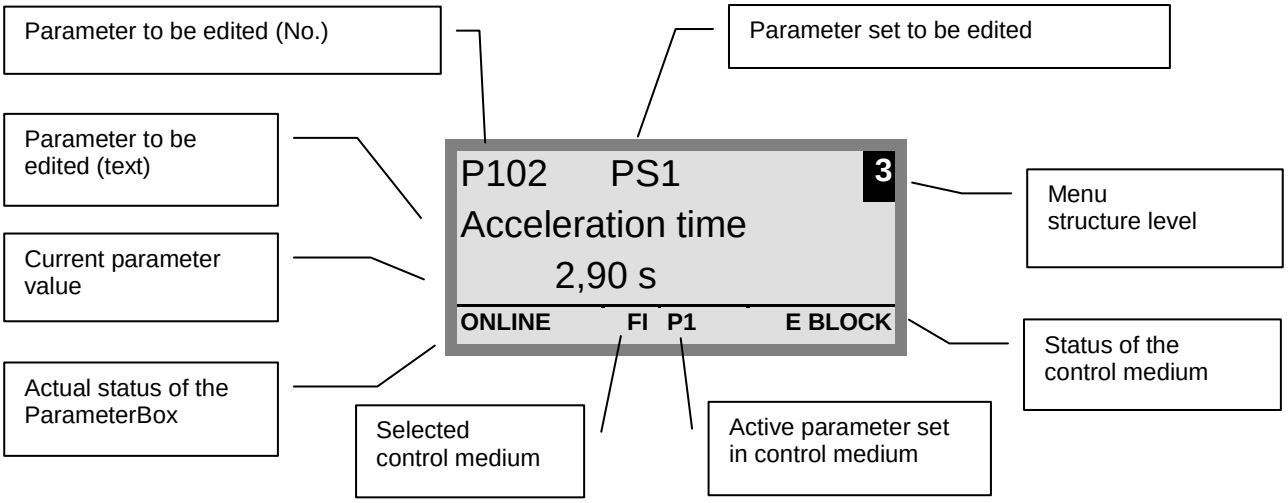

Note: The lowest line in the display is used to display the current status of the box and the frequency inverter being controlled.

3.1.1.1 ParameterBox parameters

The following main functions are assigned to the menu groups:

Menu group	No.	Master function
Display	**(P10xx):**	Selection of operating values and display layout
Parameterisation	**(P11xx):**	Programming of the connected inverter and all storage media
Parameter management	**(P12xx):**	Copying and storage of complete parameter sets from storage media and inverters
Options	**(P14xx):**	Setting the functions of the ParameterBox, as well as all automatic processes

Parameter display

Parameter	Setting value / Description / Note
P1001 Bus scan	A bus scan is initiated with this parameter. During this process a progress indicator is shown in the display. After a bus scan, the parameter is "Off". Depending on the result of this process, the ParameterBox goes into the "ONLINE" or "OFFLINE" operating status.
P1002 Inverter select	Selection of the current item to be parameterised/controlled. The display and further operating actions refer to the item selected. In the inverter selection list, only those devices detected during the bus scan are shown. The actual object appears in the status line. Value range: FI, S1 ... S5
P1003 Display mode	Selection of the operating values display for the ParameterBox Standard — Any 3 values next to each other List — Any 3 values with units below each other Large display — 1 value (any) with unit
P1004 Values to display	Selection of a display value for the actual value display of the ParameterBox. The value selected is placed in the first position of an internal list for the display value and is then also used in the Large Display mode. Possible actual values for the display: Speed of rotation, Link voltage, Setpoint frequency, Torque current, Speed of rotation, Current, Voltage, Actual frequency

Parameter	Setting value / Description / Note
P1005 Scaling factor	The first value on the list displayed is scaled using the standardisation factor. If this standardisation factor varies from a value of 1.00, then the units of the scaled value are hidden in the display. Value range: -327.67 to +327.67; resolution 0.01

Parameterisation

Parameter	Setting value / Description / Note
P1101 Object selection	Selection of the item to be parameterised. The ongoing parameterisation process relates to the object selected. Only the devices and storage objects detected during the bus scan are displayed in the selection list. Value range: FI, S1 ... S5

Parameter administration

Parameter	Setting value / Description / Note
P1201 Copy - Source	Selection of the actual source object to be copied. In the selection list, only the frequency inverters and storage media detected during the bus scan are shown. Value range: FI, S1 ... S5
P1202 Copy - Destination	Selection of actual target object to copy. In the selection list, only the frequency inverters and storage media detected during the bus scan are shown. Value range: FI, S1 ... S5
P1203 Copy - Start	This parameter triggers a transfer process, whereby all the parameters selected in >Copy – Source< are transferred to the object specified in the >Copy – Target< parameter. While data is being overwritten, an information window appears with acknowledgement. The transfer starts after acknowledgement.
P1204 Load default values	In this parameter, the default settings are written to the parameters of the selected item. This function is particularly important when editing storage objects. It is only via this parameter that a hypothetical inverter can be loaded and processed with the ParameterBox. Value range: FI, S1 ... S5
P1205 Clear memory	In this parameter the data in the selected storage medium is deleted. Value range: S1 ... S5

Options

Parameter	Setting value / Description / Note
P1301 Language	Selection of languages for operation of the ParameterBox Available languages: German, English, Dutch, French, Spanish, Swedish
P1302 Operating mode	Selection of the operating mode for the ParameterBox **Offline**: The ParameterBox is operated autonomously. The data set of the frequency inverter is not accessed. The storage objects of the ParameterBox can be parameterised and administrated. **Online**: A frequency inverter is located at the interface of the ParameterBox. The frequency inverter can be parameterised and controlled. When changing to the “ONLINE” operating mode, a bus scan is started automatically. PC slave: Only possible with the *p-box* or SK PAR-.. ParameterBox.
P1303 Auto-bus-scan	Setting the switch-on characteristics. **Off** No bus scan is carried out; the frequency inverters connected before disconnection are sought when switched on again. **On** A bus scan is carried out automatically when the Parameter Box is switched on.

Parameter	Setting value / Description / Note
P1304 Contrast	Contrast setting of the ParameterBox display Value range: 0% ... 100%; Resolution 1%
P1305 Set password	The user can set up a password in this parameter. If a value other than 0 has been entered in this parameter, then the settings of the ParameterBox or the parameters of the connected inverter cannot be altered.
P1306 Box password	If the Password function is to be reset, the password selected in the >Set Password< parameter must be entered here. If the correct password has been selected, than all functions of the ParameterBox can be used again.
P1307 Reset Box parameter	In this parameter the ParameterBox can be reset to the default setting. All ParameterBox settings and the data in the storage media will be deleted.
P1308 NORDAC p-box	Displays the software version of the ParameterBox (NORDAC *p-box*). Please keep for future use.

3.1.1.2 ParameterBox error messages

Display Error	Cause • **Remedy**
Communication error	
200 INCORRECT PARAMETER NUMBER	These error messages are due to EMC interferences or differing software versions of the subscribers. • Check the software version of the ParameterBox and that of the connected frequency inverter. • Check the cabling of all components, regarding possible EMC interference
201 PARAMETER VALUE CANNOT BE CHANGED	
202 PARAMETER OUTSIDE VALUE RANGE	
203 FAULTY SUB INDEX	
204 NO ARRAY PARAMETERS	
205 WRONG PARAMETER TYPE	
206 INCORRECT RESPONSE RECOGNITION USS INTERFACE	
207 USS INTERFACE CHECKSUM FAULT	Communication between inverter and ParameterBox is disrupted (EMC), safe operation cannot be guaranteed. • Check the connection to the frequency inverter. Use a shielded cable between the devices. Route the BUS leads separately from the motor cables.
208 FAULTY STATUS RECOGNITION USS INTERFACE	Communication between inverter and ParameterBox is disrupted (EMC), safe operation cannot be guaranteed. • Check the connection to the frequency inverter. Use a shielded cable between the devices. Route the BUS leads separately from the motor cables.
209_1 INVERTER DOES NOT RESPOND	The ParameterBox is waiting for a response from the connected frequency inverter. The waiting time has elapsed without a response being received. • Check the connection to the frequency inverter. The settings of the USS parameters for the frequency inverter were changed during operation.

Display Error	Cause • Remedy
Identification error	
220 UNRECOGNISED DEVICE	Device ID not found. The connected inverter is not listed in the database of the ParameterBox; no communication can be established. • Please contact your Getriebebau Nord dealership.
221 SOFTWARE VERSION NOT RECOGNISED	Software version not found. The software of the connected inverter is not listed in the ParameterBox database, no communication can be set up. • Please contact your Getriebebau Nord dealership.
222 CONFIGURATION STAGE NOT RECOGNISED	An unknown component has been detected in the frequency inverter (Customer unit / Special extension unit). • Please check the components installed in the frequency inverter • If necessary check the software version of the ParameterBox and the frequency inverter.
223 BUS CONFIGURATION HAS CHANGED	A different device to that saved responds when the last bus configuration is restored. This error can only occur if the parameter >Auto. Bus Scan< is set to OFF and another device has been connected to the ParameterBox. • Activate the Automatic Bus Scan function.
224 DEVICE NOT SUPPORTED	The inverter type entered in the ParameterBox is not supported! • The ParameterBox cannot be used with this inverter.
225 THE CONNECTION TO THE INVERTER IS BLOCKED	Access to a device that is not online (previously Time Out error). • Carry out a bus scan via the parameter **>Bus Scan<** (P1001).
ParameterBox operating error	
226 SOURCE AND TARGET ARE DIFFERENT DEVICES	Copying objects of different types (from / to different inverters) is not possible.
227 SOURCE IS EMPTY	Copying of data from a deleted (empty) storage medium
228 THIS COMBINATION IS NOT PERMITTED	Target and source for the copying function are the same. The command cannot be carried out.
229 THE SELECTED ITEM IS EMPTY	Parameterisation attempt of a deleted storage medium
230 DIFFERENT SOFTWARE VERSIONS	Warning Copying objects with different software versions can lead to problems when transferring parameters.
231 INVALID PASSWORD	Attempt to alter a parameter without a valid Box password being entered in parameter >Box Password< P 1306.
232 BUS SCAN ONLY WHEN IN ONLINE MODE ONLINE	A bus scan (search for a connected frequency inverter) is only possible when in ONLINE mode.

Display Error	Cause • Remedy
Warnings	
240 OVERWRITE DATA? → YES NO	These warnings indicate that there is a possibly significant change which needs additional confirmation. Once the next procedure has been selected, it must be confirmed with the "ENTER" key.
241 DELETE DATA? → YES NO	
242 MOVE SW VERSION? → CONTINUE CANCEL	
243 MOVE SERIES? → CONTINUE CANCEL	
244 DELETE ALL DATA? → YES NO	
Inverter control error	
250 THIS FUNCTION IS NOT ENABLED	The function requested is not enabled at the frequency inverter parameter interface. • Change the value of the parameter >Interface< of the connected inverter to the required function. More detailed information can be obtained from the operating instructions for the frequency inverter.
251 CONTROL COMMAND WAS NOT SUCCESSFUL	The control command could not be implemented by the inverter, as a higher priority function, e.g. Emergency Stop or an OFF signal to the control terminals of the inverter, is present
252 CONTROL OFFLINE NOT POSSIBLE	Call up of a control function in Offline mode. • Change the operating mode of the p-box in the parameter >Operating Mode< P1302 to Online and repeat the action.
253 ERROR ACKNOWLEDGEMENT NOT SUCCESSFUL	The acknowledgement of an error at the frequency inverter was not successful, the error message remains.
Error message from inverter	
"ERROR No. FROM INVERTER" INVERTER FAULT "INVERTER FAULT TEXT"	An error has occurred at the frequency inverter with the displayed number. The inverter error number and text are displayed.

3.1.2 ControlBox

(SK TU1-CTR, Option)

This option is used for the parameterisation and control of the frequency inverter.

Features

- 4-figure, 7 segment LED display
- Direct control of a frequency inverter
- Display of the active parameter set.
- Storage of a complete frequency inverter parameter set (P550)

After mounting of the ControlBox and the switching on of the mains supply, horizontal dashes are displayed in the 4 figures of the 7 segment display. This display shows the operational readiness of the frequency inverter.

If the inverter is switched to enable, the display changes automatically to the operating value selected in parameter >Selection Display value< P001(default setting = actual frequency).

The actual parameter set is shown by the 2 LEDs next to the display on the left in binary code.

NOTE

The digital frequency setpoint is factory set to 0Hz. To check whether the motor is working, a frequency setpoint must be entered with the key or a jog frequency via the respective parameter >Jog frequency< (P113).

Settings should only be implemented by qualified personnel, strictly in accordance with the warning and safety information.

ATTENTION : The motor may start immediately after pressing the START key!

ControlBox functions:

	Press to switch on the frequency inverter. The frequency inverter is now enabled with the set jog frequency (P113). A preset minimum frequency (P104) may at least be provided. Parameter >Interface< P509 must = 0.
	Press to switch off the frequency inverter. The output frequency is reduced to the absolute minimum frequency (P505) and the frequency inverter shuts down at the output side.
7-segment LED display	Shows the current operating value set during operation (selection in P001) or an error code. During parameterisation, the parameter numbers or the parameter values are shown.
LEDs 1 2	The LEDs indicate the actual operating parameter set in the operating display (P000) and the actual parameter set being parameterised during parameterisation. Tin this case the display is coded in binary form. 1, 2 = P1 1, 2 = P2 1, 2 = P3 1, 2 = P4
	The motor rotation direction changes when this key is pressed. "Rotation to the left" is indicated by a minus sign. **Attention!** Take care when operating pumps. screw conveyors, ventilators, etc. Block the key with parameter P540.
	Press the key to INCREASE the frequency. During parameterisation, the parameter number or parameter value is increased
	Press the key to REDUCE the frequency. During parameterisation, the parameter number or parameter value is reduced.
	Press "ENTER" to store an altered parameter value, or to switch between parameter number or parameter value. **NOTE**: If a changed value is not to be stored, the key can be used to exit the parameter without storing the change.

Controlling the frequency inverter with the ControlBox

The inverter can only be controlled via the ControlBox, if it has not previously been enabled via the control terminals or via a serial interface (P509 = 0).

If the "START" key is pressed, the inverter in the operating display changes (selection P001).

The frequency inverter supplies 0Hz or a minimum frequency (P104) or jog frequency (P113) that has been set at a higher level.

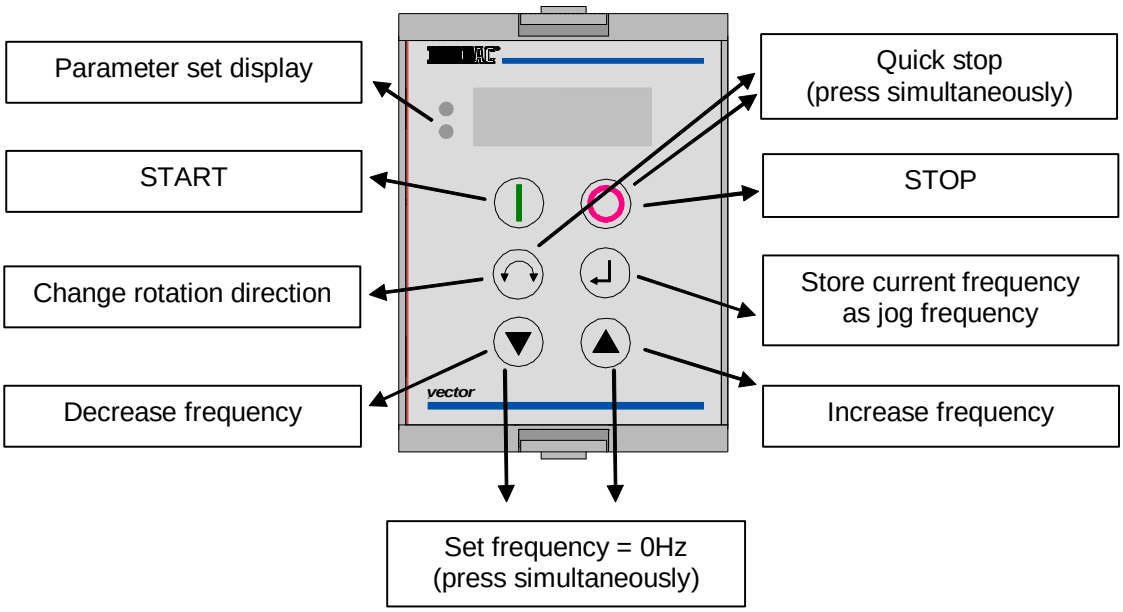

Parameter set display:

The LEDs indicate the actual operating parameter set in the operating display (P000) and the current parameter set being parameterised (≠ P000). There, the display appears in binary form.

The parameter set can also be changed during operation via the parameter P100 (control via ControlBox).

Frequency setpoint:

The current frequency setpoint depends on the setting in the parameters jog frequency (P113) and minimum frequency (P104).

This value can be altered during keyboard operation with the value keys and and permanently stored in P113 as the jog frequency by pressing the ENTER key.

Quick stop:

By simultaneously pressing the STOP key and the "Change direction key", an quick stop can be initiated.

Parameterisation with the ControlBox

The **parameterisation** of the frequency inverter can be performed in the various operating states. All parameters can always be changed online. Switching to the parameter mode occurs in different ways depending upon the operating states and the enabling source.

1. If there is no enable (if necessary, press the STOP key) via the ControlBox, control terminals or a serial interface, it is still possible to switch to the parameterisation mode directly from the operating value display with the value keys or . → P0__ / P 7 __

2. If an enable is present via the control terminals or a serial interface and the inverter is producing an output frequency, it is also possible to switch to the parameterisation mode directly from the operating value display using the value keys or . → P 0 __ / P7__

3. If the inverter is enabled via the ControlBox (START key), the parameterisation mode can be reached by pressing the START and ENTER keys + simultaneously.

4. Switching back to the control mode is achieved by pressing the START key .

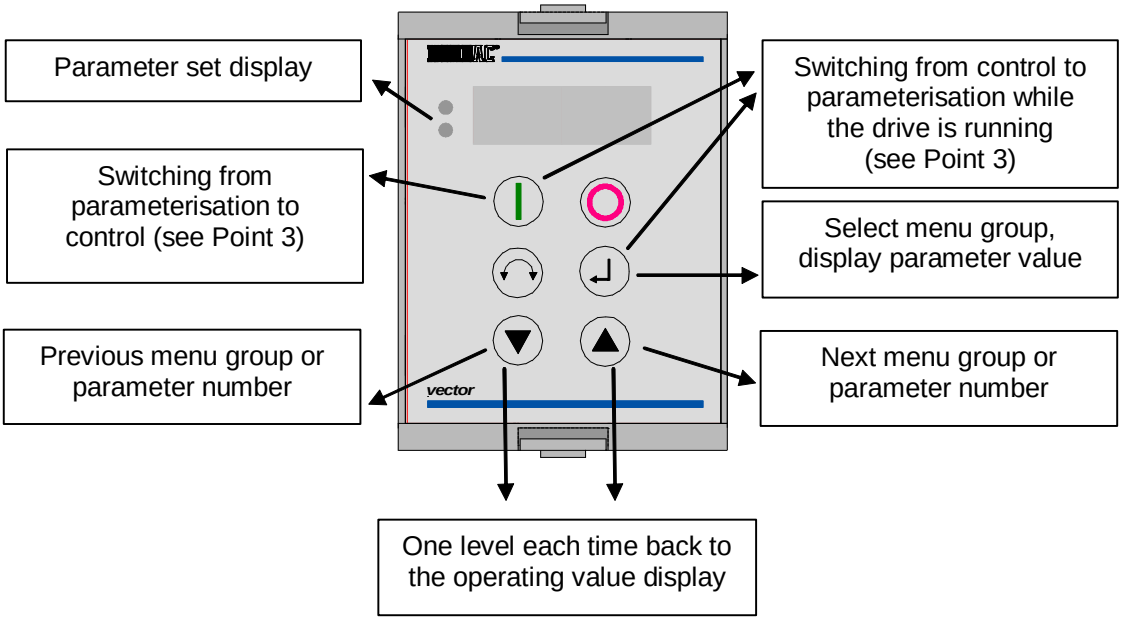

Parameterisation of the frequency inverter

To access the parameter section, one of the value keys, or must be pressed. The display changes to the menu group display P0__ ... P7__. Once the required menu group has been reached, the ENTER key must be pressed to access the individual parameters.

All parameters are arranged in order in the individual menu groups in a continuous scroll pattern. It is therefore possible to scroll forwards and backwards within this section.

Each parameter has a parameter number → Pxxx. The significance and description of the parameters starts in Chapter 5 "Parameterisation"

Note: The parameters P542, P701 to 706, P707, P718, P741/742 and P745/746 also have an array level in which further settings can be made, e.g.:

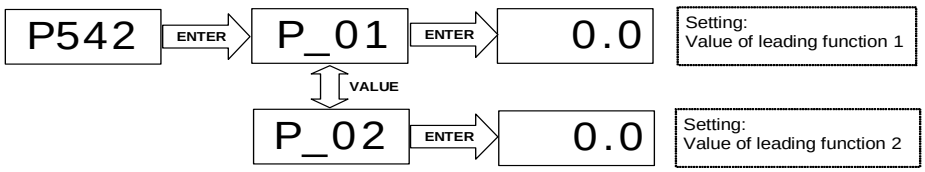

Menu structure with the SimpleBox

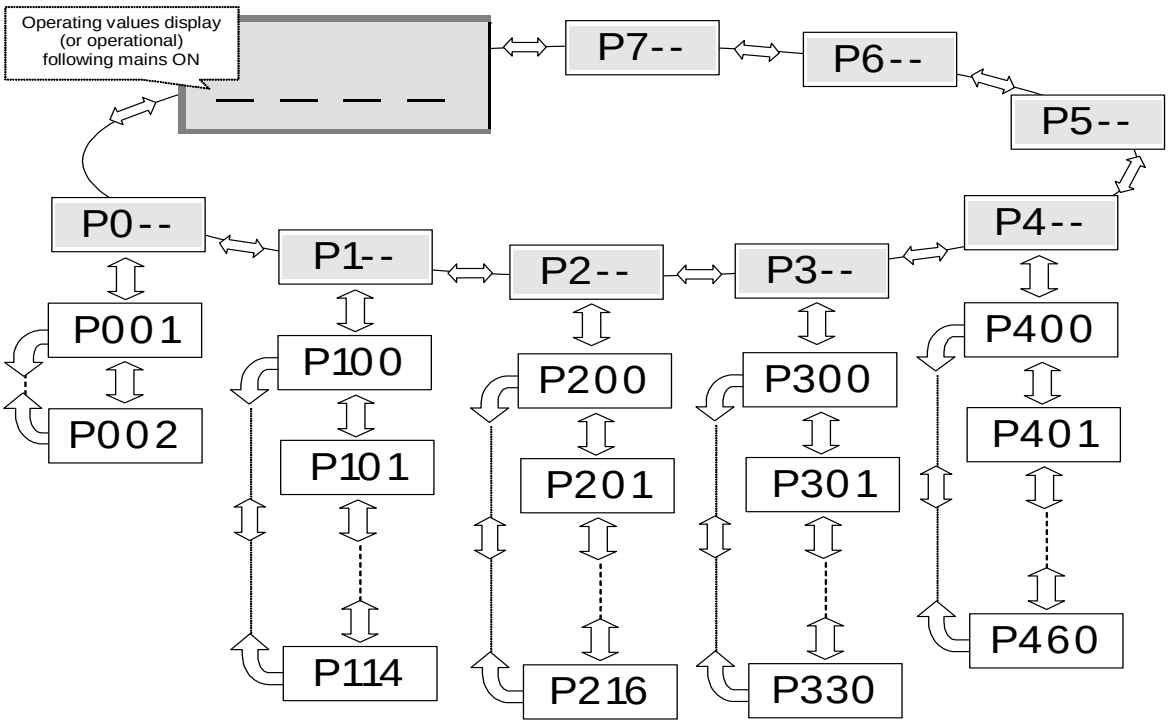

To **change a parameter value**, the ENTER key must be pressed when the applicable parameter number is displayed.

Changes can then be made using the VALUE keys or and must be confirmed with to save them and leave the parameter.

As long as a changed value has not been confirmed by pressing ENTER, the value display will flash; this value has not yet been stored in the frequency inverter.

During parameter changes, the display does not blink so that the display is more legible.

If a change is <u>not</u> to be saved, the "DIRECTION" key can be pressed to leave the parameter.

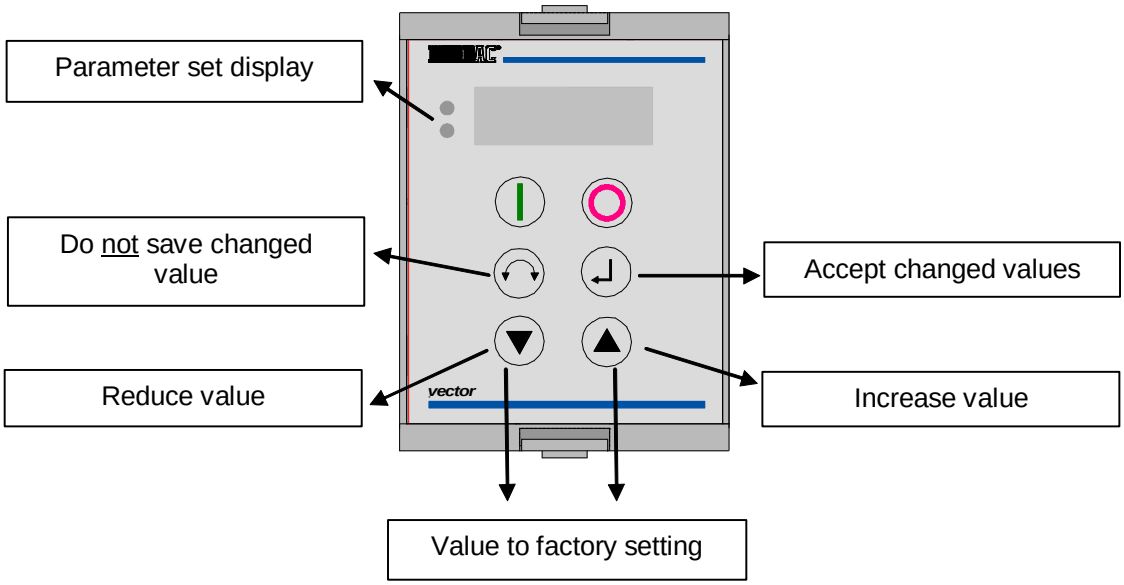

3.1.3 PotentiometerBox

(SK TU1-POT, Option)

The PotentiometerBox can be used as a control unit for various functions. Selection can be carried out in parameter P549.

In the basic setting direct control of the output frequency within the minimum (P104 =0 Hz) and maximum frequency (P105 = 50 Hz) range is possible.

Note: The frequency inverter can then only be controlled via the PotentiometerBox, when the parameter >Interface< is programmed for the control terminals or keyboard (P509 = 0) and if it has not previously been enabled via the control terminals.

Control (with P549 = 1):

I	To switch on the frequency inverter, the START key I must be pressed. The frequency inverter is now enabled with the actual potentiometer setting. Any previously set minimum frequency (P104) is the minimum supplied.
O	To switch off the frequency inverter, the STOP key O must be pressed. The output frequency is reduced by the brake ramp (P103) until standstill.

Change of rotation direction: When the inverter is enabled, the direction of rotation can be changed by long pressing (approx. 3s) of the START key I.

If the frequency inverter has not been enabled, the rotation direction with which the motor should be started can be changed by a long press of the STOP key O.

Frequency setpoint:

A setpoint between the minimum frequency (P104) and the maximum frequency (P105) can be set with the potentiometer.

Error acknowledgement: If an inactive error of the frequency inverter is present (red LED flashing), it can be acknowledged by pressing the STOP key O

LED display:

Red LED	off		No error
	flashing		Inactive error
	on		Active error
Green LED	off		Frequency inverter switched off, enabled with rotation direction to the right
	flashing 1: short on, long off		Frequency inverter switched off, enabled with rotation direction to the left
	flashing 2: short on, short off		Frequency inverter switched on, with rotation direction to the left
	on		Frequency inverter switched on, with rotation direction to the right

3.1.4 RS 232 Box (SK TU1-RS2)

The RS 232 technology unit enables simple connection (cable: RS 232, P. No. 78910030) from a NORDAC SK 700E to a PC with serial interface.

Communication between PC and frequency inverter can be achieved using the NORD CON Software (Windows).

Note: When using a standard I/O (SK CU1-STD Chap. 3.2.2), the RS485 termination resistor should be switched off to prevent possible communication problems.

The connected inverter can be controlled and parameterised via this interface. This allows a simple functional test of the inverter to be implemented and, following successful parameterisation, the data set can be saved as a file.

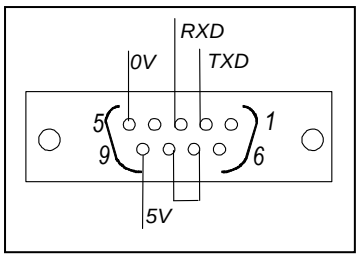

Status LEDs	TxD (green)	Data traffic on the send cable	
	RxD (green)	Data traffic on the receive cable	

3.1.5 CANbus module (SK TU1-CAN)

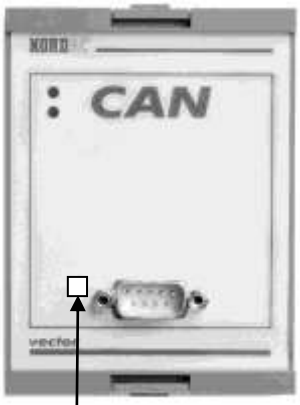

The CANbus interface on the NORDAC frequency inverter enables parameterisation and control of the device as per the CAN specifications 2.0A and 2.0B. Up to 512 participants can be addressed on a single Bus. A termination resistor is integrated and can be switched on.

The transfer rate can be set between 10kBaud and 500kBaud.

The collision and error recognition integrated in the CANbus protocol enables maximum bus usage and data security.

Detailed information can be found in the operating instructions **BU 0060,** or contact the supplier of the frequency inverter.

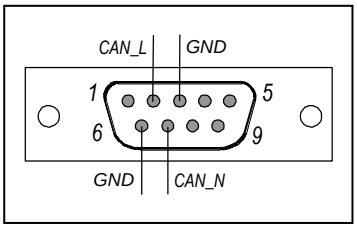

Status LEDs	CAN_TxD (green)	Data traffic on the send cable	
	CAN_RxD (green)	Data traffic on the receive cable	

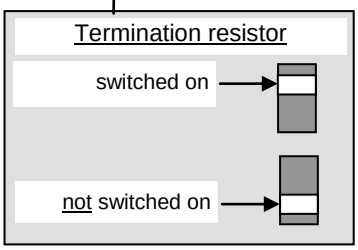

3.1.6 Profibus module (SK TU1-PBR)

A large number of different automation devices can exchange data using Profibus. PLC's, PC's, operating and monitoring devices can all communicate via a uniform bus in serial bit mode.

Data exchange is specified in DIN 19245 Part 1 and 2 and application-specific upgrades in Part 3 of this standard. Within the European field bus standardisation process, Profibus is integrated into the European field bus standard pr EN 50170.

The termination resistor for the last bus participant is located in the Profibus standard plug.

Detailed information can be found in the operating instructions **BU 0020** or contact the supplier of the frequency inverter.

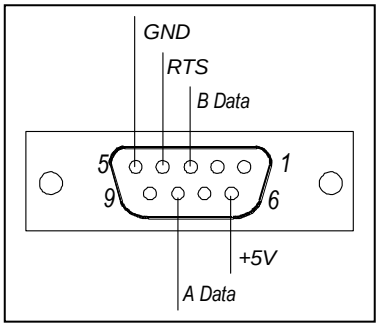

Status LEDs	BR (green)	**B**us **R**eady, normal operation, cyclical data transmission	
	BE (red)	**B**us **E**rror, interrupted data traffic, details in BU 0020	

3.1.7 Profibus 24V module (SK TU1-PBR-24V)

Profibus allows numerous different automation devices to exchange data. PLC's, PC's, operating and monitoring devices can all communicate via a uniform bus in serial bit mode. This Profibus option is supplied via an external 24V DC ±25% connection with voltage.

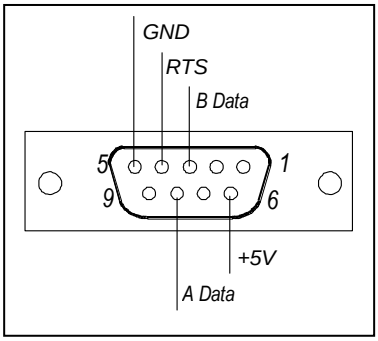

The Profibus subscriber can therefore be identified by the master system even without a power supply to the frequency inverter. The data required for this (PPO type and Profibus address) are provided via a rotary coding switch.

Data exchange is specified in DIN 19245 Part 1 and 2 and application-specific upgrades in Part 3 of this standard. Within the European field bus standardisation process, Profibus is integrated into the European field bus standard pr EN 50170.

The termination resistor for the last bus participant is located in the Profibus standard plug.

Note: The settings made using the rotary coding switch are not transferred to the frequency inverter. Detailed information can be found in the operating instructions **BU 0020**.

Status LEDs	BR (green)	**B**us **R**eady, normal operation, cyclical data transmission	
	BE (red)	**B**us **E**rror, interrupted data traffic, details in BU 0020	

3.1.8 CANopen module (SK TU1-CAO)

The CANopen interface on the NORDAC frequency inverter enables the parameterisation and control of the devices in accordance with CANopen specifications.

Up to 127 participants can be addressed on a single Bus. A termination resistor is integrated and can be switched on.

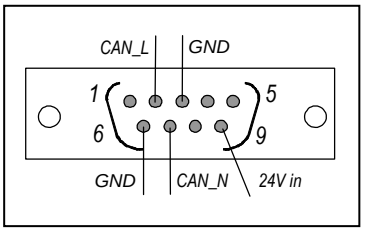

The transfer rate (10kBaud and 500kBaud) and the Bus addresses are set using rotary coding switches or the applicable parameters.

Detailed information can be found in the operating instructions **BU 0060,** or contact the supplier of the frequency inverter.

CANopen Status LEDs	CR (green)	CANopen RUN LED	**Module status LEDs**	DR (green)	Module status
	CE (red)	CANopen ERROR LED		DE (red)	Module error

3.1.9 DeviceNet module (SK TU1-DEV)

DeviceNet is an open communications profile for distributed industrial automation systems. It is based on the CAN Bus system.

Up to 64 participants can be linked to one Bus system.

The transfer rate (125, 250, 500 kBit/s) and the Bus addresses are set using rotary coding switches or the applicable parameters.

Detailed information can be found in the operating instructions **BU 0080**, or contact the supplier of the frequency inverter.

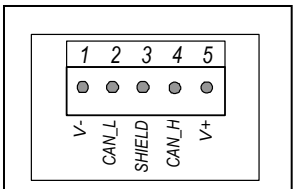

Voltage V+: 24V=

DeviceNet status LEDs	MS (red/green)	Module status	**Module status LEDs**	DS (green)	Module status
	MS (red/green)	Mains (bus) status		DE (red)	Module error

3.1.10 InterBus module (SK TU1-IBS)

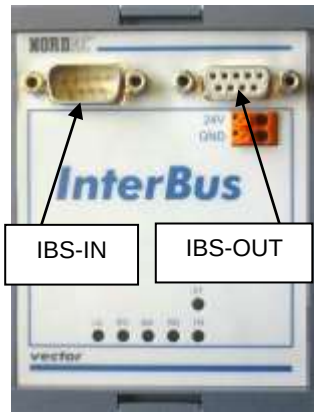

With InterBus up to 256 participants with different automation devices can exchange data. PLC's, PC's, operating and monitoring devices can all communicate via a uniform bus in serial bit mode.

NORDAC frequency inverters are remote bus participants. The data width is variable (3 words; 5 words), at a baud rate of 500kBit/s (optional 2Mbit/s). An additional termination resistor is not necessary as it is already integrated. Addressing is carried out automatically by means of the physical arrangement of the participants.

An external 24V supply is required for uninterrupted Bus operation.

Detailed information can be found in the operating instructions **BU 0070**, or contact the supplier of the frequency inverter.

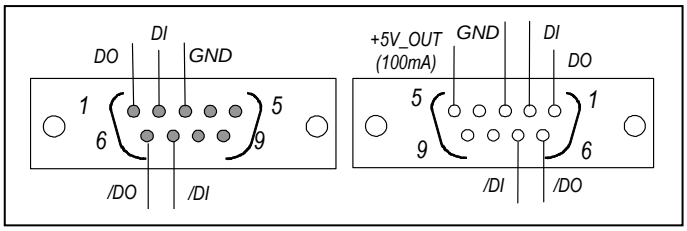

3.1.11 AS interface (SK TU1-AS1)

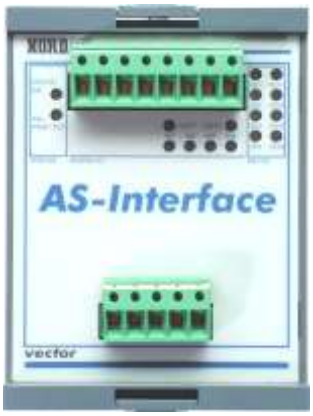

The **A**ctuator-**S**ensor-**Interface** (AS interface) is a bus system for the simple field bus level. The transmission principle is a single master system with cyclical polling. A maximum of 31 slaves (or 62 A/B slaves) can be operated on an up to 100m long unshielded two-wire cable in any network structure (tree/line/star). The AS interface cable (yellow) transmits data and energy while a second two-wire cable can be used for a small auxiliary voltage (24V). Addressing is implemented via the master, which can also provide other management functions, or via a separate addressing device. The 4 bit reference data (per direction) are cyclically transmitted with an effective error protection at a maximum cycle time of 5ms.

Detailed information can be found in the operating instructions **BU 0090**, or contact the supplier of the frequency inverter.

The SK 700 E supports the AS interface technology unit from software version 3.1 Rev. 1 (P707 / P742).

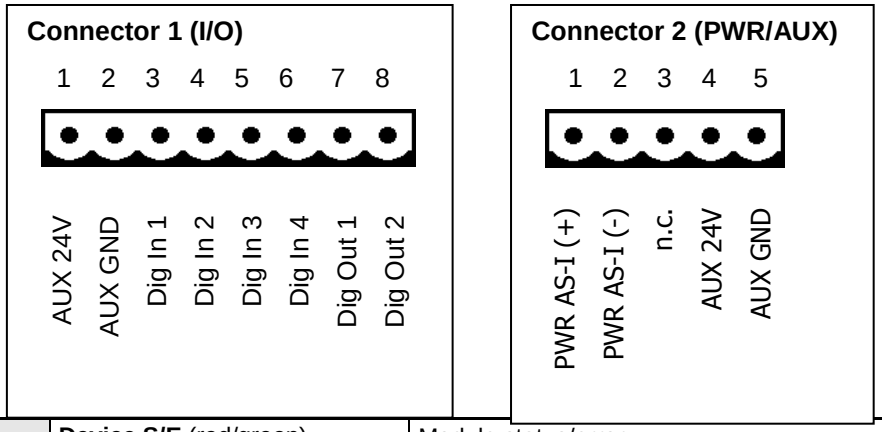

Status LEDs	**Device S/E** (red/green)	Module status/error.
	AS- Int. PWR/FLT (red/green)	Standard status display for AS interface slaves.
Digital I/O LEDs	**OUT 1 … 2** (yellow)	Status of the AS interface bits received/transmitted from the Master.
	IN 1 ... 4 (yellow)	
AS-I I/O LEDs	**DI 1 ...** 4 (yellow)	Status at digital input/output.
	DO 1 ... 4 (yellow)	

3.2 Customer units

(**C**ustomer **U**nits, Option)

Customer units are optional push-in modules whose slots are located inside the frequency inverter. Following insertion and switching on the mains supply, they are automatically identified by the inverter, and the required parameters are made available.

Cable connection is via *direct plug-in clip connectors* with spring terminals. This makes the connection of devices very easy and convenient.

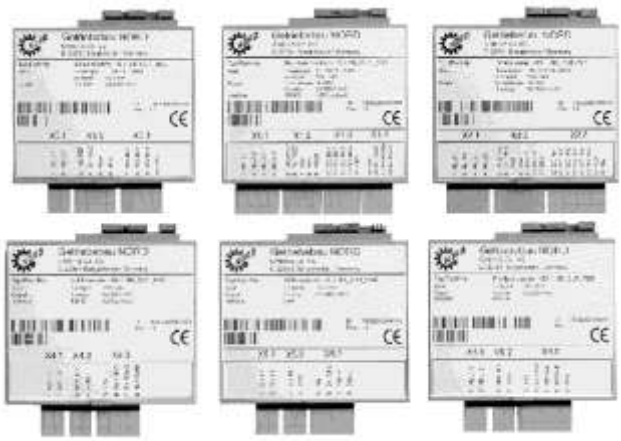

Customer unit SK CU1-...	Description	Data
Basic I/O SK CU1-BSC	Simplest custom interface for optimum adaptation to the application.	1 x multifunction relays 3 x digital inputs 1 x analog input, 0...10V
Standard I/O SK CU1-STD	Upgraded functionality of control signals, including USS bus control.	2 x multifunction relays 4 x digital inputs 1 x analog input, 0...10V, 0/4...20mA 1 x analog outputs, 0...10V 1 x RS 485
Multi I/O SK CU1-MLT	Top functionality of digital and analog signal processing.	2 x multifunction relays 6 x digital inputs 2 x analog inputs, -10...+10V, 0/4...20mA 2 x analog outputs, 0...10V
Multi I/O SK CU1-MLT-20mA	Top functionality of digital and analog signal processing.	2 x multifunction relays 6 x digital inputs 2 x analog inputs, -10...+10V, 0/4...20mA 2 x analog outputs, 0/4...20mA
Profibus SK CU1-PBR	This interface enables control of the NORDAC SK 700E via the Profibus DP serial port.	1 x multifunction relays 1 x digital inputs 1 x Profibus
CAN bus SK CU1-CAN-RJ	This unit enables control of the NORDAC SK 700E via the CANbus port.	1 x multifunction relays 5 x digital inputs 2 x CANbus connectors RJ45

NOTE, for 5V / 15V power supplies

The customer units **and** special extension units currently have various power supplies (5V / 15V) that can be used externally. The maximum permissible external **load current is 300mA**. This can be taken from one or more power supplies. The total current must however not exceed 300mA.

All control voltages are based on a common reference potential!

Potentials AGND /0V und GND /0V are internally linked in the device.

Motor temperature protection - applies to all customer units! -

For secure protection against motor overheating, a **temperature sensor** (PTC thermistor (PTC, PTC) can be connected to any digital input (excluding multi-I/O).

The appropriate parameters (P420 ... P423 or P425, depending on option) must be set to a value of 13 (PTC thermistor input) for this purpose.

NOTE: With multi I/O only digital input 6 (P425) is possible!

The supply voltage varies dependent upon the customer unit. The lowest voltage possible should be chosen.

Internal switching in the inverter prevents excessive PTC voltage.

The cable routing should always be separate from the motor cable and with shielded cables.

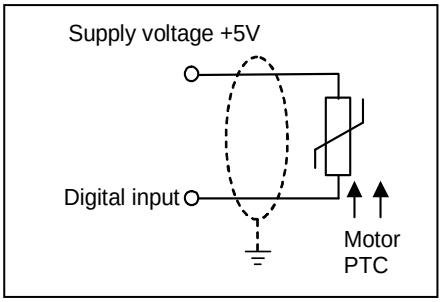

Installation of the customer unit:

WARNING / NOTE

Installation must be carried out by qualified personnel only, paying particular attention to safety and warning instructions.

Customer units must not be inserted/removed when live.

1. Switch off the mains voltage, observe the waiting period.
2. Remove the cover grid from the connection area by loosening the 2 screws and levering out the device cover (slot, see Fig.) or simply pull it out.
3. Move the locking lever to the "**open**" position.
4. Using light pressure, push the customer unit into the upper guide rail until it engages and lies flush with the plastic frame.
5. Move the locking lever to the "**closed**" position.
6. Remove the connector by pressing the releases then make the necessary connections. Then insert the connectors until they engage.
7. Replace all covers.

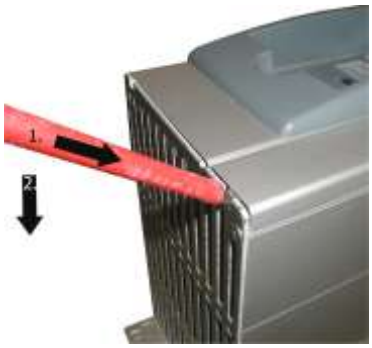

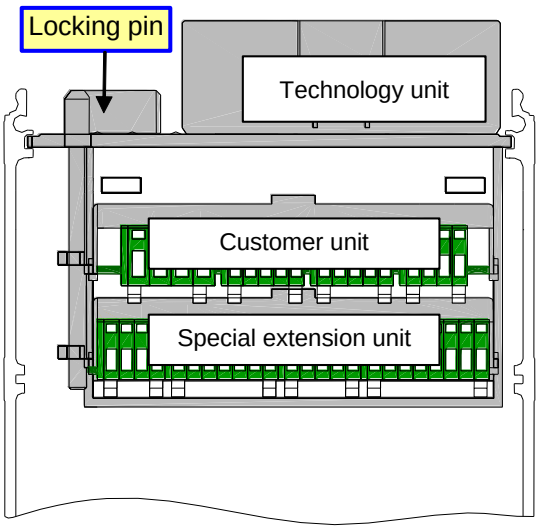

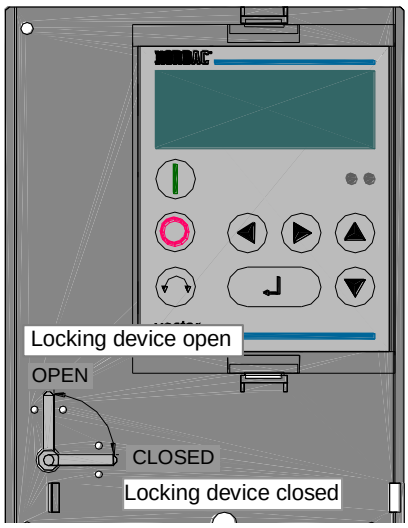

Removal of customer interfaces, up to 22kW:

WARNING / NOTE

Installation must be carried out by qualified personnel only, paying particular attention to safety and warning instructions.

Customer units must not be inserted/removed when live.

1. Switch off the mains voltage, observe the waiting period.
2. Remove the cover grid from the connection area by loosening the 2 screws and levering out the device cover (slot) or simply pull it out.
3. Locking lever in the "**open**" position.
4. Using a screwdriver (as shown), lever the customer unit out of its engaged position and then remove it by hand.
5. Move the locking lever to the "**closed**" position.
6. Replace all covers.

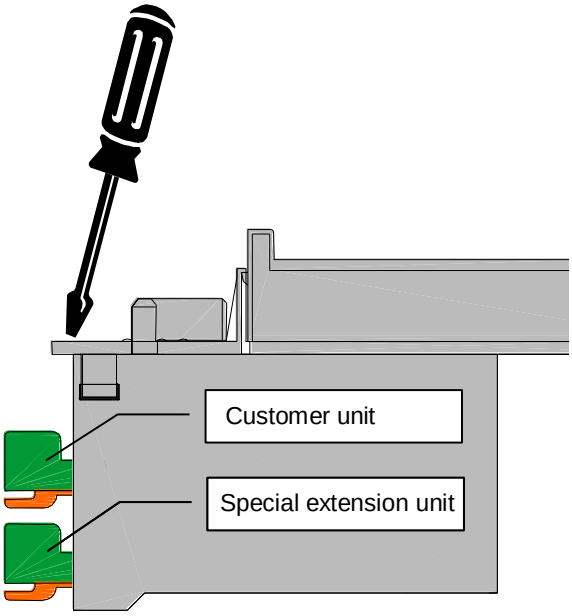

Note:

Following the insertion, replacement or removal of modules, and once the equipment has been switched on again, this procedure is indicated with the message E017 *Customer unit changed*.

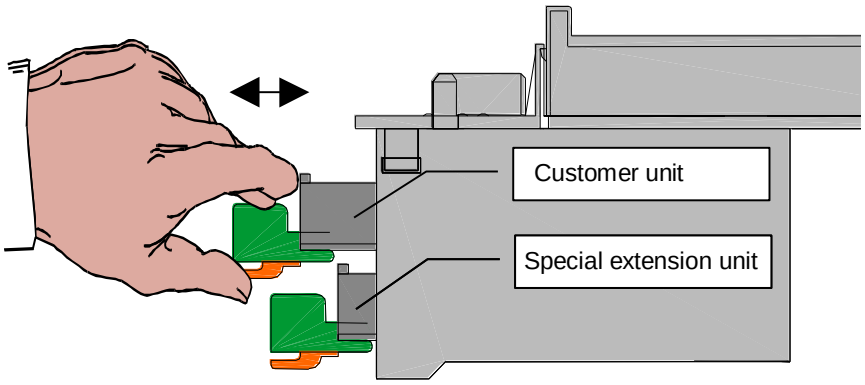

Different position of customer units, in devices from 30 kW:

⚠	**WARNING / NOTE** Installation must be carried out by qualified personnel only, paying particular attention to safety and warning instructions. Customer units must not be inserted/removed when live.

The procedure is as described above; however no locking lever is present. The modules engage on the front edge when they are inserted.

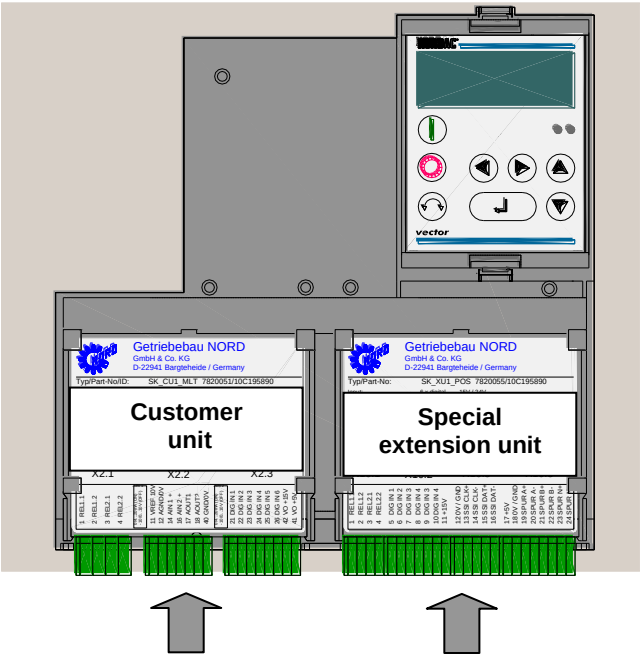

... Different removal of the customer units, for devices > 30 kW:

As shown, simply lever out from the upper edge. If this is difficult, simply undo the locking hook on the front edge.

NOTE: Ensure that the mains voltage is switched off and that sufficient waiting time has expired.

NOTE: Following the insertion, replacement or removal of modules, and once the equipment has been switched on again, this procedure is indicated with the message **E017** *Customer unit changed*.

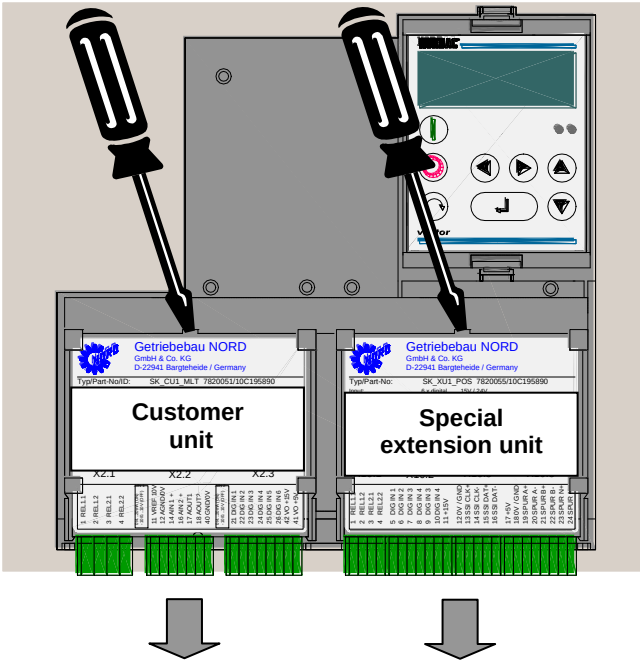

3.2.1 Basic I/O

(SK CU1-BSC, Option)

The **C**ustomer **U**nit Basic I/O provides sufficient control terminals for simple control tasks and is therefore an economic solution for many applications.

1 analog input and 3 digital outputs are available to control the frequency inverter. The analog differential input can process positive signals of 0...10V.

By means of a relay contact, brake control and even warnings to another system can be initiated. There are a total of 13 different relay functions available.

The digital inputs of the Basic I/O can also be assigned analog functions (see process controller, Chapter 8.2). Here, input voltages ≥10V are processed as 10V signals and correspond to 100%.
(9V = 90%, ... , 0V=0%)

Connector	Functions	Maximum cross-section	Parameter
X3.1	Output relay	1.5 mm^2	P434 ... P436
X3.2	Analog input	1.5 mm^2	P400 ... P408
X3.3	Digital inputs	1.5 mm^2	P420 ... P422

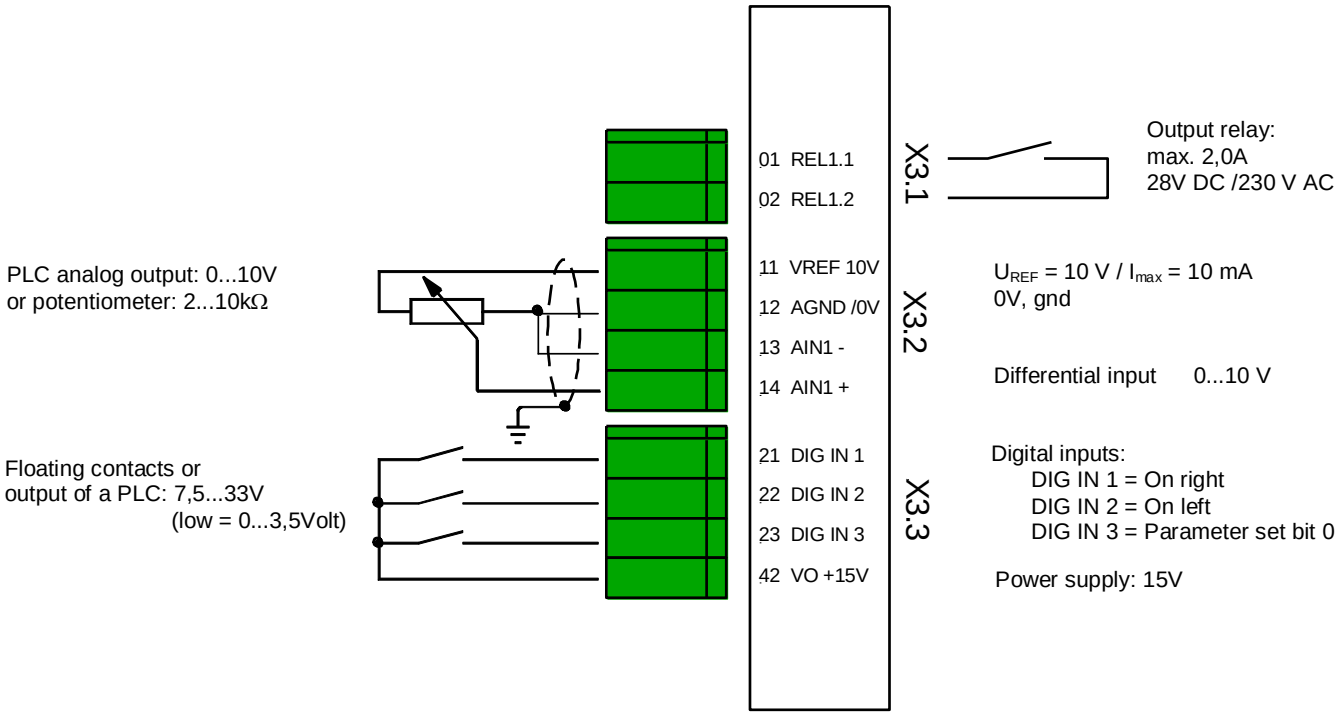

NOTE: All control voltages are based on a common reference potential!
Potentials AGND /0V und GND /0V are internally linked in the device.
The maximum total current 5/15V is 300mA!

WARNING / NOTE

It is not permissible to connect the output relay of the Customer Unit (SK CU...and SK XU) to dangerous voltages(≥60VAC) if a contact of the relay is connected to a circuit with safe isolation.

3.2.2 Standard I/O

(SK CU1-STD, Option)

The **C**ustomer **U**nit standard I/O provides sufficient control terminals for most applications and it is fully terminal-compatible with NORDAC *vector mc*.

There are 1 differential analog input and 4 digital inputs available for control of the frequency inverter. The analog input can process signals from 0...10V or 0...20mA and/or 4...20mA (with additional burden resistance).

The analog output allows actual operating parameters to be transmitted to a display device or process control system. The output signal is scalable and available in the voltage range 0...10V.

By means of the two relay contacts, brake control and even warnings to another system can be initiated.

The connected inverter can be controlled and parameterised via the interface RS485. A simple function test of the frequency inverter can be carried out using NORD CON software. Following successful parameterisation, the complete data set can be stored as a file.

The digital inputs of the Standard I/O can also be assigned analog functions (see process controller, Chapter 8.2). Here, input voltages ≥10V are processed as 10V signals and correspond to 100%. (9V = 90%, ... , 0V=0%)

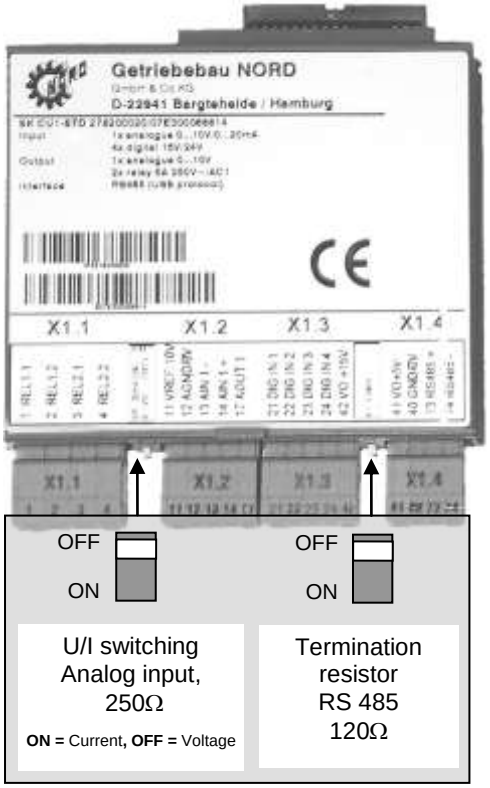

Connector	Functions	Maximum cross-section	Parameter
X1.1	Output relay	1.5 mm^2	P434 ... P443
X1.2	Analog signals IN / OUT	1.0 mm^2	P400 ... P419
X1.3	Digital inputs	1.0 mm^2	P420 ... P423
X1.4	Bus signals / power supply	1.0 mm^2	P507 ... P513

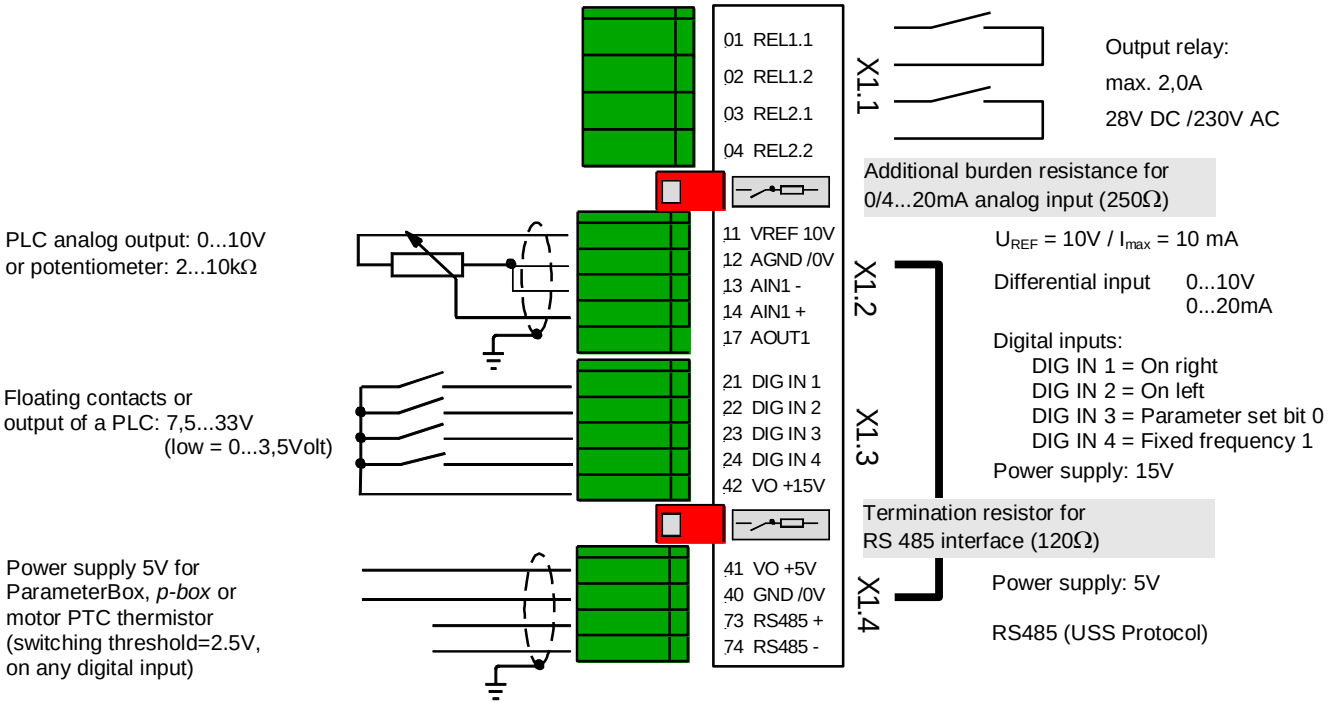

NOTE: All control voltages are based on a common reference potential!
Potentials AGND /0V und GND /0V are internally linked in the device.
The maximum total current 5/15V is 300mA!

WARNING / NOTE

It is not permissible to connect the output relay of the Customer Unit (SK CU...and SK XU) to dangerous voltages(≥60VAC) if a contact of the relay is connected to a circuit with safe isolation.

3.2.3 Multi I/O

(SK CU1-MLT, Option)

The Multi I/O **C**ustomer **U**nit provides the highest functionality of digital and analog signal processing. 2 analog inputs and 6 digital outputs are available to control the frequency inverter. Both analog inputs can process signals from 0...10V, 0...20mA (4...20mA) or -10V...+10V.

Two programmable and scalable analog outputs 0...10V enable actual operating parameters to be transmitted to a display device or process control system.

By means of the two relay contacts, brake control and even warnings to another system can be initiated.

The digital inputs of the multi I/O cannot process analog setpoints! (See also Chap. 5.1.5, P420-P425)

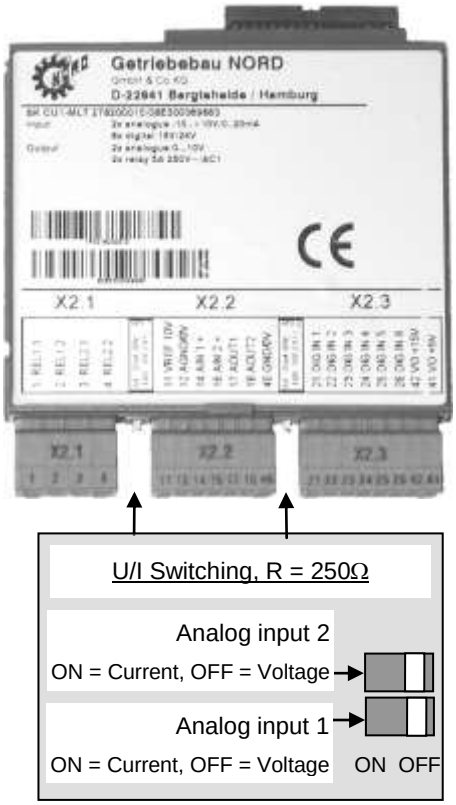

Connector	Functions	Maximum cross-section	Parameter
X2.1	Output relay	1.5 mm^2	P434 ... P443
X2.2	Analog signals IN / OUT	1.0 mm^2	P400 ... P419
X2.3	Digital inputs	1.0 mm^2	P420 ... P425

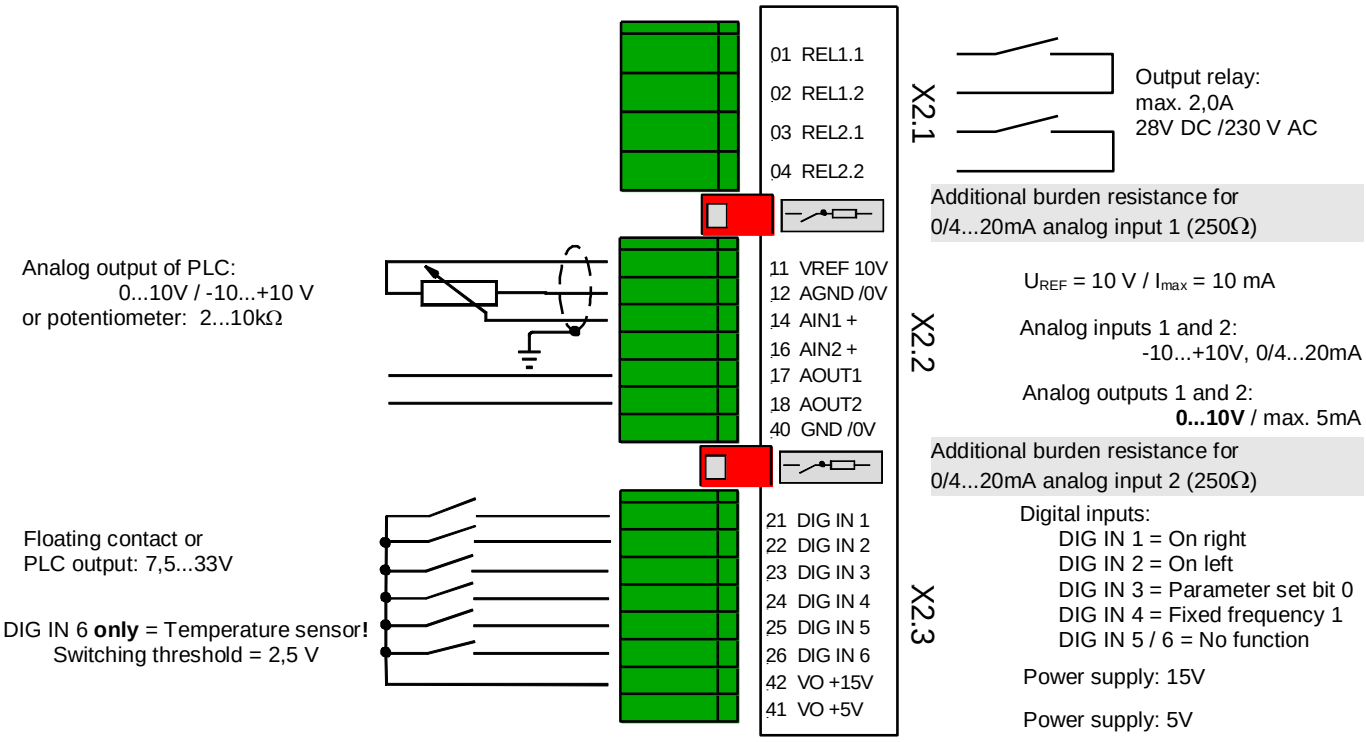

NOTE: All control voltages are based on a common reference potential!
Potentials AGND /0V und GND /0V are internally linked in the device.
The maximum total current 5/15V is 300mA!

WARNING / NOTE

It is not permissible to connect the output relay of the Customer Unit (SK CU...and SK XU) to dangerous voltages(≥60VAC) if a contact of the relay is connected to a circuit with safe isolation.

3.2.4 Multi I/O 20mA

(SK CU1-MLT-20mA, Option)

The Multi I/O 20mA Customer Unit provides top functionality for digital and analog signal processing. 2 analog inputs and 6 digital outputs are available to control the frequency inverter. Both analog inputs can process signals from 0...10V, 0...20mA (4...20mA) or -10V...+10V.

Two programmable and scalable analog outputs 0/4...20mA (P458) enable actual operating parameters to be transmitted to a display device or process control system.

By means of the two relay contacts, brake control and even warnings to another system can be initiated.

The digital inputs of the multi I/O cannot process analog setpoints! (See also Chap. 5.1.5, P420-P425)

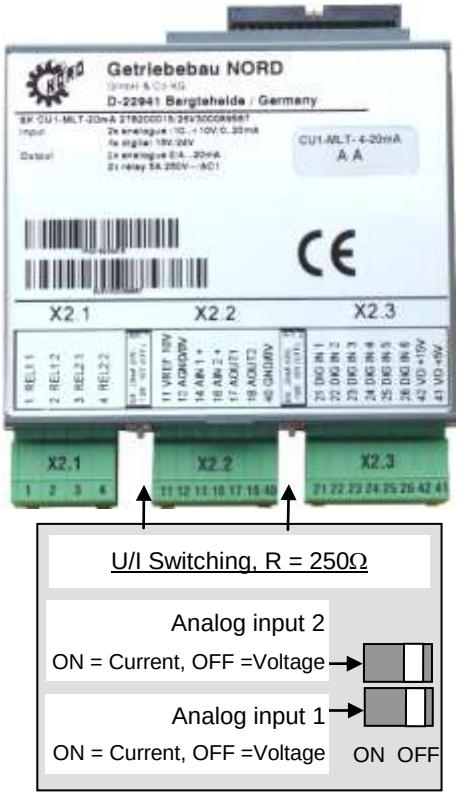

Connector	Functions	Maximum cross-section	Parameter
X2.1	Output relay	1.5 mm^2	P434 ... P443
X2.2	Analog signals IN / OUT	1.0 mm^2	P400 ... P419, P458
X2.3	Digital inputs	1.0 mm^2	P420 ... P425

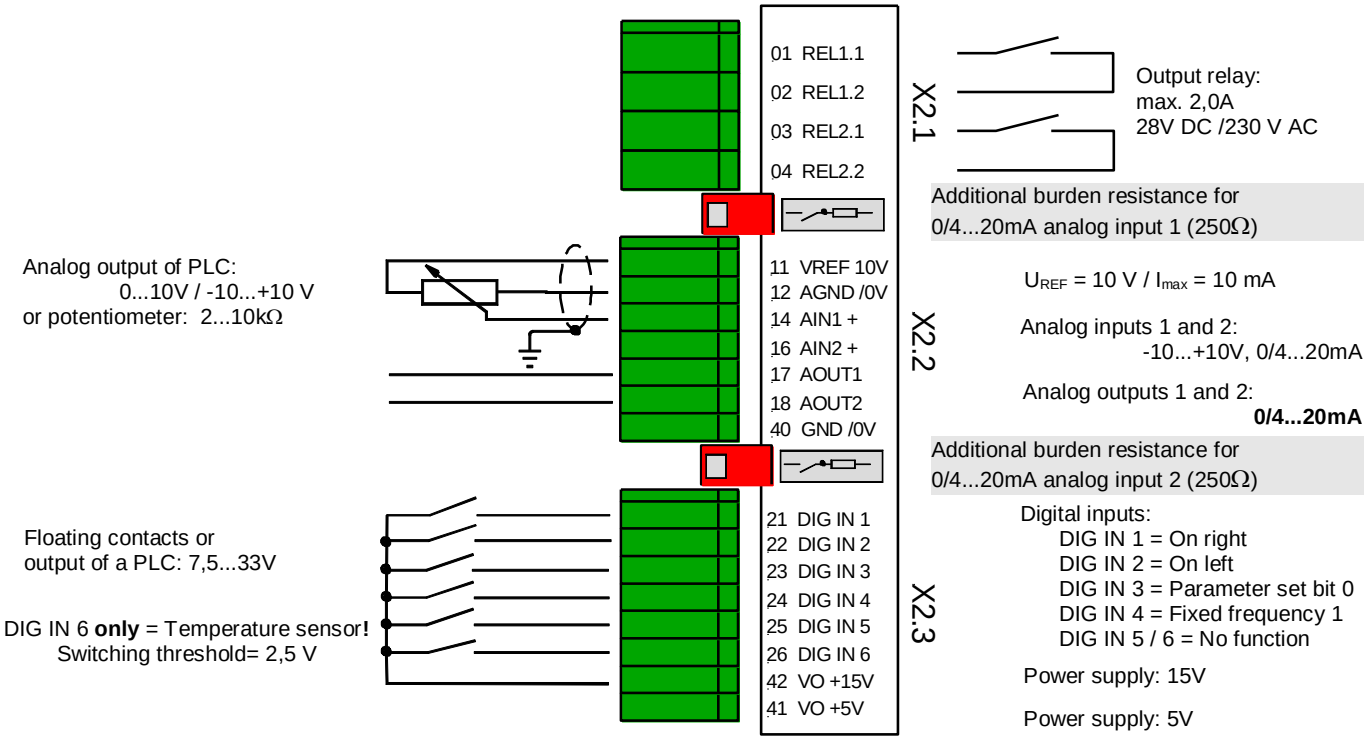

NOTE: ll control voltages are based on a common reference potential!
Potentials AGND /0V und GND /0V are internally linked in the device.
The maximum total current 5/15V is 300mA!

WARNING / NOTE

It is not permissible to connect the output relay of the Customer Unit (SK CU...and SK XU) to dangerous voltages(≥60VAC) if a contact of the relay is connected to a circuit with safe isolation.

3.2.5 BUS customer units

(SK CU1-USS, SK CU1-CAN/-RJ, SK CU1-PBR Option)

In addition to data connections, all Bus customer units also provide conventional digital inputs and outputs.

By means of a relay contact, brake control and even warnings to another system can be initiated.

The digital input has a 2.5V switching threshold for the evaluation of the temperature sensor. The input can, however, also be used for an emergency stop function.

All BUS switching components have the same basic design. However, the Profibus Option has an RTS signal output on connector X6.3.83 in addition to the data leads. In addition, the Profibus module also has a second set of data connections (X6.4) and a DIP switch for the termination resistors at the front.

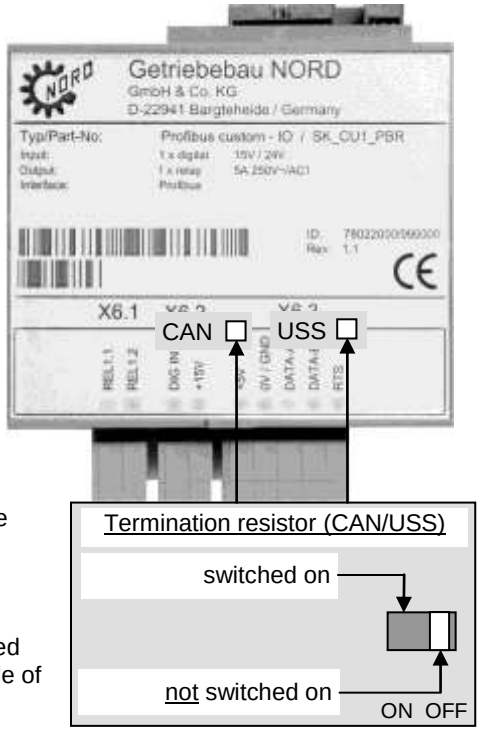

Note: Further details can be found in the applicable operating instructions for the Bus systems,
Profibus ⇒ BU 0020 DE, CANnord ⇒ BU 0060 DE, USS ⇒ BU 0050 DE

Note: The BUS customer units include two SK8 shielding clips which can be used to provide a better shielding connection of the bus cable to the shield angle of the SK 700E.

USS SK CU1-USS	CAN SK CU1-CAN	CAN RJ SK CU1-CAN-RJ	Profibus SK CU1-PBR	Functions	Maximum cross-section
X4.1	X5.1	X7.1	X6.1	Output relay	1.5 mm^2
X4.2	X5.2	X7.2	X6.2	Digital input	1.5 mm^2
X4.3	X5.3	RJ45	X6.3	Data leads	1.5 mm^2 / RJ45
--	--	RJ45	X6.4	Data leads, parallel	1.5 mm^2 / RJ45

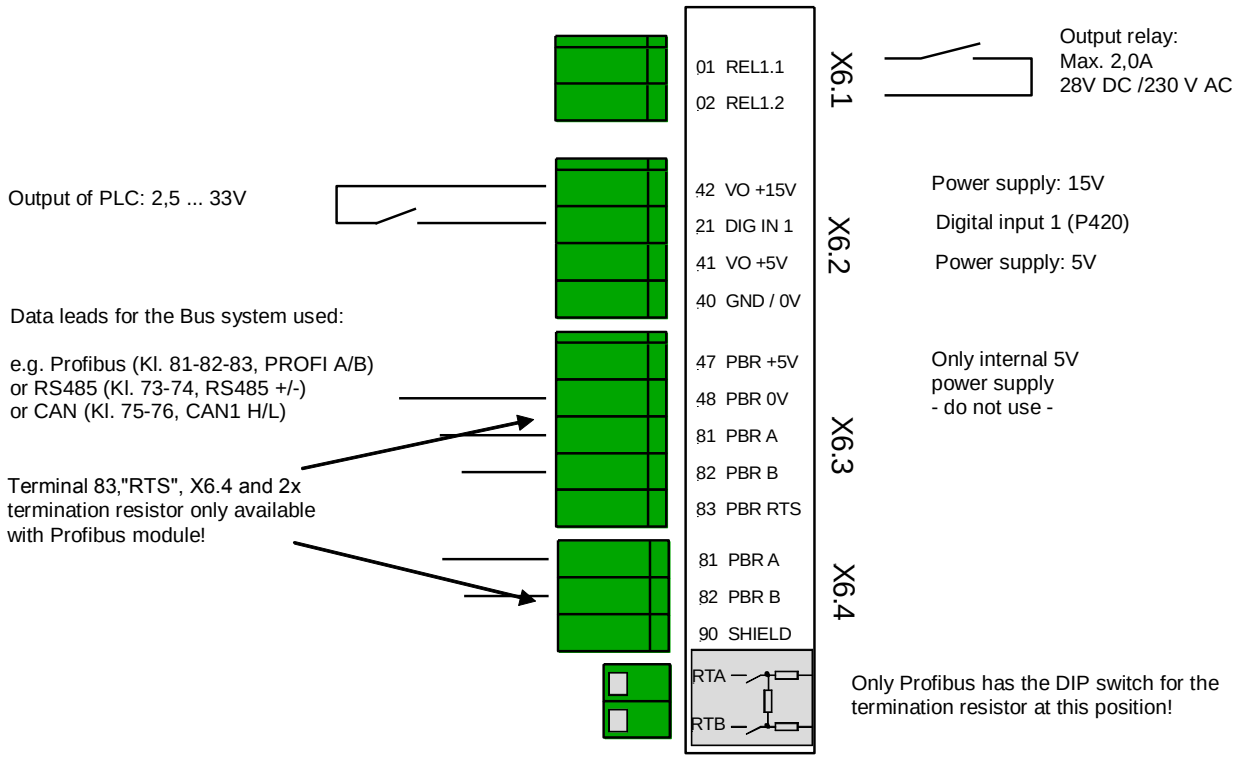

NOTE: All control voltages are based on a common reference potential!
Potentials AGND /0V und GND /0V are internally linked in the device.
The maximum total current 5/15V is 300mA!

WARNING / NOTE

It is not permissible to connect the output relay of the Customer Unit (SK CU...and SK XU) to dangerous voltages(≥60VAC) if a contact of the relay is connected to a circuit with safe isolation.

3.3 Special extension units

(E**X**tension **U**nit, Option)

Special extension units are very similar to the customer units; they are however designed for other functions and can only be placed in the lower slots. After insertion, they are automatically identified by the frequency inverter.

Cable connection is via *direct plug-in clip connectors* with spring terminals. This makes the connection of devices very easy and convenient.

Special extension unit SK XU1-...	Description	Data
Encoder **SK XU1-ENC**	For highly accurate speed control from standstill to double the rated speed	1 x digital input 1 x encoder input, RS 422 up to 250kHz
PosiCon **SK XU1-POS**	Programmable positions are reached and maintained by means of path calculations. The actual value acquisition is with an incremental or absolute value encoder	Up to 252 positions 6 x digital inputs 2 x multifunction relays 1 x SSI interface, RS 422 1 x encoder input, RS 422 up to 250kHz

NOTE, for 5V / 15V power supplies

The customer units **and** special extension units currently have various power supplies (5V / 15V) that can be used externally. The maximum permissible external **load current is 300mA**. This can be taken from one or more power supplies. The total current must however not exceed 300mA.
All control voltages are based on a common reference potential!

Potentials AGND /0V und GND /0V are internally linked in the device.

Installation of the special extension units

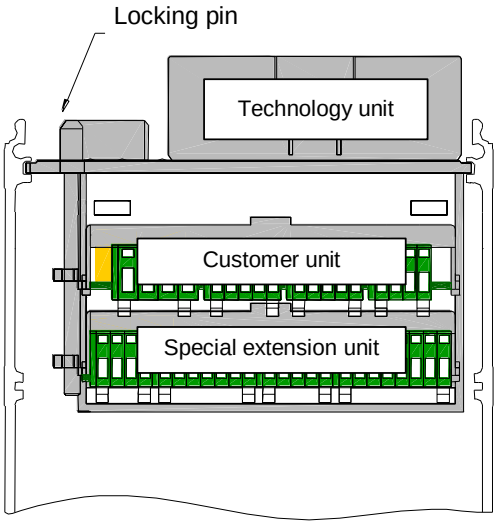

NOTE

Installation must be carried out by qualified personnel only, paying particular attention to safety and warning instructions.

Customer units must not be inserted/removed when live.

1. Switch off the mains voltage, observe the waiting period.
2. Remove the cover grid from the connection area by loosening the 2 screws and levering out the device cover (slot) or simply pull it out.
3. Locking lever in the "**open**" position.
4. Using light pressure push the special extension unit into the lower guide rail until it engages.
5. Move the locking lever to the "**closed**" position.
6. Remove the connector by pressing the releases then make the necessary connections. Then insert the connectors until they engage.
7. Replace all covers.

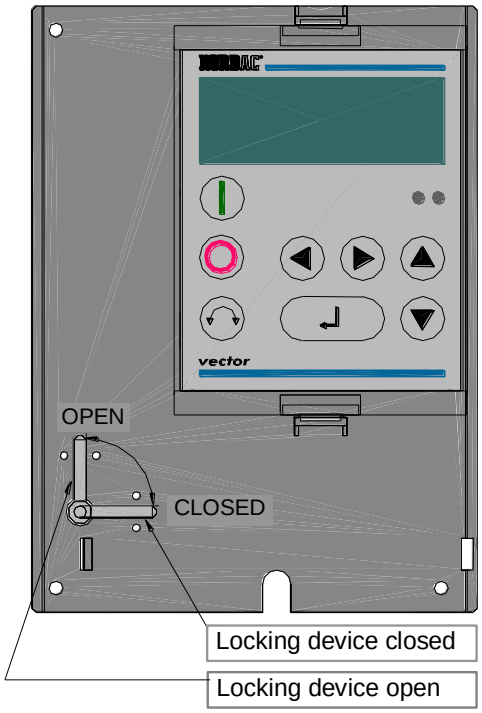

Removal of the special extension units:

WARNING / NOTE

Installation must be carried out by qualified personnel only, paying particular attention to safety and warning instructions.

Customer units must not be inserted/removed when live.

1. Switch off the mains voltage, observe the waiting period.
2. Remove the cover grid from the connection area by loosening the 2 screws and levering out the device cover (slot) or simply pull it off.
3. Locking lever in the "**open**" position.
4. Using a screwdriver (as shown), lever the customer unit out of its engaged position and then remove it by hand.
5. Move the locking lever to the "**closed**" position.
6. Replace all covers.

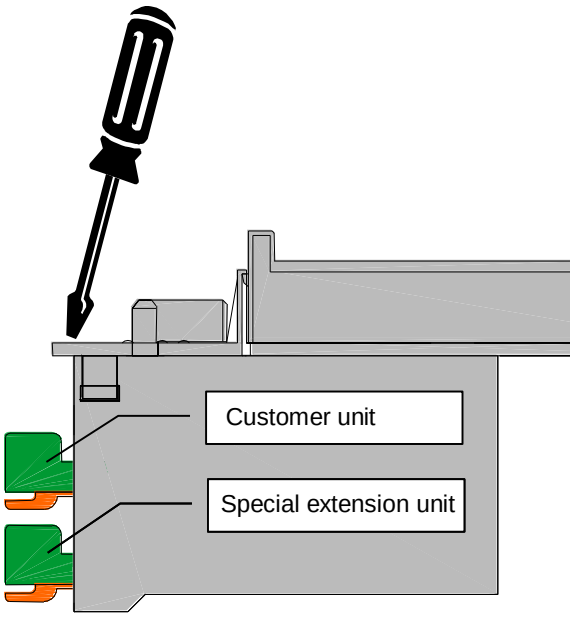

Note:

Following the insertion, replacement or removal of modules, and once the equipment has been switched on again, this procedure is indicated with the message **E017** *Customer unit changed*.

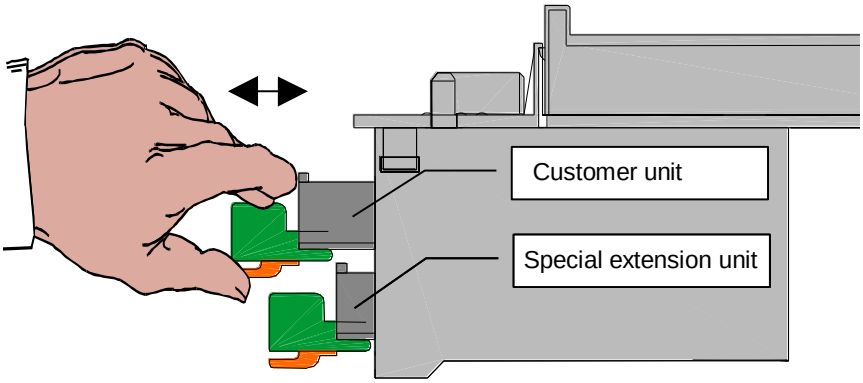

Different position of the special extension unit, for devices > 22 kW:

WARNING / NOTE

Installation must be carried out by qualified personnel only, paying particular attention to safety and warning instructions.

Customer units must not be inserted/removed when live.

The procedure is as above, however no locking lever is present. The module engages when pushed in.

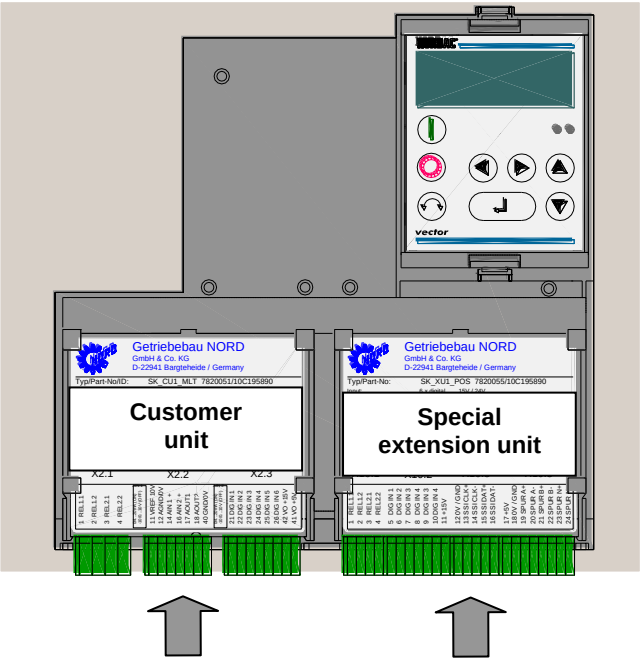

... Different removal of special extension units in devices > 22 kW:

As shown, simply lever out from the upper edge.

Ensure that the mains voltage is switched off and that sufficient waiting time has expired.

Note:

Following the insertion, replacement or removal of modules, and once the equipment has been switched on again, this procedure is indicated with the message **E017** *Customer unit changed*.

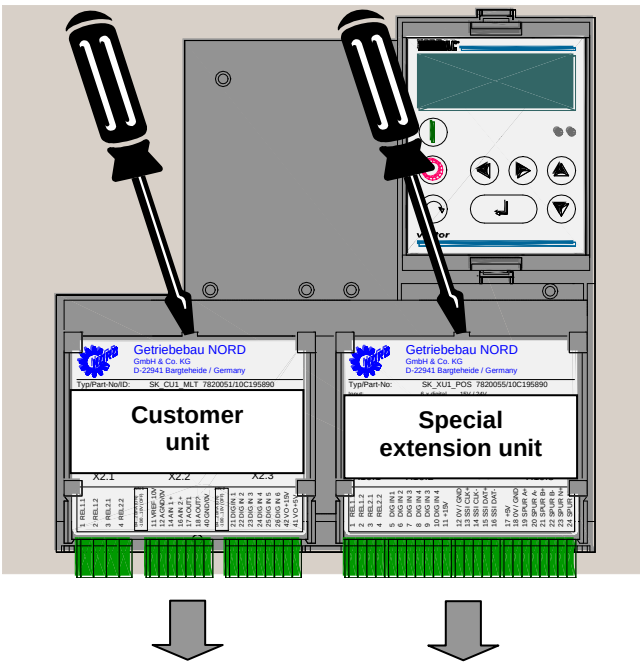

3.3.1 PosiCon I/O

(SK XU1-POS, Option)

The special extension unit (E**X**tension **U**nit) PosiCon I/O is a positioning control system integrated in the frequency inverter. Previously programmed positions are reached dynamically and precisely by means of path calculations.

The position acquisition is implemented by an incremental (RS422) or absolute encoder (SSI protocol).

The encoder can be fitted on the motor or the load, step-up/step-down can be freely selected.

Note: Further details can be found in the operating instructions BU 0710, specially produced for this option.

Maximum connection cross-section of the control leads:

Connector	Functions	Maximum cross-section	Parameter
X10.1	Output relay	1.0 mm^2	P624 ... P629
X10.2	Digital inputs	1.0 mm^2	P617 ... P623
X10.3	SSI Input	1.0 mm^2	P605 ... P609
X10.4	Incremental encoder input	1.0 mm^2	

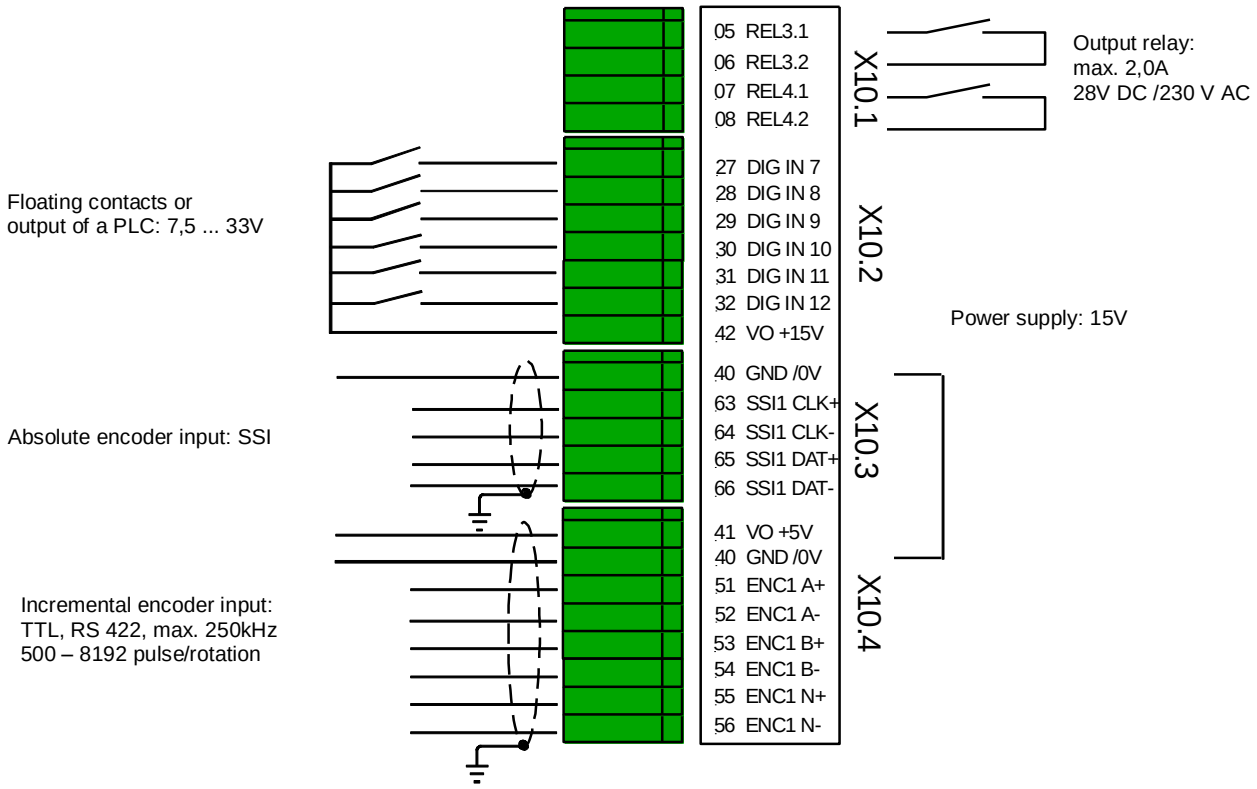

NOTE: All control voltages are based on a common reference potential!
Potentials AGND /0V und GND /0V are internally linked in the device.
Max permitted current loading from all current sources= 300mA

WARNING / NOTE

It is not permissible to connect the output relay of the Customer Unit (SK CU...and SK XU) to dangerous voltages(≥60VAC) if a contact of the relay is connected to a circuit with safe isolation.

3.3.2 Encoder I/O

(SK XU1-ENC, Option)

The special extension (E**X**tension **U**nit) encoder I/O offers the possibility of connecting an incremental encoder with a TTL signal level. The incremental encoder must be mounted directly on the motor shaft.

This accessory enables highly accurate speed control from standstill to double the rated speed.

This option is especially recommended for lifting applications as it provides the best load control.

Connection details can also be found in Chapter 3.5.

Maximum connection cross-section of the control leads:

Connector	Functions	Maximum cross-section	Parameter
X11.1	Power supply and digital input	1.5 mm^2	P300 ... P330
X11.2	Incremental encoder	1.5 mm^2	

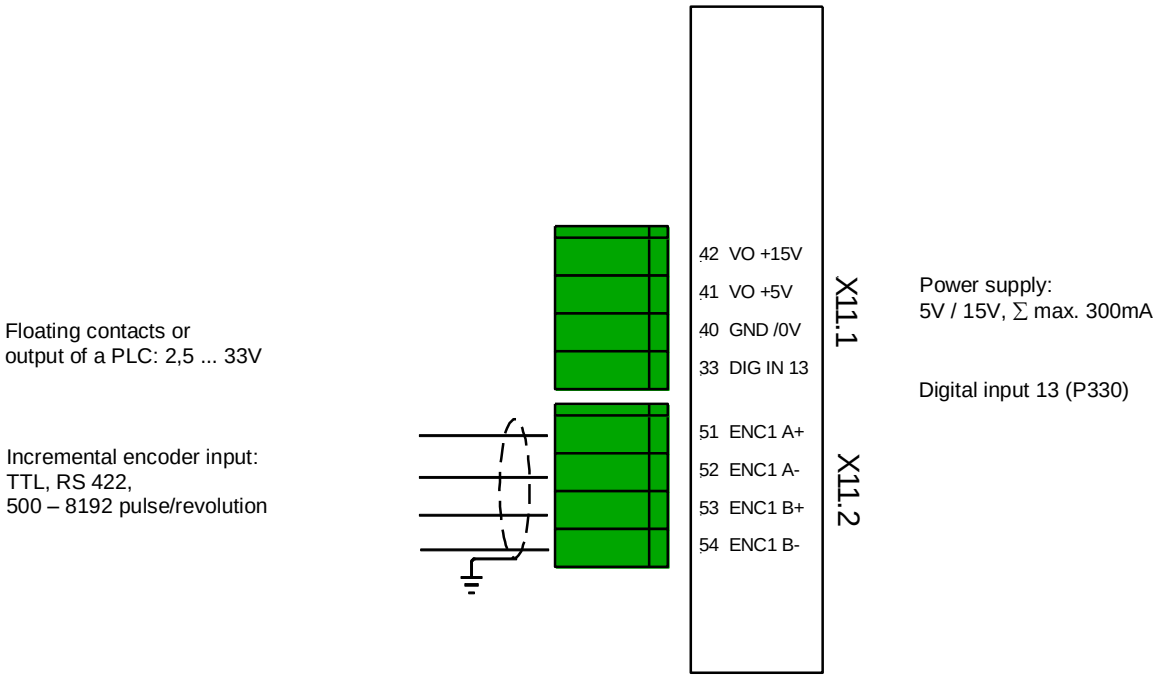

NOTE: All control voltages are based on a common reference potential!
Potentials AGND /0V und GND /0V are internally linked in the device.
Max permitted current loading from all current sources = 300mA

3.4 Customer I/Os terminals

Function	Data	Desig-nation	Customer Units / Special Extension Units							
			Terminal							
Relay	Closing contact I_{max} = 2A U_{max} = 28V DC / 230V AC		BSC	STD	MLT	USS	CAN	PBR	POS	ENC
		REL 1.1	X3.1.01	X1.1.01	X2.1.01	X4.1.01	X5.1.01	X6.1.01	-	-
		REL 1.2	X3.1.02	X1.1.02	X2.1.02	X4.1.02	X5.1.02	X6.1.02	-	-
		REL 2.1	-	X1.1.03	X2.1.03	-	-	-	-	-
		REL 2.2	-	X1.1.04	X2.1.04	-	-	-	-	-
		REL 3.1	-	-	-	-	-	-	X10.1.05	-
		REL 3.2	-	-	-	-	-	-	X10.1.06	-
		REL 4.1	-	-	-	-	-	-	X10.1.07	-
		REL 4.2	-	-	-	-	-	-	X10.1.08	-
Reference voltage source +10V	I_{max} = 10 mA		BSC	STD	MLT	USS	CAN	PBR	POS	ENC
		VREF 10V	X3.2.11	X1.2.11	X2.2.11	-	-	-	-	-
Reference potential GND	Reference potential for the inverter connected via resistor and capacitor to PE		BSC	STD	MLT	USS	CAN	PBR	POS	ENC
		AGND /0V	X3.2.12	X1.2.12	X2.2.12	-	-	-	-	-
		GND /0V	-	X1.4.40	X2.2.40	X4.3.40	X5.3.40	X6.3.40	X10.3.40	X11.1.40
									X10.4.40	
Analog inputs	AIN1 = Differential voltage input with 0V ... 10V Ri ≈ 40 kΩ AIN1 + AIN 2 = -10V...+10V Ri ≈ 20 kΩ		BSC	STD	MLT	USS	CAN	PBR	POS	ENC
		AIN1 -	X3.2.13	X1.2.13	-	-	-	-	-	-
		AIN1 +	X3.2.14	X1.2.14	-	-	-	-	-	-
		AIN1 +	-	-	X2.2.14	-	-	-	-	-
		AIN2 +	-	-	X2.2.16	-	-	-	-	-
Analog output	0V ... 10V I_{max} = 5 mA Resolution = 8 Bit Accuracy = 0.1 V		BSC	STD	MLT	USS	CAN	PBR	POS	ENC
		AOUT1	-	X1.2.17	X2.2.17	-	-	-	-	-
		AOUT2	-	-	X2.2.18	-	-	-	-	-
Digital input	Ri ≈ 4 kΩ High = 7.5V .... 33 V Low = 0V ... 7.5V Reaction time = 5ms...15ms NOTE: Input for temperature sensor is under option >BUS< DIG IN 1 only! and >MLT< DIG IN 6 only! Applicable here: Ri ≈ 2 kΩ High = 2.5V .... 33 V Low = 0V ... 2.5V		BSC	STD	MLT	USS	CAN	PBR	POS	ENC
		DIG IN 1	X3.3.21	X1.3.21	X2.3.21	X4.2.21	X5.2.21	X6.2.21	-	-
		DIG IN 2	X3.3.22	X1.3.22	X2.3.22	-	-	-	-	-
		DIG IN 3	X3.3.23	X1.3.23	X2.3.23	-	-	-	-	-
		DIG IN 4	-	X1.3.24	X2.3.24	-	-	-	-	-
		DIG IN 5	-	-	X2.3.25	-	-	-	-	-
		DIG IN 6	-	-	X2.3.26	-	-	-	-	-
		DIG IN 7	-	-	-	-	-	-	X10.2.27	-
		DIG IN 8	-	-	-	-	-	-	X10.2.28	-
		DIG IN 9	-	-	-	-	-	-	X10.2.29	-
		DIG IN 10	-	-	-	-	-	-	X10.2.30	-
		DIG IN 11	-	-	-	-	-	-	X10.2.31	-
		DIG IN 12	-	-	-	-	-	-	X10.2.32	-
		DIG IN 13	-	-	-	-	-	-	-	X11.1.33
Power supply +15 V	Sum of the currents from all power supplies at one inverter: I_{max} = 300 mA		BSC	STD	MLT	USS	CAN	PBR	POS	ENC
		VO +15 V	X3.3.42	X1.3.42	X2.3.42	X4.2.42	X5.2.42	X6.2.42	X10.2.42	X11.1.42
Power supply +5 V			BSC	STD	MLT	USS	CAN	PBR	POS	ENC
		VO +5 V	-	X1.4.41	X2.3.41	X4.3.41	X5.3.41	X6.3.41	X10.4.41	X11.1.41

Function	Data	Desig-nation	Customer Units / Special Extension Units							
			Terminal							
Serial interface	Electrically isolated input Transfer rate **USS** up to 38400 Baud Transfer rate **CAN** up to 500 kBaud Transfer rate **Profibus** up to 1.5 Mbaud **Profibus 24V** 12 MBaud		BSC	STD	MLT	USS	CAN	PBR	POS	ENC
		RS485 +	-	X1.4.73	-	X4.3.73	-	-	-	-
		RS485 -	-	X1.4.74	-	X4.3.74	-	-	-	-
		CAN1 H	-	-	-	-	X5.3.75	-	-	-
		CAN1 L	-	-	-		X5.3.76	-	-	-
		PBR A	-	-	-	-	-	X6.3.81	-	-
		PBR B	-	-	-	-	-	X6.3.82	-	-
		PBR RTS	-	-	-	-	-	X6.3.83	-	-
		PBR A	-	-	-	-	-	X6.4.81	-	-
		PBR B	-	-	-	-	-	X6.4.82	-	-
		SHIELD	-	-	-	-	-	X6.4.90	-	-
Incremental encoder	TTL, RS 422 max. 250kHz 500 – 8192 pulse/revolution		BSC	STD	MLT	USS	CAN	PBR	POS	ENC
		ENC1 A+	-	-	-	-	-	-	X10.4.51	X11.2.51
		ENC1 A-	-	-	-	-	-	-	X10.4.52	X11.2.52
		ENC1 B+	-	-	-	-	-	-	X10.4.53	X11.2.53
		ENC1 B-	-	-	-	-	-	-	X10.4.54	X11.2.54
		ENC1 N+	-	-	-	-	-	-	X10.4.55	-
		ENC1 N-	-	-	-	-	-	-	X10.4.56	-
Absolute encoder	SSI, RS 422 24 bit		BSC	STD	MLT	USS	CAN	PBR	POS	ENC
		SSI1 CLK+	-	-	-	-	-	-	X10.3.63	-
		SSI1 CLK-	-	-	-	-	-	-	X10.3.64	-
		SSI1 DAT+	-	-	-	-	-	-	X10.3.65	-
		SSI1 DAT-	-	-	-	-	-	-	X10.3.66	-

3.5 Colour and contact assignments for the encoder

Function	Cable colours for incremental encoder {xe "Incremental encoder"}	Assignment for encoder option, **SK XU1-ENC**	Assignment for PosiCon option, **SK XU1-POS**
15V supply	brown / green	X11.1.**42** VO +15V	X10.2.**42** VO +15V
0V GND	white / green	X11.1.**40** GND /0V	X10.4.**40** GND /0V
Track A	brown	X11.2.**51** ENC1 A+	X10.4.**51** ENC1 A+
Track A inverse	green	X11.2.**52** ENC1 A-	X10.4.**52** ENC1 A-
Track B	grey	X11.2.**53** ENC1 B+	X10.4.**53** ENC1 B+
Track B inverse	pink	X11.2.**54** ENC1 B-	X10.4.**54** ENC1 B-
Track 0	red	--	X10.4.**55** ENC1 N+
Track 0 inverse	black	--	X10.4.**56** ENC1 N-
Cable shield	connected to a large area of the frequency inverter housing or shielding angle		

NOTE: If there are deviations from the standard equipment (Type 5820.0H40, 10-30V encoder, TTL/RS422) for the motors, please note the accompanying data sheet or consult your supplier.

RECOMMENDATION: For greater operating safety, in particular with long connection cables, we recommend the use of a higher power supply (15V/24V) and an incremental encoder for 10-30V power supply. The signal level must remain at 5V TTL.

ATTENTION: The rotation field of the incremental encoder must correspond to that of the motor. Therefore, depending on the rotation direction of the encoder to the motor (possibly reversed), a negative sign number must be set in parameter P301.

4 Commissioning

General information

Once the power supply has been connected to the frequency inverter, it will be operational after a few moments. In this condition, the frequency inverter can be set up for the application requirements, i.e. parameterised. A complete and comprehensive description of each parameter is set out in the following sections.
The motor should only be started with the enable signal after the parameters have been successfully set by qualified personnel.

ATTENTION: The frequency inverter is not equipped with a line main switch and is therefore always live when connected to the power supply.

4.1 Basic settings

All frequency inverters supplied by Getriebebau NORD are pre-programmed with the factory setting for standard applications with 4-pole standard motors. For use with other motors, the data from the rating plate of the motor must be input into the parameters under the menu item >Motor data<.

Recommendation: It is necessary to input the most precise motor data (rating plate) possible for the correct use of the drive unit. In particular, an automatic stator resistance measurement (P208) should be carried out.

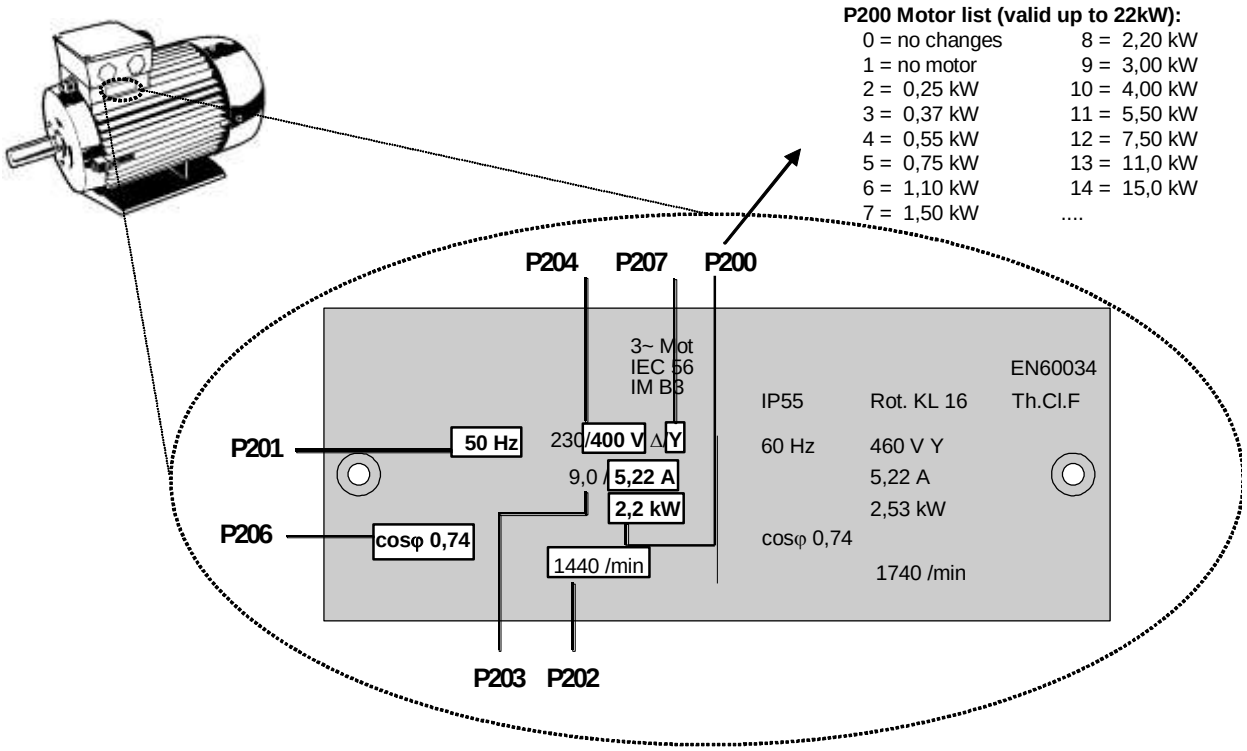

Note: In this example, the motor must be "star" wired (400V, P207 = 0).

The frequency inverter is pre-programmed at the factory for standard applications using 4-pole DC standard motors. If another NORD motor is to be used, it can be selected from a motor list in P200. The data is automatically loaded into parameters P201 – P208 and can be compared again with the data from the motor rating plate.

When using other motors, the data from the rating plate of the motor must be input into parameters P201 to P208.

In order to automatically determine the stator resistance, set P208 = 0 and confirm by pressing "ENTER". The value adjusted to the line resistance will be saved (dependent upon P207).

4.2 Basic operation - Quick start guide

... with ControlBox (Option SK TU1-CTR)

The simplest procedure to prepare the frequency inverter for operation is described below. For this operation, jog frequency (P113) is used. The standard setting only has to be changed in one parameter.

Measure		Key	Display
1.	Connect power supply to the frequency inverter. The operating display changes to the "Operational" mode.		
2.	▲ - Keep pressing the key until menu group P1__ is displayed.	▲	P1__
3.	↵ - Press the key to get into the Basis Parameter menu group.	↵	P100
4.	▲ - Press the key. Parameter No. P101 and the following will be displayed.	▲	P101
5.	▲ - Press the key until parameter P113 >Jog frequency< is displayed.	▲	P113
6.	↵ - Press the key to display the actual frequency setpoint (standard factory setting = 0.0Hz).	↵	0.0
7.	▲ - Press the key to set the required frequency setpoint (e.g. 35.0Hz).	▲	35.0
8.	↵ - Press the key to store the setting.	↵	P113
9.	▼ - Keep pressing the key until the operating display is reached. Or press ▲ and ▼ simultaneously to change directly to the operation display. Use the I key to switch on directly, the frequency inverter then changes directly to the operating display.	▼	
10.	Switch on the frequency inverter using the I key. The motor shaft starts up and indicates that the inverter output frequency is reaching the setpoint of 35Hz. **Note:** The desired value is reached after 1.4 seconds (35Hz / 50Hz x 2s). The standard start-up time is 2 seconds to reach 50Hz (as defined by P102 and P105). The motor speed (i.e. the frequency) can be adjusted directly using the ▲ ▼ keys if necessary. By pressing the ↵ key, the new set value can be saved directly in P113.	I	35.0
11.	Switch off the frequency inverter using the O key. The motor is braked and is brought to a controlled stop (this takes 1.4 seconds). The standard deceleration time is 2 seconds from 50Hz to standstill (defined by P103, P105). **Note:** The inverter always supplies 0Hz for 0.5 seconds after stopping (P559, >DC-Time lag<). If there is a new enable during this period, then this is interrupted.	O	

4.3 Minimum configuration of control connections

... with Basic I/O and ControlBox (Option: SK CU1-BSC + SK TU1-CTR)

If the frequency inverter is to be controlled via the digital and analog inputs, this can be implemented immediately in the delivery condition. Settings are not necessary for the moment.

A prerequisite is the installation of a customer unit, e.g. the Basic I/O as described here.

Minimum circuitry

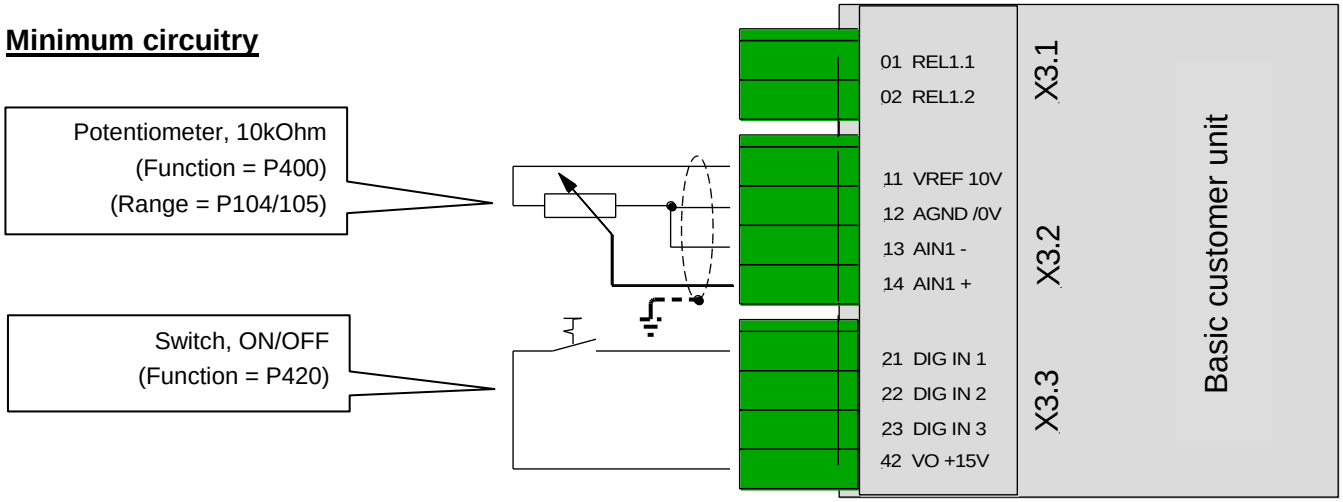

Basic parameters

If the current setting of the frequency inverter is not known, loading the factory data is recommended → P523. The frequency inverter is parameterised for standard applications in this configuration. If necessary, the following parameters can be modified (with the Option ControlBox).

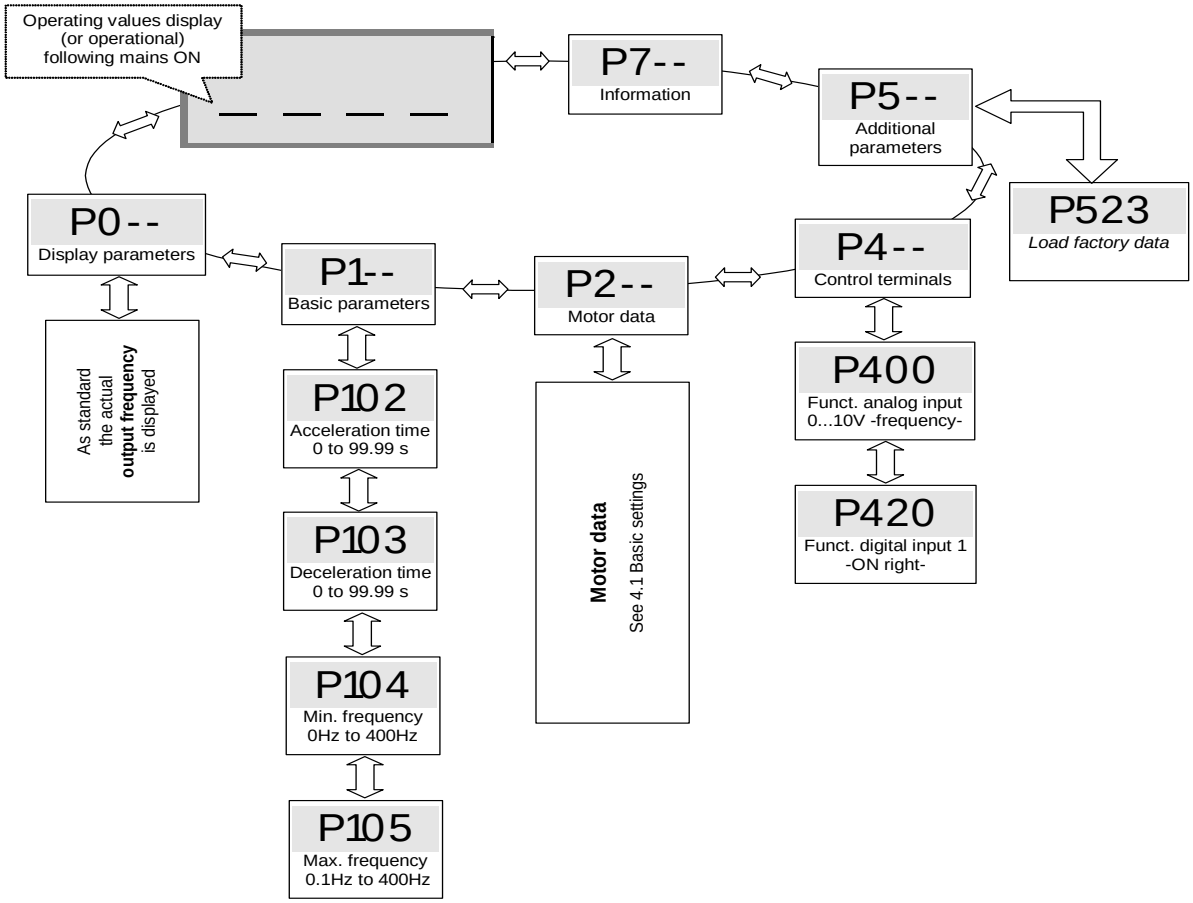

5 Parameterisation

There are four switchable parameter sets available during operation. All parameters are always visible. All parameters can be adjusted "online".

Note: As there are dependencies between the parameters, it is possible for invalid internal data and operating faults to be generated temporarily. Only the inactive parameters should be adjusted during operation.

The individual parameters are combined in various parameter sets. The first digit of the parameter number indicates the assignment to a **menu group**:

The following main functions are assigned to the menu groups:

Menu group	No.	Master function
Operating displays	**(P0--):**	For the selection of the physical units of the display value.
Basic parameters	**(P1--):**	Contain the basic inverter settings, e.g. switch on and switch off procedures and, along with the motor data, are sufficient for standard applications.
Motor / characteristic curve parameters	**(P2--):**	Settings for the motor-specific data, important for ISD current control, and selection of characteristic curve during the setting of dynamic and static boost.
Speed control **(only with the special extension units: PosiCon or Encoder)**	**(P3--):**	Settings for the control parameters (current controller, speed controller, etc.) with speed feedback.
Control clamps	**(P4--):**	Scaling of the analog inputs and outputs, determining the function of the digital inputs and relay outputs, as well as control parameters.
Extra functions	**(P5--):**	Functions dealing with e.g. the interface, pulse frequency or error acknowledgement.
Positioning parameters **(only with the special extension unit: PosiCon)**	**(P6--):**	Positioning parameters for the PosiCon option → see BU 0710!
Information	**(P7--):**	Display of e.g. actual operating values, old error messages, device status reports or software version.
P5--, P6-- and P7-- parameters		Some parameters in these groups can be programmed and read in several levels (arrays).

Note: Parameter P523 can be used to load the factory settings for all parameters at any time. This can be helpful, e.g. during the commissioning of a frequency inverter whose parameters no longer correspond with the factory settings.

Attention: All parameter settings will be lost, if P523= 1 is set and confirmed with "ENTER".

To safeguard the actual parameter settings, these can be transferred to the ControlBox or ParameterBox memories.

Availability of the parameters

Different parameters can be seen and edited when specific customer units and special extension units are used. The following tables (Chap. 5.1...) list all parameters with information regarding which option they are visible with.

example

Parameter	Setting value / Description / Note	Available with option					
P000 (P)	**Operating display**	**BSC**	**STD**	**MLT**	**BUS**	**POS**	**ENC**
	Only with the Option ControlBox according to selection in P001. The operating parameter selected in P001 will be displayed here.						

Parameter text

Parameter dependent on parameter set

Parameter number

BSC = Basic I/O

STD = Standard I/O

MLT = Multi I/O or Multi I/O 20mA

BUS = Bus customer units

POS = Positioning module

ENC = Incremental encoder module

5.1 Parameter description

Abbreviations: **(P) =** Parameter set dependent, these parameters can be set in various ways in the four parameter sets.
FI = Frequency inverter

5.1.1 Operating displays

Parameter	Setting value / Description / Note	Available with option
P000	**Operating displays**	**always visible**
	Only with the Option ControlBox according to selection in P001. The operating parameter selected in P001 will be displayed here.	
P001	**Selection of displayed value**	**always visible**
0 ... 17 [0]	**0 = Actual frequency [Hz**], is the actual output frequency being supplied by the FI. **1 = Speed [1/min],** is the actual rotation speed as calculated by the FI. **2 = Set frequency [Hz]:** the output frequency equivalent to the actual setpoint. This need not match the actual output frequency. **3 = Current [A]:** the actual output current measured by the FI. **4 = Torque current [A]:** the torque-developing output current of the FI. **5 = Voltage [Vac]**, the actual alternating voltage being output by the FI. **6 = DC-Link voltage [Vdc]**: the FI-internal DC voltage. Amongst other things, this depends on the level of the mains voltage. **7 = cos φ**: the actual calculated value of the power factor. **8 = Apparent power [kVA]:** the actual apparent power calculated by the FI. **9 = Effective power [kW]:** the actual effective power calculated by the FI. **10 = Torque [%]:** the actual torque calculated by the FI. **11 = Field [%]:** the actual field in the motor calculated by the FI. **12 = On-time**: time that voltage is applied to the FI network. **13 = Run-time:** time that the FI is enabled. **14 = Analog input 1 [%]:** actual value present at analog input 1 of the FI. **15 = Analog input 2 [%]:** actual value present at analog input 2 of the FI. **16 = Position setpoint** **, desired control position. **17 = Position current value** **, actual position of the drive. *) Only with SK CU1-MLT customer unit. **) Only with the special extension unit *PosiCon*.	
P002	**Display factor**	**Always visible**
0.01 ... 999.99 [1.00]	The operating value in parameter P001 >Selection of operating value display< is scaled with the scaling factor and displayed in P000. It is therefore possible to display system-specific operating values such as bottles per hour.	

5.1.2 Basic parameters

Parameter	Setting value / Description / Note	Available in Option
P100	**Parameter set**	**always visible**
0 ... 3 [0]	Selection of the parameters sets to be parameterised. 4 parameter sets are available. All parameter set-dependent parameters are identified by **(P).** The selection of the operating parameter set is done via a digital input or the Bus control. Switching can take place during operation (online).	

Setting	Digital input function [8]	Digital input function [17]	Display ControlBox
0 = Parameter set 1	LOW	LOW	1 2
1 = Parameter set 2	HIGH	LOW	1 2
2 = Parameter set 3	LOW	HIGH	1 2
3 = Parameter set 4	HIGH	HIGH	1 2

If enabled via the keyboard (ControlBox, PotentiometerBox or ParameterBox), the operating parameter set will match the settings in P100.

P101	**Copy parameter set**	**always visible**
0 ... 4 [0]	After confirmation with the ENTER key, a copy of the parameter set selected in P100 >Parameter set< is written to the parameter set dependent on the value selected here **0 =** Results in no action. **1 =** Copies the active parameter set to parameter set 1 **2 =** Copies the active parameter set to parameter set 2 **3 =** Copies the active parameter set to parameter set 3 **4 =** Copies the active parameter set to parameter set 4	
P102 (P)	**Acceleration time**	**always visible**
0 ... 320.00 s [2.00] > 11kW [3.00] > 22kW [5.00]	Acceleration time is the time corresponding to the linear frequency rise from 0Hz to the set maximum frequency (P105). If an actual setpoint of <100% is being used, the acceleration time is reduced linearly according to the setpoint set. The start-up time can be extended by certain circumstances, e.g. FI overload, setpoint lag, rounding or if the current limit is reached.	
P103 (P)	**Deceleration time**	**always visible**
0 ... 320.00 s [2.00] > 11kW [3.00] > 22kW [5.00]	Deceleration time is the time corresponding to the linear frequency reduction from the set maximum frequency to 0Hz (P105). If an actual setpoint <100% is being used, the deceleration time reduces accordingly. The deceleration time can be extended by certain circumstances, e.g. by the selected >Switch-off mode< (P108) or >Ramp smoothing< (P106).	
P104 (P)	**Minimum frequency**	**always visible**
0.0 ... 400.0 Hz [0.0]	The minimum frequency is the frequency supplied by the FI as soon as it is enabled and no additional setpoint is set. In combination with other setpoints (e.g. analog setpoint or fixed frequencies) these are added to the set minimum frequency. This frequency is undershot when a) the drive is accelerated from standstill. b) The FI is blocked. The frequency then reduces to the absolute minimum (P505) before it is blocked. c) The FI is reversing. The reverse in the rotation field takes place at the absolute minimum frequency (P505). This frequency can be continuously undershot if, during acceleration or deceleration, the function "Maintain frequency" (Function Digital input = 9) is executed.	

Parameter	Setting value / Description / Note	Available in Option
P105 (P)	**Maximum frequency**	**always visible**
0.1 ... 400.0 Hz [50.0]	The frequency supplied by the FI after being enabled and once the maximum setpoint is present, e.g. analog setpoint as per P403, a correspondingly fixed frequency or maximum via the ControlBox. This frequency can only be overshot by the slip compensation (P212), the function "Maintain frequency" (function digital input = 9) or a change to another parameter set with lower maximum frequency.	
P106 (P)	**Ramp smoothing**	**always visible**
0 ... 100 % [0]	This parameter enables a smoothing of the acceleration and deceleration ramps. This is necessary for applications where gentle, but dynamic speed change is important. Ramp smoothing is carried out for every setpoint change. The value to be set is based on the set acceleration and deceleration time, however values <10% have no effect. The following then applies for the entire acceleration or deceleration time, including rounding:	

$$t_{tot\ \ ACCELERATION\,TIME} = t_{P102} + t_{P102} \cdot \frac{P106\,[\%]}{100\%}$$

$$t_{tot\ \ DECELERATION\,TIME} = t_{P102} + t_{P102} \cdot \frac{P106\,[\%]}{100\%}$$

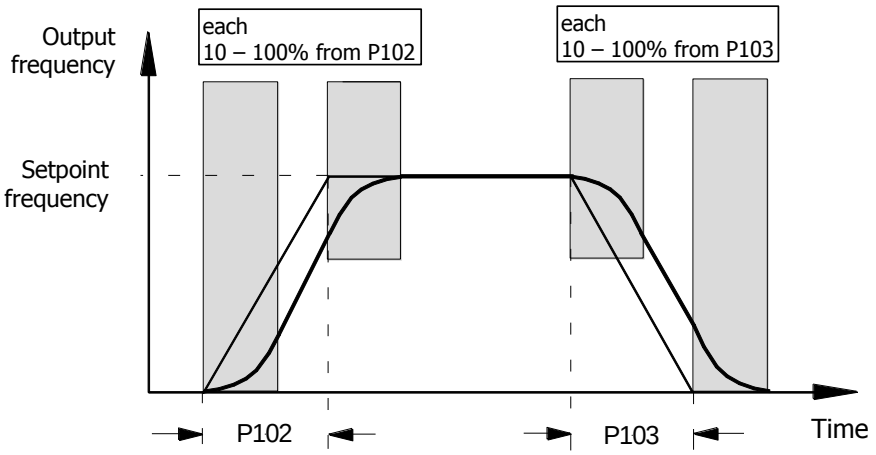

Parameter	Setting value / Description / Note	Available in Option
P107 (P)	**Brake reaction time**	**always visible**
0 ... 2.50 s [0.00]	Electromagnetic brakes have a physically-dependent delayed reaction time when actuated. This can lead to load drops during lifting applications, as the brake delays in taking over the load. This reaction time can be taken into account under parameter P107 (Braking control). Within the adjustable application time, the FI supplies the set absolute minimum frequency (P505) and so prevents movement against the brake and load drop when stopping. See also the parameter >Release time< P114 **Note:** For the control of electromagnetic braking (especially for lifting operations) an internal relay should be used, → Function 1, external brake (P434/441). The minimum absolute frequency (P505) should never be less than 2.0Hz.	

Recommendation for applications:
Lifting equipment with brake, without speed feedback

P114 = 0.2...0.3sec.
P107 = 0.2...0.3sec.
P201…P208 = Motor data
P434 = 1 (ext. brake)
P505 = 2...4Hz

for safe start-up
P112 = 401 (off)
P536 = 2.1 (off)
P537 = 0 (off)
P539 = 2/3 (I_{SD} monitoring)

against load drops
P214 = 50...100% (precontrol)

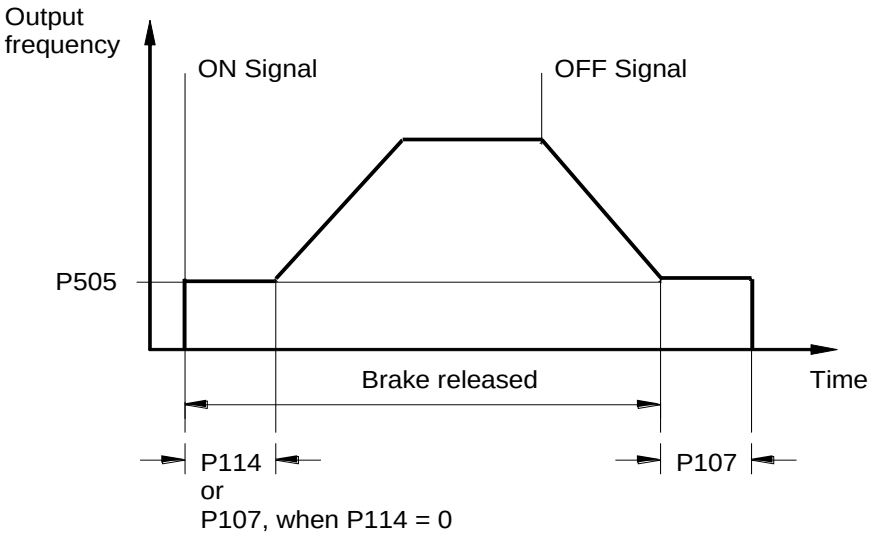

Note: When the brake ventilation time is set (P107 / P114), the brake is only triggered when at least a ¼ of the nominal magnetising current flows (P209). The static boost P120 is correspondingly taken into account with values < 100%.

Parameter	Setting value / Description / Note	Available in Option
P108 (P)	**Disconnection mode**	**always visible**
0 ... 12 [1]	This parameter determines the manner in which the output frequency is reduced after "Blocking" (controller enable → low). **0 = Voltage disable:** The output signal is switched off immediately. The FI no longer supplies an output frequency. In this case, the motor is braked only by mechanical friction. Immediate switching on again of the FI can lead to error switch off. **1 = Ramp down:** The actual output frequency is reduced proportionally to the remaining braking time from P103. **2 = Delayed ramping:** as with ramp, however for generational operation the brake ramp is extended, or for static operation the output frequency is increased. Under certain conditions, this function can prevent overload switch off or reduce brake resistance power dissipation. **Note:** This function must not be programmed if defined deceleration is required, e.g. with lifting mechanisms. **3 = Instant DC braking:** The FI switches immediately to the preselected DC current (P109). This DC current is supplied for the remaining proportion of the >DC brake time< (P110). Depending on the relationship, actual output frequency to max. frequency (P105), the >Time DC brake on< is shortened. The time taken for the motor to stop depends on the application. The time taken to stop depends on the mass inertia of the load and the DC set (P109). With this type of braking, no energy is returned to the FI; heat loss occurs mainly in the motor rotor. **4 = Constant brake distance:** The brake ramp is delayed in starting if the equipment is <u>not</u> being driven at the maximum output frequency (P105). This leads to a similar braking distance from various frequencies. **Note:** This function cannot be used as a positioning function. This function should not be used with a ramp rounding (P106). **5 = Combined braking:** Dependent on the actual link voltage (CLV), a high frequency voltage is switched to the basic mode (linear characteristic curves only, P211 = 0 and P212 = 0). The deceleration time is retained where possible (P103). → additional motor warming! **6 = Quadratic ramp:** The braking ramp does not have a linear course, but is square. **7 = Quadratic ramp with delay:** Combination of functions 2 and 6 **8 = Quadratic combined braking:** Combination of functions 5 and 6 **9 = Constant acceleration power:** Only applies in field weakening range! The drive is accelerated and braked using constant electrical power. The course of the ramps depends on the load. **10 = Distance calculator:** Constant distance between actual frequency / speed and the set minimum output frequency (P104). **11 = Constant acceleration power with delay:** Combination of functions 2 and 9. **12 = Constant acceleration power with delay (as 11) with additional chopper relief**	
P109 (P)	**DC brake current**	**always visible**
0 ... 250 % [100]	Current setting for the functions of DC current braking (P108 = 3) and combined braking (P108 = 5). The correct setting value depends on the mechanical load and the required deceleration time. A higher setting brings large loads to a standstill more quickly. A setting of 100% corresponds to a current value as set in parameter P203.	
P110 (P)	**Time DC-brake on**	**always visible**
0.00 ... 60.00 s [2.0]	The time during which the motor has the current selected in parameter >DC brake current< applied to it during the DC braking functions (P108 = 3). Depending on the relationship, actual output frequency to max. frequency (P105), the >Time DC brake on< is shortened. The time starts running with the removal of the enable and can be interrupted by fresh enabling.	
P111 (P)	**P -factor torque limit**	**always visible**
25 ... 400 % [100]	Directly affects the behaviour of the drive at torque limit. The basic setting of 100 % is sufficient for most drive tasks. If values are too high the drive tends to vibrate as it reaches the torque limit. If values are too low, the programmed torque limit can be exceeded.	

Parameter	Setting value / Description / Note	Available in Option
P112 (P)	**Torque current limit**	**always visible**
25 ... 400/ 401 % [401]	With this parameter, a limit value for the torque-generating current can be set. This can prevent mechanical overloading of the drive. It cannot provide any protection against mechanical blockages (movement to stops). A slipping clutch which acts as a safety device must be provided. The torque current limit can also be set over an infinite range of settings using an analog input. The maximum setpoint (compare adjustment 100%, P403/P408) then corresponds to the value set in P112. The limit value 20% of torque current cannot be undershot by a smaller analog setpoint (P400/405 = 2) (with P300 = 1, not below 10%)! **401% = OFF** is for switching the torque current limit off! This is also the basic setting for the FI. **Note:** For lifting gear applications, no torque limitation must be provided and the parameter (P112) must be left at the works setting!	
P113 (P)	**Jog frequency**	**always visible**
-400.0 ... 400.0 Hz [0.0]	When using the **ControlBox** or **ParameterBox** to control the FI, the jog frequency is the starting value following successful enable. Alternatively, when control is via the control terminals, the jog frequency can be activated via one of the digital inputs. The setting of the jog frequency can be done directly via this parameter or, if the FI is enabled via the keyboard, by pressing the ENTER key. In this case, the actual output frequency is set in parameter P113 and is then available for the next start. **Note:** Specified setpoints via the control terminals, e.g. jog frequency, fixed frequencies or analog setpoints, are generally added with the correct sign. The set maximum frequency (P105) cannot be exceeded and the minimum frequency (P104) cannot be undershot.	
P114 (P)	**Brake delay off**	**always visible**
0 ... 2.50 s [0.00]	Electromagnetic brakes have a delayed reaction time during ventilation, which depends on physical factors. This can lead to the motor running while the brake is still applied, which will cause the inverter to switch off with an overcurrent report. This ventilation time can be taken into account in parameter P114 (Braking control). During the adjustable ventilation time, the FI supplies the set absolute minimum frequency (P505) thus preventing movement against the brake. See also the parameter >Brake reaction time< P107 (setting example). **Note:** If the brake ventilation time is set to "0", then P107 is the brake ventilation and reaction time.	

5.1.3 Motor data / characteristic curve parameters

Parameter	Setting value / Description / Note	Available with option
P200 (P)	**Motor list**	**always visible**
0 ... 32 / 27 [0]	With this parameter, the motor data presets can be changed. The default setting is a 4 pole DC standard motor with the nominal FI power. Select one of the possible digits and press the ENTER key to set all of the following motor parameters (P201 to P209). The motor data is based on 4-pole DC standard motors. Only relevant power outputs for the corresponding FI outputs are shown.	

NOTE:
Settings for devices **1.5...22kW**

0 = No change to data			
1 = No motor *	**9 = 3,0 kW**	**18 = 0,25 PS**	**26 = 7 PS**
2 = 0,25 kW	**10 = 4,0 kW**	**19 = 0,5 PS**	**27 = 10 PS**
3 = 0,37 kW	**11 = 5,5 KW**	**20 = 0,75 PS**	**28 = 15 PS**
4 = 0,55 kW	**12 = 7,5 kW**	**21 = 1,0 PS**	**29 = 20 PS**
5 = 0,75 kW	**13 = 11 kW**	**22 = 1,5 PS**	**30 = 25 PS**
6 = 1,1 kW	**14 = 15 kW**	**23 = 2,0 PS**	**31 = 30 PS**
7 = 1,5 kW	**15 = 18,5 kW**	**24 = 3,0 PS**	**32 = 40 PS**
8 = 2,2 kW	**16 = 22 kW**	**25 = 5,0 PS**	
	17 = 30 kW		

NOTE:
Settings for devices **30...160kW**

0 = No change to data			
1 = No motor *	**8 = 45 kW**	**15 = 15 PS**	**22 = 75 PS**
2 = 11 kW	**9 = 55 kW**	**16 = 20 PS**	**23 = 100 PS**
3 = 15 kW	**10 = 75 kW**	**17 = 25 PS**	**24 = 120 PS**
4 = 18,5 kW	**11 = 90 kW**	**18 = 30 PS**	**25 = 150 PS**
5 = 22 kW	**12 = 110 kW**	**19 = 40 PS**	**26 = 180 PS**
6 = 30 kW	**13 = 132 kW**	**20 = 50 PS**	**27 = 220 PS**
7 = 37 kW	**14 = 160 kW**	**21 = 60 PS**	

Note: Control of the motor set is possible via parameter P205 (P200 is reset to 0 after input confirmation).

*) With an input value of 1 (= **no motor**), a mains simulation can be parameterised. This requires the following data to be set: 50.0Hz / 1500 rpm / 15.00A / 400V / cos φ=0.90 / Stator resistance 0.01Ω In this setting, the inverter operates without current control, slip compensation and pre-magnetising time, and is therefore not recommended for motor applications. Possible applications are induction furnaces or other applications with coils and transformers.

P201 (P)	**Nominal frequency**	**always visible**
20.0...399.9 [***]	The motor nominal frequency determines the V/f break point at which the FI supplies the nominal voltage (P204) at the output.	
P202 (P)	**Nominal speed**	**always visible**
300...24000 rpm [***]	The nominal motor speed is important for the correct calculation and control of the motor slip and the speed display (P001 = 1).	
P203 (P)	**Nominal current**	**always visible**
0.1...540.0 A [***]	The nominal motor current is a decisive parameter for the current vector control.	
P204 (P)	**Nominal voltage**	**always visible**
100...800 V [***]	The >Nominal voltage< matches the mains voltage to the motor voltage. In combination with the nominal frequency, the voltage/frequency characteristic curve is produced.	
P205 (P)	**Nominal power**	**always visible**
0.00... 315 kW [***]	The motor nominal power controls the motor set via P200.	

*** These setting values are dependent on the selection in parameter P200.

Parameter	Setting value / Description / Note	Available with option
P206 (P)	**cos φ**	**always visible**
0.50...0.90 [***]	The motor cos φ is a decisive parameter for the current vector control.	
P207 (P)	**Star Delta connection**	**always visible**
0 ... 1 [***]	**0 = Star** **1 = Delta** The motor circuit is decisive for stator resistance measurement and therefore for current vector control.	
P208 (P)	**Stator resistance**	**always visible**
0.00...300.00 Ω [***]	Motor stator resistance ⇒ line resistance with a DC motor. Has a direct influence on the current control of the FI. Too high a value will lead to a possible overcurrent; too low a value to a motor torque that is too low. For simple measurement, this parameter can be set to "Zero". Pressing the ENTER key initiates the automatic measurement between two motor phases. In the FI, the resistance on the line is measured on the basis of the delta or star circuit (P207) and the value saved. **Note:** For correct function of the current vector control, the stator resistance must be automatically measured by the FI. **The motor must not be disconnected from the FI during the measurement!**	
P209 (P)	**No load current**	**always visible**
0.1...540.0 A [***]	This value is always calculated automatically from the motor data if there is a change in the parameter >cos φ< P206 and the parameter >Nominal current< P203. **Note:** If the value is to be entered directly, then it must be set as the last motor data. This is the only way to ensure that the value will not be overwritten.	
P210 (P)	**Static boost**	**always visible**
0 ... 400 % [100]	The static boost affects the current that generates the magnetic field. This is equivalent to the no load current of the respective motor and is therefore load-independent. The no load current is calculated using the motor data. The factory setting of 100% is sufficient for normal applications.	
P211 (P)	**Dynamic boost**	**always visible**
0 ... 150 % [100]	The dynamic boost affects the torque generating current and is therefore a load-dependent parameter. The factory 100% setting is also sufficient for typical applications. Too high a value can lead to overcurrent in the FI. Under load, the output current is raised too much. Too low a value will lead to insufficient torque.	
P212 (P)	**Slip compensation**	**always visible**
0 ... 150 % [100]	The slip compensation increases the output frequency, dependent on load, to keep the DC asynchronous motor speed approximately constant. The factory setting of 100% is optimal when using DC asynchronous motors and correct motor data has been set. If **several motors** (different loads or outputs) are operated with one FI, the slip compensation P212 must be set to 0%. This excludes any negative influences. This is equally valid for **synchronous motors** that do not have slip due to their design.	
P213 (P)	**ISD control loop gain**	**always visible**
25 ... 400 % [100]	This parameter influences the control dynamics of the FI current vector control (ISD control). Higher settings make the controller faster, lower settings slower. Dependent on application type, this parameter can be altered, e.g. to avoid unstable operation	
P214 (P)	**Torque precontrol**	**always visible**
-200 ... 200 % [0]	This function allows a value for the expected torque requirement to be set in the controller. This function can be used in lifting applications for a better load transfer during start-up. **Note:** Motor torques (with rotation field R) are entered with a positive sign, generator torques (with rotation field L) are entered with a negative sign.	

*** These setting values are dependent on the selection in parameter P200.

Parameter	Setting value / Description / Note	Available with option
P215 (P)	**Boost precontrol**	**always visible**
0 ... 200 % [0]	**Only use with linear characteristic curve (P211 = 0% and P212 = 0%).** With active ISD control (P211 und P212 ≠ 0) this parameter (P215) must remain as "0" in order to prevent a negative influence on the ISD control. For drives that require a high starting torque, this parameter provides an option for switching in an additional current during the start phase. The application time is limited and can be selected at parameter >Time boost precontrol< P216. All current and torque current limits which may have been set (P112, P536, P537) are deactivated during the boost lead time.	
P216 (P)	**Time boost precontrol**	**always visible**
0.0 ... 10.0 s [0]	**Only with linear characteristic curve (P211 = 0% and P212 = 0%).** Application time for increased starting current.	
P217	**Oscillation damping**	**always visible**
10 ... 400 % [10]	With the oscillation damping, idling current harmonics can be damped. Parameter 217 is a measure of the damping power. For oscillation damping the oscillation component is filtered out of the torque current by means of a high pass filter. This is amplified by P217, inverted and switched to the output frequency. The limit for the value switched is also proportional to P217. The time constant for the high pass filter depends on P213. For higher values of P213 the time constant is lower. With a set value of 10% for P217, a maximum of ± 0.045Hz are switched in. At 400% in P217, this corresponds to ± 1.8Hz The function is not active in “Servo mode, P300”.	
P218	**Modulation depth**	**always visible**
50 ... 110 % [100]	The modulation depth can be changed between 50% and 110%. Values under 100% limit the voltage at the motor to smaller values than the mains voltage. This is not feasible for typical applications with three-phase asynchronous motors. Values greater than 100% increase the voltage available at the output, but also the current harmonics, which can lead to oscillation in some motors.	
P2xx		

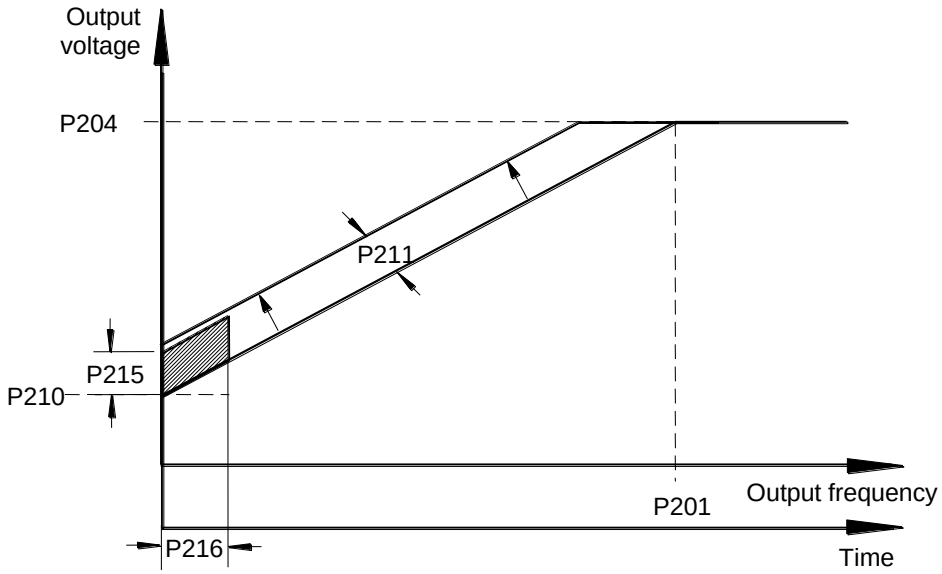

Note: "Typical" setting for the:

Parameter	Setting value / Description / Note	Available with option
	Current vector control (factory setting)	**Linear V/f characteristic curve**
	P201 to P208 = Motor data	P201 to P208 = Motor data
	P210 = 100%	P210 = 100% (static boost)
	P211 = 100%	P211 = 0%
	P212 = 100%	P212 = 0%
	P213 = 100%	P213 = 100% (no significance)
	P214 = 0%	P214 = 0% (no significance)
	P215 = no significance	P215 = 0% (dynamic boost)
	P216 = no significance	P216 = 0s (time dyn. boost)

5.1.4 Control parameters

Parameter	Setting value / Description / Note	Available with option					
P300 (P)	**Servo mode**					**ENC**	**POS**
0...1 [0]	Activates the speed control with speed measurement via the incremental encoder with the special extension units *PosiCon* or *Encoder* (SK XU1-ENC, ...-POS). **Note:** For correct function, the encoder must be connected to the special extension unit (see Encoder connection, Chap. 3.3 or 3.5) and the increment number entered in parameter P301.						
P301	**Incremental encoder**					**ENC**	**POS**
0...17 [6]	Input of the pulse-count per rotation of the connected encoder. If the encoder rotation direction is not the same as the FI, (depending on installation and wiring), it can be compensated for by selecting the corresponding negative increment numbers 8....15. **0 =** 500 pulses **1 =** 512 pulses **2 =** 1000 pulses **3 =** 1024 pulses **4 =** 2000 pulses **5 =** 2048 pulses **6 =** 4096 pulses **7 =** 5000 pulses **17 =** + 8192 pulses **8 =** - 500 pulses **9 =** - 512 pulses **10 =** - 1000 pulses **11 =** - 1024 pulses **12 =** - 2000 pulses **13 =** - 2048 pulses **14 =** - 4096 pulses **15 =** - 5000 pulses **16 =** - 8192 pulses						
P310 (P)	**Speed controller P**					**ENC**	**POS**
0...3200 % [100]	P-component of the encoder (proportional amplification). Amplification factor, with which the speed difference is multiplied from the setpoint and actual frequency. A value of 100% means that a speed difference of 10% produces a setpoint of 10%. Values that are too high can cause the output speed to oscillate.						
P311 (P)	**Speed controller I**					**ENC**	**POS**
0...800 % / ms [20]	I-component of the encoder (Integration component). The integration component of the controller completely eliminates any control deviation. The value indicates how large the setpoint change is per ms. Values that are too small cause the controller to slow down (reset time is too long).						
P312 (P)	**Torque current controller P**					**ENC**	**POS**
0...800 % [200]	Current controller for the torque current. The higher the current controller parameters are set, the more precisely the current setpoint is maintained. Excessively high values in P312 generally lead to high-frequency vibrations at low speeds, on the other hand, excessively high values in P313 generally produce low frequency vibrations across the whole speed range. If the value "Zero" is entered in P312 and P313, then the torque current control is switched off. In this case, only the motor model precontrol is used.						
P313 (P)	**Torque current controller I**					**ENC**	**POS**
0...800 % / ms [125]	I-component of the torque current controller. (See also P312 >Torque current controller P<)						
P314 (P)	**Torque current controller limit**					**ENC**	**POS**
0...400 V [400]	Determines the maximum voltage increase of the torque current controller. The higher the value, the greater the maximum effect that can be exercised by the torque current controller. Excessive values in P314 can specifically lead to instability during transition to the field weakening zone (see P320). The values for P314 and P317 should always be set roughly the same, so that the field and torque current controllers are balanced.						

Parameter	Setting value / Description / Note	Available with option					
P315 (P)	**Field current controller P**					**ENC**	**POS**
0...800 % [200]	Current controller for the field current. The higher the current controller parameters are set, the more precisely the current setpoint is maintained. Excessively high values for P315 generally lead to high frequency vibrations at low speeds. On the other hand, excessively high values in P316 generally produce low frequency vibrations across the whole speed range If the value "Zero" is entered in P315 and P316, then the field current controller is switched off. In this case, only the motor model precontrol is used.						
P316 (P)	**Field current controller I**					**ENC**	**POS**
0...800 % / ms [125]	I-component of the field current controller. See also P315 >Field current controller P<						
P317 (P)	**Field current controller limit**					**ENC**	**POS**
0...400 V [400]	Determines the maximum voltage increase of the torque current controller. The higher the value, the greater is the maximum effect that can be exercised by the field current controller. Excessive values in P317 can specifically lead to instability during transition to the field reduction range (see P320). The values for P314 and P317 should always be set roughly the same, so that the field and torque current controllers are balanced.						
P318 (P)	**P-Weak**					**ENC**	**POS**
0...800 % [150]	The field weakening controller reduces the field setpoint when the synchronous speed is exceeded. Generally, the field weakening controller has no function; for this reason, the field weakening controller only needs to be set if speeds are set above the nominal motor speed. Excessive values for P318 / P319 will lead to controller oscillations. The field is not weakened sufficiently if the values are too small or during dynamic acceleration and/or delay times. The downstream current controller can no longer read the current setpoint.						
P319 (P)	**I-Weak**					**ENC**	**POS**
0...800 % / ms [20]	Affects only the field weakening range, see P318 >Field weakening controller P<						
P320 (P)	**Weak Border**					**ENC**	**POS**
0...110 % [100]	The field weakening limit determines at which speed / current the controller will begin to weaken the field. At a set value of 100% the controller will begin to weaken the field at approximately the synchronous speed. If values much larger than the standard values have been set in P314 and/or P317, then the field weakening limit should be correspondingly reduced, so that the control range is actually available to the current controller.						
P321 (P)	**Speed control I brake off**					**ENC**	**POS**
0... 4 [0]	During brake ventilation time (P107/P114), the I-component of the speed controller is increased. This leads to better load take-up, especially with vertical movements. **0 =** Speedctrl I*1 **1 =** Speedctrl I*2 **3 =** Speedctrl I*8 **2 =** Speedctrl I*4 **4 =** Speedctrl I*16						
P325	**Function encoder**					**ENC**	**POS**
0...4 [0]	The actual speed value supplied by an incremental encoder to the FI can be used for various functions in the FI. **0 = Speed measurement Servo mode:** The actual motor speed value is used for the FI servo mode. The ISD control cannot be switched off in this function. **1 = PID actual frequency value:** The actual speed of a system is used for speed control. This function can also be used for controlling a motor with a linear characteristic curve. It is also possible to use an incremental encoder for speed control that is not mounted directly onto the motor. P413 – P416 determine the control. **2 = Frequency addition:** The speed determined is added to the current setpoint value. **3 = Frequency subtraction**: The speed determined is subtracted from the actual setpoint. **4 = Maximum frequency**: The maximum possible output frequency / speed is limited by the speed of the encoder.						

Parameter	Setting value / Description / Note	Available with option					
P326	**Ratio encoder**					**ENC**	**POS**
0.01...200.0 [1.00]	If the incremental encoder is not mounted directly onto the motor shaft, then the respectively correct transformation ratio of motor speed to encoder speed must be set. $P326 = \frac{\text{Motor speed}}{\text{Encoder speed}}$ Only when P325 = 1, 2, 3 or 4, therefore not in Servo mode (motor speed control)						
P327	**Speed slip error**					**ENC**	**POS**
0...3000 min^{-1} [0]	The limit value for a permitted maximum slip error can be set. If this value is reached, the FI switches off and indicates error E013.1. **0 =** OFF Only when P325 = 0, therefore in Servo mode (motor speed control)						
P330	**Digital input function 13**					**ENC**	
0...3 [0]	**0 = Off:** No function, input is switched off. **1 = Servo Mode On / Off:** Activation and deactivation of the Servo mode using an external signal (High level = active). For this P300 = 1 (Servo mode = On). **2 = Sensor monitoring:** A connected incremental encoder receives a fault signal and indicates fault functions like e.g. break in the supply line or light source failure. The FI shows Error 13, Encoder error, if there is an error. **3 = PTC resistor input:** Analog evaluation of the present signal switching threshold, approx. 2.5 Volt.						

5.1.5 Control terminals

Parameter	Setting value / Description / Note	Available with option					
P400	**Analog 1 input function**	**BSC**	**STD**	**MLT**			
0...18 [1]	The FI analog input can be used for various functions. It must be noted that only one of the functions given below is possible at any time. **0 =** **Off,** the analog input has no function. After the FI has been enabled via the control terminals, it will supply the set minimum frequency (P104). **1 =** **Nominal frequency,** the given analog range (P402/P403) varies the output frequency between the set minimum and maximum frequencies (P104/P105). **2 =** **Torque current limit,** based on the set torque current limit (P112), this can be altered by means of an analog value. 100% setpoint here corresponds to the set torque current limit P112. 20% cannot be undershot (with P300=1, not below 10%)! **3 =** **PID current frequency *,** is required to build up a control loop. The analog input (actual value) is compared with the setpoint (e.g. fixed frequency). The output frequency is adjusted as far as possible until the actual value equals the setpoint. (see Control variables P413 – P415) **4 =** **Frequency addition** *, the supplied frequency value is added to the setpoint. **5 =** **Frequency subtraction***, the supplied frequency value is subtracted from the setpoint. **6 =** **Current limit,** based on the set current limit (P536), this can be altered via the analog input. **7 =** **Maximum frequency**, the maximum frequency of the FI is set in the analog range. 100% corresponds to the setting in parameter P411. 0% corresponds to the setting in parameter P410. The values for the min/max output frequency (P104/P105) cannot be exceeded or undershot. **8 =** **PID limited current frequency *,** like Function 3, PID current frequency, however the output frequency cannot fall below the programmed minimum frequency value in Parameter P104. (no change to rotation direction) **9 =** **PID supervised current frequency *,** like Function 3, PID current frequency, however the FI switches the output frequency off when the minimum frequency P104 is reached. **10 =** **Servo-Mode Torque**, in the Servo mode the motor torque can be set using this function. **11 =** **Pre-tension Torque,** function that enables a value for the anticipated torque requirement to be entered in the controller (interference factor switching). This function can be used to improve the load take-up of lift equipment with separate load detection. **12 =** Reserved **13 =** **Multiplication**, the setpoint is multiplied with the analog value supplied. The analog value adjusted to 100% then corresponds to a multiplication factor of 1. **14 =** **Current value process controller *,** activates the process controller, analog input 1 is connected to the actual value encoder (compensator, air can, flow volume meter, etc.). The mode (0-10 V or 0/4-20 mA) is set in P401. **15 =** **Process controller setpoint *:** Like Function 14, however the setpoint is specified (e.g. by a potentiometer). The actual value must be specified using another input. **16 =** **Process controller precontrol *:** Adds an adjustable additional setpoint after the process controller Further details regarding the process controller can be found in Chapter 8.2 **17 =** Reserved **18 =** **Curve travel control:** The slave transmits its actual speed to the master via the analog input (or BUS, P547/548). This then calculates the actual setpoint speed from its own speed, the slave speed and the guideline speed so that neither of the two drives travel faster in the curve than the guideline speed. ***)** The limits of these values are set by the parameters >Minimum frequency auxiliary setpoints< P410 and >Maximum frequency auxiliary setpoints< P411.						

Parameter	Setting value / Description / Note	Available with option					
P401	**Mode analog input 1**	**BSC**	**STD**	**MLT**			
0...3 [0]	**0 =** **0 – 10V limited:** An analog setpoint smaller than the programmed adjustment 0% (P402) does not lead to undershooting of the programmed minimum frequency (P104). Therefore does not lead to any rotation direction reversal.						
	1 = **0 - 10V:** If a setpoint smaller than the programmed adjustment 0% (P402) is present, this can cause a change in direction rotation. This allows rotation direction reversal using a simple voltage source and potentiometer. E.g. internal setpoint with rotation direction change: P402 = 5V, P104 = 0Hz, Potentiometer 0–10V ⇒ Rotation direction change at 5V in mid-range setting of the potentiometer. During the reversing moment (hysteresis = ± P505), the drive stands still when the minimum frequency (P104) is smaller than the absolute minimum frequency (P505). A brake that is controlled by the FI will have entered the hysteresis range. If the minimum frequency (P104) is greater than the absolute minimum frequency (P505), the drive reverses when the minimum frequency is reached. In the hysteresis range ± P104, the FI supplies the minimum frequency (P104), the brake controlled by the FI does not enter the range.						
	2 = **0 – 10V controled:** If the minimum adjusted setpoint (P402) is undershot by 10% of the difference value from P403 and P402, the FI output switches off. Once the setpoint is greater than [*P402 - (10% * (P403 - P402))]*, it will deliver an output signal again. 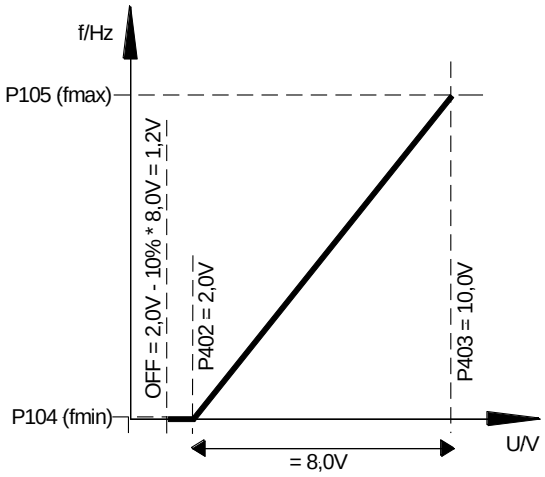 **Example setpoint 4-20mA:** P402: Adjustment 0% = 1V; P403: Adjustment 100% = 5V; -10% corresponds to -0.4V; i.e. 1...5V (4...20mA) normal operating zone, 0.6...1V = minimum frequency setpoint, below 0.6V (2.4mA) output switches off.						
	3 = **- 10V – 10V:** If a setpoint smaller than the programmed adjustment 0% (P402) is present, this can cause a change in direction rotation. This allows rotation direction reversal using a simple voltage source and potentiometer. E.g. internal setpoint with rotation direction change: P402 = 5V, P104 = 0Hz, Potentiometer 0–10V ⇒ Rotation direction change at 5V in mid-range setting of the potentiometer. During the reversing moment (hysteresis = ± P505), the drive stands still when the minimum frequency (P104) is smaller than the absolute minimum frequency (P505). A brake that is controlled by the FI will not have entered the hysteresis range. If the minimum frequency (P104) is greater than the absolute minimum frequency (P505), the drive reverses when the minimum frequency is reached. In the hysteresis range ± P104, the FI supplies the minimum frequency (P104), the brake controlled by the FI does not enter the range.						
P402	**Adjustment 1 0%**	**BSC**	**STD**	**MLT**			
-50.0 ... 50.0 V [0.0]	This parameter is used to set the voltage corresponding to the minimum value of the selected function for analog input 1. In the factory setting (setpoint) this value is equivalent to the setpoint set via P104 >Minimum frequency<. Typical setpoints and corresponding settings: 0 – 10V → 0.0 V 2 – 10 V → 2.0 V (for function 0-10 V monitored) 0 – 20 mA → 0.0 V (internal resistance approx. 250Ω) 4 – 20 mA → 1.0 V (internal resistance approx. 250Ω)						

Parameter	Setting value / Description / Note	Available with option					
P403	**Adjustment 1 100%**	**BSC**	**STD**	**MLT**			
-50.0 ... 50.0 V [10.0]	This parameter is used to set the voltage corresponding to the maximum value of the selected function for analog input 1. In the factory setting (setpoint) this value is corresponds with the setpoint set via P105 >Maximum frequency<. Typical setpoints and corresponding settings: 0 – 10 V → 10.0 V 2 – 10 V → 10.0 V (for function 0-10 V monitored) 0 – 20 mA → 5.0 V (internal resistance approx. 250Ω) 4 – 20 mA → 5.0 V (internal resistance approx. 250Ω)						

P400 ... P403

P401 = 0 → 0–10V limited

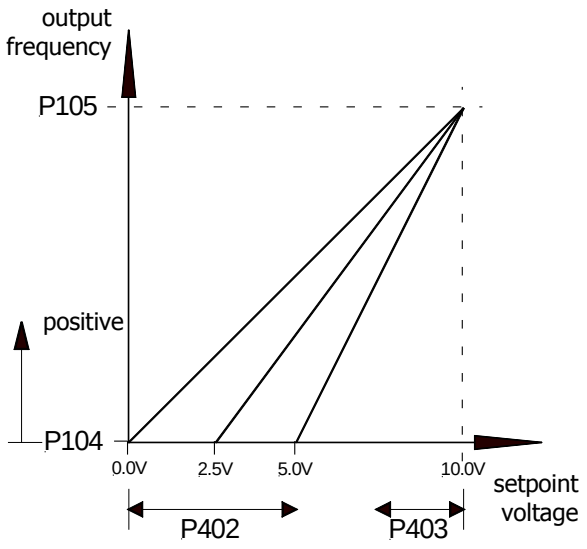

P401 = 1 → 0–10V not limited

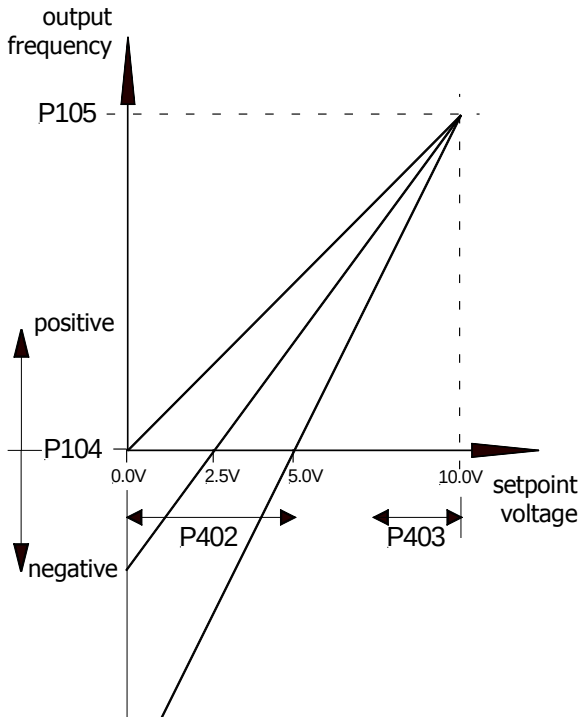

P404	**Filter analog input 1**	**BSC**	**STD**	**MLT**			
10 ... 400 ms [100]	Adjustable digital low-pass filter for the analog signal. Interference peaks are hidden, the reaction time is extended.						
P405	**Analog 2 input function**			**MLT**			
0...18 [0]	*This parameter is identical to P400, but refers to P406, P407, P408, P409.*						
P406	**Mode analog input 2**			**MLT**			
0...3 [0]	**This parameter is identical to P401, but refers to P405, P407, P408, P409.**						
P407	**Adjustment 2 0%**			**MLT**			
-50.0 ... 50.0 V [0.0]	*This parameter is identical to P402, but refers to P405, P406, P408, P409.*						
P408	**Adjustment 2 100%**			**MLT**			
-50.0 ... 50.0 V [10.0]	*This parameter is identical to P403, but refers to P405, P406, P407, P409.*						
P409	**Filter analog input 2**			**MLT**			
10 ... 400 ms [100]	*This parameter is identical to P404, but refers to P405, P406, P407, P408.*						

Parameter	Setting value / Description / Note	Available with option
P410 (P)	**Minimum frequency analog input 1/2**	**always visible**
0.0 ... 400.0 Hz [0.0]	The minimum frequency that can act on the setpoint via the auxiliary setpoints. Auxiliary setpoints are all frequencies that have also been entered into the inverter for additional functions. Actual frequency PID; Frequency addition; Frequency subtraction; Auxiliary setpoints via BUS; Minimum frequency above analog setpoint (potentiometer); Process controller	
P411 (P)	**Maximum frequency analog input 1/2**	**always visible**
0.0 ... 400.0 Hz [50.0]	The maximum frequency that can act on the setpoint via the auxiliary setpoints. Auxiliary setpoints are all frequencies that have also been entered into the inverter for additional functions. Actual frequency PID; Frequency addition; Frequency subtraction; Auxiliary setpoints via BUS; Maximum frequency above analog setpoint (potentiometer); Process controller	
P412 (P)	**Nominal value process controller**	**always visible**
0.0 ... 10.0 V [5.0]	Fixed specification of a setpoint for the process controller that will only occasionally be altered. Only with P400 = 14 ... 16 (process controller). Further details can be found in Chap. 8.2	
P413 (P)	**PID control P-component**	**always visible**
0 ... 400.0 % [10.0]	Only effective if the function Actual frequency PID is selected. The P-component of the PID controller determines the frequency jump if there is a rule deviation based on the rule difference. For example: At a setting of P413 = 10% and a rule difference of 50%, 5% is added to the actual setpoint.	
P414 (P)	**PID control I-component**	**always visible**
0 ... 300.0 ‰ / ms [1.0]	Only effective if the function Actual frequency PID is selected. The I-component of the PID controller determines the frequency change, dependent on time.	
P415 (P)	**PID control D-component**	**always visible**
0 ... 400.0 %ms [1.0]	Only effective if the function Actual frequency PID is selected. If there is a rule deviation, the D-component of the PID controller determines the frequency change multiplied by time.	
P416 (P)	**Ramptime PID setpoint**	**always visible**
0 ... 99.99s [2.00]	Only effective when the function Actual frequency PID is selected. Ramp for PID setpoint	

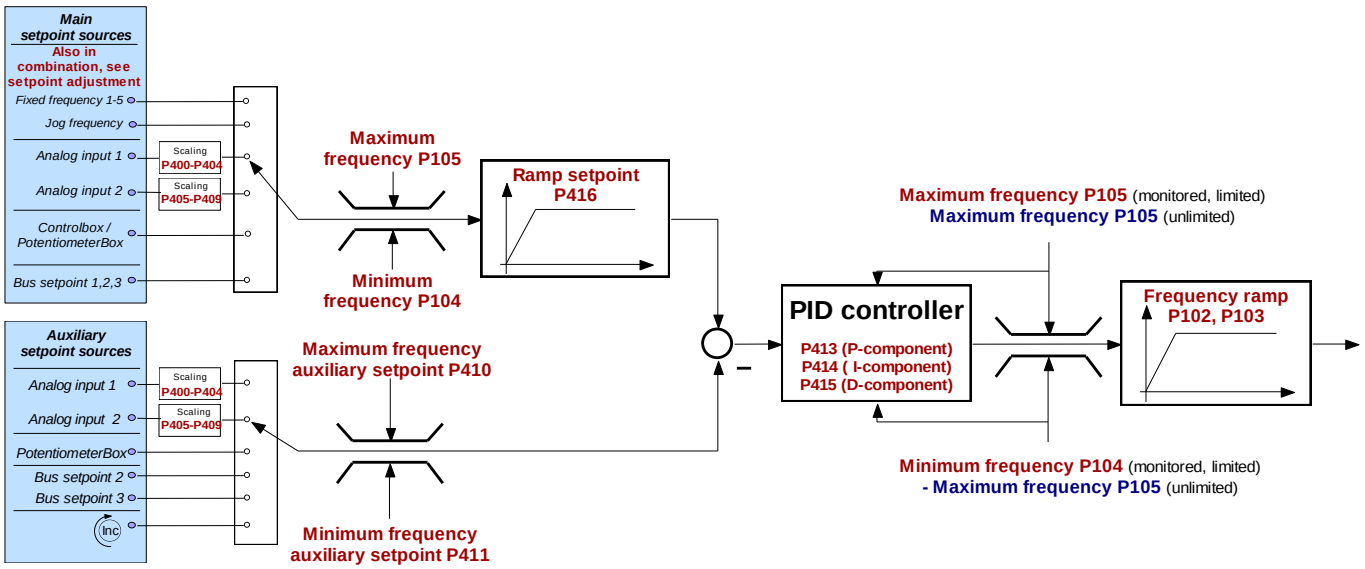

P417 (P)	**Offset analog output 1**		**STD**	**MLT**			
-10.0 ... +10.0 V [0.0]	In the analog output function an offset can be entered to simplify the processing of the analog signal in other equipment. If the analog output has been programmed with a digital function, then the difference between the switch-on point and the switch-off point can be set in this parameter (hysteresis).						

Parameter	Setting value / Description / Note	Available with option					
P418 (P)	**Analog 1 output function**		**STD**	**MLT**			
0 ... 52 [0]	**Analog functions** An analog voltage (0 to + 10 V) can be taken from the control terminals (max. 5 mA). Various functions are available, whereby: 0 Volt analog voltage always corresponds to 0% of the selected value. 10 Volt corresponds to the current motor nominal value multiplied by the standardisation factor P419, like e.g.: $\Rightarrow 10\text{Volt} = \frac{\text{motor nominal value} \cdot \text{P419}}{100\%}$ **0 = No function**, no output signal at terminals. **1 = Actual frequency**, the analog voltage is proportional to the frequency at the FI output. **2 = Speed**, this is the synchronous speed calculated by the FI based on the existing setpoint. Load-dependent speed fluctuations are not taken into account. If Servo mode is being used (P300), the measured speed will be output via this function. **3 = Current**, the effective value of the output current supplied by the FI. **4 = Torque current,** displays the motor load torque calculated by the FI. **5 = Voltage**, the output voltage supplied by the FI. **6 = DC-Link voltage,** the DC voltage in the FI. This is not based on the motor rated data. 10 Volt, standardised at 100%, is equivalent to 850 Volt DC! **7 = Value of P542**, the analog output can be set using parameter P542 independently of the actual operating status of the FI. During Bus control this function can supply such things as an analog value from the control. **8 = Apparent power:** the actual apparent power calculated by the FI. **9 = Effective power:** the actual effective power calculated by the FI. **10 = Torque [%]:** the actual torque calculated by the FI. **11 = Field [%]:** the actual field in the motor calculated by the FI. **12 = Current frequency +/-,** the analog voltage is proportional to the output frequency of the FI, whereby the zero point is shifted to 5V. For rotation to the right, values between 5V and 10V are output, and for rotation to the left values between 5V and 0V. **13 = Speed +/-,** is the synchronic rotation speed calculated by the FI, based on the current setpoint, whereby the zero point has been shifted to 5V. For rotation to the right, values between 5V and 10V are output, and for rotation to the left values between 5V and 0V. If Servo mode is being used, the **measured speed** will be output via this function. **14 = Torque [%]+/-**, is the actual torque calculated by the FI, whereby the zero point is shifted to 5V. For drive torques, values between 5V and 10V are output, and for generator torque, values between 5V and 0V. **30 = Setpoint frequency before ramp**, displays the frequency produced by any upstream controllers (ISD, PID, etc.). This is then the setpoint frequency for the power stage after it has been adjusted by the start-up or braking ramp (P102, P103). **Digital functions:** All relay functions described in Parameter >Function Relay 1< P434 can also be transferred via the analog output. If a condition has been fulfilled, then there will be 10V at the output terminals. Negation of the function can be set in parameter >Analog output standardisation< P419. **15 =** External brake **16 =** Inverter is working **17 =** Current limit **18 =** Torque current limit **19 =** Frequency limit **20 =** Level with setpoint **21 =** Fault **22 =** Warning **23 =** Overcurrent warning **24 =** Motor overtemp. warning **25 =** Torque current limit **26 =** Value of P541 **27 =** Torque current limit gen. **28 =** ... 29 reserved **31 =** ... 43 reserved **44 =** Bus In Bit 0 **45 =** Bus In Bit 1 **46 =** Bus In Bit 2 **47 =** Bus In Bit 3 **48 =** Bus In Bit 4 **49 =** Bus In Bit 5 **50 =** Bus In Bit 6 **51 =** Bus In Bit 7 **52 =** Output via Bus PZD						

Parameter	Setting value / Description / Note	Available with option					
P419 (P)	**Normalising analog output 1**		**STD**	**MLT**			
-500 ... 500 % [100]	**Analog functions P418 (= 0 ... 14, 30)** Using this parameter an adjustment can be made to the analog output for the selected operating zone. The maximum analog output (10V) corresponds to the standardisation value of the appropriate selection. If therefore, at a constant working point, this parameter is raised from 100% to 200%, the analog output voltage is halved. 10 Volt output signal then corresponds to twice the nominal value. For negative values the logic is reversed. A setpoint value of 0% will then produce 10V at the output and 100% will produce 0V. **Digital functions P418 (= 15 ... 27, 44 ... 52)** The switching threshold can be set using this parameter for the functions Current limit (= 17), Torque current limit (= 18) and Frequency limit (= 19). A value of 100% refers to the corresponding motor nominal value (see also P435). With a negative value, the output function is output negated (0/1 → 1/0).						
P420	**Digital input 1**	**BSC**	**STD**	**MLT**	**BUS**		
0 ... 48 [1]	**Enable right** as factory setting Various functions can be programmed. These can be seen in the following table.						
P421	**Digital input 2**	**BSC**	**STD**	**MLT**			
0 ... 48 [2]	**Enable left** as factory setting Various functions can be programmed. These can be seen in the following table.						
P422	**Digital input 3**	**BSC**	**STD**	**MLT**			
0 ... 48 [8]	**Parameter set switching** as factory setting Various functions can be programmed. These can be seen in the following table.						
P423	**Digital input 4**		**STD**	**MLT**			
0 ... 48 [4]	**Fixed frequency 1** as factory setting Various functions can be programmed. These can be taken from the following table.						
P424	**Digital input 5**			**MLT**			
0 ... 25 [0]	**No function** as factory setting Various functions can be programmed. These can be seen in the following table.						
P425	**Digital input 6**			**MLT**			
0 ... 25 [0]	**No function** as factory setting Various functions can be programmed. These can be seen in the following table.						

List of the possible functions of the digital inputs P420 ... P425

Value	Function	Description	Signal
0	No function	Input switched off.	---
1	Enable right	FI supplies output signal, rotation field right (if setpoint positive). 0 → 1 Flank (P428 = 0)	High
2	Enable left	FI supplies output signal, rotation field left (if setpoint positive). 0 → 1 Flank (P428 = 0)	High
	If automatic start-up is active (P428 = 1), a high level is sufficient. If the functions "Enabled right" and "Enabled left" are actuated simultaneously, the FI is blocked		
3	Change rotation direction	Causes the rotation field to change direction (combined with Enable right or left).	High
4	Fixed frequency 1 [1]	The frequency from P429 is added to the setpoint value.	High
5	Fixed frequency 2 [1]	The frequency from P430 is added to the setpoint value.	High
6	Fixed frequency 3 [1]	The frequency from P431 is added to the setpoint value.	High
7	Fixed frequency 4 [1]	The frequency from P432 is added to the setpoint value.	High
	If several fixed frequencies are actuated at the same time, then they are added with the correct sign. In addition, the analog setpoint (including minimum frequency) is added.		
8	Parameter set switch Bit 0	Selection of the active Bit 0 parameter set (see P100)	High
9	Maintain the frequency	During the start-up or braking phase, a low level will cause the output frequency to be "held". A high level allows the ramp to proceed.	Low
10	Voltage disable [2]	The FI output voltage is switched off and the motor runs freely to a stop.	Low
11	Quick stop [2]	The inverter reduces the frequency according to the programmed emergency stop time (P426).	Low
12	Fault acknowledgement 2	Error acknowledgement with an external signal. If this function is not programmed, an error can also be acknowledged by a low enable setting.	0→1 Flank
13	PTC resistor input [2]	Analog evaluation of the present signal switching threshold, approx. 2.5 Volt. 2sec delayed E002 message.	Analog
14	Remote control	With Bus system control, low level switches the control to control via control terminals.	High
15	Jog frequency	This frequency fixed value can be set using the HIGHER / LOWER and ENTER keys.	High
16	Motor potentiometer	As setting value **09**, is however not maintained below the minimum frequency and above the maximum frequency.	Low
17	Parameter set switch Bit 1	Selection of the active parameter set Bit 2 (see P100).	High
18	Watchdog [2]	Input must see a high flank cyclically (P460), otherwise error E012 will cause a shutdown. Starting is with the first high flank.	0→1 Flank
19	Setpoint 1 on/off	Analog input switch-on and switch-off 1 (High = ON)	High
20	Setpoint 2 on/off	Analog input switch-on and switch-off 2 (High = ON)	High
21	Fixed frequency 5 [1]	The frequency from P433 is added to the setpoint.	High
22	Approach reference point	PosiCon option (see manual BU 0710)	High
23	Reference Point	PosiCon option (see manual BU 0710)	High
24	Teach-In	PosiCon option (see manual BU 0710)	High
25	Quit Teach-In	PosiCon option (see manual BU 0710)	High
	These functions are only available with the PosiCon Special Extension Unit!		

... continued on the next page

Value	Function	Description	Signal
26	Torque current limit [2 3 5]	Adjustable load limit, the output frequency is reduced when it is reached. → P112	analog
27	Actual PID frequency [2 3 4 5]	Possible actual value feedback for PID controller	analog
28	Frequency addition [2 3 4 5]	Addition to other frequency setpoint values	analog
29	Frequency subtraction [2 3 4 5]	Subtraction from other frequency setpoint values	analog
	Digital inputs can be used for simple analog signals (max. 7 Bit resolution).		
30	PID Control on/off [5]	Switching the PID controller function on and off (High = ON)	High
31	Enable right blocked [5]	Blocks the >Enable right/left< via a digital input or Bus control. Does not depend on the actual direction of rotation of the motor (e.g. following negated setpoint).	Low
32	Enable left blocked [5]		low
33	Current limit [2 3 5]	Based on the set current limit (P536), this can be changed using the digital/analog input.	analog
34	Maximum frequency [2 3 4 5]	The maximum frequency of the FI is set in the analog range. 100% corresponds to the setting in parameter P411. 0% corresponds to the setting in parameter P410. The values for the min/max output frequency (P104/P105) cannot be exceeded or undershot.	analog
35	Actual frequency PID controller limited [2 3 4 5]	Needed to build up a control loop. The digital/analog input (actual value) is compared with the setpoint (e.g. other analog input or fixed frequency). The output frequency is adjusted as far as possible until the actual value equals the setpoint. (see control variables P413 – P416) The output frequency cannot fall below the programmed minimum frequency value in parameter P104. (No rotation direction change!)	analog
36	Actual frequency PID controller monitored [2 3 4 5]	Like function 35, but the FI switches the output frequency off when the >Minimum frequency< P104 is reached.	analog
37	Torque Servo mode [2 3 5]	The motor torque can be set or limited via this function in Servo mode.	analog
38	Precontrol torque [2 3 5]	Function that enables a value for the anticipated torque requirement to be entered in the controller (interference factor switching) This function can be used to improve the load take-up of lift equipment with separate load detection. → P214	analog
39	Multiplication [3 5]	This factor multiplies the master setpoint value.	analog
40	Current value process controller [3 5]	like P400 = 14-16 Further details regarding the process controller can be found in Chapter 8.2	analog
41	Setpoint value process controller [3 5]		analog
42	Precontrol process controller [3 5]		analog
	Digital inputs can be used for simple analog signals (max. 7 Bit).		
47	Motor potentiometer frequency + [5]	If the FI is enabled (R or L), the output frequency can be infinitely varied with a high signal. To save an actual output frequency in P113, both inputs must be set to a high potential simultaneously for 1s. This value then applies as the next starting value during Enable when the same direction sign has been selected. Otherwise start with be with f_{MIN} (P104).	High
48	Motor potentiometer frequency - [5]		High

[1] If neither of the digital inputs are programmed for left or right enable, then the actuation of a fixed frequency or jog frequency will enable the inverter. The rotation field direction depends on the sign of the setpoint.

[2] Also effective for Bus control (RS485, CANnord, CANopen, DeviceNet, Profibus DP, InterBus, RS232)

[3] Functions only available for Basic and Standard I/O, analog setpoints are processed. They are suitable for simple requirements (7 bit resolution).

[4] The limits of these values are set by the parameters >Minimum frequency auxiliary setpoints< P410 and >Maximum frequency auxiliary setpoints< P411.

[5] Settings are not available with P424 and P425 (Multi I/O).

Parameter	Setting value / Description / Note	Available with option					
P426 (P)	**Quick stop time**	**always visible**					
0 ...320.00 s [0.1] or [1.0]	Braking time setting for the emergency stop function, which can be triggered by digital input, bus control, keyboard or automatically in the case of an error. Emergency stop time is the time for the linear frequency decrease from the set maximum frequency (P105) to 0Hz. If an actual setpoint <100% is being used, the emergency stop time is reduced correspondingly.						
P427	**Quick stop on error**	**always visible**					
0 ... 3 [0]	Activation of automatic emergency stop following error **0 = OFF:** Automatic emergency stop following error is deactivated **1 = On mains failure:** Automatic emergency stop following mains supply failure **2 = On errors:** Automatic emergency stop following fault **3 = Error on mains supply failure:** Automatic emergency stop following mains supply failure and error						
P428 (P)	**Automatic starting**	**always visible**					
0 ... 1 [0]	In the standard setting (P428 = **0 → Off**) the inverter requires a flank for enable (signal change from "low → high") at the applicable digital input. In the setting **On → 1** the FI reacts to a high level. In certain cases, the FI must start up directly when the mains are switched on. This means that P428 = **1 → On** can be set. If the enable signal is permanently switched on, or equipped with a cable jumper, the FI starts up immediately. This function is only possible if the FI is controlled using the digital inputs. (siehe P509)						
P429 (P)	**Fixed frequency 1**	**BSC**	**STD**	**MLT**	**BUS**		
-400 ... 400 Hz [0]	Settings for the fixed frequency. Following actuation via a digital input and enabling of the FI (right or left), the fixed frequency is used as a setpoint. A negative setting value will cause a direction change (based on the *Enable rotation direction* P420 – P425). If several fixed frequencies are actuated at the same time, then the individual values are added with the correct sign. This also applies to combinations with the jog frequency (P113), analog setpoint (if P400 = 1) or minimum frequency (P104). The frequency limits (P104 = f_{min}, P105 = f_{max}) cannot be over or undershot. If none of the digital inputs are programmed for enable (right or left), the simple fixed frequency signal leads to an enable. A positive fixed frequency corresponds to a right enable, negative left enable.						
P430 (P)	**Fixed frequency 2**	**BSC**	**STD**	**MLT**	**BUS**		
-400 ... 400 Hz [0]	Function description of parameter, see **P429 >Fixed frequency 1<**						
P431 (P)	**Fixed frequency 3**	**BSC**	**STD**	**MLT**	**BUS**		
-400 ... 400 Hz [0]	Function description of parameter, see **P429 >Fixed frequency 1<**						
P432 (P)	**Fixed frequency 4**	**BSC**	**STD**	**MLT**	**BUS**		
-400 ... 400 Hz [0]	Function description of parameter, see **P429 >Fixed frequency 1<**						
P433 (P)	**Fixed frequency 5**	**BSC**	**STD**	**MLT**	**BUS**		
-400 ... 400 Hz [0]	Function description of parameter, see **P429 >Fixed frequency 1<**						

Parameter	Setting value / Description / Note	Available with option					
P434 (P)	**Relay function 1**	**BSC**	**STD**	**MLT**	**BUS**		
0 ... 38	Functions for the signal relay 1 (Control terminals 1 / 2)						
[1]	The settings 3 to 5 and 11 work with 10% hysteresis, i.e. the relay contact closes (fct. 11 opens) when the limit value is reached and opens (function 11 closes) when a 10% smaller value is undershot.						

Setting / Function	Relay contact ... for limit value or function (see also P435)
0 = No function	open
1 = External brake, to control a brake on the motor. The relay switches at a programmed absolute minimum frequency (P505). A setpoint delay should be programmed for typical brakes (see P107). A mechanical brake can be directly AC switched. (Please note the technical specifications of the relay contacts)	Closes
2 = Inverter is working, the closed relay contact indicates voltage FI output (U - V - W).	Closes
3 = Current limit, based on the setting of the motor rated current in P203. This value can be adjusted with the standardisation (P435).	Closes
4 = Torque current limit, based on motor data settings in P203 and P206. Signals a corresponding torque load on the motor. This value can be adjusted with the standardisation (P435).	Closes
5 = Frequency limit, based on motor nominal frequency setting in P201. This value can be adjusted with the standardisation (P435).	Closes
6 = Level with setpoint, indicates that the FI has completed the frequency increase or decrease. After the contact has closed, the setpoint must change by at least 1Hz → *setpoint value not reached, contact opens*	Closes
7 = Fault, general error message, error is active or not yet acknowledged. → *Operational – closes* *(Note: Ready does not automatically mean "Ready for switch-on")*	Opens
8 = Warning; total warning, a limit value was reached that could lead to a later shutdown of the FI.	Opens
9 = Overcurrent warning, min. 130% FI nominal current for 30 sec.	Opens
10 = Motor overtemperature motor: The motor temperature is evaluated via a digital input. → Motor is too hot. Warning occurs after 1 seconds, overheating switch off after 2 seconds.	Opens
11 = Torque current limit (warning), The limit value in P112 / P536 is reached. A negative value in P435 inverts the reaction. Hysteresis = 10%.	Opens
12 = Value of P541, using parameter P541 (Bit 0), the relay can be controlled independently of the actual operating status of the FI.	Closes
13 = Torque current limit generally active with ISD control: Limit value in P112 has been reached in the generator range. Hysteresis = 10%; Torque limit gen. active	Closes
14 =... 29 reserved	---
30 =Bus IO In Bit 0 / Bus In Bit 0	Closes
31 =Bus IO In Bit 1 / Bus In Bit 1	Closes
32 =Bus IO In Bit 2 / Bus In Bit 2	Closes
33 =Bus IO In Bit 3 / Bus In Bit 3	Closes
34 =Bus IO In Bit 4 / Bus In Bit 4	Closes
35 =Bus IO In Bit 5 / Bus In Bit 5	Closes
36 =Bus IO In Bit 6 / Bus In Bit 6	Closes
37 =Bus IO In Bit 7 / Bus In Bit 7	Closes
38 =Output via BUS	Closes

Further details in the BUS manuals

Parameter	Setting value / Description / Note	Available with option					
P435 (P)	**Relay 1 scaling**	**BSC**	**STD**	**MLT**	**BUS**		
-400 ... 400 % [100]	Adjustment of the limit values of the relay functions. For a negative value, the output function will be output negative. Current limit = x [%] · P203 >Motor nominal current< Torque current limit = x [%] · P203 · P206 (calculated motor nominal torque) Frequency limit= x [%] · P201 >Motor nominal frequency< Values in the +/-20% range are limited internally to 20%.						
P436 (P)	**Relay 1 hysteresis**	**BSC**	**STD**	**MLT**	**BUS**		
0 ... 100 % [10]	Difference between switch-on and switch-off point to prevent oscillation of the output signal.						
P441 (P)	**Relay 2 function**		**STD**	**MLT**			
0 ... 38 [7]	*This parameter is identical to P434, but refers to P442, P443.*						
P442 (P)	**Relay 2 scaling**		**STD**	**MLT**			
-400 ... 400 % [100]	*This parameter is identical to P435, but refers to P441, P443.*						
P443 (P)	**Relay 2 hysteresis**		**STD**	**MLT**			
0 ... 100 % [10]	*This parameter is identical to P436, but refers to P441, P442.*						
P447 (P)	**Offset analog output 2**			**MLT**			
-10.0 ... 10.0 V [0.0]	*This parameter is identical to P417, but refers to P418, P419.*						
P448 (P)	**Function analog output 2**			**MLT**			
0 ... 52 [0]	*This parameter is identical to P418, but refers to P417, P419.*						
P449 (P)	**Standardisation analog output 2**			**MLT**			
-500 ... 500 % [100]	*This parameter is identical to P419, but refers to P417, P418.*						
P458 **.. - 01** **.. - 02**	**Analog output mode**			**MLT**			
0 ... 1 [0]	**0 =** 0...10V / 0...20mA **1 =** 2...10V / 4...20mA This parameter determines the working range of the respective analog output. Array 01 stands for the 1st analog output, Array 02 for the 2nd.						
P460	**Watchdog time**	**always visible**					
0.0 0.1 ... 250.0 s [10.0]	The time interval between the expected watchdog signals (programmable function of digital inputs P420 ... P425). If this time interval elapses without an impulse being registered, switch off and error message E012 are actuated. **0.0 (customer error):** Customer error function, as soon as a low-high flank is registered at the input, the FI switches off with error E012.						

Parameter	Setting value / Description / Note	Available with option
P480 .. - 01 ... .. - 12	**Function Bus I/O In Bits**	**always visible**
0 ... 62 [12]	The Bus I/O In Bits are perceived as digital inputs. They can be set to the same functions (P420...425). **[01] =** Bus I/O In Bit 1 **[02] =** Bus I/O In Bit 2 **[03] =** Bus I/O In Bit 3 **[04] =** Bus I/O In Bit 4 **[05] =** Bus I/O Initiator 1 **[06] =** Bus I/O Initiator 2 **[07] =** Bus I/O Initiator 3 **[08] =** Bus I/O Initiator 4 The possible functions for the Bus In Bits can be found in the table of functions for the digital inputs P420...425. Further details can be found in the manuals for each Bus system.	
P481 .. - 01 ... .. - 10	**Function Bus I/O Out Bits**	**always visible**
0 ... 38 [10]	The Bus I/O Out Bits are perceived as multi-function relay outputs. They can be set to the same functions (P434...443). **[01] =** Bus I/O Out Bit 1 **[02] =** Bus I/O Out Bit 2 **[03] =** Bus I/O Out Bit 3 **[04] =** Bus I/O Out Bit 4 **[05] =** Bus I/O Actuator 1 **[06] =** Bus I/O Actuator 2 **[07] =** Flag 1 **[08] =** Flag 2 The possible functions for the Bus Out Bits can be found in the table of functions for the relay P434. Further details can be found in the manuals for each Bus system.	
P482 .. - 01 ... .. - 08	**Normalisation Bus I/O Out Bits**	**always visible**
-400 … 400 % [100]	Adjustment of the limit values of the relay functions/Bus Out Bits. For a negative value, the output function will be output negative. When the limit value is reached and the setting values are positive, the relay contact closes, with negative setting values the relay contact opens.	
P483 .. - 01 ... .. - 08	**Hysteresis Bus I/O Out Bits**	**always visible**
1 … 100 % [10]	Difference between switch-on and switch-off point to prevent oscillation of the output signal.	

5.1.6 Extra functions

Parameter	Setting value / Description / Note	Available with option
P503	**Leading function output**	**always visible**
0 ... 8 [0]	To use the *Master function output* the source of FI control must be selected in P509. Only the master frequency (setpoint 1 and control word) is transferred with **Mode 1**, while the actual values selected in P543, P544 and P545 are transferred in **Mode 2**. In **Mode 3** a 32Bit actual position and a 16Bit setpoint speed (after ramp) is output. Mode 3 is required for synchronous control with the PosiCon option. ***Mode 4*** can be used for curve control in torque-coupled vehicles. The status word (1st word), the actual setpoint frequency before the speed ramp (2nd word), the actual torque current standardised to the torque limit (3rd word) and the actual frequency without slip (4th word) are transmitted. **0 = Off** **1 = USS mode 1** **3 = USS mode 2** **5 = USS mode 3** **7 = USS mode 4** **2 = CAN mode 1** up to 250kBaud **4 = CAN mode 2** up to 250kBaud **6 = CAN mode 3** **8 = CAN mode 4** **Note:** Each USS mode prevents communication with a PC and NORDCON.	
P504	**Pulse frequency**	**always visible**
from 1.5 to 7.5 kW 3.0 ... 20.0 kHz [6.0]	The internal pulse frequency for actuating the power component can be changed with this parameter. A high set value leads to less noise from the motor, but also to higher EMC radiation. **Note:** The suppression level limit curve A is reached with the setting of 6kHz. I^2t- characteristic curve FI, raising the pulse frequency leads to a reduction of the output current against time. 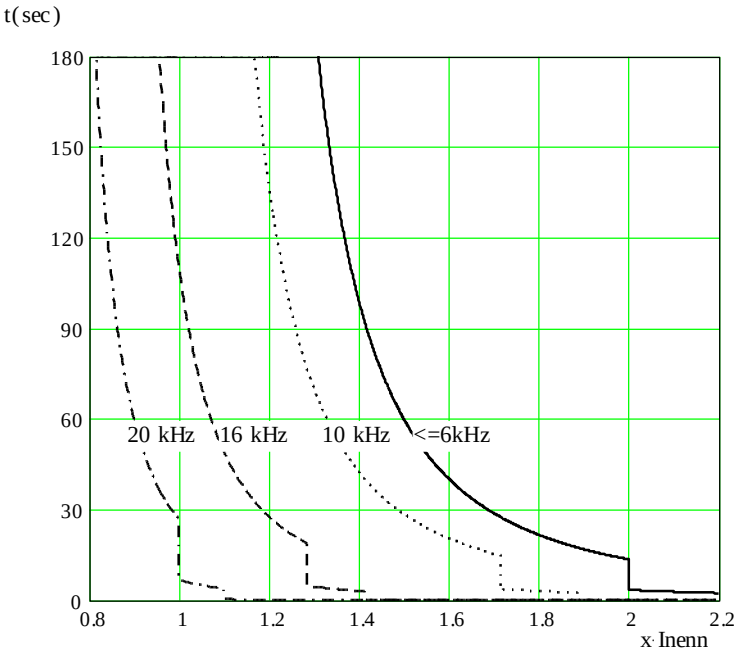	
from 11 to 37 kW 3.0 ... 16.0 kHz [6.0]	**11-37kW:** Adjustable between 3 and 16kHz, standard 6kHz (> 6kHz power reduction in continuous operation)	
from 45 to 160 kW 3.0 ... 8.0 / 4.0 kHz [4.0]	**45-110kW:** Adjustable between 3 and 8kHz, standard 4kHz (> 4kHz power reduction in continuous operation) **132kW/160kW:** only 4kHz can be set	

Parameter	Setting value / Description / Note	Available with option
P505 (P)	**Abs. minimum frequency**	**always visible**
0.0 ... 10.0 Hz [2.0]	Gives the frequency value that cannot be undershot by the inverter. At the absolute minimum frequency, braking control (P434 or P441) and the setpoint delay (P107) are actuated. If a setting value of "Zero" is selected, the brake relay does not switch during reversing. When controlling lift equipment, this value should be set at a minimum of 2.0Hz. From approx. 2Hz the current control of the FI operates and a connected motor can supply sufficient torque.	
P506	**Automatic acknowledgement**	**always visible**
0 ... 7 [0]	In addition to the manual error acknowledgement, an automatic one can also be selected. **0 = Off** **1 ... 5 = Number** of permissible automatic malfunction acknowledgments within one mains-on cycle. After mains off and switch on again, the full amount is again available. **6 = Always**, an error message will always be automatically acknowledged when the cause is no longer present. **7 = ENTER key**, acknowledgement is only possible using the ENTER key or by mains switch-off. No acknowledgement is implemented by removing the enable!	
P507	**PPO type**	**always visible**
1 ... 4 [1]	Only with the Profibus option See also the additional description for the Profibus control - BU 0020 -	
P508	**Profibus address**	**always visible**
1 ... 126 [1]	Profibus address, only with the Profibus option See also the additional description for the Profibus control	

Parameter	Setting value / Description / Note	Available with option
P509	**Interface**	**always visible**
0 ... 21 [0]	Selection of the interface via which the FI is controlled. (P503: Note *Master function output*!) **0 = Control terminals or keyboard control** **/*** with the **Control Box** (Option), the **Parameter Box** (Option, not *ext. p-box*), the **Potentiometer Box** (Option) or via **Bus I/O Bits** (Option) **1 = Control terminals only */***,** the FI can only be controlled via the digital and analog inputs (→ a customer unit is necessary!) or via the **BUS I/O Bits** (Option). **2 = USS setpoint */***, the frequency setpoint is transferred via the RS485 interface. Control via the digital I/Os is still active. **3 = USS control word *,** the control signals (enable, rotation direction, etc.) are transferred via the RS485 interface, the setpoint via the analog input or the fixed frequencies. **4 = USS ***, all control data is transferred via the RS485 interface. The analog and digital inputs have no function. The setting is required for the external p-box! **5 = CAN setpoint */*** (Option) **6 = CAN control word *** (Option) **7 = CAN *** (Option) **8 = Profibus setpoint */*** (Option) **9 = Profibus control word *** (Option) **10 = Profibus *** (Option) **11 = CAN Broadcast *** (Option) **12 = InterBus setpoint */*** (Option) **13 = InterBus control word *** (Option) **14 =** InterBus * (Option) **15 = CANopen setpoint */*** (Option) **16 = CANopen Control word** * (Option) **17 = CANopen** * (Option) **18 = DeviceNet setpoint */*** (Option) **19 =** DeviceNet Control word * (Option) **20 =** DeviceNet * (Option) **21 =** in preparation **Note:** For details about the respective Bus systems: please refer to the respective Options descriptions. BU 0020 = Profibus BU 0050 = USS BU 0060 = CAN/CANopen BU 0070 = InterBus BU 0080 = DeviceNet BU 0090 = AS-Interface *) Keyboard control (ControlBox, ParameterBox, PotentiometerBox) is blocked, parameterisation is still possible. **) If the communication during keyboard control is interrupted (time out 0.5 sec), the FI will block without error message. ***) Permissible settings for using the AS interface.	
P510	**Interface bus setpoints**	**always visible**
0 ... 8 [0]	Selection of the interface via which the FI is controlled. **0 = Auto (=P509):** The source of the auxiliary setpoint is automatically derived from the setting in the parameter P509 >Interface< **1 = USS** **2 = CANbus** **3 = Profibus** **4 = InterBus** **5 = CANopen** **6 = DeviceNet** **7 =** Reserved **8 = CAN Broadcast**	
P511	**USS baud rate**	**always visible**
0 ... 3 [3]	Setting of the transfer rate (transfer speed) via the RS485 interface. All bus subscribers must have the same baud rate setting. **0 =** 4800 baud **1 =** 9600 baud **2 =** 19200 baud **3 =** 38400 baud	
P512	**USS address**	**always visible**
0 ... 30 [0]	Setting for the inverter address.	

Parameter	Setting value / Description / Note	Available with option
P513	**Telegram time-out**	**always visible**
-0.1 / 0.0 / 0.1 ... 100.0 s [0.0]	Monitoring function of the active bus interface. Following receipt of a valid telegram, the next one must arrive within the set period. Otherwise the FI reports an error and switches off with the error message E010 >Bus Time Out<. 0.0 = Off: Monitoring is switched off. -0.1 = no error: Even if communication between BusBox and FI is interrupted (e.g. 24V error, Box removed, etc.), the FI will continue to operate unchanged.	
P514	**CANbus baud rate**	**always visible**
0 ... 7 [4]	Used to set the transfer rate (transfer speed) via the CAN interface. All bus subscribers must have the same baud rate setting. Additional information is contained in the manual BU 0060 CAN/CANopen. **0 =** 10kBaud **3 =** 100kBaud **6 =** 500kBaud **1 =** 20kBaud **4 =** 125kBaud **7 =** 1Mbaud * (test purposes only) **2 =** 50kBaud **5 =** 250kBaud *) Safe operation cannot be guaranteed	
P515	**CANbus address**	**always visible**
0 ... 255 [50]	Setting for the CANbus address.	
P516 (P)	**Skip frequency 1**	**always visible**
0.0 ... 400.0 Hz [0.0]	The output frequency around the frequency value set here is masked. This range is transmitted with the set brake and acceleration ramp; it cannot be continuously supplied to the output. Frequencies below the absolute minimum frequency should not be set. **0 =** Masking frequency inactive	
P517 (P)	**Skip frequency area 1**	**always visible**
0.0 ... 50.0 Hz [2.0]	Masking range for the >Masking frequency 1< P516. This frequency value is added and subtracted from the masking frequency. Masking frequency range 1: P516 - P517 ... P516 + P517	
P518 (P)	**Skip frequency 2**	**always visible**
0.0 ... 400.0 Hz [0.0]	The output frequency around the frequency value set here is masked. This range is transmitted with the set brake and acceleration ramp; it cannot be continuously supplied to the output. **0 =** Masking frequency inactive	
P519 (P)	**Skip frequency area 2**	**always visible**
0.0 ... 50.0 Hz [2.0]	Masking range for the >Masking frequency 2< P518. This frequency value is added and subtracted from the masking frequency. Masking frequency range 2: P518 - P519 ... P518 + P519	
P520 (P)	**Flying start**	**always visible**
0 ... 4 [0]	This function is required to connect the FI to already rotating motors, e.g. in fan drives. Motor frequencies >100Hz are only picked up in speed controlled mode (Servo mode = AN, P300). **0 = Switched off,** no flying start circuit. **1 = Both directions,** the FI looks for a speed in both directions. **2 = Direction of setpoint,** searches only in the direction of the setpoint value present. **3 = Both directions after fault** **4 = Direction of setpoint after fault**	
P521 (P)	**Flying start resolution**	**always visible**
0.02... 2.50 Hz [0.05]	Using this parameter, the flying start circuit increment size can be adjusted. Values that are too large affect accuracy and causes the FI to cut out with an overcurrent report. If the values are too small, the search time is greatly extended.	
P522 (P)	**Flying start offset**	**always visible**
-10.0 ... 10.0 Hz [0.0]	A frequency value that can be added to the frequency value found, e.g. to remain in the motor range and so avoid the generator range and therefore the chopper range.	

Parameter	Setting value / Description / Note	Available with option
P523	**Factory setting**	**always visible**
0 ... 2 [0]	By selecting the appropriate value and confirming it with the ENTER key, the selected parameter range is entered in the factory setting. Once this setting is made, the parameter value automatically changes back to 0. **0 = No change:** Does not change the parameterisation. **1 = Load factory setting:** The complete parameterisation of the FI reverts to the factory setting. All originally parameterised data are lost. **2 = Factory settings without bus:** All parameters of the frequency inverter, with the exception of the Bus parameter, are reset to the factory setting.	
P533	**Factor I^2t-Motor**	**Always visible**
50 ... 150 % [100] *from SW3.4 and above*	The motor current for the I^2t motor monitoring P535 can be weighted with the parameter P533. Larger factors permit larger currents.	
P535	**I^2t motor**	**always visible**
0 ... 1 [0]	When calculating the motor temperature, the output current, time and the output frequency (cooling) are taken into account. If the temperature limit value is reached then switch off occurs and error message E002 (motor overheating) is output. Possible positive or negative acting ambient conditions cannot be taken into account here. **0 = Switched off** **1 = Switched on**	
0 … 24 [0] *from SW3.4 and above*	The I^2t motor function can now be set in a differentiated manner. Up to four curves with three different triggering times can be set. The trigger times are based on classes 5, 10 and 20 for semiconductor switching devices. **Setting 5 corresponds to the previous setting "ON".** All curves run from 0Hz to half of the nominal frequency (P201). From half of the nominal frequency upwards, the full nominal current is available.	

Switch-off class 5, 60s at 1.5x I_N		Switch-off class 10, 120s at 1.5x I_N		Switch-off class 20, 240s at 1.5x I_N	
I_N at 0Hz	**P535**	**I_N at 0Hz**	**P535**	**I_N at 0Hz**	**P535**
100%	1	100%	9	100%	17
90%	2	90%	10	90%	18
80%	3	80%	11	80%	19
70%	4	70%	12	70%	20
60%	5	60%	13	60%	21
50%	6	50%	14	50%	22
40%	7	40%	15	40%	23
30%	8	30%	16	30%	24

P536	**Current limit**	**always visible**
0.1...2.0 / 2.1 (x the FI nominal current) [1.5]	The inverter output current is limited to the set value. (as before "Increase delay") If this limit value is reached, the inverter reduces the actual output frequency. **0,1 - 2,0 = Multiplier** with the inverter nominal current gives the limit value **2,1 = OFF** represents the switching off of this limit value.	
P537	**Pulse disconnection**	**always visible**
0 ... 1 [1]	This function prevents immediate switch-off of the inverter if there is a heavy overload (>200% inverter current). With the current limit switched on the output current is limited to approximately 150% of the inverter nominal current. This limit is brought about by a brief switch-off of the end stage. **0 = Switched off** **1 = Switched on** **Note:** For equipment **from 30kW** the function *Pulse switch-off* **cannot** be switched off.	

Parameter	Setting value / Description / Note	Available with option
P538	**Check input voltage**	**always visible**
0 ... 4 [3]	For safe operation of the FI, the voltage supply must meet a specific quality. If there is a brief interruption of a phase or the voltage supply sinks below a particular limit value, the FI will output an error. Under certain operating conditions, it may be necessary to suppress this error message. In this case, the input monitoring can be adjusted. **0 = Off:** No monitoring of the supply voltage. **1 = Phase failure:** only phase errors will produce an error message. **2 = Low voltage:** only low voltage will produce an error message. **3 = Phase failure and low voltage:** Low voltage and phase error will produce a fault report (Factory setting). **4 = DC supply:** The input voltage is fixed at 480V with direct supply of direct current. Phase error and low mains voltage monitoring are deactivated. **Note:** Operation with unpermitted mains voltages can destroy the frequency inverter!	
P539 (P)	**Check output voltage**	**always visible**
0 ... 3 [0]	This protective function monitors the output current at the U-V-W terminals and checks for plausibility. In cases of error, the error message E016 is output. **0 = Off:** Monitoring is not active. **1 = Motor phases only:** The output current is measured and checked for symmetry. If an imbalance is present, the FI switches off and outputs the error message E016. **2 = Magnetisation only:** At the moment the FI is switched on, the level of the excitation current (field current) is checked. If insufficient excitation current is present, the FI switches off with the error message E016. A motor brake is not released in this phase. **3 = Motor phase and magnetisation:** as 1 and 2 combined **NOTE:** This function can be used as an additional protective function for lifting applications, but is not permissible on its own as protection for persons.	
P540 (P)	**Mode phase sequence**	**always visible**
0 ... 7 [0]	For safety reasons this parameter can be used to prevent a rotation direction reversal and therefore the incorrect rotation direction. **0 = No limitation** **1 = Disable phase sequence key:** The rotation direction key on the ControlBox SK TU1-CTR is blocked. **2 = To the right only *:** Clockwise direction only is possible. The selection of the "incorrect" rotation direction leads to the output of 0Hz. **3 = To the left only *:** Counter-clockwise direction only is possible. The selection of the "incorrect" rotation direction leads to the output of 0Hz. **4 = Enable direction only:** Rotation direction is only possible according to the enable signal, otherwise 0Hz is output. **5 = Right orientation control *:** Clockwise direction only is possible. The selection of the "incorrect" rotation direction leads to the FI switching off. **6 = Left orientation control** *: Counter-clockwise direction only is possible. The selection of the "incorrect" rotation direction leads to the FI switching off. **7 = Enable direction control**: Rotation direction is only possible according to the enable signal, otherwise the FI is switched off. *) Applies to keyboard (SK TU1-) and control terminal actuation, in addition, the direction key on the ControlBox is blocked.	

Parameter	Setting value / Description / Note	Available with option					
P541	**Set relays**	**BSC**	**STD**	**MLT**	**BUS**		
000000 ... 111111 [000000]	This function provides the opportunity to control the relay and the digital outputs independently of the FI status. To do this, the relevant output must be set to the function **External control**. This function is binary coded: Setting range [000000-111111 (Binary)] Bit 0 = Relay 1 Bit 1 = Relay 2 Bit 2 = Analog output 1 (Digital function) Bit 3 = Analog output 2 (Digital function) Bit 4 = Relay 3 Bit 5 = Relay 4 This function can either be used manually or in combination with a Bus control with this parameter (Function test). **BUS:** The corresponding value is written into the parameter, thereby setting the relay and digital outputs. **ControlBox:** The Control Box enables the selection of all output combinations. If only Bits 0 - 3 are to be activated, the selection is displayed in binary code. If the option PosiCon is installed (Bit 4 + 5), the display is coded in hexadecimal. **ParameterBox:** Each individual output can be separately picked and activated.						
P542 **.. - 01** **.. - 02**	**Set analog output 1...2**		**STD**	**MLT**			
0.0 ... 10.0 V [0.0]	This function provides the opportunity to control the analog outputs of the FI (depending on the option) independently of its actual operating status. To do this, the relevant output (P418/P448) must be set to the function **External control** (=7). This function can either be used manually or in combination with a Bus control with this parameter. The value set here will, once confirmed, be output at the analog output . When programming with the ControlBox:						

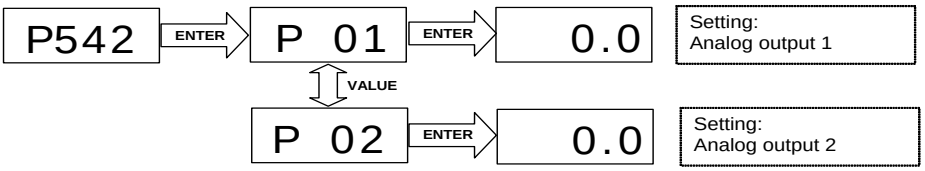

P543 (P)	Bus actual value 1	always visible
0 ... 12 [1]	The return value 1 can be selected for bus actuation in this parameter. **Note:** Further details can be found in the respective BUS operating instructions or in parameter P400. **0 =** Off **1 =** Current frequency **2 =** Current speed **3 =** Current **4 =** Torque current **5 =** State digital IO's [1] **6 =** Current position (with PosiCon, SK 700E only) **7 =** Set position (with PosiCon SK 700E only) **8 =** Nominal frequency **9 =** Error code **10 =** Current position increment [2] (with PosiCon SK 700E only) **11 =** Set position increment [2] (with PosiCon SK 700E only) **12 =** Bus IO Out Bits 1-7	

[1] The assignment of the dig. inputs in P543/ 544/ 545 = 5

Bit 0 = DigIn 1	Bit 1 = DigIn 2	Bit 2 = DigIn 3	Bit 3 = DigIn 4
Bit 4 = DigIn 5	Bit 5 = DigIn 6	Bit 6 = DigIn 7	Bit 7 = DigIn 8
Bit 8 = DigIn 9	Bit 9 = DigIn 10	Bit 10 = DigIn 11	Bit 11 = DigIn 12
Bit 12 = Rel 1	Bit 13 = Rel 2	Bit 14 = Rel 3	Bit 15 = Rel 4

[2] The setpoint/actual position corresponding to an 8192 increment encoder. According to the setting in (P546) 16 Bit or 32 Bit setpoint position) the setting to 16 Bit or 32 Bit values is carried out automatically.

Parameter	Setting value / Description / Note	Available with option
P544 (P)	**Bus actual value 2**	**always visible**
0 ... 12 [0]	This parameter is identical to P543. Condition is PPO 2 or PPO 4 type (P507).	
P545 (P)	**Bus actual value 3**	**always visible**
0 ... 12 [0]	This parameter is identical to P543. Condition is PPO 2 or PPO 4 type (P507). **Note:** For the selection (P546 = {3} or {6} (32 Bit setpoint position) (P454) is not available.	
P546 (P)	**Function bus setpoint 1**	**POS**
0 ... 7 [1]	In this parameter, a function is allocated to the output setpoint 1 during bus actuation. **Note:** Further details can be found in the respective BUS instruction manuals. **0 =** Off **1 =** Setpoint frequency (16 Bit) **2 =** 16 Bit setpoint position (only with Option PosiCon, SK 700E) **3 =** 32 Bit setpoint position (only with Option *PosiCon*, *SK 700E* and when PPO type 2 or 4 has been selected) **4 =** Control terminals PosiCon (only with Option PosiCon, SK 700E, 16Bit) **5 =** Setpoint position (16 Bit) increment 2 (only with PosiCon SK 700E) **6 =** Setpoint position (32 Bit) increment 2 (only with PosiCon SK 700E) **7 =** Bus IO In Bits 0-7	
P547 (P)	**Function bus setpoint 2**	**always visible**
0 ... 20 [0]	In this parameter, a function is allocated to the output setpoint 2 during bus actuation. **NOTE:** Further details can be found in the respective BUS operating instructions or in the description of P400. **0 =** Off **1 =** Setpoint frequency **2 =** Torque current limit **3 =** Actual frequency PID **4 =** Frequency addition **5 =** Frequency subtraction **6 =** Current limit **7 =** Maximum frequency **8 =** Actual PID frequency limited **9 =** Actual PID frequency monitored **10 =** Torque **11 =** Torque precontrol **12 =** Control terminals *PosiCon* (with *PosiCon* option only) **13 =** Multiplication **14 =** Process controller actual value **15 =** Setpoint process controller **16 =** Process controller precontrol **17 =** Bus IO In Bits 0-7 **18 =** Curve travel calculator **19 =** Set relay (P541) **20 =** Set analog output (P542)	
P548 (P)	**Function bus setpoint 3**	**always visible**
0 ... 20 [0]	This parameter is identical to P547. It is only present when P546 ≠ 3.	
P549	**Pot Box Function**	**always visible**
0 ... 13 [1]	In this parameter, a function is assigned to the potentiometer value output when control is via the potentiometer option. (An explanation can be found in the description of P400) **0 =** Off **1 =** Setpoint frequency **2 =** Torque current limit **3 =** Actual frequency PID **4 =** Frequency addition **5 =** Frequency subtraction **6 =** Current limit **7 =** Maximum frequency **8 =** PID limited current frequency **9 =** PID supervised current frequency **10 =** Servo-ModeTorque **11 =** Pre-tension torque **12 =** No function **13 =** Multiplication	

Parameter	Setting value / Description / Note	Available with option
P550	**ControlBox Orders**	**always visible**
0 ... 3 [0]	It is possible to save a dataset (parameter set 1 to 4) of the connected FI in the optional **ControlBox** . It is saved inside the Box in a non-volatile memory and can therefore be transferred to other NORDAC *700E* devices with the same databank version (comp. P743). **0 = No function** **1 =** FI → ControlBox, dataset is written from the connected FI to the ControlBox. **2 =** ControlBox → FI, dataset is written from the ControlBox to the connected FI. **3 = Exchange**, the FI dataset is exchanged with the ControlBox dataset. With this variant, no data is lost. It is continuously exchangeable. **Note:** If parameterisation from old FI's must be loaded into new FI's, then the ControlBox must previously be written to by the new FI (=1). The dataset to be copied from the old FI can then be read out and copied to the new FI.	
P551	**Drive profile**	**always visible**
0 … 1 [0]	According to the option the relevant process data profiles can be activated with this parameter. This parameter is only effective for pluggable technology modules (SK TU1-…)	

System	CANopen*	DeviceNet	InterBus
Technology module	SK TU1-CAO	SK TU1-DEV	SK TU1-IBS
Setting			
0 =	USS protocol (Profile "Nord")		
1 =	DS402 profile	AC Drives profile	Drivecom profile

Note: With the use of the internal CANbus (CANnord) via the integrated customer interface (SK CU1-…), the settings in this parameter have no effect. The DS402 profile cannot be activated.

P554	**Chopper minimum**	**always visible**
65 ... 100 % [65]	The switching threshold of the brake chopper can be influenced with this parameter. An optimised value for numerous applications is set in the factory setting. This parameter can be increased for applications where pulsating energy is returned (crank drives) to minimise brake resistance power dissipation. An increase in this setting leads to a faster overvoltage FI switch off.	
P555	**P-limit chopper**	**always visible**
5 ... 100 % [100]	With this parameter it is possible to program a manual (peak) power limit for the brake resistor. The switch-on delay (modulation level) for the chopper can only rise to a certain maximum specified limit. Once this value has been reached, irrespective of the level of the link voltage, the inverter switches the resistance currentless. The result would be an overvoltage switch-off of the FI.	
P556	**Braking resistor**	**always visible**
3 ... 400 Ω [120]	Value of the brake resistance for the calculation of the maximum brake power to protect the resistor. Once the maximum continuous output (P557) has been reached, then an error I2t Limit (E003) is initiated.	
P557	**Brake resistor type**	**always visible**
0.00 ... 100.00 kW [0.00]	Continuous resistor output (nominal power) for the calculation of the maximum braking power. **0.00** = Monitoring deactivated	
P558 (P)	**Flux delay**	**always visible**
0 / 1 / 2 ... 500 ms [1]	The ISD control can only function correctly if there is a magnetic field in the motor. For this reason, a DC current is applied before starting the motor. The duration depends on the size of the motor and is automatically set in the factory setting of the FI. For time critical applications, the magnetizing time can be set or deactivated. **0 = Switched off** **1 = automatic calculation** **2...500 = corresponding set value** **Note:** Values that are too low can reduce the dynamics and torque development during start-up.	

Parameter	Setting value / Description / Note	Available with option
P559 (P)	**DC run-on time**	**always visible**
0.00 ... 5.0 s [0.50]	Following a stop signal and the braking ramp, a direct current is briefly applied to the motor to fully bring the drive to a stop. Depending on the inertia, the time for which the current is applied can be set in this parameter. The current level depends on the previous braking procedure (current vector control) or the static boost (linear characteristic).	
P560	**Save on EEPROM**	**always visible**
0 ... 1 [1]	**0 =** Changes to the parameter settings will be lost if the FI is disconnected from the mains supply. **1 =** All parameter changes are automatically written to the EEPROM and remain stored there even if the FI is disconnected from the mains supply. **Note:** If USS communication is used to implement parameter changes, it must be ensured that the maximum number of write cycles (100.000 x) is not exceeded.	

5.1.7 Positioning

For the description of parameter **P6xx** please refer to the instructions **BU 0710**. (www.nord.com)

5.1.8 Information

Parameter	Setting value / Description / Note	Available with option
P700	**Current fault**	**always visible**
0.0 ... 20.9	Actual error present. Further details in Chapter 6 Error messages. ControlBox: Descriptions of the individual error numbers can be found in the point Error messages. ParameterBox: Errors are displayed in plain text, further information can be found in the point Error messages.	
P701 **.. - 01** **...** **.. - 05**	**Last fault 1...5**	**always visible**
0.0 ... 20.9	This parameter stores the last 5 errors. Further details in Chapter 6 Error messages. The ControlBox must be used to select the corresponding memory location 1-5 (Array), and confirmed using the ENTER key to read the stored error code.	
P702 **.. - 01** **...** **.. - 05**	**Frequency last error 1...5**	**always visible**
-400.0 ... 400.0 Hz	This parameter stores the output frequency that was being delivered at the time the fault occurred. The values of the last 5 errors are stored. The ControlBox must be used to select the corresponding memory location 1-5 (Array), and confirmed using the ENTER key to read the stored error code.	
P703 **.. - 01** **...** **.. - 05**	**Current last error 1...5**	**always visible**
0.0 ... 500.0 A	This parameter stores the output current that was being delivered at the time the fault occurred. The values of the last 5 errors are stored. The ControlBox must be used to select the corresponding memory location 1-5 (Array), and confirmed using the ENTER key to read the stored error code.	
P704 **.. - 01** **...** **.. - 05**	**Voltage last error 1...5**	**always visible**
0 ... 500 V	This parameter stores the output voltage that was being delivered at the time the fault occurred. The values of the last 5 errors are stored. The ControlBox must be used to select the corresponding memory location 1-5 (Array), and confirmed using the ENTER key to read the stored error code.	
P705 **.. - 01** **...** **.. - 05**	**DC-link voltage last error 1...5**	**always visible**
0 ... 1000 V	This parameter stores the link voltage that was being delivered at the time the error occurred. The values of the last 5 errors are stored. The ControlBox must be used to select the corresponding memory location 1-5 (Array), and confirmed using the ENTER key to read the stored error code.	

Parameter	Setting value / Description / Note	Available with option
P706 .. - 01 ... .. - 05	**Parameter set last error 1...5**	**always visible**
0 ... 3	This parameter stores the parameter set code that was active when the error occurred. Data for the previous 5 faults are stored. The ControlBox must be used to select the corresponding memory location 1-5 (Array), and confirmed using the ENTER key to read the stored error code.	
P707 .. - 01 .. - 02	**Software version**	**always visible**
0 ... 9999	Contains the software status of the frequency inverter and cannot be changed.	**... - 01 =** Version number (3.0) **... - 02 =** Revision number (0)
P708	**State of digital inputs**	**always visible**
00 ... 3F (hexadecimal)	Displays the status of the digital inputs in hexadecimal code. This display can be used to check the input signals. Bit 0 = Digital input 1 Bit 1 **=** Digital input 2 Bit 2 **=** Digital input 3 Bit 3 **=** Digital input 4 Bit 4 **=** Digital input 5 Bit 5 **=** Digital input 6 Bit 6 = Digital input 7 (only with PosiCon) Bit 7 = Digital input 8 (only with PosiCon) Bit 8 = Digital input 9 (only with PosiCon) Bit 9 = Digital input 10 (only with PosiCon) Bit 10 = Digital input 11 (only with PosiCon) Bit 11 = Digital input 12 (only with PosiCon) Bit 12 = Digital input 13 (only with encoder) **ControlBox:** If just four digital inputs are present, then the status is displayed in binary. If the Customer Unit Multi I/O, Encoder or *PosiCon* is installed (Bit 4, 5 ...), the display is coded in hexadecimal.	

P709	Voltage analog input 1	BSC	STD	MLT			
-10.0 ... 10.0 V	Displays the measured analog input value 1. (-10,0 ... 10.0V)						
P710	**Voltage analog output 1**		STD	MLT			
0.0 ... 10.0V	Displays the delivered value of analog output 1. (0,0 ... 10.0V)						

P711	State of relays	always visible
00 ... 11 (binary)	Displays the actual status of the signal relays. Bit 0 = Relay 1 Bit 1 = Relay 2 Bit 2 = Relay 3 (Option PosiCon) Bit 3 = Relay 4 (Option PosiCon)	

P712	Voltage analog input 2			MLT			
-10.0 ... 10.0 V	Displays the measured analog input value 2. (-10,0 ... 10.0V)						
P713	**Voltage analog output 2**			MLT			
0.0 ... 10.0V	Displays the delivered value of analog output 2. (0,0 ... 10.0V)						

P714	Opetaring time	always visible
0.0 ... 9999.1 h	Time that the FI has voltage applied and is operational.	
P715	**Running time**	**always visible**
0.0 ... 9999.1 h	Time during which the FI was enabled.	
P716	**Current frequency**	**always visible**
-400 ... 400.0 Hz	Displays the actual output frequency.	

Parameter	Setting value / Description / Note	Available with option
P717	**Current speed**	**immer sichtbar**
-9999 ... 9999 rpm	Displays the actual motor speed calculated by the FI. Positive values are given for rotation in either direction.	
P718 **... - 01** **... - 02** **... - 03**	**Current set frequency**	**always visible**
-400 ... 400.0 Hz	Displays the frequency specified by the setpoint. (see also 8.1 Setpoint processing) **... - 01 =** Actual setpoint frequency from the setpoint source **...** - **02** = Actual setpoint frequency following processing in the inverter status machine **... - 03 =** Actual setpoint frequency after the frequency ramp	
P719	**Actual current**	**always visible**
0 ... 500.0 A	Displays the actual output current.	
P720	**Actual torque current**	**always visible**
-500.0 ... 500.0 A	Displays the actual calculated torque-developing output current. -500,0 ... 500.0 A → Negative values = generator, positive values = motor.	
P721	**Actual field current**	**always visible**
-500.0 ... 500.0 A	Displays the actual calculated field current.	
P722	**Current voltage**	**always visible**
0 ... 500 V	Displays the actual voltage supplied by the inverter output.	
P723	**Voltage -d**	**always visible**
0 ... 500 V	Displays the actual field voltage component.	
P724	**Voltage -q**	**always visible**
-500 ... 500 V	Displays the actual torque voltage component.	
P725	**Current cosφ**	**always visible**
0 ... 1.00	Displays the actual calculated power factor of the drive.	
P726	**Apparent power**	**always visible**
0.00 ... 300.00 kVA	Displays the actual calculated apparent power.	
P727	**Effective power**	**always visible**
0.00 ... 300.00 kW	Displays the actual calculated effective power.	
P728	**Input voltage**	**always visible**
0 ... 1000 V	Displays the actual mains voltage at the FI input.	
P729	**Torque**	**always visible**
-400 ... 400 %	Displays the actual calculated torque.	
P730	**Field**	**always visible**
0 ... 100 %	Displays the actual field in the motor as calculated by the inverter.	
P731	**Actual parameter set**	**always visible**
0 ... 3	Displays the actual parameter set.	
P732	**Phase U current**	**always visible**
0.0 ... 500.0 A	Displays the actual U phase current. **Note:** This value can, due to the measurement procedure used even with symmetrical output currents, deviate somewhat from the value in P719.	

Parameter	Setting value / Description / Note	Available with option
P733	**Phase V current**	**always visible**
0.0 ... 500.0 A	Displays the actual V phase current. **Note:** This value can, due to the measurement procedure used even with symmetrical output currents, deviate somewhat from the value in P719.	
P734	**Phase W current**	**always visible**
0.0 ... 500.0 A	Displays the actual W phase current. **Note:** This value can, due to the measurement procedure used even with symmetrical output currents, deviate somewhat from the value in P719.	
P735	**Speed encoder**	ENC POS
-9999 ... +9999 rpm	Displays the actual speed supplied by the encoder.	
P736	**DC link voltage**	**always visible**
0 ... 1000 V	Displays the actual link voltage.	
P740 **... - 01** **...** **... - 06**	**PZD Bus In**	**always visible**
0 ... FFFF hex	Displays the actual control word and the setpoints.	**... - 01** = Control Word **... - 02** = Setpoint 1 (P546) **... - 03** = Setpoint 1 Highbyte **... - 04** = Setpoint 2 (P547) **... - 05** = Setpoint 3 (P548) **... - 06** = Bus I/O In Bits (P480)
P741 **... - 01** **...** **... - 06**	**PZD Bus Out**	**always visible**
0 ... FFFF hex	Displays the actual status word and actual values.	**... - 01** = Status Word **... - 02 =** Actual value 1 (P543) **... - 03** = Actual value 1 Highbyte **... - 04** = Actual value 2 (P544) **... - 05** = Actual value 3 (P545) **... - 06** = Bus I/O In Bits (P481)
P742	**Database version**	**always visible**
0 ... 9999	Displays the internal database version of the frequency inverter.	
P743	**Inverter ID**	**always visible**
0.00 ... 250.00	Displays the inverter power in kW, e.g. "**15**" ⇒ FI with 15 kW nominal power.	
P744	**Configuration**	**always visible**
0 ... 9999	The option modules recognised by the frequency inverter are displayed in this parameter. The display with the ParameterBox is in plain text. The possible combinations are displayed in code in the ControlBox. The Customer Units in use are displayed on the right. If another Encoder module is installed, this is indicated in the second digit with a 1, the option *PosiCon* is indicated with a 2.	

Customer Unit **SK CU1-…**		Special Extension Unit **SK XU1-...**	
No IO	**XX00**	Encoder	**01XX**
Basic IO	**XX01**	*PosiCon*	**02XX**
Standard IO	**XX02**		
Multi IO	**XX03**		
USS IO	**XX04**		
CAN IO	**XX05**		
Profibus IO	**XX06**		

Parameter	Setting value / Description / Note	Available with option
P745 ... - 01 ... - 02 ... - 03	**Option version**	**always visible**
0 ... 32767	Software version of the integrated modules (only when own processor is present). Array level:	[01] Technology unit [02] Customer unit [03] Special extension unit
P746 ... - 01 ... - 02 ... - 03	**Option status**	**always visible**
0000 ... FFFF hex	Status of installed modules (when active) Array level:	[01] Technology unit [02] Customer unit [03] Special extension unit
P747	**Inverter voltage range**	**always visible**
0 ... 2	Indicates the mains voltage range for which this device is specified. **0 =** 100..0.120V **1 =** 200..0.240V **2 =** 380..0.480V	
P750	**Statistic overcurrent**	**always visible**
0 ... 9999	Number of overcurrent messages during the operating period.	
P751	**Statistic overvoltage**	**always visible**
0 ... 9999	Number of overvoltage messages during the operating period.	
P752	**Statistic mains failure**	**always visible**
0 ... 9999	Number of mains faults during the operating period.	
P753	**Statistic overtemperature**	**always visible**
0 ... 9999	Number of overtemperature faults during the operating period.	
P754	**Statistic parameter lost**	**always visible**
0 ... 9999	Number of parameters lost during the operating period.	
P755	**Statistic system error**	**always visible**
0 ... 9999	Number of system errors during the operating period.	
P756	**Statistic timeout**	**always visible**
0 ... 9999	Number of Time out errors during the operating period.	
P757	**Statistic customer error**	**always visible**
0 ... 9999	Number of Customer Watchdog errors during the operating period.	
P758	**Statistics PosiCon Fault 1**	**always visible**
0 ... 9999	Number of *PosiCon* errors during the operating period. See error E014	
P759	**Statistics PosiCon Fault 2**	**always visible**
0 ... 9999	Number of *PosiCon* errors during the operating period. See error E015	

5.2 Parameter overview, User settings

(P) ⇒ Parameter set-dependent, these parameters can be differently adjusted in 4 parameter sets.

Parameter No.		Name	Factory setting	Setting after commissioning			
				P 1	P 2	P 3	P 4
OPERATING DISPLAYS (5.1.1)							
P000		Operating display					
P001		Select of displayed value	0				
P002		Display factor	1.00				
BASIC PARAMETERS (5.1.2)							
P100		Parameter set	0				
P101		Copy parameter set	0				
P102	(P)	Acceleration time [s]	2.0/ 3.0/ 5.0				
P103	(P)	Deceleration time [s]	2.0/ 3.0/ 5.0				
P104	(P)	Minimum frequency [Hz]	0.0				
P105	(P)	Maximum frequency [Hz]	50.0				
P106	(P)	Ramp smoothing [%]	0				
P107	(P)	Brake reaction time [s]	0.00				
P108	(P)	Disconnection mode	1				
P109	(P)	DC brake current [%]	100				
P110	(P)	Time DC-brake on	2.0				
P111	(P)	P factor torque limit [%]	100				
P112	(P)	Torque current limit [%]	401 (OFF)				
P113	(P)	Jog frequency [Hz]	0.0				
P114	(P)	Brake delay off [s]	0.00				
MOTOR DATA / CHARACTERISTIC CURVE PARAMETERS (5.1.3)							
P200	(P)	Motor list	0				
P201	(P)	Nominal frequency [Hz]	*50.0 **				
P202	(P)	Nominal speed [rpm]	*1385 **				
P203	(P)	Nominal current [A]	*3.60 **				
P204	(P)	Nominal voltage [V]	*400 **				
P205	(P)	Nominal power [W]	*1.50 **				
P206	(P)	Cos phi	*0.80 **				
P207	(P)	Star Delta connection	*0 **				
P208	(P)	Stator resistance [Ω]	*4.37**				
P209	(P)	No load current [A]	*2.1 **				
P210	(P)	Static boost [%]	100				
P211	(P)	Dynamic boost [%]	100				
P212	(P)	Slip compensation [%]	100				
P213	(P)	ISD control loop gain [%]	100				
P214	(P)	Torque precontrol [%]	0				
P215	(P)	Boost precontrol [%]	0				
P216	(P)	Time boost precontrol [s]	0.0				
P217	(P)	Oscillation damping [%]	10				
P218		Modulation depth [%]	100				

*) dependent on inverter power or P200

Parameter No.		Name	Factory setting	Setting after commissioning			
				P 1	P 2	P 3	P 4
CONTROL PARAMETERS (5.1.4) Encoder option							
P300	(P)	Servo Mode [On / Off]	0				
P301		Incremental encoder	6				
P310	(P)	Speed controller P [%]	100				
P311	(P)	Speed controller I [%/ms]	20				
P312	(P)	Torque current controller P [%]	200				
P313	(P)	Torque current controller I [%/ms]	125				
P314	(P)	Torque current controller limit [V]	400				
P315	(P)	Field current controller P [%]	200				
P316	(P)	Field current controller I [%/ms]	125				
P317	(P)	Field current controller limit [V]	400				
P318	(P)	P weakening [%]	150				
P319	(P)	I weakening [%/ms]	20				
P320	(P)	Weak border [%]	100				
P321	(P)	Speed control I brake off	0				
P325		Function encoder	0				
P326		Ratio encoder	1.00				
P327		Speed slip error	0				
P330		Digital input 13	0				
CONTROL TERMINALS (5.1.5)							
P400		Analog 1input function	1				
P401		Mode analog input 1	0				
P402		Adjustment 1: 0% [V]	0.0				
P403		Adjustment 1: 100% [V]	10.0				
P404		Filter analog input 1 [ms]	100				
P405		Analog 2 input function	0				
P406		Mode analog input 2	0				
P407		Adjustment 2: 0% [V]	0.0				
P408		Adjustment 2: 100% [V]	10.0				
P409		Filter analog input 2 [ms]	100				
P410	(P)	Min. freq. analog input 1/2 [Hz]	0.0				
P411	(P)	Max. freq. analog input 1/2 [Hz]	50.0				
P412	(P)	Nominal value process controller [V]	5.0				
P413	(P)	PID control P-component [%]	10.0				
P414	(P)	PID control I-component [%/ms]	1.0				
P415	(P)	PID control D-component [%ms]	1.0				
P416	(P)	Ramp time PI setpoint. [s.]	2.0				
P417	(P)	Offset analog output 1 [V]	0.0				
P418	(P)	Analog 1 output function	0				
P419	(P)	Normalisation analog output 1 [%]	100				
P420		Digital input 1	1				
P421		Digital input 2	2				
P422		Digital input 3	8				
P423		Digital input 4	4				
P424		Digital input 5	0				
P425		Digital input 6	0				

Parameter No.		Name	Factory setting	Setting after commissioning			
				P 1	P 2	P 3	P 4
P426	(P)	Quick stop time [s]	0.1				
P427		Quick stop on error	0				
P428	(P)	Automatic starting [Off / On]	0				
P429	(P)	Fixed frequency 1 [Hz]	0.0				
P430	(P)	Fixed frequency 2 [Hz]	0.0				
P431	(P)	Fixed frequency 3 [Hz]	0.0				
P432	(P)	Fixed frequency 4 [Hz]	0.0				
P433	(P)	Fixed frequency 5 [Hz]	0.0				
P434	(P)	Relay 1 function	1				
P435	(P)	Relay 1 scaling [%]	100				
P436	(P)	Relay 1 hysteresis [%]	10				
P441	(P)	Relay 2 function	7				
P442	(P)	Relay 2 scaling [%]	100				
P443	(P)	Relay 2 hysteresis [%]	10				
P447	(P)	Offset analog output 2	0.0				
P448	(P)	analog 2 output function	0				
P449	(P)	Normalisation analog output 2 [%]	100				
P458		Mode analog output	0				
P460		Watchdog time [s]	10.0				
P480		Function Bus IO In Bits 0-7	0				
P481		Function Bus IO Out Bits 0-7	0				
P482		Normalisat. Bus IO Out Bits 0-7 [%]	100				
P483		Hysteresis Bus IO Out Bits 0-7 [%]	10				
EXTRA FUNCTIONS (5.1.6)							
P503		Leading function output	0				
P504		Pulse frequency [kHz]	4.0 / 6.0				
P505	(P)	Abs. minimum frequency [Hz]	2.0				
P506		Automatic acknowledgement	0				
P507		PPO type	1				
P508		Profibus address	1				
P509		Interface	0				
P510		Interface Bus setpoint	0				
P511		USS baud rate	3				
P512		USS address	0				
P513		Telegram time-out [s]	0.0				
P514		CAN baud rate	4				
P515		CAN address	50				
P516	(P)	Skip frequency 1 [Hz]	0.0				
P517	(P)	Skip frequency area 1 [Hz]	2.0				
P518	(P)	Skip frequency 2 [Hz]	0.0				
P519	(P)	Skip frequency area 2 [Hz]	2.0				
P520	(P)	Flying start	0				
P521	(P)	Flying st. resolution [Hz]	0.05				
P522	(P)	Flying st. offset [Hz]	0.0				
P523		Factory setting	0				
P533		Factor I2t-Motor	100				
P535		I^2t motor	0				

Parameter No.		Name	Factory setting	Setting after commissioning			
				P 1	P 2	P 3	P 4
P536		Current limit	1.5				
P537		Pulse disconnection	1				
P538		Check input voltage	3				
P539	(P)	Output monitoring	0				
P540	(P)	Mode phase sequence	0				
P541		Set relays	000000				
P542		Set analog output 1 ... 2	0				
P543	(P)	Bus - actual value 1	1				
P544	(P)	Bus - actual value 2	0				
P545	(P)	Bus - actual value 3	0				
P546	(P)	Function bus setpoint 1	1				
P547	(P)	Function bus setpoint 2	0				
P548	(P)	Function bus setpoint 3	0				
P549		Pot Box function	1				
P550		ControlBox Orders	0				
P551		Drive profile	0				
P554		Chopper min	65				
P555		P-limit chopper [%]	100				
P556		Braking resistor [Ω]	120				
P557		Brake resistor type [kW]	0				
P558	(P)	Flux delay [ms]	1				
P559	(P)	DC run-on time [s]	0.50				
P560		EEPROM storage	1				

POSITIONING PARAMETERS (5.1.7) *PosiCon*- Option (*Details in BU 0710 DE*)							
P600	(P)	Position control [On / Off]	0				
P601		Actual position [rev]	-				
P602		Actual reference position [rev]	-				
P603		Current pos. diff. [rev]	-				
P604		Encoder type	0				
P605		Absolute encoder	15				
P606		Incremental encoder	6				
P607		Ratio 1..2	1				
P608		Reduction ratio 1..2	1				
P609		Offset Pos 1..2	0.000				
P610		Setpoint mode	0				
P611	(P)	P position control	5.0				
P612	(P)	Pos. window	0.0				
P613	(P)	Position 1 ... 63	0.000				
P614	(P)	Position inc. 1 ... 6	0.000				
P615	(P)	Maximum pos.	0.000				
P616	(P)	Minimum pos.	0.000				
P617		Act. pos. check	0				
P618		Digital input 7	1				
P619		Digital input 8	2				
P620		Digital input 9	3				
P621		Digital input 10	4				

Parameter No.		Name	Factory setting	Setting after commissioning			
				P 1	P 2	P 3	P 4
P622		Digital input 11	11				
P623		Digital input 12	12				
P624	(P)	Relay 3 function	2				
P625	(P)	Relay 3 hyst.	1.00				
P626	(P)	Rel. 3 position	0				
P627	(P)	Relay 4 function	0				
P628	(P)	Relay 4 hyst.	1.00				
P629	(P)	Rel. 4 position	0.000				
P630	(P)	Position slip error	0.00				
P631	(P)	Abs./inc slip error..	0.00				

Parameter No.		Name	Actual status and displayed values				
INFORMATION (5.1.8), read only							
P700	(P)	Current fault					
P701		Last fault 1...5					
P702		Freq. last error 1...5					
P703		Current, last error 1...5					
P704		Voltage last error 1...5					
P705		DC link last error 1...5					
P706		P-set last error 1...5					
P707		Software version					
P708		State of digital input (hex)					
P709		Voltage analog input 1 [V]					
P710		Analog output voltage [V]					
P711		State of relays [binary]					
P712		Voltage analog input 2 [V]					
P713		Voltage analog output 2 [V]					
P714		Operating time [h]					
P715		Running time[h]					
P716		Current frequency [Hz]					
P717		Current speed [rpm]					
P718		Current set frequency 1..3 [Hz]					
P719		Actual current [A]					
P720		Actual torque current [A]					
P721		Actual field current					
P722		Current voltage [V]					
P723		Voltage -d [V]					
P724		Voltage -q [V]					
P725		Current cos phi					
P726		Apparent power [kVA]					
P727		Effective power [kW]					
P728		Input voltage [V]					
P729		Torque [%]					
P730		Field [%]					
P731		Parameter set					

Parameter No.	Name	Actual status and displayed values		
INFORMATION (5.1.8), read only				
P732	Phase U current [A]			
P733	Phase V current [A]			
P734	Phase W current [A]			
P735	Speed encoder [rpm]			
P736	DC link voltage [V]			
P740	PZD bus in			
P741	PZD bus out			
P742	Database version			
P743	Inverter ID			
P744	Configuration			
P745	Option version 1...3			
P746	Option status 1...3			
P747	Inverter voltage range			
P750	Stat. overcurrent			
P751	Stat. overvoltage			
P752	Stat. mains failure			
P753	Stat. overtemperature			
P754	Stat. parameter lost			
P755	Stat. system error			
P756	Stat. timeout			
P757	Stat. customer error			
P758	Stat. pos. error 1			
P759	Stat. pos. error 2			

6 Error messages

Errors can cause the frequency inverter to switch off.

The following options are available to reset a malfunction (acknowledge):

1. By switching mains off and on again,
2. By an appropriately programmed digital input (P420 ... P425 = Function 12),
3. by removing the "enable" at the FI (if no digital input is programmed for acknowledgement),
4. By Bus acknowledgement or
5. by P506, the automatic error acknowledgement.

6.1 ControlBox displays (option)

The **ControlBox** (option) displays an error with its number and the prefix "E". In addition, the actual error is displayed in parameter P700. The last error messages are stored in parameter P701. Further information on inverter status when errors occur can be found in parameters P702 to P706.

If the cause of the error is no longer present, the error display in the ControlBox flashes and the error can be acknowledged with the Enter key.

6.2 ParameterBox displays (option)

The **ParameterBox** (option) displays an error in plain text. In addition, the actual error is displayed in parameter P700. The last error messages are stored in parameter P701. Further information on frequency inverter status when errors occur can be found in parameters P702 to P706.

If the cause of the error is no longer present, the error can be acknowledged with the Enter key.

Table of possible error messages

Display		Error	Cause ➢ **Remedy**
Group	Detail in P700 / P701		
E001	**1.0**	Inverter overtemperature	Error signal from output stage module (static) ➢ Reduce ambient temperature (<50°C or <40°C , see also Chap. 7 Technical data) ➢ Check control cabinet ventilation
E002	**2.0**	Motor overtemperature (PTC resistor) Only if a digital input is programmed (Function 13).	Motor temperature sensor triggered (2sec delay) ➢ Reduce motor load ➢ Increase motor speed ➢ Use motor external fan
	2.1	Motor overtemperature (I^2t) Only if I^2t - Motor (P535) is programmed.	I^2t - Motor has triggered ➢ Reduce motor load ➢ Increase motor speed

Display		Error	Cause ➢ Remedy
Group	Detail in P700 / P701		
E003	**3.0**	Inverter overcurrent	I^2t limit has triggered, e.g. > 1.5 x I_n for 60s (please also note P504) ➢ Continuous overload at inverter output
	3.1	Overcurrent chopper	I^2t limit for braking resistance has triggered (please note P555, P556, P557) ➢ Avoid overcurrent in braking resistance ➢ Switch on flying start P250 for fan drives
	3.2	Inverter overcurrent	Derating at f < 2 Hz
E004	**4.0**	Overcurrent module	Error signal from module (short duration) ➢ Short-circuit or earthing at inverter output ➢ Use external output choke (motor cable is too long)
	4.1	Overcurrent pulse switch-off	Pulse switch-off P537 has triggered ➢ FI is overloaded ➢ Check motor data
E005	**5.0**	Overvoltage DC link	Inverter link voltage is too high ➢ Reduce energy return by means of a braking resistance ➢ Extend braking time (P103) ➢ If necessary, set switch-off mode (P108) with delay (not for lifting equipment) ➢ Extend emergency stop time (P426)
	5.1	Overvoltage mains	Mains voltage is too high ➢ Please check (380V-20% to 480V+10%)
E006	**6.0**	DC link circuit undervoltage (charging error))	Inverter mains / link voltage too low ➢ Check mains voltage (380V-20% to 480V+10%)
	6.1	Mains undervoltage	
E007	**7.0**	Mains phase failure	One of the three mains input phases was or is interrupted. ➢ Check mains phases (380V -20% to 480V +10%), possibly too low? ➢ All three mains phases must be symmetrical.
OFF		**Note:** OFF appears in the display when the three mains phases are uniformly reduced, i.e. when a normal mains switch off occurs during operation.	
E008	**8.0**	EEPROM parameter loss	Error in EEPROM data, EMC interference (see also E020) Software version of the stored data set not compatible with the software version of the FI. **Note:** Faulty parameters are automatically reloaded (default data).
	8.1	Invalid inverter type	➢ EEPROM faulty
	8.2	External EEPROM copy error (ControlBox)	➢ Check ControlBox for correct position. ➢ ControlBox EEPROM faulty (P550 = 1).

Display		Error	Cause ➢ Remedy
Group	Detail in P700 / P701		
	8.3	Customer unit type incorrect	➢
	8.4	Database number incorrect	➢
	8.7	Original and reflection are not identical	➢
	8.9	ControlBox error	SK-TU1-CTR memory is too small. ➢ Replace ControlBox
E009	**---**	ControlBox error	SPI Bus faulty, no communication with ControlBox. ➢ Check ControlBox for correct position. ➢ Switch mains voltage off and on again.
E010	**10.0**	Telegram downtime (P513)	➢ Telegram transfer is faulty, check external connection. ➢ Check Bus Protocol program process. ➢ Check Bus master.
	10.2	External bus module telegram time-out	
	10.4	External bus module initialisation failure	➢ Check P746. ➢ Bus module not correctly plugged in. ➢ Check Bus module current supply.
	10.1	External Bus module system failure	Further details can be found in the respective additional BUS operating instructions.
	10.3		
	10.5		
	10.6		
	10.7		
	10.8	External module communication error	Connection error/external module error, evaluation delayed by 1 sec, only when mains voltage present.
E011	**11.0**	Customer unit (SK CU1-...)	Reference voltage of customer unit faulty (10V/15V). Only displayed if control is via the control terminals (P509 = 0/1). ➢ Check control terminals connection for short-circuit. ➢ I/O module may not be correctly engaged
E012	**12.0**	Customer Watchdog	The Watchdog function is selected at a digital input and the impulse at the corresponding digital input is not present for longer than the time set in parameter P460 >Watchdog time<.
E013	**13.0**	Encoder error	Encoder error (only for special extension unit Encoder/PosiCon) ➢ 5V Sense signal not present at encoder input
	13.1	Speed slip error	➢ Slip error reached (P327), increase value.

Display		Error	Cause ➢ **Remedy**
Group	Detail in P700 / P701		
	13.2	Slip error switch-off monitoring	"Safe stop" was carried out ➢ Torque limit (P112) was reached, switch-off or increase as necessary. ➢ Current limit (P536) was reached, switch-off or increase as necessary. ➢ Check motor data (motor circuit, stator resistance) ➢ If necessary, check incremental encoder data (P3xx)
E014	**14.0**	Slave check	*PosiCon* - Error 1 Further details can be found in the description **BU 0710**
	14.1	Host check	
	14.2	Reference point travel error	
	14.3	Absolute encoder voltage monitoring bit	
	14.4	Absolute encoder error	
	14.5	Position change and speed do not match	
	14.6	Slip error between absolute and incremental encoders	
	14.7	Maximum position exceeded	
	14.8	Minimum position undershot	
E015	**15.0**	Incorrect software version	*PosiCon* - Error 2 Further details can be found in the description **BU 0710**
	15.1	Watchdog PosiCon	
	15.2	Stack overflow PosiCon	
	15.3	Stack underflow PosiCon	
	15.4	Undefined opcode PosiCon	
	15.5	Protected instruction PosiCon	
	15.6	Illegal word access PosiCon	
	15.7	Illegal instruction access PosiCon	
	15.8	EPROM error PosiCon	
E016	**16.0**	Motor phase error	➢ A motor phase is not connected. ➢ Check P539
	16.1	Motor current monitoring for braking mode	Required exciting current not achieved at moment of switch-on. ➢ Check P539 ➢ Check motor connection
E017	**17.0**	Customer unit change	New or missing customer unit ➢ Switch mains voltage *off* and then *on* again

Display		Error	Cause ➢ **Remedy**
Group	Detail in P700 / P701		
E020	**20.0**	External RAM error	System error in program execution, triggered by EMC interference. ➢ Please comply with wiring guidelines in Section 2.9. ➢ Use additional external mains filter. (Chap. 8.3 / 8.4 EMC) ➢ FI must be very well "earthed".
	20.1	Watchdog	
	20.2	Stack overflow	
	20.3	Stack underflow	
	20.4	Undefined opcode	
	20.5	Protected instruction	
	20.6	Illegal word access	
	20.7	Illegal instruction access	
	20.8	EPROM error	
	20.9	Error Dual-Port-Memory	
	21.0	NMI (not used by hardware)	
	21.1	PLL **e**rror	
	21.2	AD overrun	
	21.3	PMI access error	

7 Technical data

7.1 General Data

Function	Specification		
Output frequency	0.0 ... 400.0 Hz		
Pulse frequency	**1.5 to 7.5kW:** 3.0 ... 20.0kHz (Standard = 6kHz = Nominal power 100% ED) **11 - 37kW:** 3.0 ... 16.0kHz (Standard = 6kHz = Nominal power 100% ED) **45 to 110kW:** 3.0 ... 8.0kHz (Standard = 4.0kHz = Nominal power 100% ED) **132kW/160kW:** 4.0kHz		
Typical overload capacity	**1.5...22kW:** 150% for 60s, 200% for 3.5s	**30...132kW:** 150% for 60s (Pulse switch-off P537)	**SK 700E-163-340-O-VT:** Max. 125% for 60s (> 5Hz) Max. 80...125% for 60s (0...5Hz)
Protective measures against	Overtemperature of the frequency inverter Over and under-voltage	Short-circuit, earth fault Overload, idle running	
Regulation and control	Sensorless current vector control (ISD) Field-orientated control	Linear U/f characteristic curve	
Setpoint input analog / PID input (option)	0 ... 10V, ± 10V, 0/4 ... 20mA		
Analog setpoint resolution	10 bit based on measurement range		
Analog output (optional)	0 ... 10V scalable		
Setpoint consistency	Analog < 1% Digital < 0.02% (option)		
Motor temperature monitoring	I^2t motor (UL/CUL certified), PTC / Bimetal switch (optional, not UL/CUL)		
Ramp times	0 ... 99.99 s		
Control outputs (optional)	1 or 2 relays 28V DC / 230V AC, 2A		
Interface (optional)	According to option: RS 485 RS 232	CANbus CANopen DeviceNet	Profibus DP InterBus AS interface
Inverter efficiency	approx. 95%		
Ambient temperature	0℃ ... +50°C (S3 - 75% ED, 15 min.), 0°C ... +40°C (S1 - 100% ED) **> 22kW:** only 0°C ... +40°C (S1 - 100% ED) With **UL/CUL** certification, generally 0°C ...+40°C applies		
Storage and transport temperature	-20°C ... +60/70°C, max. 85% humidity without condensation.		
Long-term storage	See Section 8.6.1		
Protection class	IP20		
Electrical isolation	Control terminals (digital and analog inputs)		
Max. mounting altitude above sea level	Up to 1000m: No power reduction 1000...4000m: 1%/ 100m power reduction (up to 2000m overvoltage cat. 3) 2000...4000m: Only overvoltage category 2 is maintained, external overvoltage protection at the mains input is necessary		
Wait time between two mains switch on cycles	60 sec for all devices in normal operating cycle		

7.2 Continuous thermal output

If the pulse frequency (P504) of the power end stage is increased, deviating from the standard settings, this will lead to a reduction in continuous output power. The corresponding trend can be seen in the following diagram. The power loss is approx. 5% of the inverter nominal power (kW).

Diagram is valid for 1.5...160kW devices

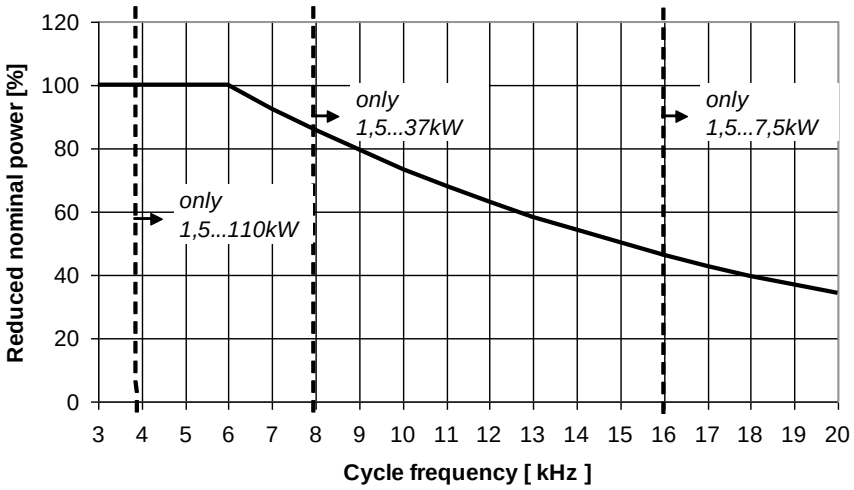

7.3 Electrical data

Size 1

Device type:	SK 700E	-151-340-A	-221-340-A	-301-340-A	-401-340-A
Nominal motor power	400V	1.5kW	2.2kW	3.0kW	4.0kW
(4-pole standard motor)	460...480V	2hp	3hp	4hp	5hp
Mains voltage		3 AC 380 - 480V, -20% / +10%, 47...63 Hz			
Output voltage		3 AC 0 - Mains voltage			
Nominal output current (rms)	[A]	3.6	5.2	6.9	9.0
Recommended braking resistance	(Accessories)	200 Ω		100 Ω	
Min. braking resistor		90 Ω			
Typ. input current (rms)	[A]	6	8	11	13
Rec. mains fuse	slow-blowing	10A	10A	16A	16A
Type of ventilation		Convection		Fan cooling (temperature-controlled)	
Weight	Approx. [kg]	4			

Size 2 / 3

Device type:	SK 700E ...	-551-340-A	-751-340-A	-112-340-A	-152-340-A
Nominal motor power	400V	5.5kW	7.5kW	11kW	15kW
(4-pole standard motor)	460...480V	7½hp	10hp	15hp	20hp
Mains voltage		3 AC 380 - 480V, -20% / +10%, 47...63 Hz			
Output voltage		3 AC 0 - Mains voltage			
Nominal output current (rms)	[A]	11.5	15.5	23	30
Recommended braking resistance	(Accessories)	60 Ω		30 Ω	
Min. braking resistor		40 Ω	32 Ω	28 Ω	
Typ. input current (rms)	[A]	17	21	30	40
Rec. mains fuse	slow-blowing	20A	25A	35A	50A
Type of ventilation		Fan cooling (temperature-controlled)			
Weight	Approx. [kg]	5		9	9.5

Size 4

Device type:	**SK 700E ...**	**-182-340-A**	**-222-340-A**
Nominal motor power	400V	18.5kW	22.0kW
(4-pole standard motor)	460...480V	25hp	30hp
Mains voltage		3 AC 380 - 480V, -20% / +10%, 47...63 Hz	
Output voltage		3 AC 0 - Mains voltage	
Nominal output current (rms)	[A]	35	45
Recommended braking resistance	(Accessories)	22 Ω	
Min. braking resistor		22 Ω	14 Ω
Typ. input current (rms)	[A]	50	60
Rec. mains fuse	slow-blowing	50A	63A
Type of ventilation		Fan cooling (temperature-controlled)	
Weight	Approx. [kg]	12	12.5

Size 5 / 6

Device type:	**SK 700E ....**	**-302-340-O**	**-372-340-O**	**-452-340-O**	**-552-340-O**
Nominal motor power	400V	30kW	37kW	45kW	55kW
(4-pole standard motor)	460...480V	40hp	50hp	60hp	75hp
Mains voltage		3 AC 380 - 480V, -20% / +10%, 47...63 Hz			
Output voltage		3 AC 0 - Mains voltage			
Nominal output current (rms)	[A]	57	68	81	103
Recommended braking resistance	(Acces-sories)	12 Ω		8 Ω	
Min. Brake resistor		9 Ω		6 Ω	
Typ. input current (rms)	[A]	70	88	105	125
Rec. mains fuse	slow-blowing	100A	100A	125A	160A
Type of ventilation		Fan cooling			
Weight	Approx. [kg]	24		28	

Size 7 / 8

Device type:	**SK 700E ....**	**-752-340-O**	**-902-340-O**	**-113-340-O**	**-133-340-O**	**-163-340-O-VT ***
Nominal motor power	400V	75kW	90kW	110kW	132kW	160kW
(4-pole standard motor)	460...480V	100hp	125hp	150hp	180hp	220hp
Mains voltage		3 AC 380 - 480V, -20 % / +10 %, 47...63 Hz				
Output voltage		3 AC 0 - Mains voltage				
Nominal output current (rms)	[A]	133	158	193	230	280
Recommended braking resistance	(Acces-sories)	6 Ω		3 Ω		
Min. braking resistance		5 Ω		3 Ω		
Typ. input current (rms)	[A]	172	200	240	280	340
Rec. mains fuse	slow-blowing	200A	250A	300A	300A	400A
Type of ventilation		Fan cooling				
Weight	Approx. [kg]	45	45	110	115	115
						*) For equipment with reduced overload, see Chapter 7.1

7.4 Electrical data for UL/cUL certification

The data given in this section must be taken into account to comply with UL/CUL certification-
Use of mains fuses which are faster than those stated is permissible.

Size 1

Device type:	SK 700E	-151-340-A	-221-340-A	-301-340-A	-401-340-A
Nominal motor power	380V	1½hp	2hp	3hp	4hp
(4-pole standard motor)	460...480V	2hp	3hp	4hp	5hp
FLA	[A]	3.4	4.8	5.1	7.6
Permissible mains fuse	J Class Fuse, 600V	10A	10A	15A	15A
Rec. mains fuse	Bussmann	LPJ-10SP	LPJ-10SP	LPJ-15SP	LPJ-15SP

Size 2 / 3

Device type:	SK 700E ...	-551-340-A	-751-340-A	-112-340-A	-152-340-A
Nominal motor power	380V	5hp	7½hp	10hp	15hp
(4-pole standard motor)	460...480V	7½hp	10hp	15hp	20hp
FLA	[A]	11	14	21	27
Permissible mains fuse	J Class Fuse, 600V	20A	25A	35A	50A
Rec. mains fuse	Bussmann	LPJ-20SP	LPJ-25SP	LPJ-35SP	LPJ-50SP

Size 4

Device type:	SK 700E ...	-182-340-A	-222-340-A
Nominal motor power	380V	20hp	25hp
(4-pole standard motor)	460...480V	25hp	30hp
FLA	[A]	35	40
Permissible mains fuse	J Class Fuse, 600V	50A	60A
Rec. mains fuse	Bussmann	LPJ-50SP	LPJ-60SP

Size 5 / 6

Device type:	SK 700E	-302-340-O	-372-340-O	-452-340-O	-552-340-O
Nominal motor power	380V	30hp	40hp	50hp	60hp
(4-pole standard motor)	460...480V	40hp	50hp	60hp	75hp
FLA	[A]	52	65	77	96
Permissible mains fuse	J Class Fuse, 600V	80A	100A	125A	150A
Rec. mains fuse	Bussmann	FRS-R-80	FRS-R-100	FRS-R-125	FRS-R-150

Size 7

Device type:	SK 700E	-752-340-O	-902-340-O
Nominal motor power	380V	75hp	100hp
(4-pole standard motor)	460...480V	100hp	125hp
FLA	[A]	124	156
Permissible mains fuse	J Class Fuse, 600V	200A	225A
Rec. mains fuse	Bussmann	FRS-R-200	FRS-R-225

8 Additional information

8.1 Setpoint processing in the SK 700E

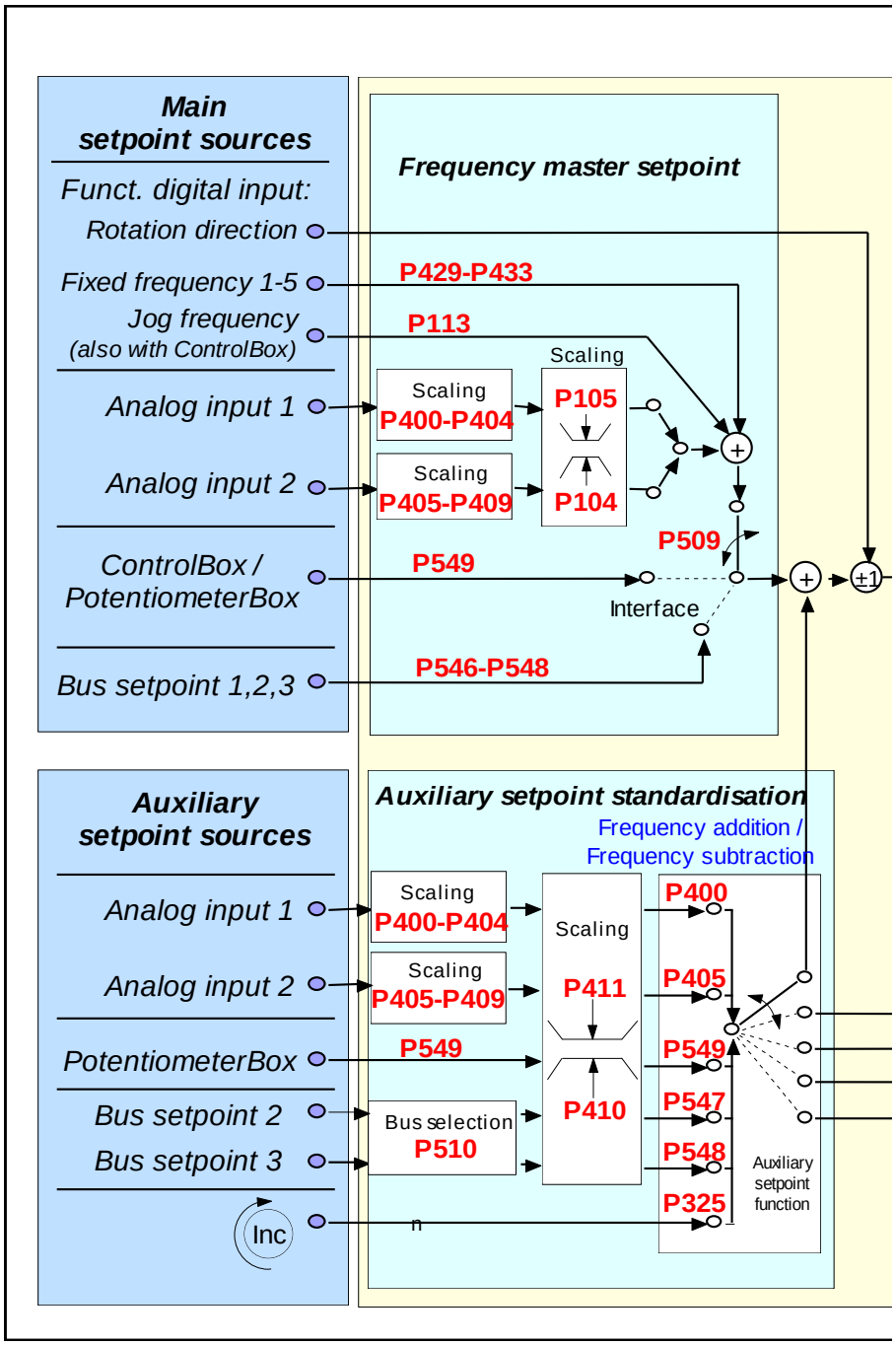

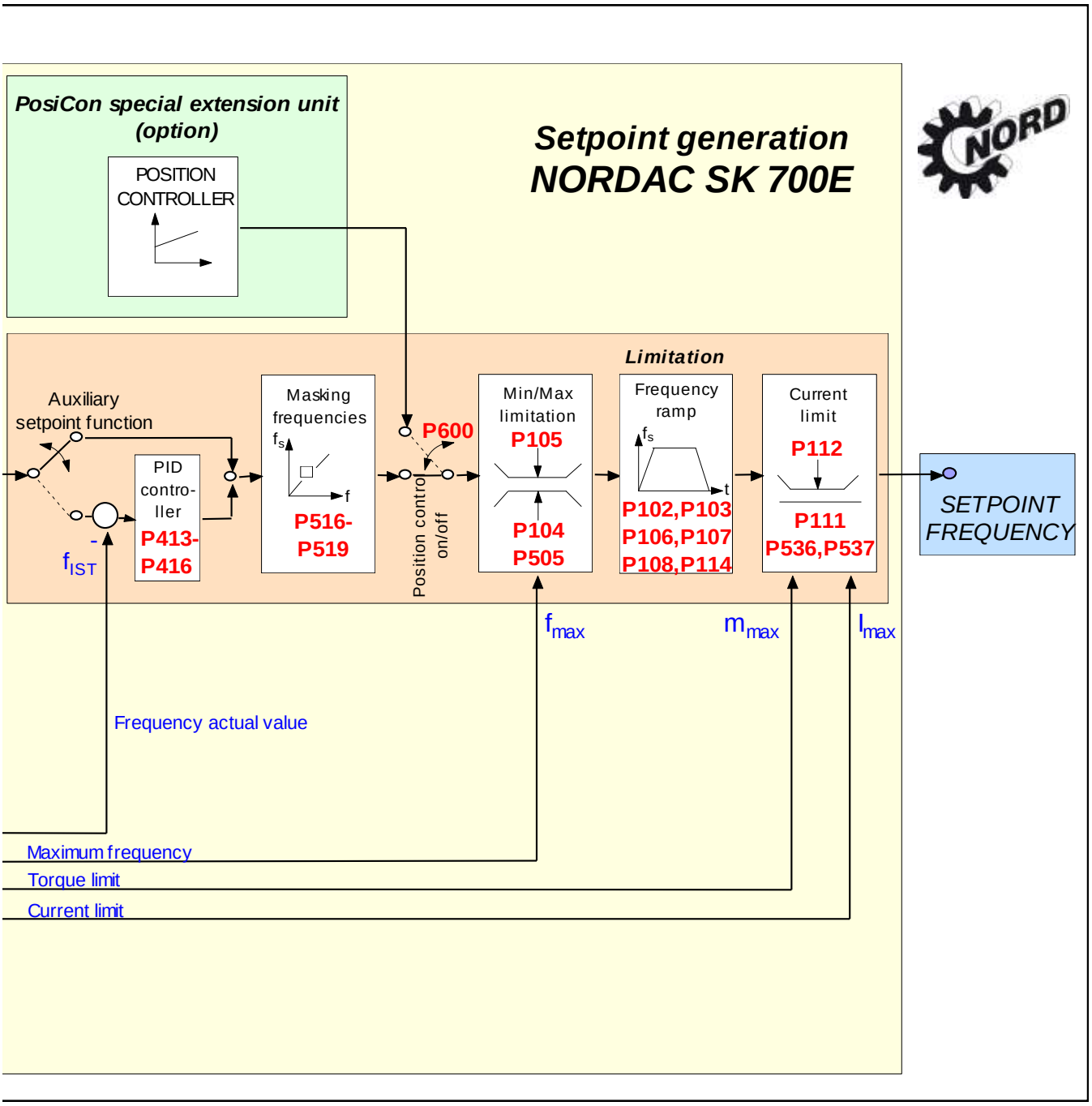
PosiCon special extension unit (option)
POSITION CONTROLLER
Setpoint generation
NORDAC SK 700E
Limitation
Auxiliary setpoint function
PID contro-ller
P413-P416
Masking frequencies
P516-P519
P600
Position control on/off
Min/Max limitation
P105
P104
P505
Frequency ramp
P102,P103
P106,P107
P108,P114
Current limit
P112
P111
P536,P537
SETPOINT FREQUENCY
fIST
fmax
mmax
Imax
Frequency actual value
Maximum frequency
Torque limit
Current limit

8.2 Process controller

The process controller is a PI controller which can be used to limit the controller output. In addition, the output is scaled as a percentage of a master setpoint. This provides the option of controlling any downstream drives with the master setpoint and readjusting using the PI controller.

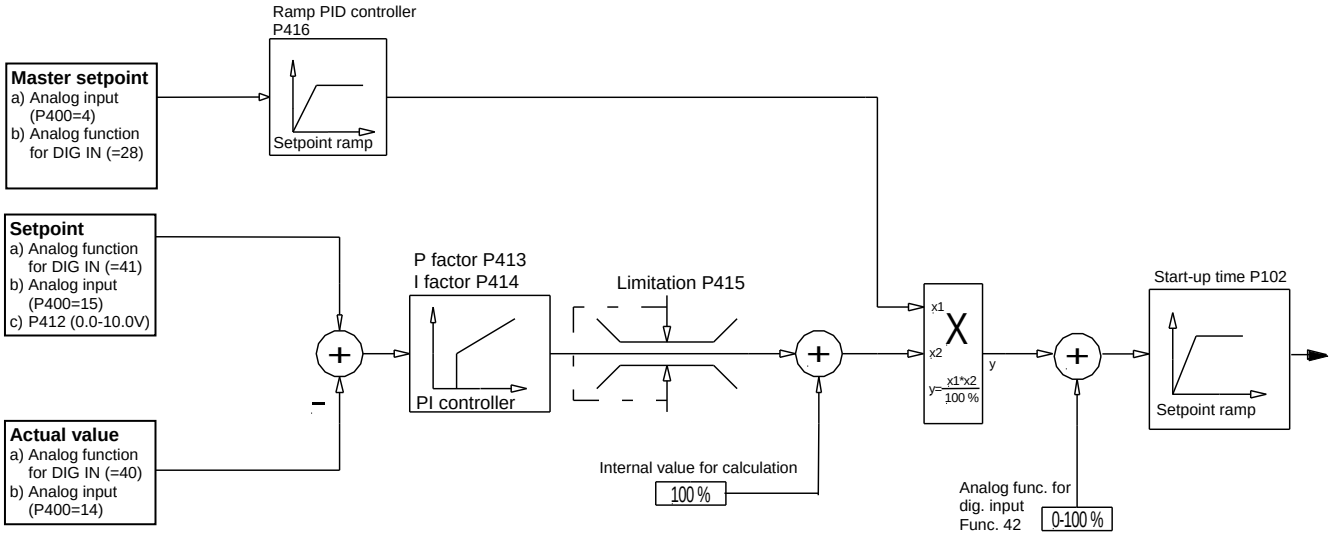

8.2.1 Process controller application example

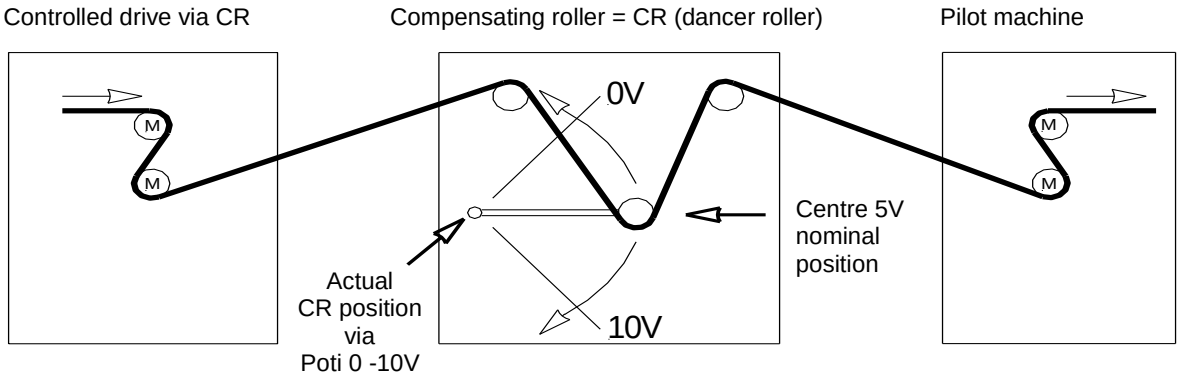

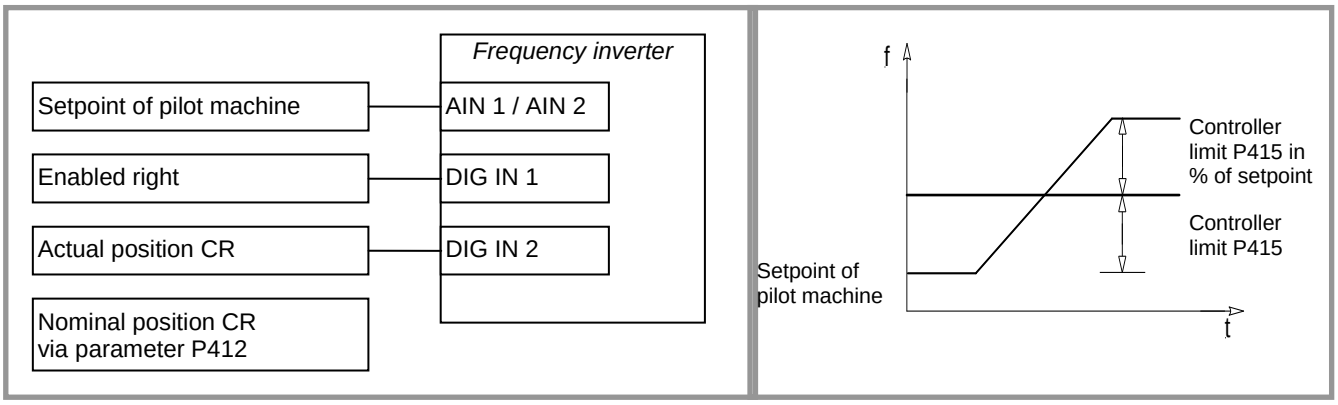

8.2.2 Process controller parameter settings

(Example: Setpoint frequency: 50Hz, control limits: +/- 25%)

P105 (maximum frequency) [Hz] : $\geq Setpoint\ freq.[Hz] + \left(\frac{Setpoint\ freq.[Hz] \times P415[\%]}{100\%} \right)$

: E.g. $\geq 50Hz + \frac{50Hz \times 25\%}{100\%} =$ **62.5 Hz**

P400 (Funct. analog input) : **"4"** (frequency addition)

P411 (setpoint frequency) [Hz] : Set frequency with 10 V at analog input 1
: E.g. **50 Hz**

P412 (Process controller setpoint) : CR middle position / Default setting 5 V (adapt if necessary)

P413 (P controller) [%] : Factory setting **10%** (adapt if necessary)

P414 (I-controller) [% / ms] : recommended $0.10\,{}^{\%}\!/_{ms}$

P415 (limitation +/-) [%] : Controller limitation (see above)

Note: In the function process controller, parameter P415 is used as a controller limiter downstream from the PI controller. This parameter therefore has a double function.

Example 25% of setpoint

P416 (ramp before controller) [s] : Factory setting 2s (if necessary, adjust to controller behaviour)

P420 (Funct. Switch digital input 1) : **"1"** Enable right

P421 (Funct. Switch digital input 2) : **"40"** actual value PID process controller (only with Basic I/O or Standard I/O)

Alternatively, the 2nd analog input (P405=14) of the multi I/O can be used.

8.3 Electromagnetic compatibility (EMC)

All electrical equipment that have an intrinsic, independent function and are placed on the market as individual units for users from January 1996 must comply with the EEC directive EEC/89/336EEC . There are three different ways for manufacturers to display compliance with this directive:

1. *EC declaration of conformity*

   This is a declaration from the manufacturer stating that the requirements in the applicable European standards for the electrical environment of the equipment have been met. Only those standards which are published in the Official Journal of the European Community can be cited in the manufacturer's declaration.

2. *Technical documentation*

   Technical documentation can be produced which describes the EMC characteristics of the device. This documentation must be authorised by one of the "Responsible bodies" named by the responsible European government. This makes it possible to use standards that are still under preparation.

3. *EC type test certificate* This method only applies to radio transmitter equipment.

SK 700E inverters only have an intrinsic function when they are connected to other equipment (e.g. a motor). The base units cannot therefore carry the CE mark that would confirm compliance with the EMC directive. Precise details are therefore given below about the EMC behaviour of this product, based on the proviso that it is installed according to the guidelines and instructions described in this documentation.

Class 1: General, for industrial environments

Complies with the EMC standard for power drives EN 61800-3, for use in **secondary environments (industrial)** and when **not generally available**.

Class 2: Interference suppressed for industrial environments (operation has own supply transformer)

In this operating class, the manufacturer can certify that his equipment meets the requirements of the EMC directive for industrial environments with respect to their EMC behaviour in power drives. The limit values correspond to the basic standards EN 50081-2 and EN 50082-2 for radiation and interference resistance in industrial environments.

Class 3: Interference suppressed for domestic, commercial and light industry environments

In this operating class, the manufacturer can certify that his equipment meets the requirements of the EMC directive for domestic, commercial and light industry environments with respect to their EMC behaviour in power drives. The limit values correspond to the basic standards EN 50081-1 and EN 50082-1 for radiation and interference resistance.

Note: NORDAC SK 700E Frequency inverters **are intended exclusively for commercial use**. They are therefore not subject to the requirements of the standard EN 61000-3-2 for radiation of harmonics.

8.4 EMC limit value classes

Device type	**without** aux. line filter	**with** aux. line filter	**with** aux. line filter	Mains filter type
SK 700E-151-340-A - SK 700E-222-340-A	Class 2 (A)	Class 2 (A)	Class 3 (B)	Allocation as per table in Chap. 2.3/2.4
Max. motor cable, shielded	15m	50m	30m	
SK 700E-302-340-O - SK 700E-163-340-O-VT	Class 1 (-)	Class 2 (A)	Class 3 (B)	Allocation as per table in Chap. 2.4
Max. motor cable, shielded	---	50m	25m	

NOTE:

Please note that these limit value classes are only reached if the standard switching frequency (**4/6kHz**) is being used and the length of the shielded motor cable does not exceed the limits.

In addition, it is essential to use wiring suitable for EMC. (Control cabinet / Cable clamping)

The motor cable shielding must be applied on both sides (inverter shield angle and the metal motor terminal box). To comply with Class 3, cable shielding must also be applied at the entry to the control cabinet (EMC screw connection).

Overview of standards that, as per EN 61800-3 (product standard for frequency inverters) are based on EN 50081; 510082 and must be complied with			
	Standard	***Limit value class***	
Emission of interference			
Cable based interferences	EN55011	"A"	"B" with filter
Radiated interference	EN55011	"A"	"B" with filter, built into control cabinet
Immunity from interference			
DSE	EN61000-4-2	8kV (AD & CD)	
Burst on control cables	EN61000-4-4	1kV	
Burst on mains and motor cables	EN61000-4-4	2kV	
Surge (phase-phase / phase-ground)	EN61000-4-5	1kV / 2kV	
EMF	EN61000-4-3	10V/m; 26-1000MHz	
Voltage fluctuations and drops	EN61000-2-1	+10%, -15%; 90%	
Voltage asymmetries and frequency changes	EN61000-2-4	3%; 2%	

Wiring recommendations for compliance with Class 3

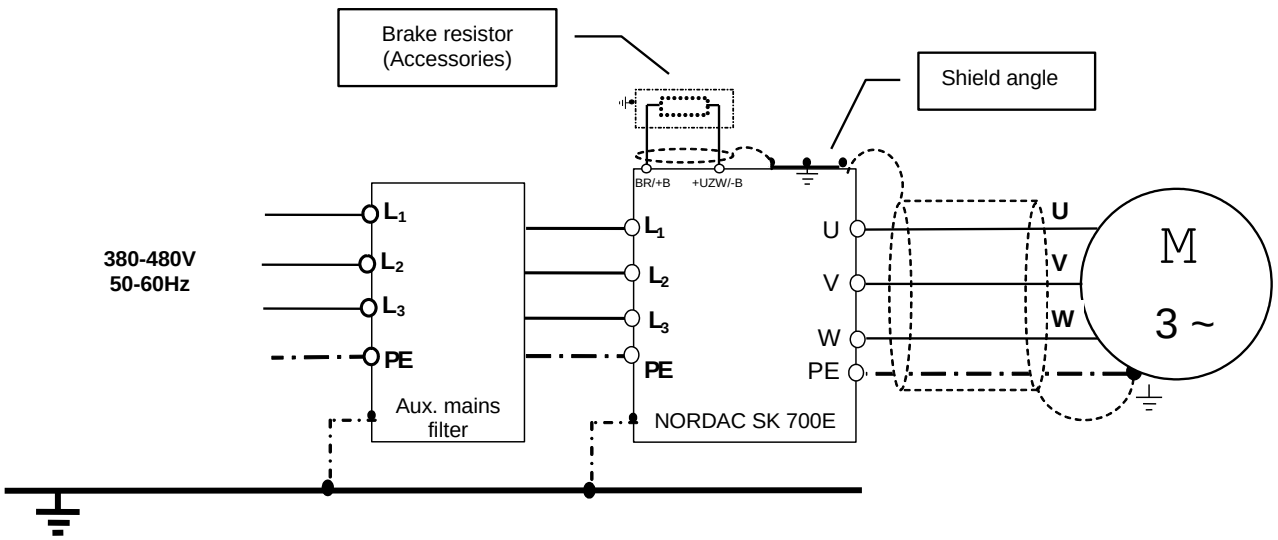

8.5 Standardisation of setpoint / target values

The following table contains details for the standardisation of typical setpoint and actual values. These details relate to parameters (P400), (P418), (P543), (P546), (P740) or (P741).

Designation	**Analog signal**		**Bus signal**						
Setpoint values {Function}	Value range	Standardisation	Value range	Max. value	Type	100% =	-100% =	Standardisation	Limitation absolute
Setpoint frequency {01}	0-10V (10V=100%)	P104 … P105 (min - max)	±100%	16384	INT	4000_{hex} 16384_{dec}	$C000_{hex}$ $.16385_{dec}$	4000_{hex} * $f_{setpoint}$[Hz]/P105	P105
Frequency addition {04}	0-10V (10V=100%)	P410 … P411 (min - max)	±200%	32767	INT	4000_{hex} 16384_{dec}	$C000_{hex}$ $.16385_{dec}$	4000_{hex} * $f_{setpoint}$[Hz]/P411	P105
Frequency subtraction {05}	0-10V (10V=100%)	P410 … P411 (min - max)	±200%	32767	INT	4000_{hex} 16384_{dec}	$C000_{hex}$ $.16385_{dec}$	4000_{hex} * $f_{setpoint}$[Hz]/P411	P105
Actual value Process controller {14}	0-10V (10V=100%)	P105* U_{AIN}(V)/10V	±100%	16384	INT	4000_{hex} 16384_{dec}	$C000_{hex}$ $.16385_{dec}$	4000_{hex} * $f_{setpoint}$[Hz]/P105	P105
Setpoint value Process controller {15}	0-10V (10V=100%)	P105* U_{AIN}(V)/10V	±100%	16384	INT	4000_{hex} 16384_{dec}	$C000_{hex}$ $.16385_{dec}$	4000_{hex} * $f_{setpoint}$[Hz]/P105	P105
Torque current limit {2}	0-10V (10V=100%)	P112* U_{AIN}(V)/10V	0…100%	16384	INT	4000_{hex} 16384_{dec}	/	4000_{hex} * I[A]/P112	P112
Current limit {6}	0-10V (10V=100%)	P536* U_{AIN}(V)/10V	0…100%	16384	INT	4000_{hex} 16384_{dec}	/	4000_{hex} * I[A]/P536	P536
Actual values {Function}									
Actual frequency {01}	0-10V (10V=100%)	P201* U_{AOut}(V)/10V	±100%	16384	INT	4000_{hex} 16384_{dec}	$C000_{hex}$ $.16385_{dec}$	4000_{hex} * f[Hz]/P201	
Actual speed {02}	0-10V (10V=100%)	P202* U_{AOut}(V)/10V	±200%	32767	INT	4000_{hex} 16384_{dec}	$C000_{hex}$ $.16385_{dec}$	4000_{hex} * n[rpm]/P202	
Current {03}	0-10V (10V=100%)	P203* U_{AOut}(V)/10V	±200%	32767	INT	4000_{hex} 16384_{dec}	$C000_{hex}$ $.16385_{dec}$	4000_{hex} * f[Hz]/P105	
Torque current {04}	0-10V (10V=100%)	P112* 100/ $\sqrt{((P203)^2-(P209)^2)}$* U_{AOut}(V)/10V	±200%	32767	INT	4000_{hex} 16384_{dec}	$C000_{hex}$ $.16385_{dec}$	4000_{hex} * I_q[A]/(P112)*100/ $\sqrt{((P203)^2-(P209)^2)}$	

8.6 Maintenance and servicing information

In normal use, NORDAC SK 700E frequency inverters are maintenance free. Please note the "general data" in Section 7.1.

8.6.1 Maintenance notes

Dusty environments

If the frequency converter is being used in a dusty environment, then the cooling-vane surfaces should be regularly cleaned with compressed air. If air intake filters have been built into the control cabinet, then these should also be regularly cleaned or replaced.

Long-term storage

The frequency inverter must be regularly connected to the supply network for at least 60 min.

If this is not carried out, there is a danger that the frequency inverter may be destroyed.

If a device is to be stored for longer than one year, it must be recomissioned with the aid of an adjustable transformer before normal connection to the mains.

Long-term storage for 1 - 3 years

30 min with 25% mains voltage

30 min with 50% mains voltage

30 min with 75% mains voltage

30 min with 100% mains voltage

Long-term storage for >3 years or if the storage period is not known:

120 min with 25% mains voltage

120 min with 50% mains voltage

120 min with 75% mains voltage

120 min with 100% mains voltage

The device must not be subject to load during the regeneration process.

After the regeneration process, the regulations described above apply again
(at least 60 min on the mains 1x per year).

8.6.2 Repair notes

If you contact our technical support, please have the precise device type (rating plate/display), accessories and/or options, the software version used (P707) and the series number (rating plate) at hand.

The device must be sent to the following address if it needs repairing:

NORD Electronic DRIVESYSTEMS GmbH
Tjüchkampstraße 37
26605 Aurich, Germany

For queries about repairs, please contact:

Getriebebau NORD GmbH & Co.
Phone: 04532 / 401-515
Fax: 04532 / 401-555

If a frequency inverter is sent in for repair, no liability can be accepted for any added components, e.g. such as mains cables, potentiometer, external displays, etc.!

Note: Please remove all non-original parts from the frequency inverter.

NOTE

If possible, the reason for returning the component/device should be stated. If necessary, at least one contact should be stated in case of queries.
This is important in order to keep repair times as short and efficient as possible.
On request you can also obtain a suitable return good voucher from Getriebebau NORD.
Unless otherwise agreed, the device is reset to the factory settings after inspection or repair.

8.7 Additional information

You can also find the comprehensive manual in German, English and French on our Internet site.

http://www.nord.com/

You can also obtain this manual from your local representative if necessary.

8.8 RS 232 PC interface on RJ12 socket

To parameterise a NORDAC SK 700E, a PC can be used in addition to the TU ControlBox or ParameterBox. The NORD CON software is required. It can be downloaded free of charge from the Internet (www.nord.com).

The matching PC connection cable "RJ12 on SUD-D9" has the Mat. No. 278910240 and is 3m long. It is connected to the serial PC interface. Only the RS 232 i8s applied to the connector.

RJ12 → SUB-D 9 (Mat. No. 278910240)

RS 232 for PC connection Length: approx. 3m

Pin assignment RJ 12 **RS 232 / RS 485**	**Function**	Pin assignment SUB-D 9 **RS 232**
1	A_485	-
2	B_485	-
3	GND_EX	5
4	TXD_232	3
5	RXT_232	2
6	+5V_EX	-

NOTE: When used as RS485 (for USS Bus), the termination resistor of the last subscriber must be switched on using the DIP switch next to the RJ12 socket.

8.8.1 SK 700E up to 22kW

This connection option can be optionally ordered for devices from 1.5 to 22kW. The type designation of the devices is then **SK 700E-xxx-340-A-RS2**.

The socket is located under the blank screw caps in the cover of the device, on the left next to the technology unit slot.

A 120 Ω termination resistor can be connected via the DIP switch located next to the RJ12 socket. The DIP switch must be set to the "ON" position if the frequency inverter communicates as the first or last participant via RS 485.

RJ12 “on board“ BG 1-4 (option)

8.8.2 SK 700E from 30kW

This connection is available in the standard designs for devices from 30 to 160kW.

The socket is located under the device cover, left next to the technology unit slot.

A 120 Ω termination resistor can be connected via the DIP switch located next to the RJ12 socket. The DIP switch must be set to the "ON" position if the frequency inverter communicates as the first or last participant via RS 485.

RJ12 ”on board“ BG 5-8 (standard)

9 Keyword index

P

Q

R

S

T

U

V

W

NORD Drivesystems | Global vor Ort

Headquarters:

Getriebebau NORD GmbH & Co. KG
Rudolf-Diesel-Straße 1
D - 22941 Bargteheide
Fon +49 (0) 4532 / 401 - 0
Fax +49 (0) 4532 / 401 - 253
info@nord.com
www.nord.com

NORD DRIVESYSTEMS

Mat. Nr. 607 7002 / 1411