COMUS Group

COMUS International

Tilt Switch - Non Mercury Contacts
Part Number : RBS 04 01 00
Product Data Sheet

PICTURE

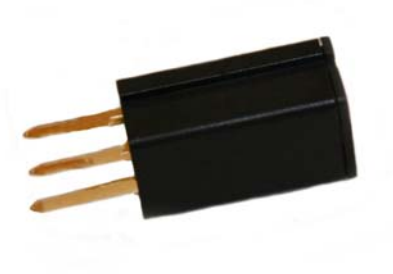

DIMENSIONS

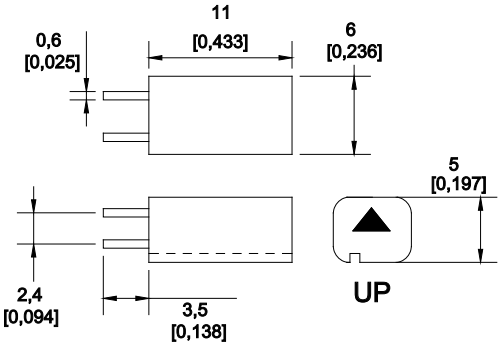

CONTACT FORM

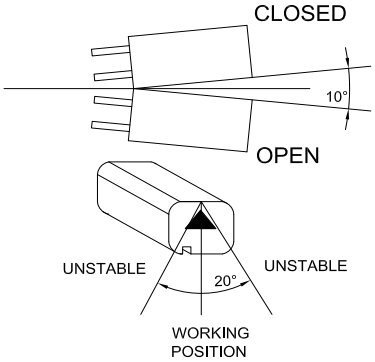

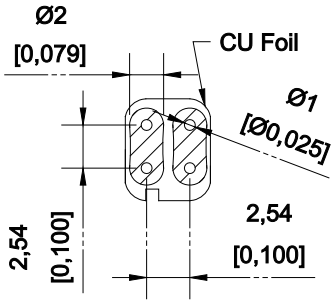

✔RoHS Compliant

Drawings not to scale
All dimensions in mm nominal

SPECIFICATION

Contact Form / Style		Dependant on position (see above)
Switching Voltage	Max Volts DC	24
Switching Current	Max mAmps	25
Contact Resistance	Max Ohms	initial 5 max, 10 after life test
Operation Life	Cycles	100,000
Operating Temperature	Celsius	-25° - 70°
Storage Temperature	Celsius	-40° - 85°
Case Material		Glass Fibre Polyamide, UL94V-0
Cable/Termination		Pin

Applications Include

- Security Alarm System.
- Electronic toys .
- Rotational monitoring
- Consumer electronics.

Features / Options

- Terminal, Copper Alloy or Gold plated over Nickel
- Suitable for Alarms and non hazardous applications.
- All switches have gold plated ball and gold plated terminals for stability

Did you know we also sell?

Rev. No.	Revision Note	Date	Signature
3	Pin detail added	20-06-12	ML

As part of the company policy of continued product improvement, specifications may change without notice. Our sales office will be pleased to help you with the latest information on this product range and the details of our full design and manufacturing service. All products are supplied to our standard conditions of sale unless otherwise agreed in writing.

Phone : (1)973 777 6900 www.comus-intl.com Fax: (1)973 777 8405

Belgium: +32 (0) 12 390400 - Assemtech,UK: +44 (0) 1255 862236 - Germany:+49 (0)911 923 15 943

© 2012 Copyright Comus International, 454 Allwood Road, Clifton NJ 07012, USA