Emotron M20
Shaft Power Monitor

Data sheet
English

emotron®
DEDICATED DRIVE

The M20 provides complete flexibility in terms of the type of protection required for your application. You may select either overload and underload protection or simply overload with pre-alarm or underload with pre-alarm. Independent response delays are selectable for both overload and underload protection. Additonal flexibility is provided in the form of programmable output relays, number of start attempts, number of reversing attempts etc.

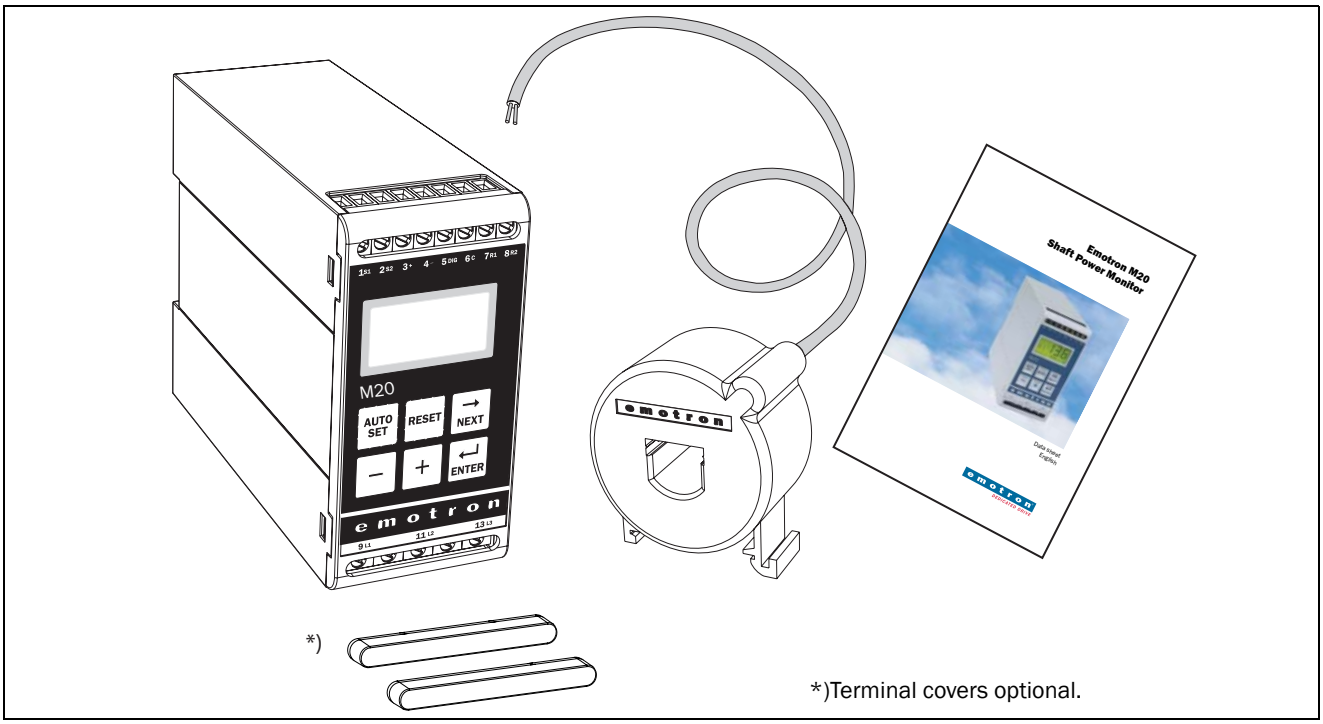

Fig. 1 Emotron M20 and current transformer (CT), both for mounting on standard DIN rail 35mm.

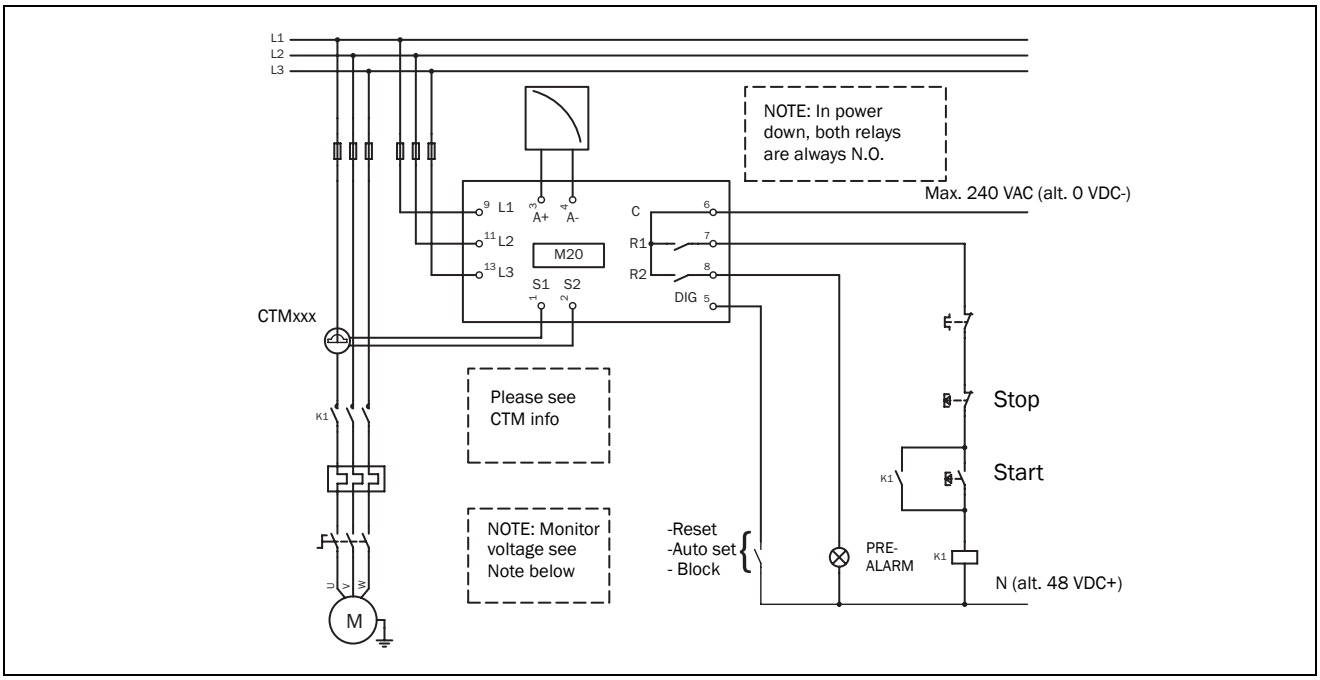

Fig. 2 Connection example

NOTE: Make sure that the monitor voltage range e.g. 3x380-500 VAC matches the connected motor/line voltage, e.g. 3x 400 V.

Table 1 Motor and CT less than 100 A

RATED MOTOR CURRENT [A]	CURRENT TRANSFORMER TYPE and NUMBER OF WINDINGS			
	CTM 010	CTM 025	CTM 050	CTM 100
0.4 – 1.0	10			
1.01 – 2.0	5			
2.01 – 3.0	3			
3.1 – 5.0	2			
5.1 – 10.0	1			
10.1 – 12.5		2		
12.6 –25.0		1		
26.0 – 50.0			1	
51.0 – 100.0				1

In order to ensure an accurate calibration of the M20, it is essential that you use the correct CTM and apply the exact number of windings in accordance with the tables.

Table 2 CT greater than 100A

RATED MOTOR CURRENT [A]	CURRENT TRANSFORMER TYPE and NUMBER OF PRIMARY WINDINGS
101 – 150	150:5 + CTM 010 1 + 2
151 – 250	250:5 + CTM 010 1 + 2
251 – 500	500:5 + CTM 010 1 + 2
501 – 999	1000:5 + CTM 010 1 + 2

NOTE: The current transformer (CTMxxx) must be placed in the same phase that is connected to terminal 9, phase L1, see Fig. 2.

Technical Data

Dimensions (WxHxD)	45x90x115 mm (1.77" x 3.54" x 4.53") 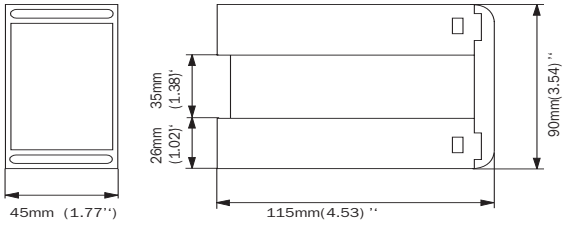
Mounting	35 mm DIN rail 46277
Weight	0.30 kg (10.5 oz)
Supply voltage (±10%)	1x100-240 VAC, 3x100-240 VAC, 3x380-500 VAC 3x525-690 VAC
Frequency	50 or 60 Hz
Current input	Current transformer; CTM 010, 025, 050 and 100. Input 0-55 mA. (>100 A extra transformer needed)
Power consumption	Max. 6 VA
Start-up delay	1-999 s
Hysteresis	0-50% of rated motor power
Response delay max	0.1-500 s
Response delay min	0.1-500 s
Relay output	5 A/240 VAC Resistive, 1.5 A/240 VAC Pilot duty/AC12
Analogue output	Max. load 500 ohm
Digital input	Max. 240 VAC or 48 VDC. High: ≥24 VAC/DC, Low: <1 VAC/DC. Reset >50 ms
Fuse	Max. 10 A
Terminal wire size	Use 75°C copper (CU) wire only. 0.2-4.0 mm^2 single core (AWG12). 0.2-2.5 mm^2 flexible core (AWG14), stripped length 8 mm (0.32")
Terminal tightening torque	0.56-0.79 Nm (5-7 lb-in)
Accuracy	±2%, ±1 unit cos phi>0.5; excl. current transformer; +20°C (+68°F)
Repeatability	±1 unit 24h; +20°C (+68°F)
Temperature tolerance	Max. 0.1%/°C
Operating temperature	-20 to +50°C (-4°F to +122°F)
Storage temperature	-30 to +80°C (-22°F to +176°F)
Protection class	IP20
Approved to	CE (up to 690VAC), UL and cUL (up to 600 VAC)

Article numbers

Article number	Designation
01-2520-20	Emotron M20 1x100-240/3x100-240 VAC
01-2520-40	Emotron M20 3x380-500 VAC
01-2520-50	Emotron M20 3x525-690 VAC

Technical Data for Current Transformer (CT)

Type	Dimension (WxQ)	Weight*	Mounting
CTM 010	27 (35) xØ48mm	0.20 kg	35mm DIN rail 46277
CTM 025	27 (35) xØ48mm	0.20 kg	35mm DIN rail 46277
CTM 050	27 (35) xØ48mm	0.20 kg	35mm DIN rail 46277
CTM 100	45 (58) xØ78mm	0.50 kg	35mm DIN rail 46277

*)Weight including 1m (39 inch) cable. Please note that max. length of the CTM cable is 1 m and this cable cannot be extended.

Accessories and documentation

Article number	Designation
01-2471-10	Current Transformer (CT) CTM010, max. 10 A
01-2471-20	Current Transformer (CT) CTM025, max. 25 A
01-2471-30	Current Transformer (CT) CTM050, max. 50 A
01-2471-40	Current Transformer (CT) CTM100, max. 100 A
01-2368-00	Front Panel Kit 1 (2xterminal covers included)
01-4136-00	2xTerminal covers
01-2551-00	Instruction manual (Swedish)
01-2551-01	Instruction manual (English)
01-2551-02	Instruction manual (German)
01-2551-03	Instruction manual (Dutch)
01-2551-04	Instruction manual (Spanish)
01-2551-08	Instruction manual (French)
01-2551-09	Instruction manual (Russian)

EU (European Union) specifications

EMC	EN 50081-1, EN 50081-2, EN 50082-1, EN 61000-6-2
Electrical safety	IEC 947-5-1
Rated insulated voltage	690 V
Rated impulse withstand voltage	4000 V
Pollution degree	2

Terminals 3, 4, 5, 6, 7 and 8 are basic insulated from the line.
Terminals 3 and 4 are basic insulated from terminals 5, 6, 7 and 8.

Parameter List

Window	Function	Range	Default	Custom	Symbol
00	Alarm indication				
01	Measured shaft power in % of rated power	0-125			%
	Measured shaft power in kW	0-745			kW
	Measured shaft power in % of rated power	0-125			%
	Measured shaft power in HP	0-999			
02	Measured line voltage	90-760 V			V
03	Measured current	0.00-999 A			A
04	Parameter lock	0-999			
05	Monitor function	OVER- and UNDERLOAD, OVERLOAD, UNDERLOAD	OVERLOAD and UNDERLOAD		
11	MAX Main Alarm (relay R1)	0-125	100		%
		0-745	2.2		kW
		0-125	100		%
		0-999	3		
12	MAX Pre-Alarm (relay R2)	0-125	100		%
		0-745	2.2		kW
		0-125	100		%
		0-999	3		
13	MIN Pre-Alarm (relay R2)	0-125	0		%
		0-745	0		kW
		0-125	0		%
		0-999	0		
14	MIN Main Alarm (relay R1)	0-125	0		%
		0-745	0		kW
		0-125	0		%
		0-999	0		
21	MAX Main Alarm margin	0-100	16		%
22	MAX Pre-Alarm margin	0-100	8		%
23	MIN Pre-Alarm margin	0-100	8		%
24	MIN Main Alarm margin	0-100	16		%
31	Start delay	1-999	2		s
32	Response delay max.	0.1-500 s	0.5		s
33	Hysteresis	0-50	0		%
34	Response delay min.	0.1-500s	0.5		s
35*	Pause/Reverse time	3-90	5		s
36*	Autoreset (start attempts)	0-5	0		
41	Rated motor power	0.10-745	2.2		kW
		0.13-999	3		
42	Rated current	0.01-999	5.6		A
43	Number of phases	1PH/3PH	3PH		
61	Main alarm latch	on/OFF	OFF		
62	Alarm at no motor current	on/OFF	OFF		

Window	Function	Range	Default	Custom	Symbol
63	Main Alarm relay R1	nc/no	nc		
64	Pre-Alarm relay R2	nc/no	no		
65*	Relay function	0 = M20 1 = DLM 2 = Reverse	0		
81	Digital input	rES/AU/bLo	rES		
82	Block timer	0.0-90	0.0		s
91	Analogue output	0.20/4.20/20.0/20.4	0.20		
92**	Analogue Out low value	0-100			
93**	Analogue Out high value	0-125			
99	Factory defaults	dEF/USr	dEF		

* See Special functions in chapter 9, Emotron M20 Instruction manual.

** See Setting analogue output range in chapter 9, Emotron M20 Instruction manual.

emotron®
DEDICATED DRIVE

Emotron AB, Mörsaregatan 12, SE-250 24 Helsingborg, Sweden
Tel: +46 42 16 99 00, Fax: +46 42 16 99 49
E-mail: info@emotron.se
Internet: www.emotron.com

Emotron AB 01-4134-01r1 01-09-2007