OMRON

MX2 INVERTER

Born to drive machines

» Omron Quality with a capital 'Q'

» High programming functionality

» Built-in safety

realizing

OMRON

Harmonised motor and machine control

The MX2 is specifically designed to drive machines. It has been developed to harmonise advanced motor and machine control. Thanks to its advanced design and algorithms the MX2 provides smooth control down to zero speed, plus precise operation for fast cyclic operations and torque control capability in open loop. The MX2 also gives you comprehensive functionality for machine control such as positioning, speed synchronisation and logic programming. The MX2 is fully integrated within the Omron smart automation platform. The MX2 is the child of a true leader in machine automation.

MOTOR CONTROL

200% starting torque

- Near stand-still operation (0.5 Hz)
- Smooth control of high inertia loads
- Control of fast cyclic loads

Torque control in open loop

- Ideal for low to medium torque applications
- Can replace a flux vector or servo drive in suitable systems

Special motors

- Permanent magnet motors
- High speed motors up to 1000 Hz

One parameter auto-tuning

- Just by entering the kW rating of the motor the MX2 gives you smooth and safe operation

NO MAINTENANCE 10 YEARS

RoHS Compliant

WARRANTY 3 YEARS

TÜVRheinland®

MACHINE CONTROL

Safety inside

- Conforms to safety norm ISO-13849 CAT3 performance level PL d
- 2 Safety inputs
- External device monitoring (EDM)

Logic programming

- Flow chart programming
- Text editor
- Intuitive - up to 5 tasks in parallel

Positioning

- Up to 8 pre-set positions with "Homing"
- Speed synchronisation

Integrated in the Omron Smart Automation

- CX-Drive programming tool connected via integrated USB port on MX2.
- Modbus RS485 built-in
- Option units for EtherCAT, Profibus, DeviceNet, ML-II and more...

100% Control...

High starting torque and torque control capability in open loop mode give you full control of your machine dynamics and performance. Options for all of the major fieldbus systems and a 24 VDC external supply keeps you in full control of your machine operation.

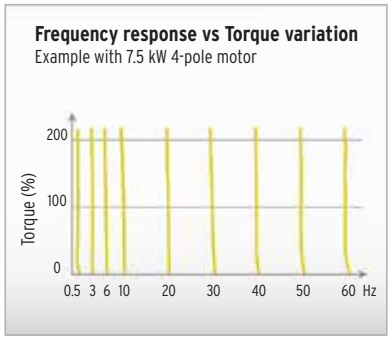

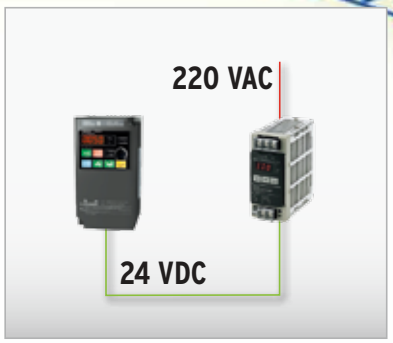

Torque master

The MX2 delivers 200% starting torque near stand-still (0.5 Hz) and can operate in torque control in open loop mode. This allows the MX2 to be used in applications where closed loop AC vector drives were previously used.

Easy network integration

Built-in RS485 Modbus communications and standard industrial networks, such as EtherCAT (compliant with CoE - CiA402 Drive profile -), MECHATROLINK-II, DeviceNet, Profibus or CompoNet as options.

External 24 VDC for continuous operation

With no additional hardware, a 24 VDC connection to the MX2 ensures the CPU is always in control, even if the main input is removed. This feature is vital in providing a controlled stop in emergency situations and in keeping the network communications operating.

...0% risk!

Safety is embedded in the MX2, according to ISO 13849-1, Cat 3, with two safety inputs and an External Device Monitoring (EDM) output.
No external contactors on the motor side are required, meaning simpler wiring for the user.

Safety embedded; ISO 13849-1, cat 3

Dual contactors at the output of the inverter are no longer required. Direct connection to a safety controller ensures compliance to ISO 13849-1, cat 3.

EDM monitoring output

An External Device Monitoring (EDM) output confirms the safety status of the inverter, saving you the cost and wiring of external devices to carry out the same function.

Direct integration into the safety circuit

MX2 inverters can fit easily into the safety circuit. The safety inputs can be linked from one inverter to another without additional safety relays.

Position and run!

The MX2 is a drive and position controller in one, ideal for modular machines where moderate positional accuracy is required. Speed synchronisation is also possible, with no additional programming required.

Speed synchronisation

With no external hardware required, and via standard parameter settings, speed synchronisation can be achieved. The MX2 will act as a speed follower to an external pulse generator/ encoder signal up to 32 KHz.

Positioning functionality

Specially developed application functionality enables the MX2 to solve simple positioning tasks without the need for an external controller. Up to 8 positions, plus home, can be selected by the user, and furthermore, the MX2 can be switched between speed and position mode.

Program and play!

The MX2 gives you the power to create smart solutions using PLC functionality, as standard. Via an intuitive flow chart programming tool, you can create programs with up to 1000 lines of code and with 5 tasks running in parallel.

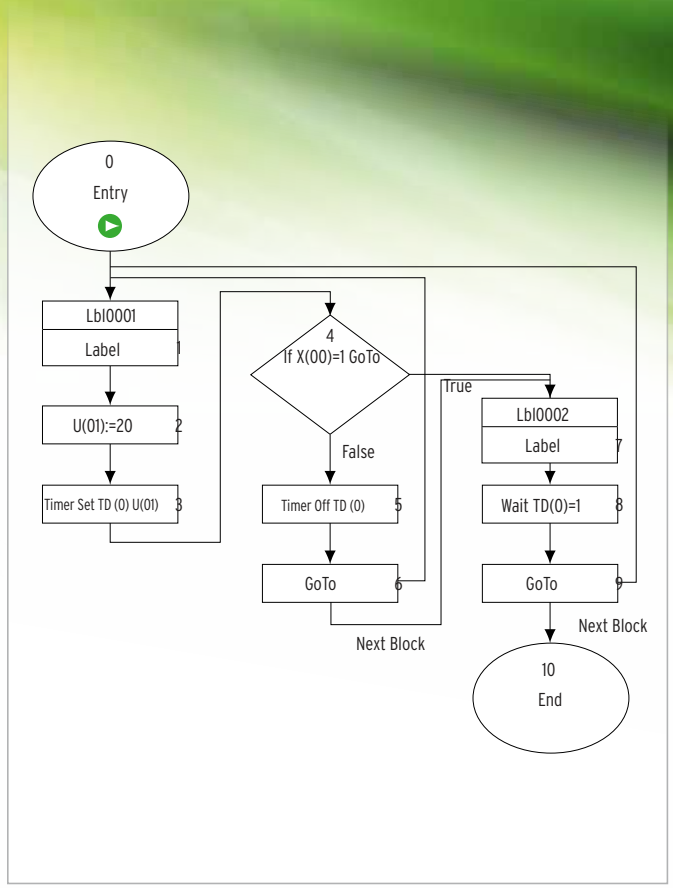

Free to program

- Intuitive and user friendly flow chart programming
- Integrated in CX-Drive
- Up to 1000 lines in a program
- 5 tasks can run in parallel

MX2

Born to drive machines

- Current vector control
- High starting torque: 200% at 0.5 Hz
- Double rating VT 120%/1 min and CT 150%/1 min
- IM & PM motor control
- Torque control in open loop vector
- Positioning functionality
- Built-in application functionality (i.e. Brake control)
- Built-in logic programing
- Safety embedded compliant with ISO13849-1 (double input circuit and external device monitor EDM)
- USB port for PC programming
- 24 VDC backup supply for control board
- Fieldbus communications: Modbus, DeviceNet, Profibus, CompoNet, EtherCAT, ML-II and EtherNet/IP
- PC configuration tool: CX-Drive
- RoHS, CE, cULus

Ratings

- 200 V Class single-phase 0.1 to 2.2 kW
- 200 V Class three-phase 0.1 to 15.0 kW
- 400 V Class three-phase 0.4 to 15.0 kW

System configuration

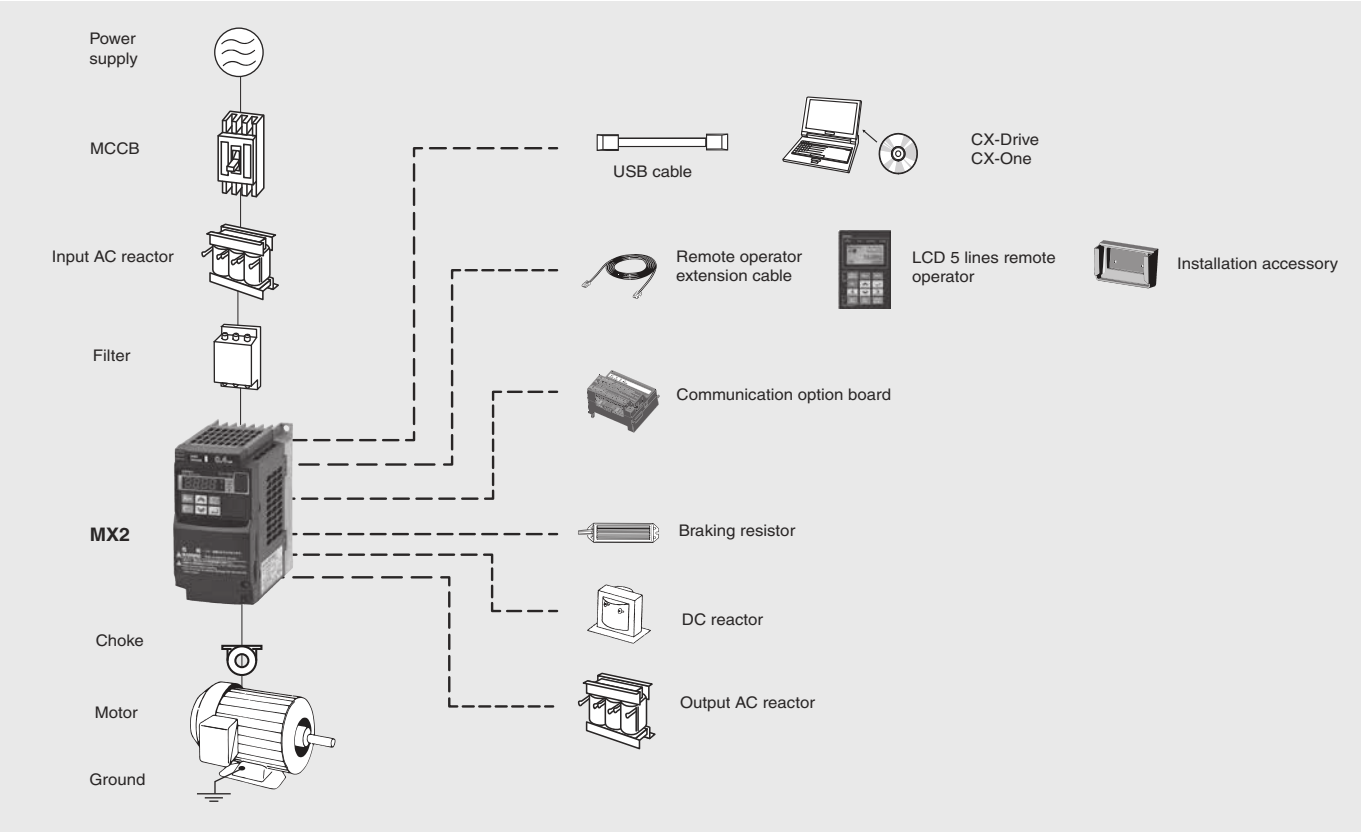

Specifications

Type designation

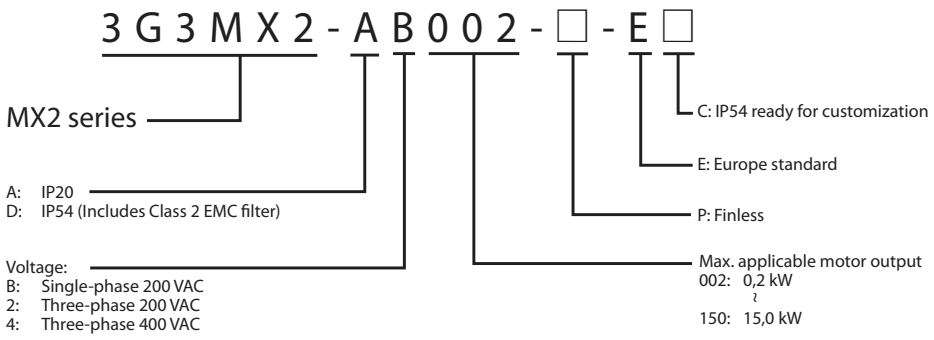

200 V class

Single-phase: 3G3MX2-□			B001	B002	B004	B007[1]	B015	B022	-	-	-	-	-
Three-phase: 3G3MX2-□			2001	2002	2004	2007	2015	2022	2037	2055	2075	2110	2150
Motor kW[2]	For VT setting		0.2	0.4	0.55	1.1	2.2	3.0	5.5	7.5	11	15	18.5
	For CT setting		0.1	0.2	0.4	0.75	1.5	2.2	3.7	5.5	7.5	11	15
Output characteristics	Inverter capacity kVA	200 VT	0.4	0.6	1.2	2.0	3.3	4.1	6.7	10.3	13.8	19.3	23.9
		200 CT	0.2	0.5	1.0	1.7	2.7	3.8	6.0	8.6	11.4	16.2	20.7
		240 VT	0.4	0.7	1.4	2.4	3.9	4.9	8.1	12.4	16.6	23.2	28.6
		240 CT	0.3	0.6	1.2	2.0	3.3	4.5	7.2	10.3	13.7	19.5	24.9
	Rated output current (A) at VT		1.2	1.9	3.5	6.0	9.6	12.0	19.6	30.0	40.0	56.0	69.0
	Rated output current (A) at CT		1.0	1.6	3.0	5.0	8.0	11.0	17.5	25.0	33.0	47.0	60.0
	Max. output voltage		Proportional to input voltage: 0..240 V										
	Max. output frequency		400 Hz										
Power supply	Rated input voltage and frequency		Single-phase 200..240 V 50/60 Hz 3-phase 200..240 V 50/60 Hz										
	Allowable voltage fluctuation		-15%..+10%										
	Allowable frequency fluctuation		5%										
Braking torque		At short-time deceleration At capacitor feedback	100%: <50Hz 50%: <60Hz				70%: <50Hz 50%: <60Hz	Approx 20%		-			
Cooling method			Self cooling[3]				Forced-air-cooling						

1. Three phase model use forced-air-cooling but single phase model is self cooling.
2. Based on a standard 3-Phase standard motor.
3. Forced air cooling for IP54 models.

400 V class

Three-phase: 3G3MX2-□			4004	4007	4015	4022	4030	4040	4055	4075	4110	4150
Motor kW[1]	For VT setting		0.75	1.5	2.2	3.0	4.0	5.5	7.5	11	15	18.5
	For CT setting		0.4	0.75	1.5	2.2	3.0	4.0	5.5	7.5	11	15
Output characteristics	Inverter capacity kVA	380 VT	1.3	2.6	3.5	4.5	5.7	7.3	11.5	15.1	20.4	25.0
		380 CT	1.1	2.2	3.1	3.6	4.7	6.0	9.7	11.8	15.7	20.4
		480 VT	1.7	3.4	4.4	5.7	7.3	9.2	14.5	19.1	25.7	31.5
		480 CT	1.4	2.8	3.9	4.5	5.9	7.6	12.3	14.9	19.9	25.7
	Rated output current (A) at VT		2.1	4.1	5.4	6.9	8.8	11.1	17.5	23.0	31.0	38.0
	Rated output current (A) at CT		1.8	3.4	4.8	5.5	7.2	9.2	14.8	18.0	24.0	31.0
	Max. output voltage		Proportional to input voltage: 0..480 V									
	Max. output frequency		400 Hz									
Power supply	Rated input voltage and frequency		3-phase 380..480 V 50/60 Hz									
	Allowable voltage fluctuation		-15%..+10%									
	Allowable frequency fluctuation		5%									
Braking torque		At short-time deceleration At capacitor feedback	100%: <50Hz 50%: <60Hz				70%: <50Hz 50%: <60Hz	-				
Cooling method			Self cooling[2]		Forced-air-cooling							

1. Based on a standard 3-Phase standard motor.
2. Forced air cooling for IP54 models.

Specifications

Common specifications

Model number 3G3MX2		Specifications
Control functions	Control methods	Phase-to-phase sinusoidal pulse with modulation PWM (Sensorless vector control, V/F)
	Output frequency range	0.10..400.00 Hz
	Frequency precision	Digital set value: ±0.01% of the max. frequency
		Analogue set value: ±0.2% of the max. frequency (25 ±10ºC)
	Resolution of frequency set value	Digital set value: 0.01 Hz
		Analogue set value: 1/1000 of maximum frequency
	Resolution of output frequency	0.01Hz
	Starting torque	200% / 0.5 Hz
	Overload capability	Dual rating: Heavy duty (CT): 150% for 1 minute Normal Duty (VT): 120% for 1 minute
	Frequency set value	0 to 10 VDC (10 KΩ), 4 to 20 mA (100 Ω), RS485 Modbus, Network options
	V/f Characteristics	Constant/ reduced torque, free V/f
Functionality	Inputs signals	FW (forward run command), RV (reverse run command), CF1~CF4 (multi-stage speed setting), JG (jog command), DB (external braking), SET (set second motor), 2CH (2-stage accel./decel. command), FRS (free run stop command), EXT (external trip), USP (startup function), CS (commercial power switchover), SFT (soft lock), AT (analog input selection), RS (reset), PTC (thermistor thermal protection), STA (start), STP (stop), F/R (forward/reverse), PID (PID disable), PIDC (PID reset), UP (remote control up function), DWN (remote control down function), UDC (remote control data clear), OPE (operator control), SF1~SF7 (multi-stage speed setting; bit operation), OLR (overload restriction), TL (torque limit enable), TRQ1 (torque limit changeover1), TRQ2 (torque limit changeover2), BOK (Braking confirmation), LAC (LAD cancellation), PCLR (position deviation clear), ADD (add frequency enable), F-TM (force terminal mode), ATR (permission of torque command input), KHC (Cumulative power clear), MI1~MI7 (general purpose inputs for Drive Programming), AHD (analog command hold), CP1~CP3 (multistage-position switches), ORL (limit signal of zero-return), ORC (trigger signal of zero-return), SPD (speed/position changeover), GS1~GS2 (STO inputs, safety related signals), 485 (Starting communication signal), PRG (executing Drive Programming), HLD (retain output frequency), ROK (permission of run command), EB (rotation direction detection of B-phase), DISP (display limitation), OP (option control signal), NO (no function), PSET (preset position)
	Output signals	RUN (run signal), FA1~FA5 (frequency arrival signal), OL,OL2 (overload advance notice signal), OD (PID deviation error signal), AL (alarm signal), OTQ (over/under torque threshold), UV (under-voltage), TRQ (torque limit signal), RNT (run time expired), ONT (power ON time expired), THM (thermal warning), BRK (brake release), BER (brake error), ZS (0Hz detection), DSE (speed deviation excessive), POK (positioning completion), ODc (analog voltage input disconnection), OIDc (analog current input disconnection), FBV (PID second stage output), NDc (network disconnect detection), LOG1~LOG3 (Logic output signals), WAC (capacitor life warning), WAF (cooling fan warning), FR (starting contact), OHF (heat sink overheat warning), LOC (Low load), MO1~MO3 (general outputs for Drive Programming), IRDY (inverter ready), FWR (forward operation), RVR (reverse operation), MJA (major failure), WCO (window comparator O), WCOI (window comparator OI), FREF (frequency command source), REF (run command source), SETM (second motor in operation), EDM (STO (safe torque off) performance monitor), OP (option control signal), NO (no function)
	Standard functions	Free-V/f, manual/automatic torque boost, output voltage gain adjustment, AVR function, reduced voltage start, motor data selection, auto-tuning, motor stabilization control, reverse running protection, simple position control, simple torque control, torque limiting, automatic carrier frequency reduction, energy saving operation, PID function, non-stop operation at instantaneous power failure, brake control, DC injection braking, dynamic braking (BRD), frequency upper and lower limiters, jump frequencies, curve accel and decel (S, U, inversed U,EL-S), 16-stage speed profile, fine adjustment of start frequency, accel and decel stop, process jogging, frequency calculation, frequency addition, 2-stage accel/decel, stop mode selection, start/end freq., analog input filter, window comparators, input terminal response time, output signal delay/hold function, rotation direction restriction, stop key selection, software lock, safe stop function, scaling function, display restriction, password function, user parameter, initialization, initial display selection, cooling fan control, warning, trip retry, frequency pull-in restart, frequency matching, overload restriction, over current restriction, DC bus voltage AVR
	Analogue inputs	2 analogue inputs 0 to 10 V (10 KΩ), 4 to 20 mA (100 Ω)
	Pulse train input terminal	0 to 24 V, up to 32 kHz
	Accel/Decel times	0.01 to 3600.0 s (line/curve selection), 2nd accel/decel setting available
	Display	Status indicator LED's Run, Program, Alarm, Power, Hz, Amps
		Digital operator: Available to monitor 32 items: frequency reference, output current, output frequency...
Protection functions	Motor overload protection	Electronic Thermal overload relay and PTC thermistor input
	Instantaneous overcurrent	200% of rated current
	Overload	Dual rating: Heavy duty (CT): 150% for 1 minute Normal Duty (VT): 120% for 1 minute
	Overvoltage	800 V for 400 V type and 400 V for 200 V type
	Undervoltage	345 V for 400 V type and 172.5 V for 200 V type
	Momentary power loss	Following items are selectable: Alarm, decelerates to stop, decelerates to stop with DC bus controlled, restart
	Cooling fin overheat	Temperature monitor and error detection
	Stall prevention level	Stall prevention during acceleration/deceleration and constant speed
	Ground fault	Detection at power-on
	Power charge indication	On when power is supplied to the control part
Ambient conditions	Degree of protection	IP20, Varnish coating on PCB & IP54 (For 3G3MX2-D□ type)
	Ambient humidity	90% RH or less (without condensation)
	Storage temperature	-20ºC..+65ºC (short-term temperature during transportation)
	Ambient temperature[1]	–10°C to 50ºC (Both the carrier frequency and output current need to be reduced over 40ºC)
	Installation	Indoor (no corrosive gas, dust, etc.)
	Installation height	Max. 1000 m
	Vibration	5.9 m/s^2 (0.6G), 10 to 55 Hz

1. Some types of 3G3MX2-D requires special derating depending on installation conditions and carrier frequency selected. Check the manual for details.

Dimensions

Standard models (IP20)

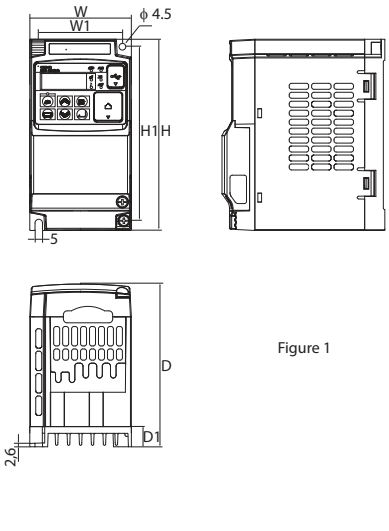

Figure 1

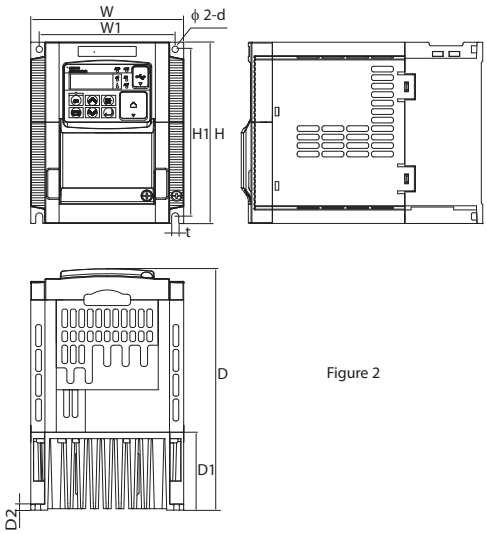

Figure 2

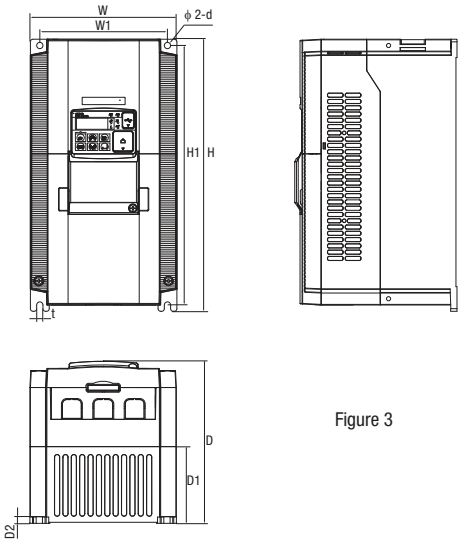

Figure 3

Voltage class	Inverter model 3G3MX2-A□	Figure	Dimensions in mm									
			W	W1	H	H1	t	D	D1	D2	d	Weight (kg)
Single-phase 200 V	B001-E	1	68	56	128	118	-	109	13.5	-	-	1.0
	B002-E											1.0
	B004-E							122.5	27			1.1
	B007-E	2	108	96	128	118		170.5	55	4.4	4.5	1.4
	B015-E											1.8
	B022-E											1.8
Three-phase 200 V	2001-E	1	68	56	128	118	-	109	13.5	-	-	1.0
	2002-E											1.0
	2004-E							122.5	27			1.1
	2007-E							145.5	50			1.2
	2015-E	2	108	96	128	118		170.5	55	4.4	4.5	1.6
	2022-E											1.8
	2037-E	3	140	128	128	118	5	170.5	55	4.4		2.0
	2055-E		140	122	260	248	6	155	73.3	6	6	3.0
	2075-E											3.4
	2110-E		180	160	296	284	7	175	97	5	7	5.1
	2150-E		220	192	350	336			84			7.4
Three-phase 400 V	4004-E	2	108	96	128	118	-	143.5	28	-	-	1.5
	4007-E							170.5	55			1.6
	4015-E											1.8
	4022-E											1.9
	4030-E											1.9
	4040-E	3	140	128	128	118	5	170.5	55	4.4	4.5	2.1
	4055-E			122	260	248	6	155	73.3	6	6	3.5
	4075-E											3.5
	4110-E		180	160	296	284	7	175	97	5	7	4.7
	4150-E											5.2

Option board

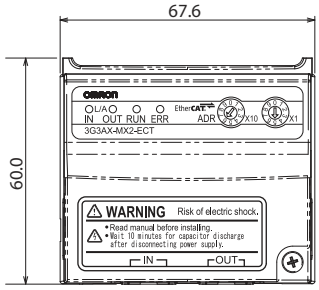

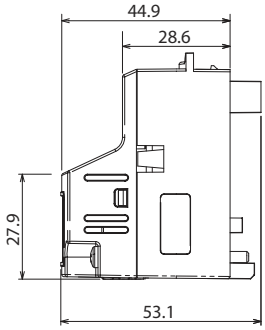

Note: Option boards could be fitted inside the IP54 model.

Finless models

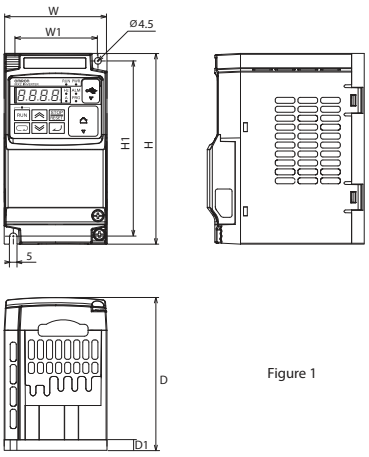

Figure 1

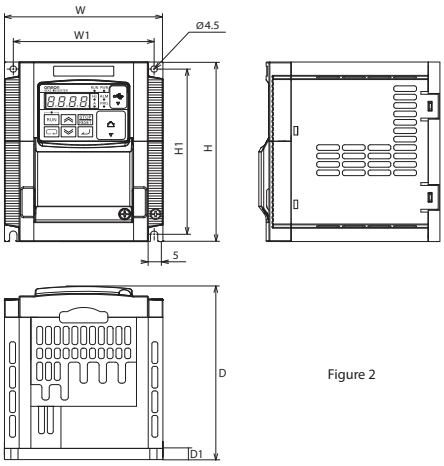

Figure 2

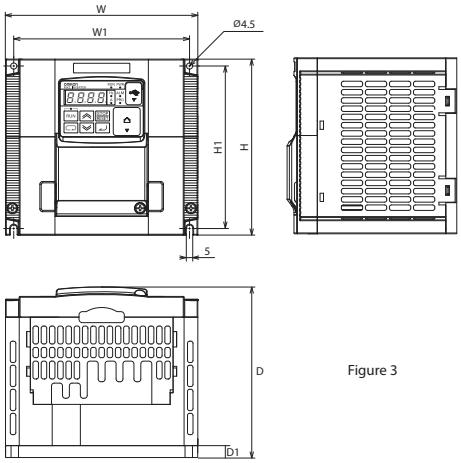

Figure 3

Voltage class	Inverter model 3G3MX2-A□	Figure	Dimensions in mm						
			W	W1	H	H1	D	D1	Weight (kg)
Single-phase 200 V	B001-P-E	1	68	56	128	118	103	7.5	1.1
	B002-P-E								
	B004-P-E								
	B007-P-E	2	108	96	128	118	123	7.5	1.8
	B015-P-E								
	B022-P-E								
Three-phase 200 V	2001-P-E	1	68	56	128	118	103	7.5	1.1
	2002-P-E								
	2004-P-E								
	2007-P-E								
	2015-P-E	2	108	96	128	118	123	7.5	1.8
	2022-P-E								
	2037-P-E	3	140	128	128	118	123	7.5	2.1
Three-phase 400 V	4004-P-E	2	108	96	128	118	123	7.5	1.8
	4007-P-E								
	4015-P-E								
	4022-P-E								
	4030-P-E								
	4040-P-E	3	140	128	128	118	123	7.5	2.1

IP54 models

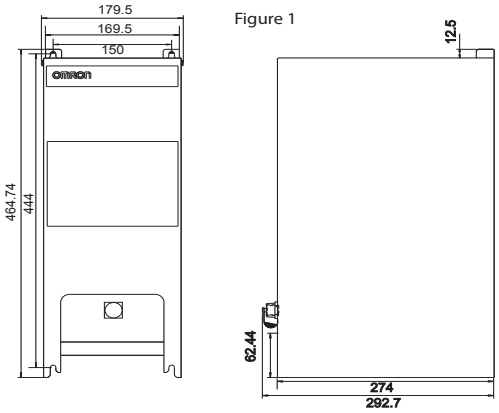

Figure 1

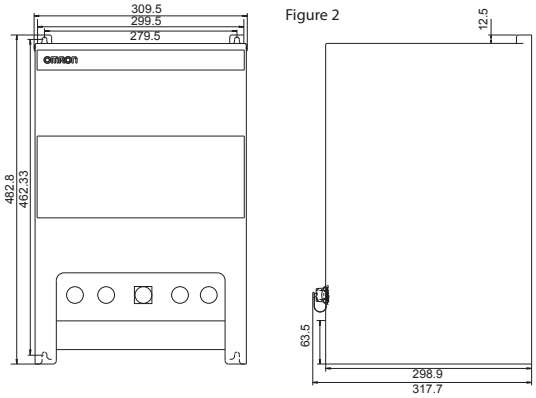

Figure 2

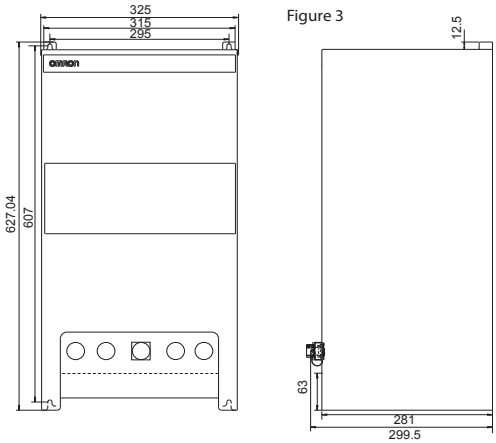

Figure 3

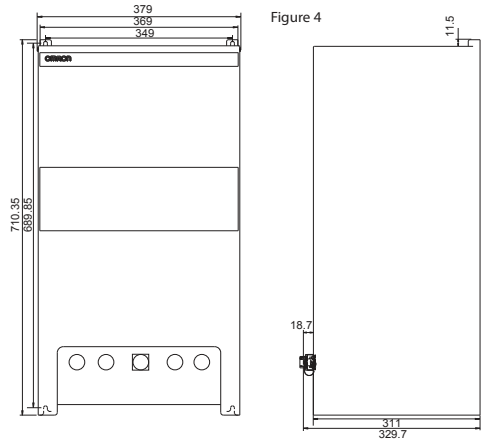

Figure 4

Figure 1	Figure 2	Figure 3	Figure 4
3G3MX2-DB001-E	3G3MX2-DB001-EC	3G3MX2-D2055-EC	3G3MX2-D2110-EC
3G3MX2-DB002-E	3G3MX2-DB002-EC	3G3MX2-D2075-EC	3G3MX2-D2150-EC
3G3MX2-DB004-E	3G3MX2-DB004-EC	3G3MX2-D4055-EC	3G3MX2-D4110-EC
3G3MX2-D2001-E	3G3MX2-DB007-EC	3G3MX2-D4075-EC	3G3MX2-D4150-EC
3G3MX2-D2002-E	3G3MX2-DB015-EC		
3G3MX2-D2004-E	3G3MX2-DB022-EC		
3G3MX2-D2007-E	3G3MX2-D2001-EC		
	3G3MX2-D2002-EC		
	3G3MX2-D2004-EC		
	3G3MX2-D2007-EC		
	3G3MX2-D2015-EC		
	3G3MX2-D2022-EC		
	3G3MX2-D2037-EC		
	3G3MX2-D4004-EC		
	3G3MX2-D4007-EC		
	3G3MX2-D4015-EC		
	3G3MX2-D4022-EC		
	3G3MX2-D4030-EC		
	3G3MX2-D4040-EC		

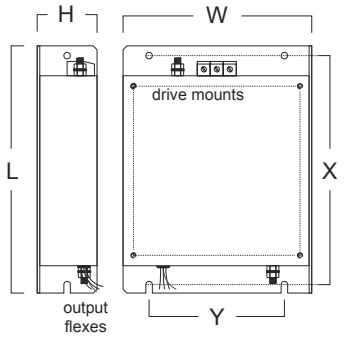

Rasmi footprint filters

Rasmi model		Dimensions					
		W	H	L	X	Y	M
1x200 V	AX-FIM1010-RE□	71	45	169	156	51	M4
	AX-FIM1014-RE□	111	50	169	156	91	M4
	AX-FIM1024-RE□	111	50	169	156	91	M4
3x200 V	AX-FIM2010-RE□	82	50	194	181	62	M4
	AX-FIM2020-RE□	111	50	169	156	91	M4
	AX-FIM2030-RE□	144	50	174	161	120	M4
	AX-FIM2060-RE□	150	52	320	290	122	M5
	AX-FIM2080-RE□	188	62	362	330	160	M5
	AX-FIM2100-RE□	220	62	415	380	192	M6
3x400 V	AX-FIM3005-RE□	114	46	169	156	96	M4
	AX-FIM3010-RE□	114	46	169	156	96	M4
	AX-FIM3014-RE□	144	50	174	161	120	M4
	AX-FIM3030-RE□	150	52	306	290	122	M5
	AX-FIM3050-RE□	182	62	357	330	160	M5

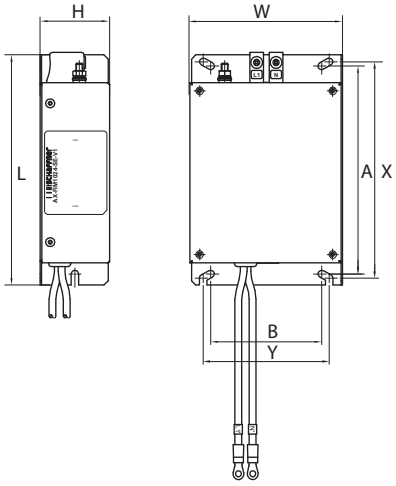

Schaffner footprint filters

Schaffner model		Dimensions							
		W	H	L	X	Y	A	B	M
1x200 V	AX-FIM1010-SE□	70	40	166	156	51	150	50	M5
	AX-FIM1014-SE□	110	45	166	156	91	150	80	M5
	AX-FIM1024-SE□	110	50	166	156	91	150	80	M5
3x200 V	AX-FIM2010-SE□	80	40	191	181	62	150	50	M5
	AX-FIM2020-SE□	110	50	166	156	91	150	80	M5
	AX-FIM2030-SE□	142	50	171	161	120	150	112	M5
	AX-FIM2060-SE□	140	55	304	290	122	286	112	M5
	AX-FIM2080-SE□	180	55	344	330	160	323	140	M5
	AX-FIM2100-SE□	220	65	394	380	192	376	180	M5
3x400 V	AX-FIM3005-SE□	110	50	166	156	91	150	80	M5
	AX-FIM3010-SE□	110	50	166	156	91	150	80	M5
	AX-FIM3014-SE□	142	50	171	161	120	150	112	M5
	AX-FIM3030-SE□	140	55	304	290	122	286	112	M5
	AX-FIM3050-SE□	180	55	344	330	160	323	140	M5

Input AC Reactor

Single-phase

Voltage	Reference	Dimensions								Weight kg
		A	B	C	D	E	F	G	H	
200 V	AX-RAI02000070-DE	84	113	96	101	66	5	7.5	2	1.22
	AX-RAI01700140-DE	84	113	116	101	66	5	7.5	2	1.95
	AX-RAI01200200-DE	84	113	131	101	66	5	7.5	2	2.55
	AX-RAI00630240-DE	84	113	116	101	66	5	7.5	2	1.95

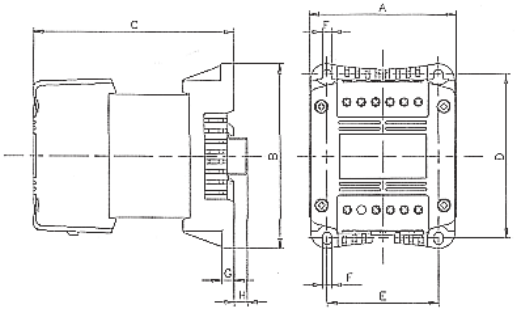

Three-phase

Voltage	Reference	Dimensions						Weight kg
		A	B2	C2	D	E	F	
200 V	AX-RAI02800080-DE	120	70	120	80	52	5.5	1.78
	AX-RAI00880200-DE	120	80	120	80	62	5.5	2.35
	AX-RAI00350335-DE	180	85	190	140	55	6	5.5
	AX-RAI00180670-DE	180	85	190	140	55	6	5.5
400 V	AX-RAI07700050-DE	120	70	120	80	52	5.5	1.78
	AX-RAI03500100-DE	120	80	120	80	62	5.5	2.35
	AX-RAI01300170-DE	120	80	120	80	62	5.5	2.50
	AX-RAI00740335-DE	180	85	190	140	55	6	5.5

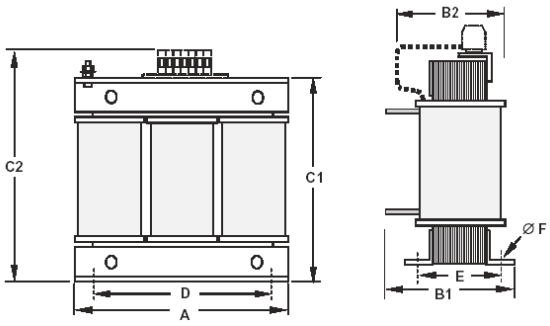

DC Reactor

Voltage	Reference	Dimensions								Weight kg
		A	B	C	D	E	F	G	H	
200 V	AX-RC21400016-DE	84	113	96	101	66	5	7.5	2	1.22
	AX-RC10700032-DE									
	AX-RC06750061-DE			105						1.60
	AX-RC03510093-DE									
	AX-RC02510138-DE			116						1.95
	AX-RC01600223-DE	108	135	124	120	82	6.5	9.5	9.5	3.20
	AX-RC01110309-DE	120	152	136	135	94	7		-	5.20
	AX-RC00840437-DE			146						6.00
	AX-RC00590614-DE	150	177	160	160	115		2		11.4
	AX-RC00440859-DE			182.6						14.3
400 V	AX-RC43000020-DE	84	113	96	101	66	5	7.5	2	1.22
	AX-RC27000030-DE			105						1.60
	AX-RC14000047-DE									
	AX-RC10100069-DE			116						1.95
	AX-RC08250093-DE			131						2.65
	AX-RC06400116-DE	108	135	133	120	82	6.5	9.5	9.5	3.70
	AX-RC04410167-DE	120	152	136	135	94	7		-	5.20
	AX-RC03350219-DE			146						6.00
	AX-RC02330307-DE	150	177	160	160	115	7	2		11.4
	AX-RC01750430-DE			182.6						14.3

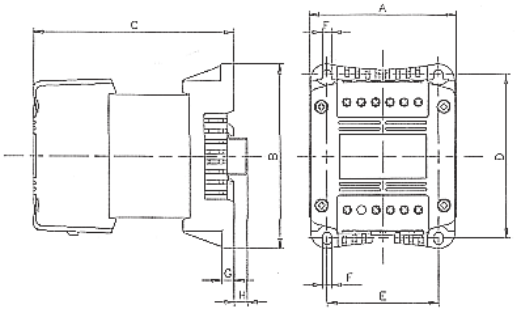

Output AC Reactor

Voltage	Reference	Dimensions						Weight kg
		A	B2	C2	D	E	F	
200 V	AX-RAO11500026-DE	120	70	120	80	52	5.5	1.78
	AX-RAO07600042-DE	120	70	120	80	52	5.5	1.78
	AX-RAO04100075-DE	120	80	120	80	62	5.5	2.35
	AX-RAO03000105-DE	120	80	120	80	62	5.5	2.35
	AX-RAO01830180-DE	180	85	190	140	55	6	5.5
	AX-RAO01150220-DE	180	85	190	140	55	6	5.5
	AX-RAO00950320-DE	180	85	205	140	55	6	6.5
	AX-RAO00630430-DE	180	95	205	140	65	6	9.1
	AX-RAO00490640-DE	180	95	205	140	65	6	9.1
400 V	AX-RAO16300038-DE	120	70	120	80	52	5.5	1.78
	AX-RAO11800053-DE	120	80	120	80	52	5.5	2.35
	AX-RAO07300080-DE	120	80	120	80	62	5.5	2.35
	AX-RAO04600110-DE	180	85	190	140	55	6	5.5
	AX-RAO03600160-DE	180	85	205	140	55	6	6.5
	AX-RAO02500220-DE	180	95	205	140	55	6	9.1
	AX-RAO02000320-DE	180	105	205	140	85	6	11.7

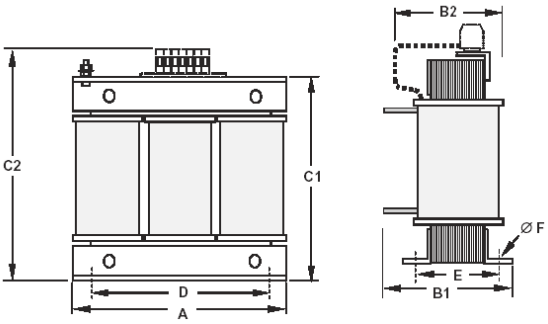

Chokes

Reference	D diameter	Motor kW	Dimensions						Weight kg
			L	W	H	X	Y	m	
AX-FER2102-RE	21	< 2.2	85	22	46	70	-	5	0.1
AX-FER2515-RE	25	< 15	105	25	62	90	-	5	0.2
AX-FER5045-RE	50	< 45	150	50	110	125	30	5	0.7

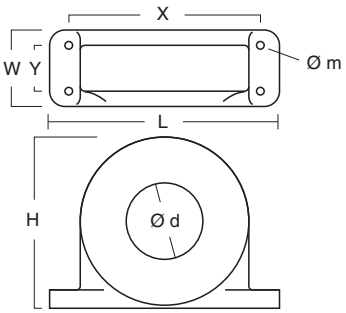

Resistor dimensions

AX-REM00K1xxx

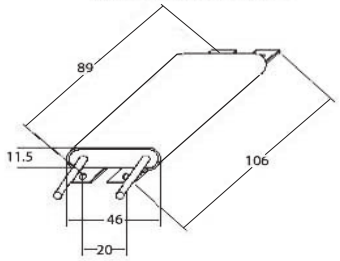

Fig 1

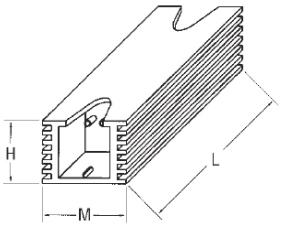

Fig 2

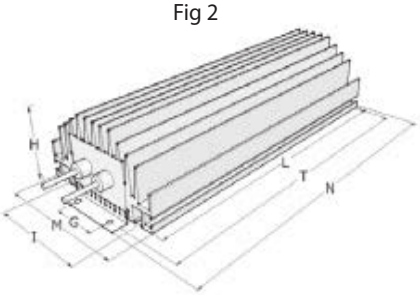

Fig 3

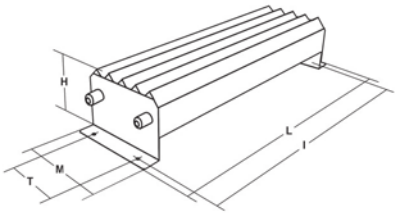

Fig 4

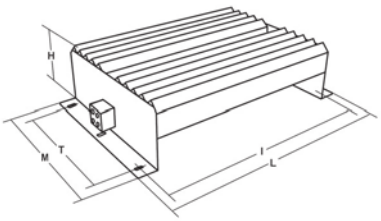

Type	Fig.	Dimensions							Weight
		L	H	M	I	T	G	N	kg
AX-REM00K1400-IE	1	105	27	36	94	-	-	-	0.2
AX-REM00K2070-IE									
AX-REM00K2120-IE									
AX-REM00K2200-IE									
AX-REM00K4075-IE		200	27	36	189	-	-	-	0.425
AX-REM00K4035-IE									
AX-REM00K4030-IE									
AX-REM00K5120-IE		260	27	36	249	-	-	-	0.58
AX-REM00K6100-IE		320	27	36	309	-	-	-	0.73
AX-REM00K6035-IE									
AX-REM00K9070-IE	2	200	61	100	74	211	40	230	1.41
AX-REM00K9020-IE									
AX-REM00K9017-IE									
AX-REM01K9070-IE	3	365	73	105	350	70	-	-	4
AX-REM01K9017-IE									
AX-REM02K1070-IE	4	310	100	240	295	210	-	-	7
AX-REM02K1017-IE									
AX-REM03K5035-IE		365	100	240	350	210	-	-	8
AX-REM03K5010-IE									

Standard connections

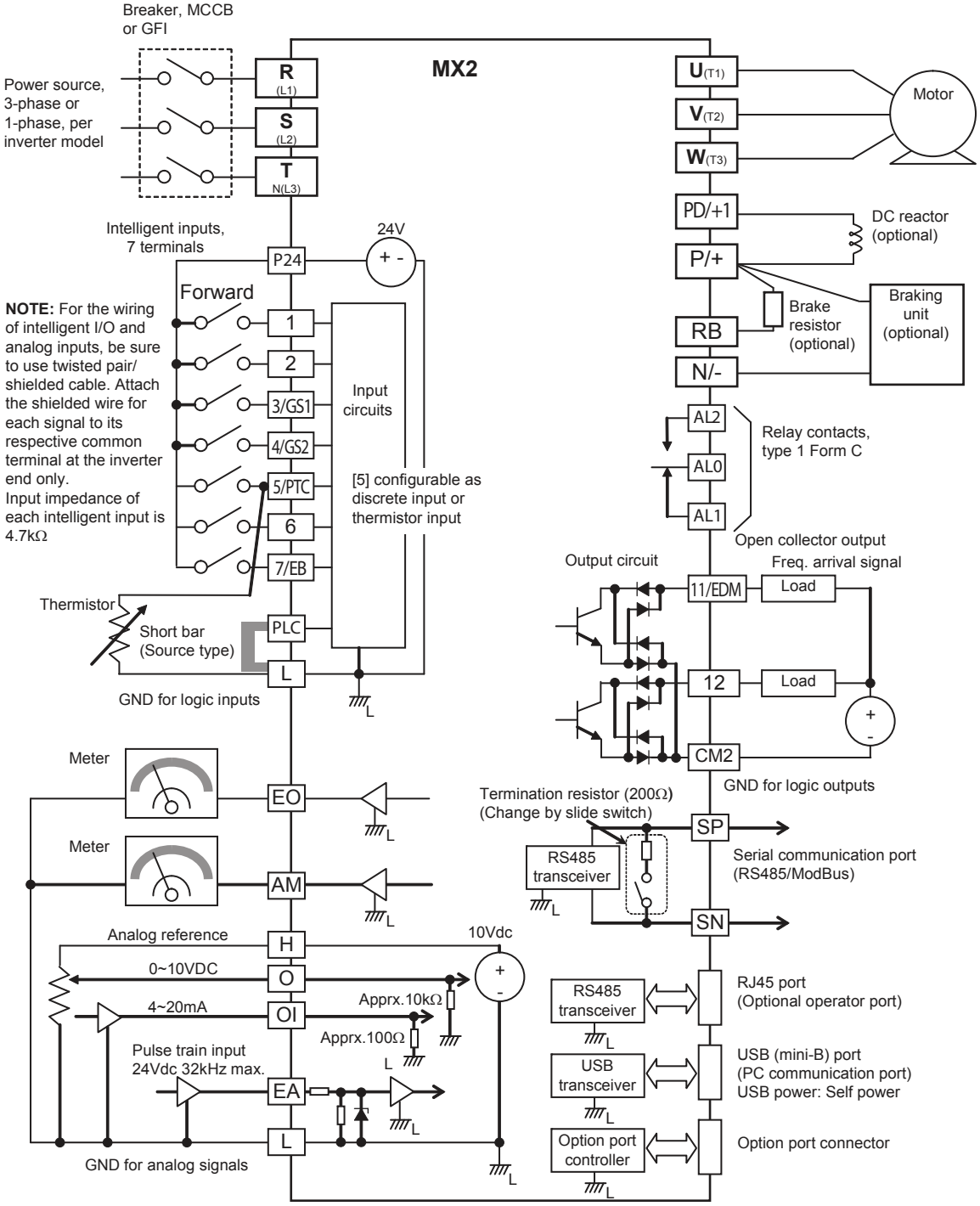

Terminal Block Specifications

Terminal	Name	Function (signal level)
R/L1, S/L2, T/L3	Main circuit power supply input	Used to connect line power to the drive. Drives with single-phase 200 V input power use only terminals R/L1 and N (T/L3), terminal S/L2 is not available for these units
U/T1, V/T2, W/T3	Inverter output	Used to connect the motor
PD/+1, P/+	External DC reactor terminal	Normally connected by the short-circuit bar. Remove the short-circuit bar between +1 and P/+2 when a DC reactor is connected.
P/+, N/-	Regenerative braking unit terminal	Connect optional regenerative braking units (If a braking torque is required)
P/+, RB	Braking resistor terminals	Connect option braking resistor (if a braking torque is required)
⏚	Grounding	For grounding (grounding should conform to the local grounding code.)

Control Circuit

Type	No.	Signal name	Function	Signal level
Digital input signals	PLC	Intelligent input common	Source type: connecting [P24] to [1]-[7] turns inputs ON Sink type: connecting [L] to [1]-[7] turns inputs ON	-
	P24	Internal 24 VDC	24 VDC, 30mA	24 VDC, 100 mA
	1	Multi-function Input selection 1	Factory setting: Forward/ Stop	27 VDC max
	2	Multi-function Input selection 2	Factory setting: Reverse/ Stop	
	3/GS1	Multi-function Input selection 3 / safe stop input 1	Factory setting: External trip	
	4/GS2	Multi-function Input selection 4 / safe stop input 2	Factory setting: Reset	
	5/PTC	Multi-function Input selection 5 / PTC thermistor input	Factory setting: Multi-step speed reference 1	
	6	Multi-function input selection 6	Factory setting: Multi-step speed reference 2	
	7/EB	Multi-function input selection 7 / Pulse train input B	Factory setting: Jog	
	L	Multi-function Input selection common (in upper row)	--	--
Pulse train	EA	Pulse train input A	Factory setting: Speed reference	32 kHz max 5 to 24 VDC
	EO	Pulse train output	LAD frequency	10 VDC 2 mA 32 kHz max
Analog input signal	H	Frequency reference power supply	10 VDC 10 mA max	
	O	Voltage frequency reference signal	0 to 10 VDC (10 kΩ)	
	OI	Current frequency reference signal	4 to 20 mA (250 Ω)	
	L	Frequency reference common (bottom row)	--	
Digital output signals	11/EDM	Discrete logic output 1 / EDM output	Factory setting: During Run	27 VDC, 50 mA max EDM based on ISO13849-1
	12	Discrete logic output 2	Factory setting: Frequency arrival type 1	
	CM2	GND logic output	--	
	AL0	Relay common contact	Factory setting: Alarm signal Under normal operation AL1 - AL0 Closed AL2 - AL0 Open	R load 250 VAC 2.5 A 30 VDC 3.0 A I load 250 VAC 0.2 A 30 VDC 0.7 A
	AL1	Relay contact, normally open		
	AL2	Relay contact, normally closed		
Monitor Signal	AM	Analog voltage output	Factory setting: LAD frequency	0 to 10 VDC 1 mA
Comms	SP	Serial communication terminal	RS485 Modbus communication	
	SN			

Side by side mounting

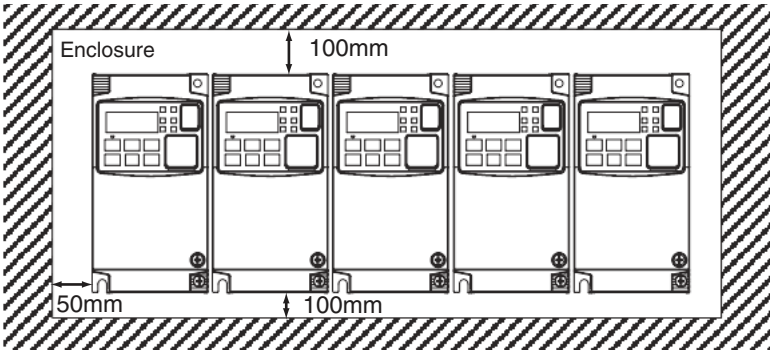

Inverter heat loss
Single-phase 200 V class

Model 3G3MX2		AB001	AB002	AB004	AB007	AB015	AB022
Inverter capacity kVA	200V VT	0.4	0.6	1.2	2.0	3.3	4.1
	200V CT	0.2	0.5	1.0	1.7	2.7	3.8
	240V VT	0.4	0.7	1.4	2.4	3.9	4.9
	240V CT	0.3	0.6	1.2	2.0	3.3	4.5
Rated current (A) VT		1.2	1.9	3.4	6.0	9.6	12.0
Rated current (A) CT		1.0	1.6	3.0	5.0	8.0	11.0
Total heat loss		12	22	30	48	79	104
Efficiency at rated load		89.5	90	93	94	95	95.5
Cooling Method		Self cooling				Forced-air-cooling	

Three-phase 200 V class

Model 3G3MX2		A2001	A2002	A2004	A2007	A2015	A2022	A2037	A2055	A2075	A2110	A2150
Inverter capacity kVA	200 VT	0.4	0.6	1.2	2.0	3.3	4.1	6.7	10.3	13.8	19.3	23.9
	200 CT	0.2	0.5	1.0	1.7	2.7	3.8	6.0	8.6	11.4	16.2	20.7
	240 VT	0.4	0.7	1.4	2.4	3.9	4.9	8.1	12.4	16.6	23.2	28.6
	240 CT	0.3	0.6	1.2	2.0	3.3	4.5	7.2	10.3	13.7	19.5	24.9
Rated current (A) VT		1.2	1.9	3.4	6.0	9.6	12.0	19.6	30.0	40.0	56.0	69.0
Rated current (A) CT		1.0	1.6	3.0	5.0	8.0	11.0	17.5	25.0	33.0	47.0	60.0
Total heat loss		12	22	30	48	79	104	154	229	313	458	625
Efficiency at rated load		89.5	90	93	94	95	95.5	96	96	96	96	96
Cooling Method		Self cooling			Forced-air-cooling							

Three-phase 400 V class

Model 3G3MX2		A4004	A4007	A4015	A4022	A4030	A4040	A4055	A4075	A4110	A4150
Inverter capacity kVA	380V VT	1.3	2.6	3.5	4.5	5.7	7.3	11.5	15.1	20.4	25.0
	380V CT	1.1	2.2	3.1	3.6	4.7	6.0	9.7	11.8	15.7	20.4
	480V VT	1.7	3.4	4.4	5.7	7.3	9.2	14.5	19.1	25.7	31.5
	480V CT	1.4	2.8	3.9	4.5	5.9	7.6	12.3	14.9	19.9	25.7
Rated current (A) VT		2.1	4.1	5.4	6.9	8.8	11.1	17.5	23.0	31.0	38.0
Rated current (A) CT		1.8	3.4	4.8	5.5	7.2	9.2	14.8	18.0	24.0	31.0
Total heat loss		35	56	96	116	125	167	229	296	411	528
Efficiency at rated load		92	93	94	95	96	96	96	96.2	96.4	96.6
Cooling Method		Self cooling		Forced-air-cooling							

Input AC Reactor

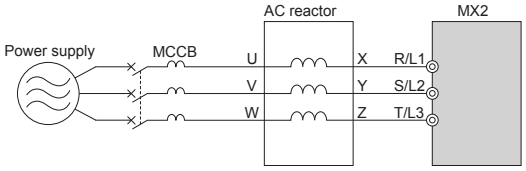

1 phase 200 V class				3 phase 200 V class				400 V class			
Max. applicable motor output kW	Reference	Current value A	Inductance mH	Max. applicable motor output kW	Reference	Current value A	Inductance mH	Max. applicable motor output kW	Reference	Current value A	Inductance mH
0.4	AX-RAI02000070-DE	7.0	2.0	1.5	AX-RAI02800080-DE	8.0	2.8	1.5	AX-RAI07700050-DE	5.0	7.7
0.75	AX-RAI01700140-DE	14.0	1.7	3.7	AX-RAI00880200-DE	20.0	0.88	4.0	AX-RAI03500100-DE	10.0	3.5
1.5	AX-RAI01200200-DE	20.0	1.2	7.5	AX-RAI00350335-DE	33.5	0.35	7.5	AX-RAI01300170-DE	17.0	1.3
2.2	AX-RAI00630240-DE	24.0	0.63	15	AX-RAI00180670-DE	67.0	0.18	15	AX-RAI00740335-DE	33.5	0.74

DC Reactor

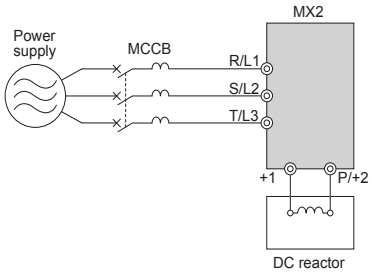

200 V class				400 V class			
Max. applicable motor output kW	Reference	Current value A	Inductance mH	Max. applicable motor output kW	Reference	Current value A	Inductance mH
0.2	AX-RC21400016-DE	1.6	21.4	0.4	AX-RC43000020-DE	2.0	43.0
0.4	AX-RC10700032-DE	3.2	10.7	0.7	AX-RC27000030-DE	3.0	27.0
0.7	AX-RC06750061-DE	6.1	6.75	1.5	AX-RC14000047-DE	4.7	14.0
1.5	AX-RC03510093-DE	9.3	3.51	2.2	AX-RC10100069-DE	6.9	10.1
2.2	AX-RC02510138-DE	13.8	2.51	3.0	AX-RC08250093-DE	9.3	8.25
3.7	AX-RC01600223-DE	22.3	1.60	4.0	AX-RC06400116-DE	11.6	6.40
5.5	AX-RC01110309-DE	30.9	1.11	5.5	AX-RC04410167-DE	16.7	4.41
7.5	AX-RC00840437-DE	43.7	0.84	7.5	AX-RC03350219-DE	21.9	3.35
11.0	AX-RC00590614-DE	61.4	0.59	11.0	AX-RC02330307-DE	30.7	2.33
15.0	AX-RC00440859-DE	85.9	0.44	15.0	AX-RC01750430-DE	43.0	1.75

Output AC Reactor

200 V class				400 V class			
Max. applicable motor output kW	Reference	Current value A	Inductance mH	Max. applicable motor output kW	Reference	Current value A	Inductance mH
0.4	AX-RAO11500026-DE	2.6	11.50	1.5	AX-RAO16300038-DE	3.8	16.30
0.75	AX-RAO07600042-DE	4.2	7.60				
1.5	AX-RAO04100075-DE	7.5	4.10				
2.2	AX-RAO03000105-DE	10.5	3.00	2.2	AX-RAO11800053-DE	5.3	11.80
3.7	AX-RAO01830160-DE	16.0	1.83	4.0	AX-RAO07300080-DE	8.0	7.30
5.5	AX-RAO01150220-DE	22.0	1.15	5.5	AX-RAO04600110-DE	11.0	4.60
7.5	AX-RAO00950320-DE	32.0	0.95	7.5	AX-RAO03600160-DE	16.0	3.60
11	AX-RAO00630430-DE	43.0	0.63	11	AX-RAO02500220-DE	22.0	2.50
15	AX-RAO00490640-DE	64.0	0.49	15	AX-RAO02000320-DE	32.0	2.00

Ordering information

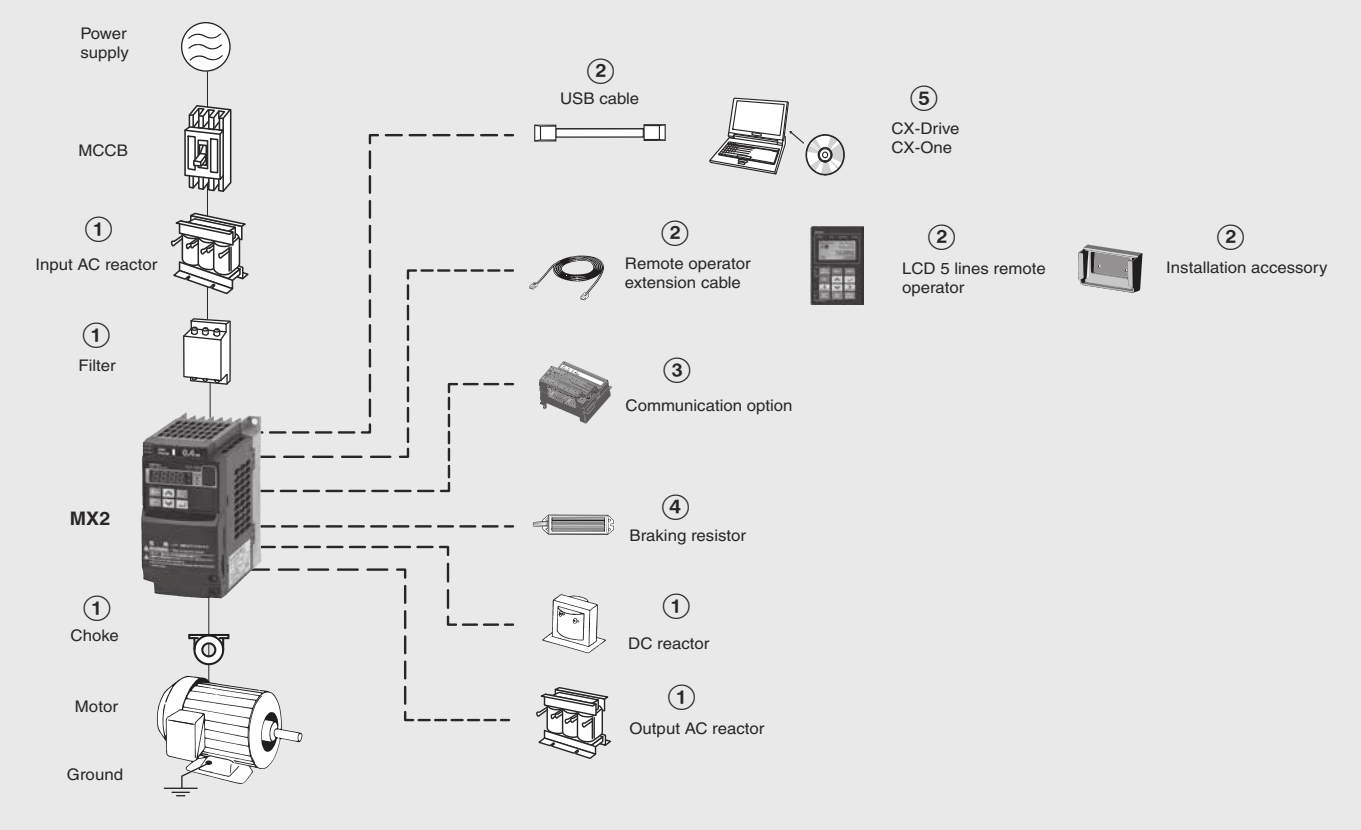

3G3MX2

Specifications					Model		
Voltage class	Constant torque		Variable torque		Standard (IP20)	Finless	IP54
	Max motor kW	Rated current A	Max motor kW	Rated current A			
Single-phase 200 V	0.1	1.0	0.2	1.2	3G3MX2-AB001-E	3G3MX2-AB001-P-E	3G3MX2-DB001-E/EC
	0.2	1.6	0.4	1.9	3G3MX2-AB002-E	3G3MX2-AB002-P-E	3G3MX2-DB002-E/EC
	0.4	3.0	0.55	3.5	3G3MX2-AB004-E	3G3MX2-AB004-P-E	3G3MX2-DB004-E/EC
	0.75	5.0	1.1	6.0	3G3MX2-AB007-E	3G3MX2-AB007-P-E	3G3MX2-DB007-EC
	1.5	8.0	2.2	9.6	3G3MX2-AB015-E	3G3MX2-AB015-P-E	3G3MX2-DB015-EC
	2.2	11.0	3.0	12.0	3G3MX2-AB022-E	3G3MX2-AB022-P-E	3G3MX2-DB022-EC
Three-phase 200 V	0.1	1.0	0.2	1.2	3G3MX2-A2001-E	3G3MX2-A2001-P-E	3G3MX2-D2001-E/EC
	0.2	1.6	0.4	1.9	3G3MX2-A2002-E	3G3MX2-A2002-P-E	3G3MX2-D2002-E/EC
	0.4	3.0	0.55	3.5	3G3MX2-A2004-E	3G3MX2-A2004-P-E	3G3MX2-D2004-E/EC
	0.75	5.0	1.1	6.0	3G3MX2-A2007-E	3G3MX2-A2007-P-E	3G3MX2-D2007-E/EC
	1.5	8.0	2.2	9.6	3G3MX2-A2015-E	3G3MX2-A2015-P-E	3G3MX2-D2015-EC
	2.2	11.0	3.0	12.0	3G3MX2-A2022-E	3G3MX2-A2022-P-E	3G3MX2-D2022-EC
	3.7	17.5	5.5	19.6	3G3MX2-A2037-E	3G3MX2-A2037-P-E	3G3MX2-D2037-EC
	5.5	25.0	7.5	30.0	3G3MX2-A2055-E	-	3G3MX2-D2055-EC
	7.5	33.0	11	40.0	3G3MX2-A2075-E	-	3G3MX2-D2075-EC
	11	47.0	15	56.0	3G3MX2-A2110-E	-	3G3MX2-D2110-EC
	15	60.0	18.5	69.0	3G3MX2-A2150-E	-	3G3MX2-D2150-EC
Three-phase 400 V	0.4	1.8	0.75	2.1	3G3MX2-A4004-E	3G3MX2-A4004-P-E	3G3MX2-D4004-EC
	0.75	3.4	1.5	4.1	3G3MX2-A4007-E	3G3MX2-A4007-P-E	3G3MX2-D4007-EC
	1.5	4.8	2.2	5.4	3G3MX2-A4015-E	3G3MX2-A4015-P-E	3G3MX2-D4015-EC
	2.2	5.5	3.0	6.9	3G3MX2-A4022-E	3G3MX2-A4022-P-E	3G3MX2-D4022-EC
	3.0	7.2	4.0	8.8	3G3MX2-A4030-E	3G3MX2-A4030-P-E	3G3MX2-D4030-EC
	4.0	9.2	5.5	11.1	3G3MX2-A4040-E	3G3MX2-A4040-P-E	3G3MX2-D4040-EC
	5.5	14.8	7.5	17.5	3G3MX2-A4055-E	-	3G3MX2-D4055-EC
	7.5	18.0	11	23.0	3G3MX2-A4075-E	-	3G3MX2-D4075-EC
	11	24.0	15	31.0	3G3MX2-A4110-E	-	3G3MX2-D4110-EC
	15	31.0	18.5	38.0	3G3MX2-A4150-E	-	3G3MX2-D4150-EC

① Line filters

Inverter		Standard line filter				Low leakage line filter			
		Rasmi		Schaffner		Rasmi		Schaffner	
Voltage	Model 3G3MX2-□	Reference AX-FIM	Current (A)	Reference AX-FIM	Current (A)	Reference AX-FIM	Current (A)	Reference AX-FIM	Current (A)
1Phase 200 VAC	AB001 / AB002 / AB004	1010-RE	10	1010-SE-V1	8	1010-RE-LL	10	1010-SE-LL	10
	AB007	1014-RE	14	1014-SE-V1	14	1014-RE-LL	14	1014-SE-LL	14
	AB015 / AB022	1024-RE	24	1024-SE-V1	27	1024-RE-LL	24	1024-SE-LL	24
3Phase 200 VAC	A2001 / A2002 / A2004 / A2007	2010-RE	10	2010-SE-V1	7.8	2010-RE-LL	10	-	-
	A2015 / A2022	2020-RE	20	2020-SE-V1	16	2020-RE-LL	20	2020-SE-LL	20
	A2037	2030-RE	30	2030-SE-V1	25	2030-RE-LL	30	2030-SE-LL	30
	A2055 / A2075	2060-RE	60	2060-SE-V1	50	2060-RE-LL	60	2060-SE-LL	50
	A2110	2080-RE	80	2080-SE-V1	70	2080-RE-LL	80	-	-
	A2150	2100-RE	100	2100-SE-V1	75	2100-RE-LL	100	-	-
3Phase 400 VAC	A4004 / A4007	3005-RE	5	3005-SE-V1	6	3005-RE-LL	5	3005-SE-LL	5
	A4015 / A4022 / A4030	3010-RE	10	3010-SE-V1	12	3010-RE-LL	10	3010-SE-LL	10
	A4040	3014-RE	14	3014-SE-V1	15	3014-RE-LL	14	3014-SE-LL	15
	A4055 / A4075	3030-RE	30	3030-SE-V1	29	3030-RE-LL	30	3030-SE-LL	30
	A4110 / A4150	3050-RE	50	3050-SE-V1	48	3050-RE-LL	50	3050-SE-LL	50

① Input AC reactors

Inverter		AC Reactor
Voltage	Model 3G3MX2-□	Reference
1-Phase 200 VAC	AB002 / AB004	AX-RAI02000070-DE
	AB007	AX-RAI01700140-DE
	AB015	AX-RAI01200200-DE
	AB022	AX-RAI00630240-DE
3-Phase 200 VAC	A2002 / A2004 / A2007	AX-RAI02800080-DE
	A2015 / A2022 / A2037	AX-RAI00880200-DE
	A2055 / A2075	AX-RAI00350335-DE
	A2110 / A2150	AX-RAI00180670-DE
3-Phase 400 VAC	A4004 / A4007 / A4015	AX-RAI07700050-DE
	A4022 / A4030 / A4040	AX-RAI03500100-DE
	A4055 / A4075	AX-RAI01300170-DE
	A4110 / A4150	AX-RAI00740335-DE

① DC reactors

200V 1-phase		200V 3-phase		400V 3-phase	
Inverter	DC Reactor	Inverter	DC Reactor	Inverter	DC Reactor
3G3MX2-AB001	AX-RC10700032-DE	3G3MX2-A2001	AX-RC21400016-DE	3G3MX2-A4004	AX-RC43000020-DE
3G3MX2-AB002		3G3MX2-A2002		3G3MX2-A4007	AX-RC27000030-DE
3G3MX2-AB004	AX-RC06750061-DE	3G3MX2-A2004	AX-RC10700032-DE	3G3MX2-A4015	AX-RC14000047-DE
3G3MX2-AB007	AX-RC03510093-DE	3G3MX2-A2007	AX-RC06750061-DE	3G3MX2-A4022	AX-RC10100069-DE
3G3MX2-AB015	AX-RC02510138-DE	3G3MX2-A2015	AX-RC03510093-DE	3G3MX2-A4030	AX-RC08250093-DE
3G3MX2-AB022	AX-RC01600223-DE	3G3MX2-A2022	AX-RC02510138-DE	3G3MX2-A4040	AX-RC06400116-DE
-		3G3MX2-A2037	AX-RC01600223-DE	3G3MX2-A4055	AX-RC04410167-DE
		3G3MX2-A2055	AX-RC01110309-DE	3G3MX2-A4075	AX-RC03350219-DE
		3G3MX2-A2075	AX-RC00840437-DE	3G3MX2-A4011	AX-RC02330307-DE
		3G3MX2-A2011	AX-RC00590614-DE	3G3MX2-A4015	AX-RC01750430-DE
		3G3MX2-A2015	AX-RC00440859-DE	-	

① Chokes

Model	Diameter	Description
AX-FER2102-RE	21	For 2.2 KW motors or below
AX-FER2515-RE	25	For 15 KW motors or below
AX-FER5045-RE	50	For 45 KW motors or below

① Output AC reactor

Inverter		AC Reactor
Voltage	Model 3G3MX2-□	Reference
200 VAC	AB001 / AB002 / AB004 A2001 / A2002 / A2004	AX-RAO11500026-DE
	AB007 / A2007	AX-RAO07600042-DE
	AB015 / A2015	AX-RAO04100075-DE
	AB022 / A2022	AX-RAO03000105-DE
	A2037	AX-RAO01830160-DE
	A2055	AX-RAO01150220-DE
	A2075	AX-RAO00950320-DE
	A2110	AX-RAO00630430-DE
	A2150	AX-RAO00490640-DE
400 VAC	A4004 / A4007 / A4015	AX-RAO16300038-DE
	A4022	AX-RAO11800053-DE
	A4030 / A4040	AX-RAO07300080-DE
	A4055	AX-RAO04600110-DE
	A4075	AX-RAO03600160-DE
	A4110	AX-RAO02500220-DE
	A4150	AX-RAO02000320-DE

② Accessories

Types	Model	Description	Functions
Digital operator	AX-OP05-E	LCD remote operator	5 Line LCD remote operator with copy function, cable length max. 3m.
	3G3AX-CAJOP300-EE	Remote operator cable	3 meters cable for connecting remote operator
	3G3AX-OP01	LED remote operator	LED remote operator, cable length max. 3m
	4X-KITMINI	Mounting kit for LED operator	Mounting kit for LED operator on panel
	3G3AX-OP05-H-E	Operator holder	Holder to put the AX-OP05-E inside of the cabinet
Accessories	AX-CUSBM002-E	PC configuration cable	Mini USB to USB connector cable

③ Communication option boards

Types	Model	Description	Functions
Communication options	3G3AX-MX2-PRT	Profibus option card	Used for running or stopping the inverter, setting or referencing parameters, and monitoring output frequency, output current, or similar items through communications with the host controller.
	3G3AX-MX2-DRT	DeviceNet option card	
	3G3AX-MX2-ECT	EtherCAT option card	
	3G3AX-MX2-CRT	CompoNet option card	
	3G3AX-MX2-MRT	MECHATROLINK-II option card	
	3G3AX-MX2-EIP	EtherNet/IP option card	
I/O option	3G3AX-MX2-EIO15-E	Extra input/output option board	1 analog voltage input, 1 analog current input, 1 analog voltage output, 8 discrete logic inputs, 4 discrete logic outputs

④ Braking unit, braking resistor unit

Inverter					Braking resistor unit					
Voltage	Max. motor kW	Inverter 3G3MX2□		Connectable min. resistance Ω	Inverter mounted type (3 %ED, 10 sec max)		Braking torque %	Inverter mounted type (10%ED, 10 sec max)		Braking torque %
		1-phase	3-phase		Type AX-	Resist Ω		Type AX-	Resist Ω	
200 V (Single-/ Three-phase)	0.12	B001	2001	100	REM00K1400-IE	400	200	REM00K1400-IE	400	200
	0.25	B002	2002				180			180
	0.55	B004	2004		REM00K1200-IE	200	180	REM00K1200-IE	200	180
	1.1	B007	2007	50			100	REM00K2070-IE	70	200
	1.5	B015	2015		REM00K2070-IE	70	140	REM00K4075-IE	75	130
	2.2	B022	2022	35			90	REM00K4035-IE	35	180
	4.0	–	2040		REM00K4075-IE	75	50	REM00K6035-IE	35	100
	5.5	–	2055	20	REM00K4035-IE	35	75	REM00K9020-IE	20	150
	7.5	–	2075	17			55	REM01K9017-IE	17	110
	11	–	2110		REM00K6035-IE	35	40	REM02K1017-IE	17	75
	15	–	2150	10	REM00K9017-IE	17	55	REM03K5010-IE	10	95
400 V (Three-phase)	0.55	–	4004	180	REM00K1400-IE	400	200	REM00K1400-IE	400	200
	1.1	–	4007				200			200
	1.5	–	4015		REM00K1200-IE	200	190	REM00K2200-IE	200	190
	2.2	–	4022	100	REM00K2200-IE	200	130	REM00K5120-IE	120	200
	3.0	–	4030		REM00K2120-IE	120	160			160
	4.0	–	4040				120	REM00K6100-IE	100	140
	5.5	–	4055	70	REM00K4075-IE	75	140	REM00K9070-IE	70	150
	7.5	–	4075				100	REM01K9070-IE	70	110
	11	–	4110		REM00K6100-IE	100	50	REM02K1070-IE	70	75
	15	–	4150	35	REM00K9070-IE	70	55	REM03K5035-IE	35	110

⑤ Computer software

Types	Model	Description	Installation
Software	CX-Drive	Computer software	Configuration and monitoring software tool
	CX-One	Computer software	Configuration and monitoring software tool
	€Saver	Computer software	Software tool for Energy Saving calculation

ALL DIMENSIONS SHOWN ARE IN MILLIMETERS.
To convert millimeters into inches, multiply by 0.03937. To convert grams into ounces, multiply by 0.03527.

Cat. No. I113E-EN-05

In the interest of product improvement, specifications are subject to change without notice.

Would you like to know more?

OMRON EUROPE

+31 (0) 23 568 13 00

industrial.omron.eu

omron.me/socialmedia_eu

Sales & Support Offices

Austria
Tel: +43 (0) 2236 377 800
industrial.omron.at

Belgium
Tel: +32 (0) 2 466 24 80
industrial.omron.be

Czech Republic
Tel: +420 234 602 602
industrial.omron.cz

Denmark
Tel: +45 43 44 00 11
industrial.omron.dk

Finland
Tel: +358 (0) 207 464 200
industrial.omron.fi

France
Tel: +33 (0) 1 56 63 70 00
industrial.omron.fr

Germany
Tel: +49 (0) 2173 680 00
industrial.omron.de

Hungary
Tel: +36 1 399 30 50
industrial.omron.hu

Italy
Tel: +39 02 326 81
industrial.omron.it

Netherlands
Tel: +31 (0) 23 568 11 00
industrial.omron.nl

Norway
Tel: +47 (0) 22 65 75 00
industrial.omron.no

Poland
Tel: +48 22 458 66 66
industrial.omron.pl

Portugal
Tel: +351 21 942 94 00
industrial.omron.pt

Russia
Tel: +7 495 648 94 50
industrial.omron.ru

South Africa
Tel: +27 (0)11 579 2600
industrial.omron.co.za

Spain
Tel: +34 902 100 221
industrial.omron.es

Sweden
Tel: +46 (0) 8 632 35 00
industrial.omron.se

Switzerland
Tel: +41 (0) 41 748 13 13
industrial.omron.ch

Turkey
Tel: +90 212 467 30 00
industrial.omron.com.tr

United Kingdom
Tel: +44 (0) 1908 258 258
industrial.omron.co.uk

More Omron representatives
industrial.omron.eu

Although we strive for perfection, Omron Europe BV and/or its subsidiary and affiliated companies do not warrant or make any representations regarding the correctness or completeness of the information described in this document. We reserve the right to make any changes at any time without prior notice.